AWG	American wire gage
BE	Bale
BKDN	Breakdown
BKDWN	Breakdown into
BT	Bottle
BTU	British thermal unit(s)
BX	Box
CC	Cubic centimeter(s)
CFM	Cubic feet per minute
CFS	Cubic feet per second
CI	Cubic inch
CN	Can
CNSWTH	Consolidated with
C/O	Consist of (component of)
CP	Candle power
CRES	Corrosion resistant steel
CW	Continuous wave(s)
DEG	Degree(s)
DR	Drum
EA	Each
FIG	Figure
FMC	Federal manufacturer's code
FT	Foot
GL	Gallon
GPH	Gallons per hour
GR	Gross
HD	Hundred
IN	Inch
INTRCH	Interchangeable with
KC	Kilocycle(s)
KQCA	Kits and quick change assemblies
KT	Kit
KW	Kilowatt(s)
LB	Pound
LH	Left hand
LL	Fifty
MAKEFR	Makefrom
MASTER	Master item
MIN	Minimum
MSUP	Maintenance Supplies
MWO	Modification work order
MX	Thousand
NAS	National aircraft standard
NC	American national coarse thread
NEF	American national extra fine thread
NF	American national fine thread
NHA	Next higher assembly
NS	American national special thread
O/A	Over-all
OBS-AFT-CMPL-W	Obsolete after compliance with
OBS-BY	Obsoleted by
OBSLTS	Obsoletes
PC	Piece
PG	Package
PK	Pack
PL	Pail
PORM	Plus or minus
PRFITM	Preferred item
PT	Pint
REWKTO	Rework to
RH	Right hand
RL	Roll
RMKS	Remarks
RPL-BY	Replaced by
RPLBLE	Replaceable item
RPLS	Replaces
SE	Set
SF	Square foot
SI	Square inch
SL	Spool
SPEC	Specification(s)
ST	Stick
SUB-IS	Substitute is
SUBFOR	Substitute for
TCTM	Time compliance technical manual
TRNSTO	Transfer to
TU	Tube
TYPDSG	Type designation
U/O	Used on
USBLEFF	Usable effectivity
USE-AFT-CMPL-W	Usable after compliance with
U/W	Used with
W	Watt(s)
W	Wide, width
W/	With
WHEN EXHTD RQTN NHA	When exhausted requisition next higher assembly
W/O	Without
XX	Ten

7. Federal Supply Code for Manufacturers.

Code	Manufacturer and location
00502	Adel Division of De Laval Turbine California Inc 10777 Van Owen St Burbank CA 91503
00531	Avionics Corp of America Horsham PA
00624	Aeroquip Corp Aircraft Division Jackson Plant 300 S East Jackson MI 49203
00724	Electronic Communications Inc 1501 N 72nd St Petersburg FL 33733
00736	Air-Maze Division of North American Rockwell Corp Air-Maze Plant 25000 Miles Road Cleveland OH 44128
00779	Amp Inc P O Box 3608 Harrisburg PA
00781	Aircraft Radio Corp Rockaway Valley Road Boonton NJ 07005
00799	Hubbard Instrument Co 4 West Park Road Iowa City IA 52241
01634	Aluminum Co of America 1501 Alcoa Bldg Pittsburgh PA 15219
01843	American Bosch Marketing Division of AMBAC Industries Inc 3664 Main St Springfield MA 01107

Manufacturer and location

Anaconda American Brass Co 128 Robbins St Waterbury CT 06720
Missouri Research Laboratories Inc 2109 Locust St St Louis MO 63103
Spirol Tool Corp 37-27 57th St Woodside NY 11377
15 Nylok Co The Division of United Shoe Machinery Corp 611 Industrial Ave Paramus NJ 07652
02660 Amphenol Corp 2801 S 25th Ave Broadview IL 60153
02860 American Seating Co 901 Broadway Ave NW Grand Rapids MI 49502
02987 Bendix Corp The Flight and Engine Instruments Division South Montrose PA 18843
03101 Drilling Specialties Co P O Box 66 Titusville PA 16354
03481 Goodrich B F Co Aerospace and Defense Products Division Akron OH
03488 Andover Motors Corp Elmira NY
03496 Anemostat Products 888 North Keyser Avenue Scranton PA 18508
03848 Arma Division American Bosch Arma Corp Garden City Long Island NY
04639 Acme Tool and Specialties Co 55 E Bradrock Dr Des Plaines IL 60018
05734 Spartan Hydraulics Inc 20 Clairmont Ave Thornwood NY 10594
06099 Bath John and Co Inc 16 Main St Worcester MA 01602
06275 Allen R C Aircraft Instrument Divisions of Allen R C Business Machines Inc 1130 Race St NE Grand Rapids MI 49503
06731 Lyons Mfg Co Inc 711 East Main Street Lyons KS 67554
07166 Wells Industries Corp Troost Ave at Dehougne P O Box 3067 North Hollywood CA 91606
08273 Apex Machine and Tool Co 2365 Wyandotte Road Willow Grove PA 19090
08484 Breeze Corporations Inc 700 Liberty Ave Union NJ 07083
09292 Ott Bros Machine Co 331 E 37th S Wichita KS
10001 Bureau of Naval Weapons Washington DC
10402 Whelen Engineering Co Inc 3 Winter Ave Deep River CT 06417
11599 Colt Industries Inc Chandler-Evans Control Systems Division Charter Oak Blvd West Hartford CT 06101
11976 Chicago Pneumatic Tool Co 6 East 44th St New York NY 10017
12204 Chrysler Corp 341 Massachusetts Ave Detroit MI 48231
12697 Clarostat Mfg Co Inc Lower Washington St Dover NH 03820
12832 Western Supplies Co 2920 Cass Ave St Louis MO 63106
12834 Meramec Metal Stamping Co 1141 Reco Ave St Louis MO 63126
12839 Stentor Tool and Mfg Co Inc 2106-10 Blair Ave St Louis MO 63106
13020 H and H Tool and Machine Co 19 W Scates Caseyville IL 62232
13027 Aero Corp P O Box 1209 Lake City FL 32055
13033 Southwest Airmotive Co 11215 Natl Bridge Rd P O Box 6006 Lambert Field St Louis MO 63145
[illegible] Louis MO 63134
[illegible] Epic Mfg Co Inc 600 E 95th Kansas City MO 64131
13805 Lawrence Aviation Industries Inc Sheep Pasture Road Port Jefferson Station NY 11776
13829 Commercial Shearing and Stamping Co 1775 Logan Ave Youngstown OH 44505
13887 Hesskamp Machine and Tool Co 2752 Walton Rd St Louis MO
14396 Stenner Brothers Machine Products Inc 405 N Montgall Kansas City MO 64124
14471 Dawco Mfg Co Inc 3800 Pawnee Wichita KS 67215
14473 Fairchild Hiller Corp Aircraft Service Division P O Drawer 58 St Augustine FL 32084
15555 Curtiss-Wright Corp 1 Passaic St Wood-Ridge NJ 07075
15814 Daniels C R Inc Daniels MD 20133
18037 Dixon William Inc Carlstadt NJ 07072
18873 Du Pont E I De Nemours and Co Inc 1007 Market Street Wilmington DE 19898
18876 Army Missile Command Redstone Arsenal AL
18965 Dynamic Air Engineering Inc 620 E Dyer Rd Santa Ana CA 92705
19315 Bendix Corp The Navigation and Control Division Teterboro NJ 07608
19975 Porter H K Co Inc Electrical Division Lynchburgh Works Mayflower Drive Lynchburgh VA 24501
21520 Fansteel Metallurgical Corp Number One Tantalum Place North Chicago IL 60064
22040 Felsenthal Instruments Co 7450 W Wilson Ave Chicago IL 60656
23040 Ford Motor Co Parts and Accessories Operation American Road Dearborn MI 48120
24161 Gates Rubber Co 999 South Broadway Denver Co 80217
24617 General Motors Corp 3044 Grand Blvd W Detroit MI 48202
24981 Gits Bros Mfg Co 1848 S Kilbourn Ave Chicago IL 60623
25472 Goodrich B F Co The 500 South Main St Akron OH 44318
25500 Goodyear Aerospace Corp 1220 Massillon Rd Akron OH 44135
27462 Harrison Radiator Div of General Motors Corp Washburn and Walnut Locknut NY 14094
29666 Huck Mfg Co 2500 Bellevue Ave Detroit MI 48207
30028 Hydro Power Inc Mount Gilead OH
30323 Illinois Tool Works Inc 8501 W Higgins Road Chicago IL 60631
30778 Inland Mfg Div of General Motors Corp 2700 Inland Ave Dayton OH
31435 Lear Siegler Inc Power Equipment Division P O Box 6719 Cleveland OH 44101
33525 Kidde Walter and Co Inc Belleville NJ
35510 Leece-Neville Co 1374 E 51st St Cleveland OH 44103
35918 Lewis Engineering Co The 550 Spring St Naugatuck CT 06770

Code	Manufacturer and location
36090	Librascope Group of General Precision Systems Inc 808 Western Ave Glendale CA 91201
36540	Lisle Corp 805 E Main Clarinda IA 51632
37942	Mallory P R and Co Inc 3029 East Washington St Indianapolis IN 46206
38050	Dresser Industries and Moore Division of Dresser Industries Inc Instrument Division Stratford CT
38443	Marlin-Rockwell CC Division TRW Inc 402 Chandler St Jamestown NY 14701
43334	New Departure-Hyatt Bearings Division General Motors Corp Hayes Ave Sandusky OH 44870
43991	Norma-Hoffman Bearings Corp Hamilton Ave Stamford CT 06904
43999	North American Rockwell Corp Los Angeles Div International Airport Los Angeles CA 90009
45225	Owatonna Tool Co 655 Eisenhower Place Owatonna MN 55060
45402	Pacific Scientific Co 1346 S State College Blvd Anaheim CA 92803
45681	Parker-Hannifin Corp 17325 Enclid Ave Cleveland OH 44112
47695	Pittsburg Plate Glass Co Pittsburgh PA
49944	Raybestos-Manhatten Inc Passaic NJ
49956	Raytheon Co Lexington MA 02173
50599	Resistoflex Corp Woodland Road Roseland NJ 07068
50941	Rinck Mc Ilwaine Inc 16 Hudson New York NY 10013
53750	Seaboard Electronic Corp 200 Henry St Stamford CT 06902
54835	Sikes Co Division of Milwaukee Chair Co 3022 W Center Milwaukee WI 53245
55719	Snap-On Tools Corp 8049 28th Ave Kenosha WI 53140
56232	Sperry Gyroscope Division of Sperry Rand Corps Marcus Ave and Lakeville Great Neck NY 11020
56289	Sprague Electric Co Marshall St North Adams MA 01247
56878	Standard Pressed Steel Co P O Box 796 Jenkintown PA 19046
58588	Surface Combustion Div of Midland-Ross Corp Toledo OH
59234	Taylor Bros Co 3350 Superior Avenue Cleveland OH 44114
59874	Thomson National Press Co Inc Dean Ave Franklin MA
59875	TWR Mechanical Products Division 23555 Euclid Ave Cleveland OH 44117
60038	Timken Roller Bearing Co 1835 Dueber Ave SW Canton OH 44706
60380	Torrington Co The 59 Field Torrington CT 06790
60995	Tubing Seal Cap Co 601 S Vincent Azusa CA 91702
61349	Ametek Inc United States Gauge Division Sellersville PA 18960
61864	United-Carr Inc Suite 4600 Prudential Center Boston MA 02199
62278	Universal Table Top Co Inc 1100 Pkwy Ave Brooklyn NY
62983	Vickers Division of Sperry Rand Corp P O Box 302 Troy MI 48084
64560	Weldon Tool Co 3000 Woodhill Rd Cleveland OH 44104
65415	Whitney Baxter D and Son Inc P O Box 3428 Greensboro NC 27402
66640	Wright Aeronautical Division of Curtiss-Wright Corp Passaic and S Main Streets Wood-Ridge NJ 07095
70040	AC Spark Plug Div of General Motors Corp 1300 N Dort Hgwy Flint MI 48556
70138	Aero-Corry Division of Aero-Flow Dynamics Inc 611 West Main St Corry PA 16407
70152	Universal Oil Products Co UOP Instruments Division P O Box 2001 Greenwich CT 06830
70210	Airesearch Mfg Co 9851 Supulveda Blvd Los Angeles CA 90009
70214	Airpath Instrument Co 13150 Gist Rd Bridgeton MO 63042
70236	Tactair Fluid Controls Corp 416 Church Rd Bridgeport PA 19405
70255	Alco Controls Corp P O Box 12700 St Louis MO 63141
70276	Allen Mfg Co Box 570 Hartford CT 06101
70413	Anti-Friction Bearing Mfg Association Inc The 60 E 42nd New York NY 10017
70843	Ball Brothers Inc Muncie IN
70898	Beech Aircraft Corp 9709E Central Wichita KS 67201
71087	Boots Aircraft Nut Division Townsend Co Newton Turnpike Norwalk CT 06851
71102	Boston Insulated Wire and Cable Co 65 Bay Boston MA 02125
71286	Camloc Fastener Corp 22 Spring Valley Rd Paramus NJ 07652
71450	Cts Corp 1142 W Beardsley Ave Elkhart IN 46514
71468	ITT Cannon Electric Inc 3208 Humbolt St Los Angeles CA 90031
71590	Globe-Union Inc Centralab Division P O Box 591 Milwaukee WI 53201
71643	Connecticut Hard Rubber Co 407 East St New Haven CT 06509
71688	Cook Electric Co 6401 Oakton Morton Grove IL 60053
72071	Illinois Tool Works Inc Eclipse Counterbore Division 1600 Bonner Ave Ferndale MI 48220
72560	Delco Products Div of General Motors Corp 329 E 1st Dayton OH 45401
72600	Dura Corp 21800 Greenfield Road Oak Park MI 48237
72794	Dzus Fastener Co Inc 425 Union Blvd West Islip NY 11795
72818	Glidden Co The Union Commerce Bldg 925 Euclid Ave Cleveland OH 44114
72882	Grand Rapids Metalcraft Division of Jacobs F L Co 22 Commerce Ave SW Grand Rapids MI 49502
72914	Grimes Mfg Co 515 Russell Urbana OH 43078
72962	Elastic Stop Nut Corp of America 2330 Vauxhall Road Union NJ 07083
73168	Fenwal Inc 400 Main St Ashland MA 01721
73197	Hi-Shear Corp 2600 W 247th Torrance CA 90509
73680	Garlock Inc Palmyra NY 14522
73760	ITT General Controls Inc 801 Allen Ave Glendale CA 91201

Code	Manufacturer and location
73842	Goodyear Tire and Rubber Co 1144 E Market Akron OH 44316
73907	Grimes Bradley E Co Mt Ephraim NJ
74063	Hartman Electrical Mfg Co P O Box 8 Mansfield OH 44901
74080	Hayes Industries Inc Wildwood Ave Jackson MI
74144	Cam Stat 11833 West Olympic Blvd Los Angeles CA 90064
75037	Minnesota Mining and Mfg Co Electro Products Division 3M Center St Paul MN 55101
75042	I R C Division of TRW Inc 401 North Broad St Philadelphia PA 19108
75165	Johns-Manville Corp 22 E 40 New York NY 10016
75183	Johnson Rubber Co The 16025 Johnson St Middlefield OH 44062
75237	Kaynar Mfg Co P O Box 3001 Fullerton CA 92634
75361	Koehler-Dayton Inc 401 Leo Street Dayton OH 45404
75477	Joy Mfg Co 338 S Broadway New Philadelphia OH 44663
75511	Ametek Inc Lamb Electric Co Division 627 Lake St Kent OH 44240
75829	Libby-Owens-Ford Glass Co 881 Madison Ave Toledo OH 43624
75915	Littlefuse Inc 800 E Northwest Hwy Des Plains IL 60016
76005	Lord Mfg Co 1635 W 12th Erie PA 16512
76260	Mechanics Universal Joint Division of Borg-Warner Corp 2020 Harrison Ave Rockford IL 61101
76301	McDonnell Douglas Corp McDonnell Co P O Box 516 Lambert-St Louis Municipal Airport St Louis MO 63166
76530	Cinch-Monadnock Division of United-Carr Inc City of Industry CA
76700	Nelson Muffler Corp P O Box 189 Stoughton WI 53589
76786	North and Judd Mfg Co 500 East Main New Britain CT 06050
76912	Oro Mfg Co Stitt St and Bivens Road P O Box 479 Monroe NC 28110
77045	Sunbeam Electronics Division John Oster Mfg Co 1400 Commercial Blvd P O Box 23040 Fort Lauderdale FL 33307
77068	Bendix Corp The Electrodynamics Division 11600 Sherman Way North Hollywood CA 91605
77147	Patton Macguyer Co Edgewood Station Providence RI 02905
77200	Pesco Products Division of Borg-Warner Corp 24700 North Miles Road Bedford OH 44104
77220	Perfect Circle Division of Dana Corp 552 S Wash St Hagerstown IN 47346
77221	Phaostron Instrument and Electronic Co 151 Pasadena Ave South Pasadena CA 91030
77252	Boeing Co The Vertol Division Boeing Center P O Box 16858 Philadelphia PA 19142
77820	Bendix Corp The Electrical Components Division Sherman Ave Sidney NY 13838
77896	Shafer Bearing Division of Rex Chainbelt Inc Belmont Road at Curtiss St Downers Grove IL 60515
77932	Simmonds Precision Products Inc 105 Martling Ave Tarrytown NY 10592
78189	Illinois Tool Works Inc Shakeproof Division St Charles Road Elgin IL 60126
78286	United Aircraft Corp Sikorsky Aircraft Division N Main St Stratford CT 06497
78553	Tinnerman Products Inc 8700 Brook Park Rd Cleveland OH 44129
78570	Titeflex Inc Springfield MA
78786	Towle Mfg Co 260 Merrimac Newburyport MA
78943	United Aircraft Products Inc 1116 W Stewart St Dayton OH 45408
79004	Union Spring and Mfg Co 2nd Ave and 8th Street New Kensington PA 15068
79136	Waldes Kohinoor Inc 47-16 Austel Place Long Island City NY 11101
79150	Dana Corp Victor Division P O Box 1333 Chicago IL 60690
79300	Waltham Precision Instruments Inc Waltham Division 221 Crescent St Waltham MA 02154
79318	Whittaker Corporation Technical Products Division 9651 Canoga Ave Chatsworth CA 91311
79500	Westinghouse Electric Corp 3 Gateway Center P O Box 2278 Pittsburgh PA 15230
79550	Whitaker Cable Corp 1301 Burlington North Kansas City MO 64116
79555	White S S Co 211-17 S 12th St Philadelphia PA 19107
80020	Naval Air Engineering Laboratory Philadelphia PA 19112
80049	Department of the Air Force Washington DC
80064	Naval Ship Systems Command Washington DC 20360
80205	National Aerospace Standards Committee Aeronautical Industries Association of America Washington DC
80477	Adams Rite Mfg Co 540 W Chevy Chase Dr Glendale CA 91204
80510	Allen R C Business Machines Inc 678 Front Ave NW Grand Rapids MI 49504
80539	Standard Pressed Steel Co 2701 South Harbor Blvd Santa Ana CA 92702
80648	Torrington Co The South Bend IN
80756	Ramsey Corp Manchester-Weidman St Louis MO
81039	Plessey Airborne Corp 1414 Chestnut Ave Hillside NJ 07205
81321	Purolator Products Inc 970 New Brunswick Ave Rahway NJ 07065
81348	Federal Specifications Promulgated by General Services Administration
81349	Military Specifications Promulgated by Standardization Div Directorate of Logistic Services DSA
81350	Joint Army-Navy Specifications Promulgated by Standardization DIV Directorate of Logistic Services DSA
81352	Air Force-Navy Aeronautical Specifications Promulgated by Aeronautical Standards Group

Code	Manufacturer and location
81640	Controls Co of America Control Switch Division 1420 Delmar Drive Folcroft PA 19032
81864	Nosco Plastics Div of National Organ Supply Co Erie PA
81923	Army Medical Service
81983	Lisk G W Co South St Clifton Spring NY 14432
81996	Army Aviation Systems Command St Louis MO 63166
82271	Waterman Hydraulics Corp 3737 Chase Ave Skokie IL 60076
82833	Hansen-Lynn Co Inc 800 So Flower St Burbank CA 91502
83014	Hartwell Corp 9035 Venice Blvd Los Angeles CA 90034
83144	Automation Industries Inc Industrial Products Group Division 81 Flexible Tubing Division New Whitfield St Guilford CT 06437
83266	Claronex Products Inc 239 Java St Brooklyn NY 11222
83298	Bendix Corp The Electric Power Division M/S Route 35 Eatontown NJ 07724
83324	Rosan Inc 2901 W Coast Highway Newport Beach CA 92663
83843	Westinghouse Electric Corp Aerospace Electrical Division P O Box 989 Lima OH 45802
83930	Adel Products Division of De Laval Turbine California Inc 1444 Washington Ave Huntington WV 25704
84256	Avdel Inc 212 S Victory Blvd Burbank CA 91503
84639	Honold Ludwig Mfg Co Chester Pike and Folcraft Ave Folcraft PA 19032
84685	Hydra-power Corp Division of Teledyne Inc 310 Main St New Rochelle NY 10801
85812	Nasco International Inc 6405 N W 36th St P O Box 515 Miami Fl 33148
86009	Olschan Electrical Supply Co Inc 787 Main Bridgeport CT
86263	Cook R F Mfg Co 2732 2nd Cuyahoga Falls OH 44221
86577	Precision Metal Products of Malden Inc 41 Elm Street Stoneham MA 02180
86579	Precision Rubber Products Corp 3110 Oakridge Drive Dayton OH 45417
86768	Republic Mfg Co 15655 Brookpark Road Cleveland OH 44135
86794	Roe Justus and Sons 215 River Ave Patchogue NY
86761	Shell Chemical Co 50 W 50th New York NY 10020
87065	Marvel Mfg Co The 204 Passaic Ave Fairfield NJ 07006
87187	Krylon Inc 2-16 Ford St Norristown PA 19401
87641	Sweeney B K Mfg Co 6300 Stapleton South Drive Denver CO 80216
87915	Titan Pump and Engineering Corp 43606 Grand River Ave Novi MI 48050
87991	Atomic Energy Commission Albuquerque Operations Office Albuquerque NM
88042	Army Air Force Drawings Under Custodianship of the Air Force
88044	Aeronautical Standards Group Dept of Navy and Air Force
88340	American Pullmax Co Inc 2463 N Sheffield Chicago IL 60614
88818	Kearfott Group Kearfott Products Division General Systems Inc 1150 McBride Ave Little Falls NJ 07424
89513	Janitrol Aero Division of Midland-Ross Corp 4200 Surface Columbus OH 43204
89715	Blue M Electric Co 138th and Catham Blue Island 60406
89944	Kollsman Instrument Corp 575 Underhill Blvd Syosset NY 11791
90005	Bendix Corp The Filter Division 434 West Twelve Mile Rd Madison Heights MI 48071
90166	New York Air Brake Co Watertown Division Starbuck Ave Watertown NY 13601
90299	Chicago Pneumatic Tool Co Utica NY 13503
90484	ITT Wire and Cable Division 172 Sterling Street Clinton MA 01510
90947	Sturdevant Mfg Corp 14351 Ilene Detroit MI 48238
91547	Avco/Lycoming Division Stratford Plant 550 S Main St Stratford CT 06497
91767	Heli-Coil Corp Shelter Rock Lane Danbury CT 06813
91929	Honeywell Inc Building Controls and Components Group Micro Switch Division Chicago and Spring Streets Freeport IL 61032
92003	Parker Aircraft Co Los Angeles CA
92026	Platt Arthur I and Co 26 Coolidge CT Fairfield CT 06432
92144	Steelcraft Boats Inc West Haven CT
93037	Progressive Service Co 2720 Clark Ave St Louis MO 63103
93460	White S S Co Prince Bay Staten Island NY 10309
94135	Naval Ordnance Standards
94581	National Utilities Corp 135 East Railroad Ave Monrovia CA 91016
94614	Atkins and Pearce Mfg Co 510 Eggleston Ave Cincinnati OH
94640	Henry Engineering Co P O Box 229 3625 W Pacific Ave Burbank CA 91503
96452	American-Standard Controls Division of American Radiator and Standard Sanitary Corp 5900 Trumbull Ave Detroit MI 48208
96603	Eastern Rotorcraft Corp Box 110 Doyletown PA
96772	Peerless Machine Co 10620 Dolores Los Angeles CA
96906	Military Standards Promulgated by Standardization Div Directorate of Logistic Services DSA
97424	General Electric Co Aerospace Electrical Equipment Dept 40 Federal St West Lynn MA 01905
97484	Technical Development Co 305 S Chester Pike Glenolden PA 19036
97485	Avien Inc 58-15 Northern Blvd Woodside NY 11377
98313	Davis Aircraft Products Inc Scudder and Woodbine Avenues Northport NY 11768
98425	Applied Design Co Inc 2465 Sheridan Drive Tonawanda NY 14150

Code	Manufacturer and location
98505	Hydra Electric 3151 Kenwood St Burbank CA 91503
98524	California Division National Screw and Mfg Co 3423 S Garfield Los Angeles CA 90022
98625	Aeroquip Corp Marman Division 11214 Exposition Blvd Los Angeles CA 90064
98708	Talley Industries Rocket Power Operations Falcon Field Mesa AZ 85201
98745	Middletown Air Materiel Area Olmsted Air Force Base PA
99057	Kelox Industries 161 Prescott St East Boston MA 02128
99171	Snell Foster D Inc 29 W 15th St New York NY 10011
99215	Ronson Hydraulic Units Corp 530 Sugar Creek Rd Charlotte NC 28206
99251	Bendix Corp The Instruments and Life Support Division 2734 Hickory Grove Road Davenport IA 52804
99321	Shaw Aero Devices Inc Drawer V East Hampton NY 11937
99551	Bendix Corp the Fluid Power Division 211 Seward Ave Utica NY 13502
99643	Sterer Engineering and Mfg Co 4690 Colorado Blvd Los Angeles CA 90039
99879	Aeroquip Corp Aircraft Division Elbeeco Plant 1130 Maynard Rd Jackson MI

8. Recommendations for Maintenance Publications Improvements.

Report of errors, omissions, and recommendations for improving this publication by the individual user is encouraged. Reports should be submitted on DA Form 2028 (Recommended Changes to DA Publcations) and forwarded direct to the Commanding General, U.S. Army Aviation Systems Command, ATTN: AMSAV-R-MLRA, P.O. Box 209, St. Louis, MO 63166.

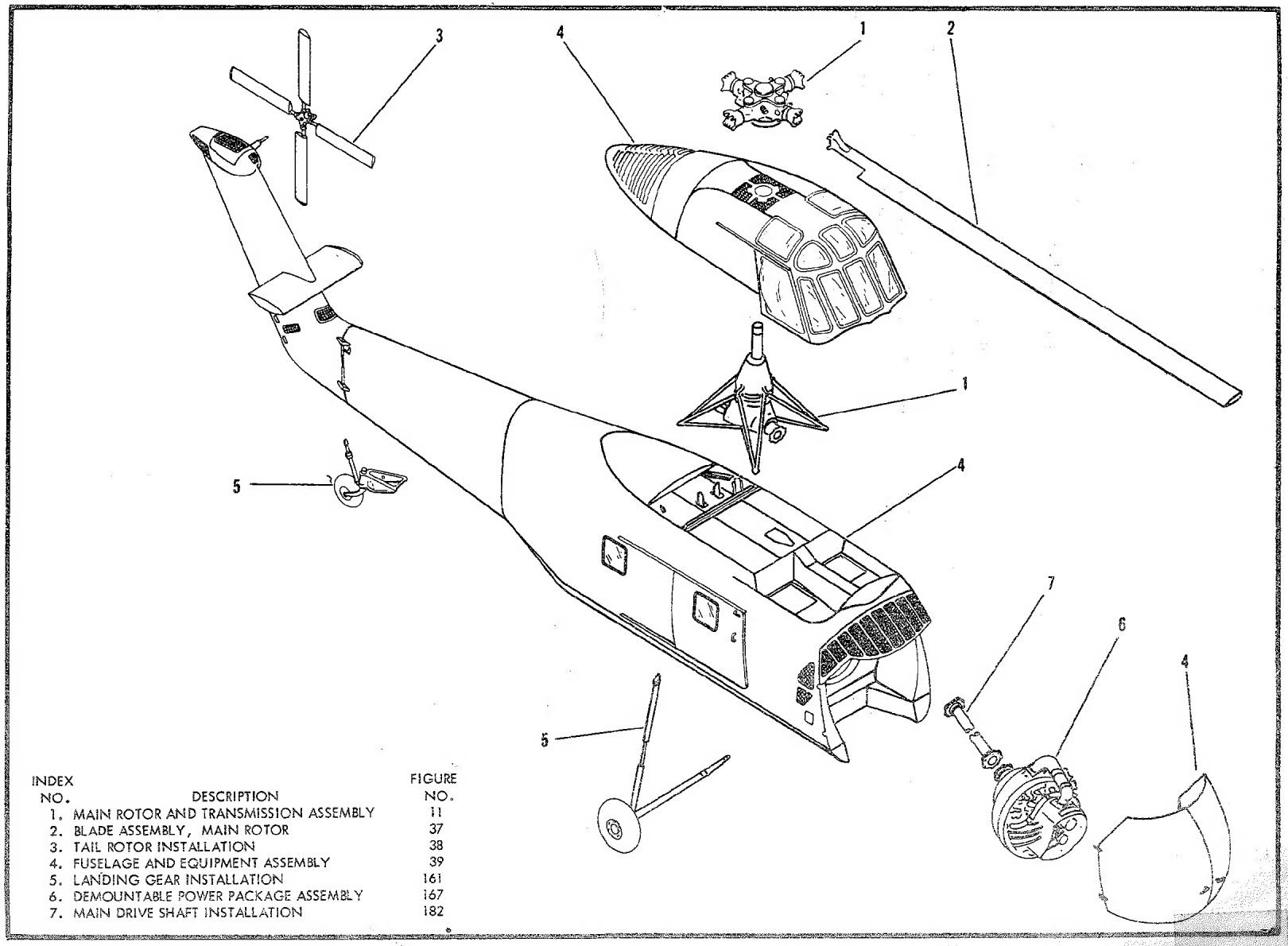

INDEX NO.	DESCRIPTION	FIGURE NO.
1.	MAIN ROTOR AND TRANSMISSION ASSEMBLY	11
2.	BLADE ASSEMBLY, MAIN ROTOR	37
3.	TAIL ROTOR INSTALLATION	38
4.	FUSELAGE AND EQUIPMENT ASSEMBLY	39
5.	LANDING GEAR INSTALLATION	161
6.	DEMOUNTABLE POWER PACKAGE ASSEMBLY	167
7.	MAIN DRIVE SHAFT INSTALLATION	182

Figure 1. Exploded View of Complete Helicopter

SECTION II

ILLUSTRATED GROUP ASSEMBLY PARTS LIST

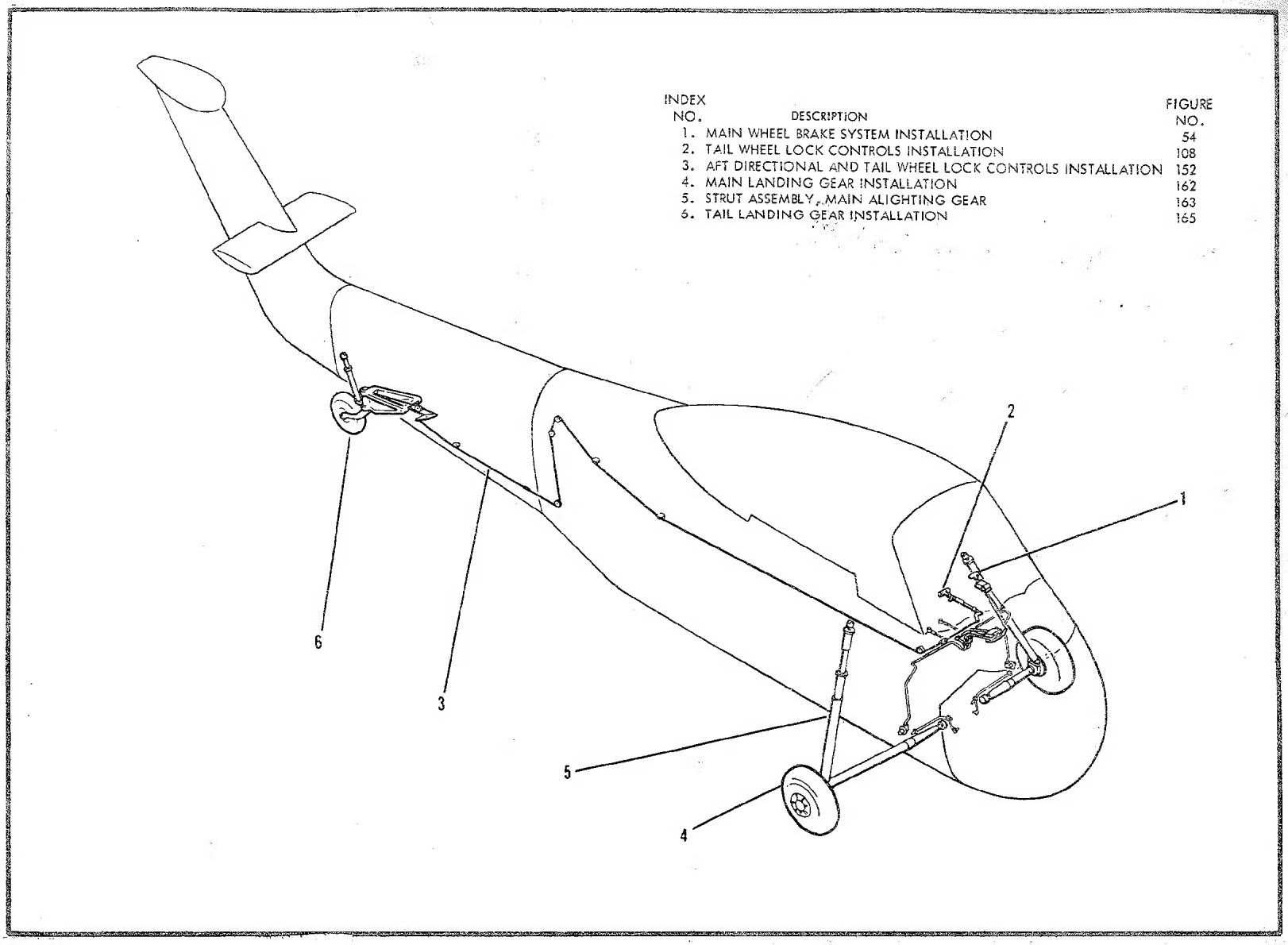

INDEX NO.	DESCRIPTION	FIGURE NO.
1.	MAIN WHEEL BRAKE SYSTEM INSTALLATION	54
2.	TAIL WHEEL LOCK CONTROLS INSTALLATION	108
3.	AFT DIRECTIONAL AND TAIL WHEEL LOCK CONTROLS INSTALLATION	152
4.	MAIN LANDING GEAR INSTALLATION	162
5.	STRUT ASSEMBLY, MAIN ALIGHTING GEAR	163
6.	TAIL LANDING GEAR INSTALLATION	165

Figure 2. Landing Gear System

3

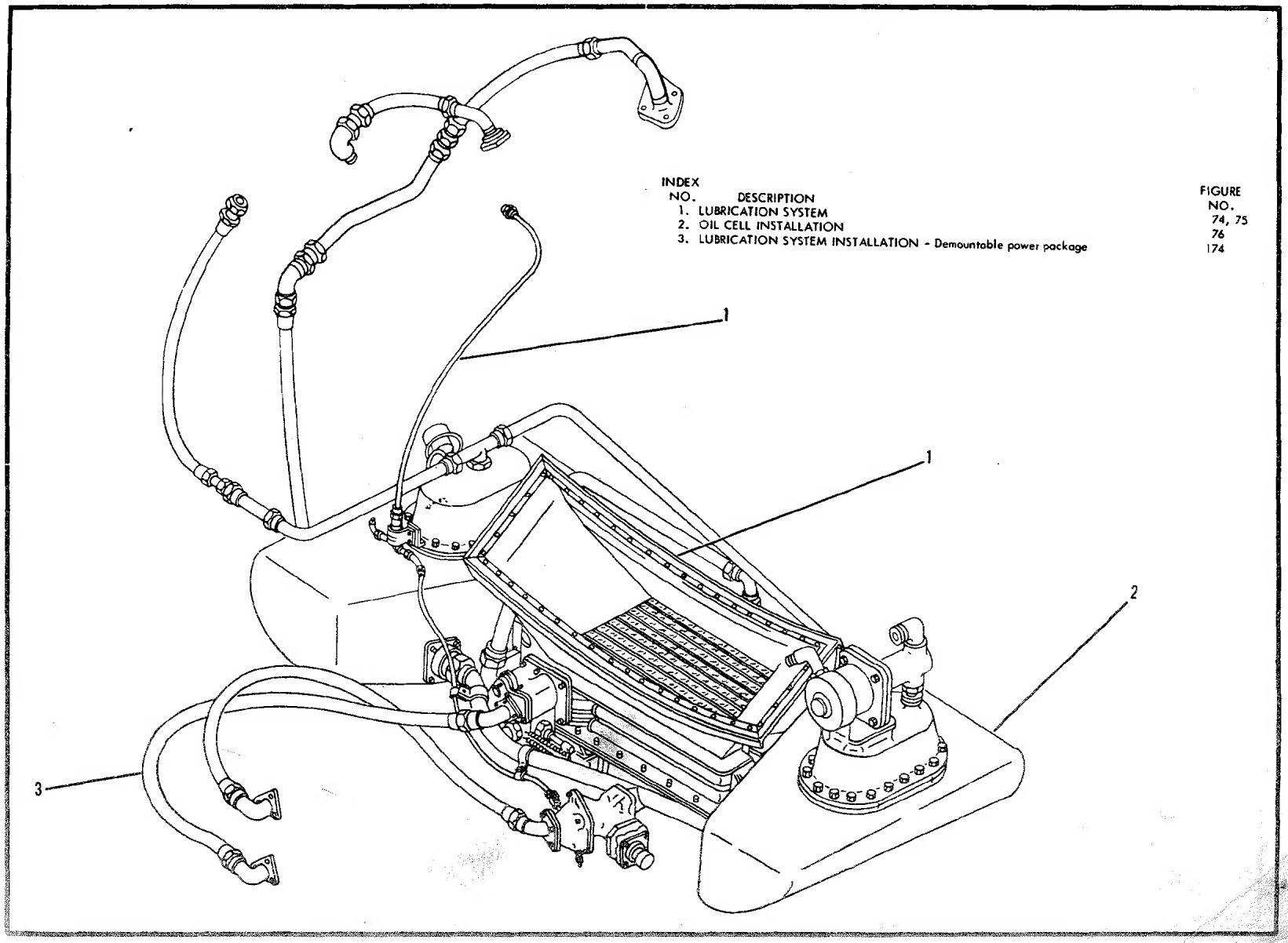

3

Figure 3. Lubrication System

4

INDEX NO.	DESCRIPTION	FIGURE NO.
1.	FUEL SYSTEM INSTALLATION	77
2.	VALVE AND STRAINER ASSEMBLY	78
3.	FORWARD SELF-SEALING FUEL CELL INSTALLATION	79
4.	CENTER PLIOCEL FUEL CELL INSTALLATION	80
5.	AFT PLIOCEL FUEL CELL INSTALLATION	81
6.	FUEL SYSTEM INSTALLATION - Demountable power package	173

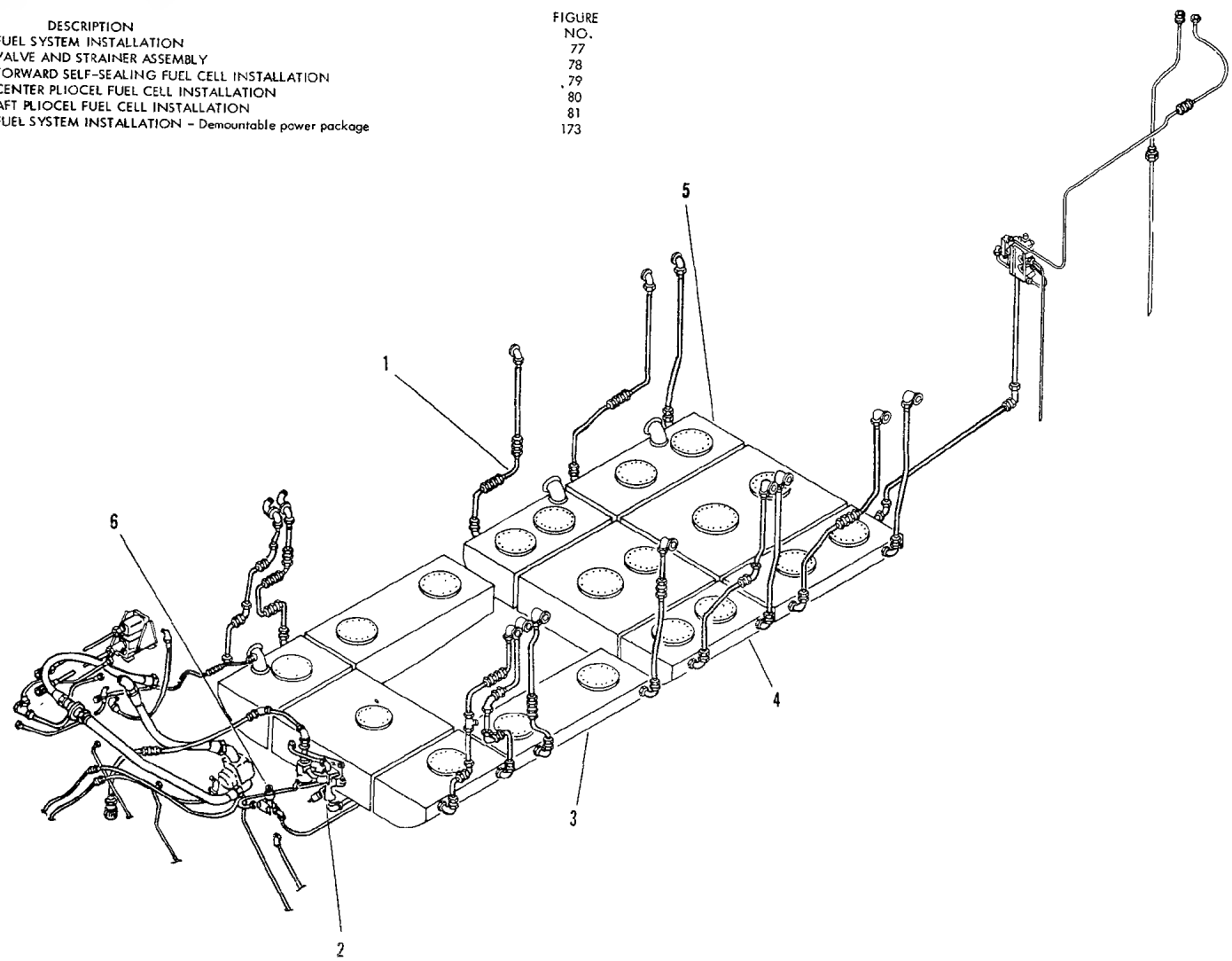

4

Figure 4. Fuel System

5

INDEX NO.	DESCRIPTION	FIGURE NO.
1.	FUEL SELECTOR VALVE CONTROL INSTALLATION	57
2.	MIXTURE AND SELECTOR VALVE CONTROLS PULLEY INSTALLATION	59,60,61
3.	ARM ASSEMBLY - Throttle Control	65
4.	THROTTLE CONTROL PULLEY BRACKET ASSEMBLY	66
5.	THROTTLE CONTROL PULLEY BRACKET INSTALLATION	67
6.	THROTTLE CONTROL TORQUE TUBE INSTALLATION	72,73
7.	DEMOUNTABLE POWER PACKAGE CONTROLS INSTALLATION	168,169

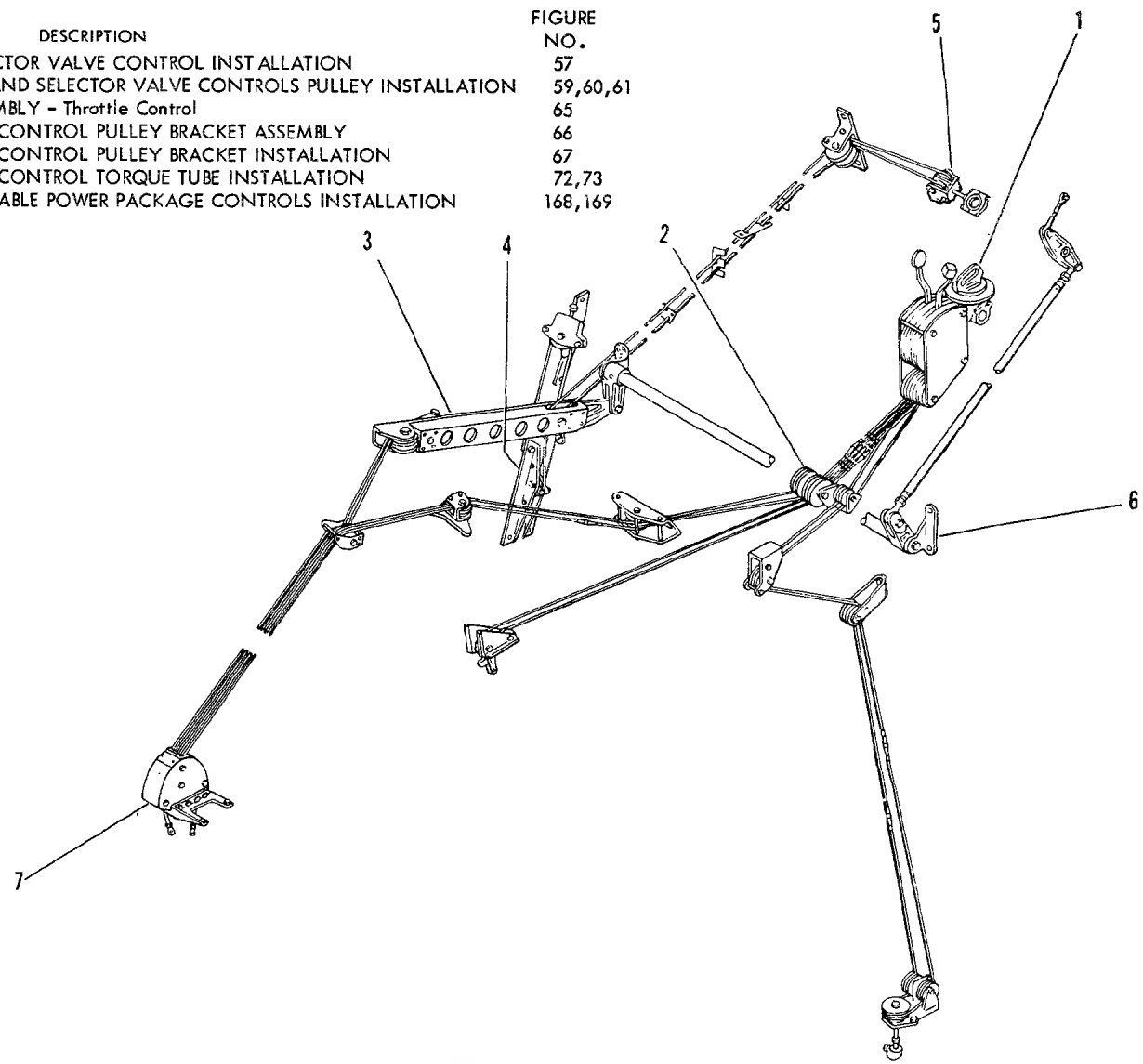

5

Figure 5. Engine Controls System

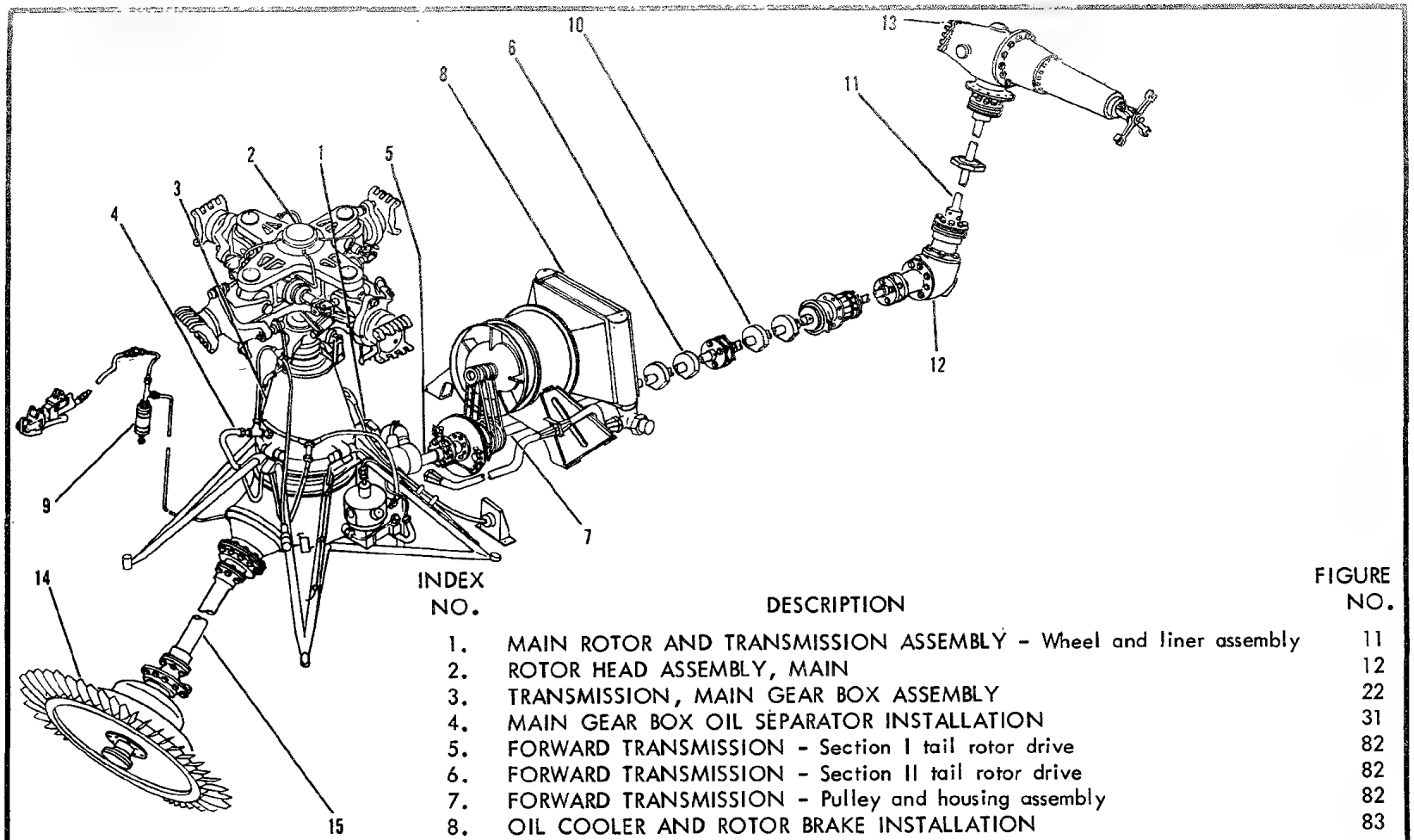

INDEX NO.	DESCRIPTION	FIGURE NO.
1.	MAIN ROTOR AND TRANSMISSION ASSEMBLY - Wheel and liner assembly	11
2.	ROTOR HEAD ASSEMBLY, MAIN	12
3.	TRANSMISSION, MAIN GEAR BOX ASSEMBLY	22
4.	MAIN GEAR BOX OIL SEPARATOR INSTALLATION	31
5.	FORWARD TRANSMISSION - Section I tail rotor drive	82
6.	FORWARD TRANSMISSION - Section II tail rotor drive	82
7.	FORWARD TRANSMISSION - Pulley and housing assembly	82
8.	OIL COOLER AND ROTOR BRAKE INSTALLATION	83
9.	ROTOR BRAKE HYDRAULIC LINES INSTALLATION	85
10.	AFT TRANSMISSION INSTALLATION - Section III tail rotor drive	151
11.	PYLON TRANSMISSION INSTALLATION	155
12.	GEAR BOX ASSEMBLY, INTERMEDIATE	157
13.	GEAR BOX ASSEMBLY - Tail Rotor	158
14.	CLUTCH, FAN ASSEMBLY, TRANSMISSION SYSTEM	177
15.	MAIN DRIVE SHAFT INSTALLATION	182

Figure 6. Transmission System

INDEX NO.	DESCRIPTION	FIGURE NO.
1.	AZIMUTH CONTROLS INSTALLATION - Pilots stick assembly	87
2.	AZIMUTH CONTROLS INSTALLATION - Copilots stick assembly	87
3.	SOCKET AND YOKE INSTALLATION	88
4.	FORCE GRADIENT INSTALLATION	90
5.	MIXER AND SERVO INSTALLATION	91
6.	MAIN ROTOR SERVO CONTROLS INSTALLATION	98, 99
7.	FORWARD DIRECTIONAL CONTROLS INSTALLATION - Quadrant	101
8.	ADJUSTER INSTALLATION	102

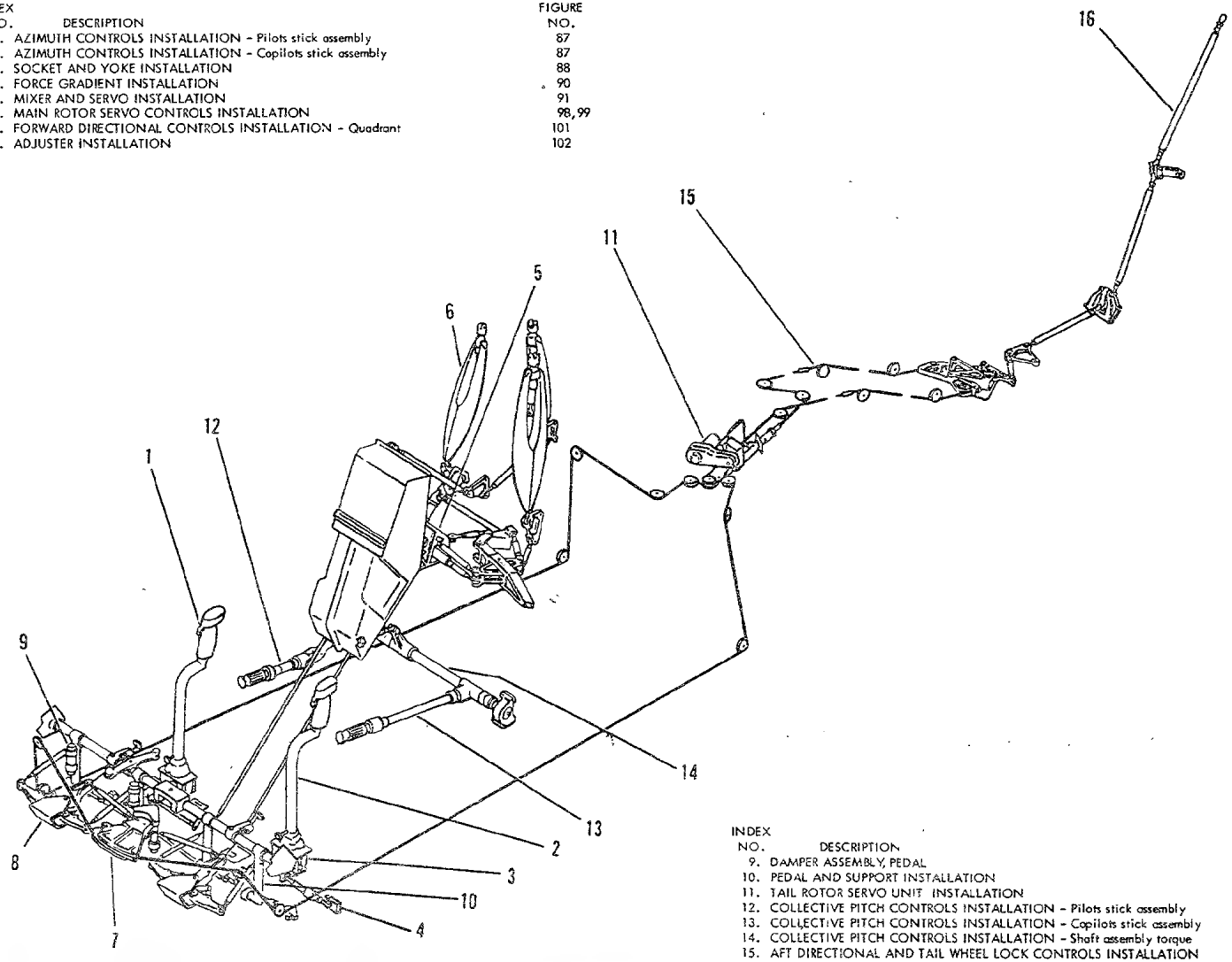

INDEX NO.	DESCRIPTION	FIGURE NO.
9.	DAMPER ASSEMBLY, PEDAL	103
10.	PEDAL AND SUPPORT INSTALLATION	104
11.	TAIL ROTOR SERVO UNIT INSTALLATION	105
12.	COLLECTIVE PITCH CONTROLS INSTALLATION - Pilots stick assembly	107
13.	COLLECTIVE PITCH CONTROLS INSTALLATION - Copilots stick assembly	107
14.	COLLECTIVE PITCH CONTROLS INSTALLATION - Shaft assembly torque	107
15.	AFT DIRECTIONAL AND TAIL WHEEL LOCK CONTROLS INSTALLATION	152
16.	PYLON DIRECTIONAL CONTROLS INSTALLATION	159

Figure 7. Flight Controls System

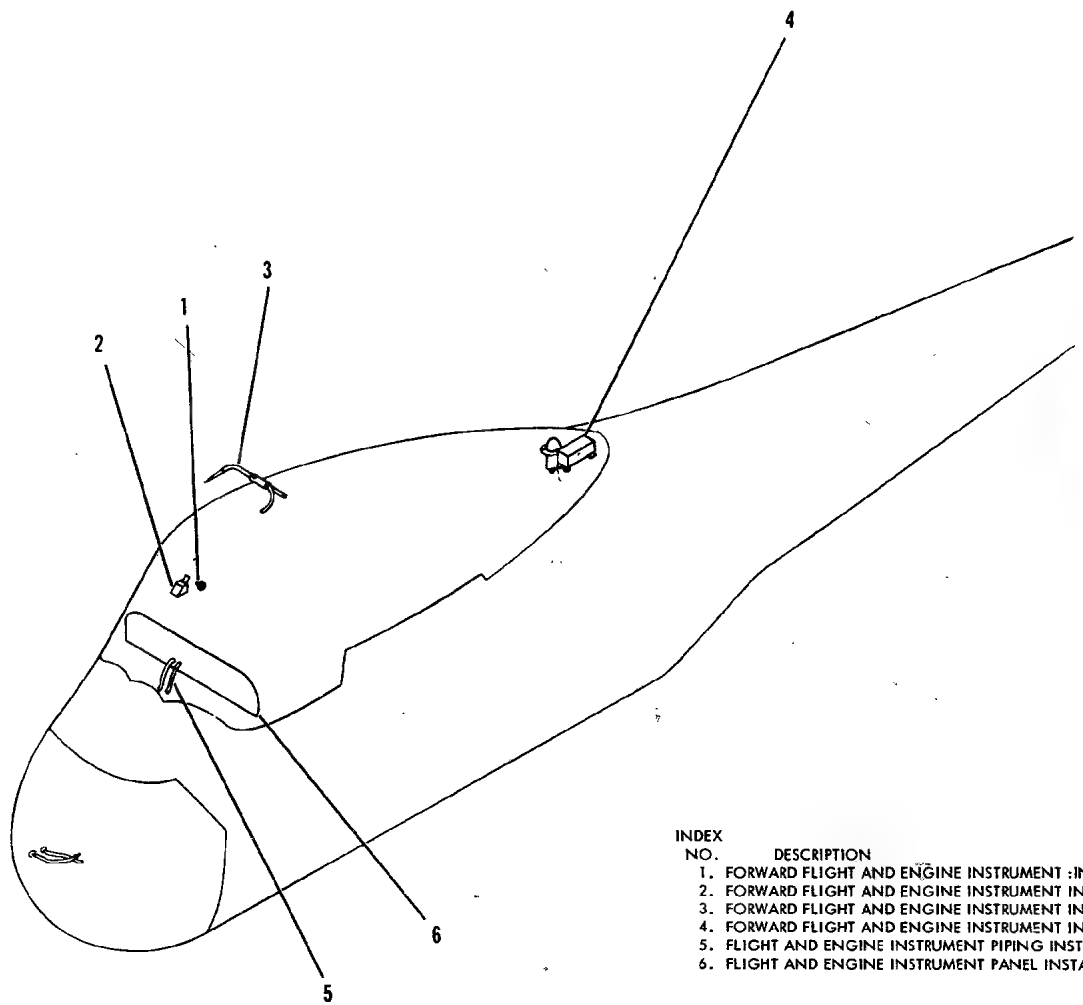

INDEX NO.	DESCRIPTION	FIGURE NO.
1.	FORWARD FLIGHT AND ENGINE INSTRUMENT :INSTALLATION - Thermometer	109
2.	FORWARD FLIGHT AND ENGINE INSTRUMENT INSTALLATION - Compass	109
3.	FORWARD FLIGHT AND ENGINE INSTRUMENT INSTALLATION - Pitot tube	109
4.	FORWARD FLIGHT AND ENGINE INSTRUMENT INSTALLATION - Gyro and amplifier	109
5.	FLIGHT AND ENGINE INSTRUMENT PIPING INSTALLATION	110, 111
6.	FLIGHT AND ENGINE INSTRUMENT PANEL INSTALLATION	112

Figure 8. Instrument System

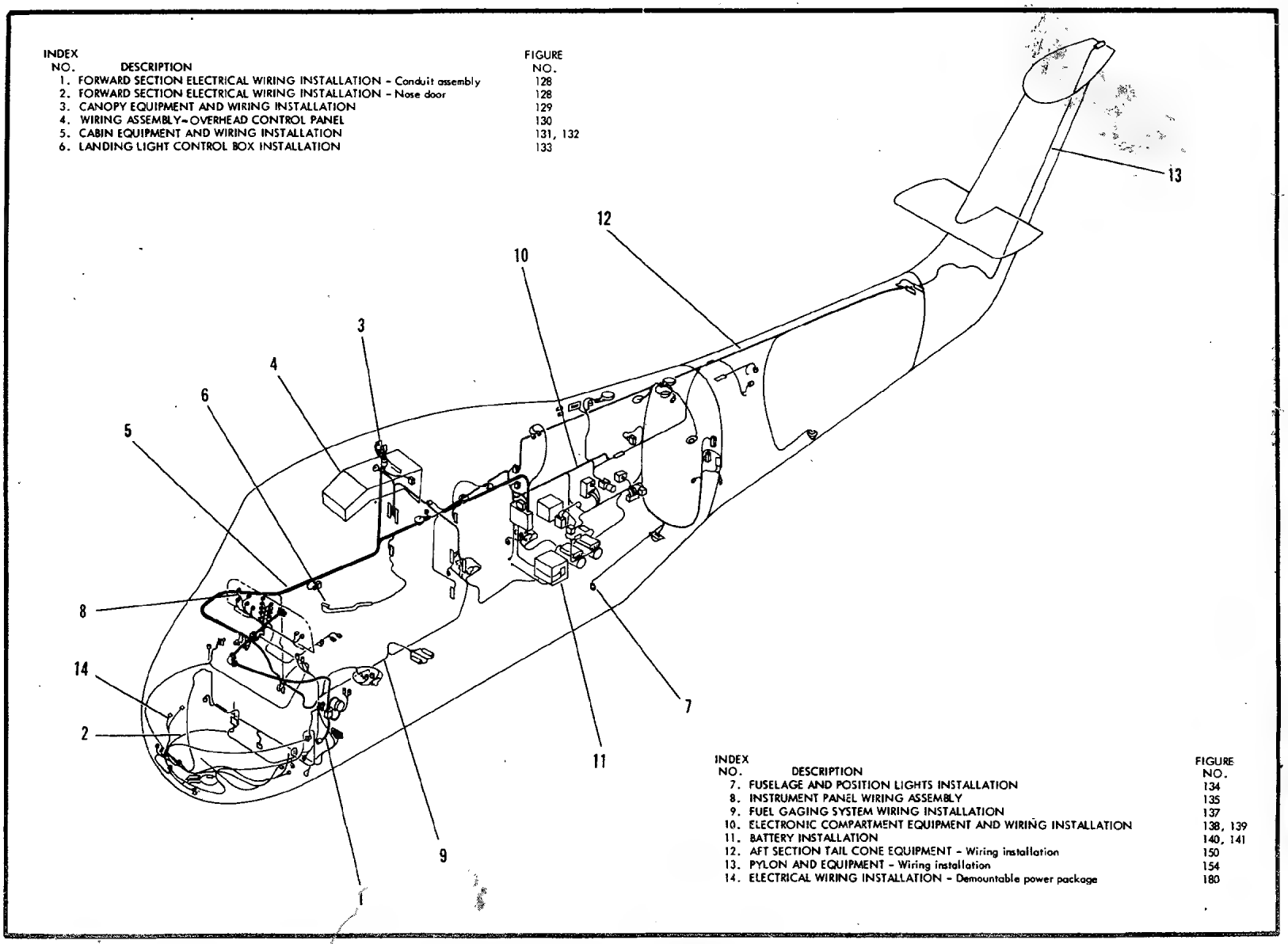

INDEX NO.	DESCRIPTION	FIGURE NO.
1.	FORWARD SECTION ELECTRICAL WIRING INSTALLATION - Conduit assembly	128
2.	FORWARD SECTION ELECTRICAL WIRING INSTALLATION - Nose door	128
3.	CANOPY EQUIPMENT AND WIRING INSTALLATION	129
4.	WIRING ASSEMBLY-OVERHEAD CONTROL PANEL	130
5.	CABIN EQUIPMENT AND WIRING INSTALLATION	131, 132
6.	LANDING LIGHT CONTROL BOX INSTALLATION	133

INDEX NO.	DESCRIPTION	FIGURE NO.
7.	FUSELAGE AND POSITION LIGHTS INSTALLATION	134
8.	INSTRUMENT PANEL WIRING ASSEMBLY	135
9.	FUEL GAGING SYSTEM WIRING INSTALLATION	137
10.	ELECTRONIC COMPARTMENT EQUIPMENT AND WIRING INSTALLATION	138, 139
11.	BATTERY INSTALLATION	140, 141
12.	AFT SECTION TAIL CONE EQUIPMENT - Wiring installation	150
13.	PYLON AND EQUIPMENT - Wiring installation	154
14.	ELECTRICAL WIRING INSTALLATION - Demountable power package	180

Figure 9. Electrical System

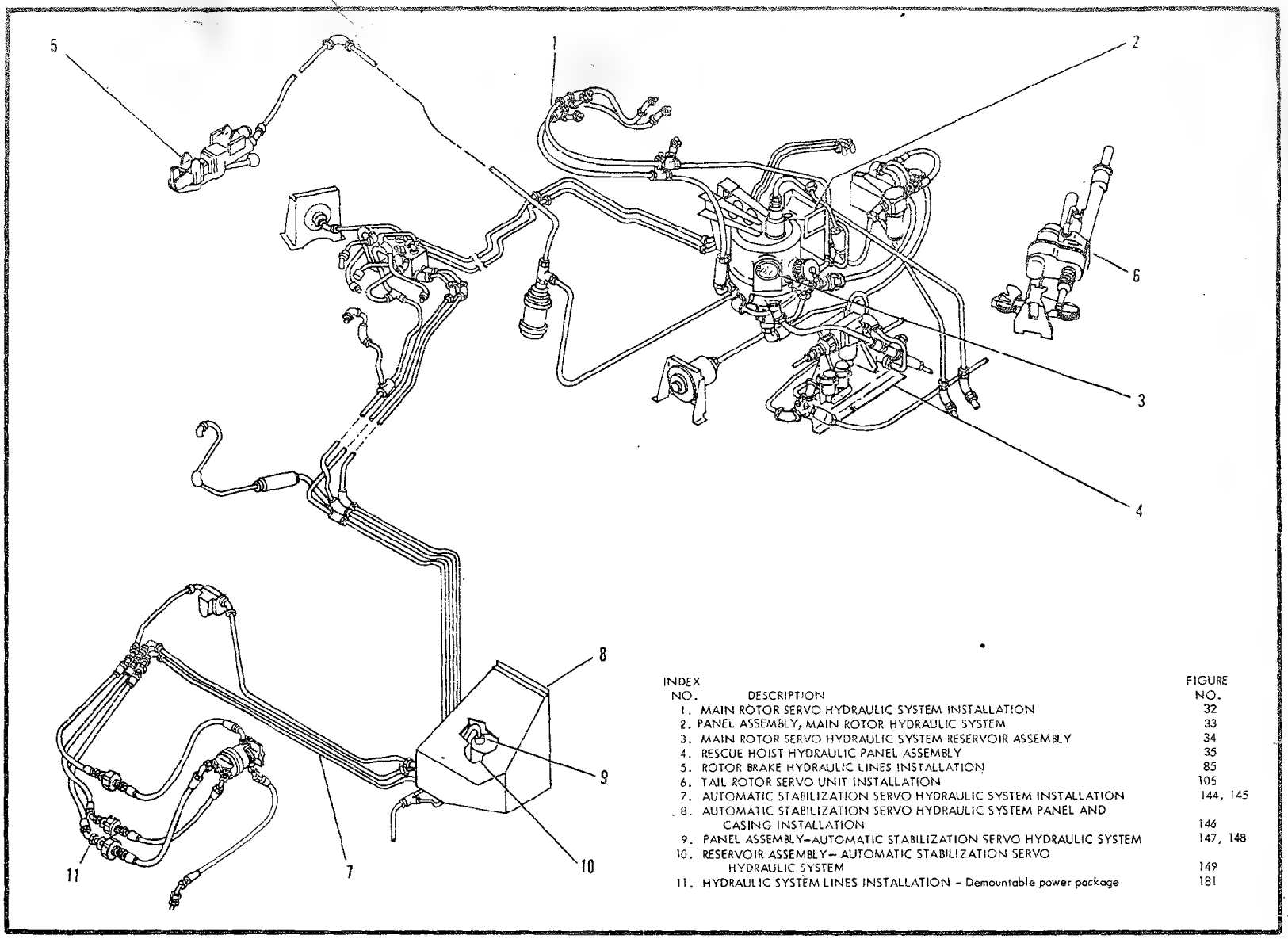

INDEX NO.	DESCRIPTION	FIGURE NO.
1.	MAIN ROTOR SERVO HYDRAULIC SYSTEM INSTALLATION	32
2.	PANEL ASSEMBLY, MAIN ROTOR HYDRAULIC SYSTEM	33
3.	MAIN ROTOR SERVO HYDRAULIC SYSTEM RESERVOIR ASSEMBLY	34
4.	RESCUE HOIST HYDRAULIC PANEL ASSEMBLY	35
5.	ROTOR BRAKE HYDRAULIC LINES INSTALLATION	85
6.	TAIL ROTOR SERVO UNIT INSTALLATION	105
7.	AUTOMATIC STABILIZATION SERVO HYDRAULIC SYSTEM INSTALLATION	144, 145
8.	AUTOMATIC STABILIZATION SERVO HYDRAULIC SYSTEM PANEL AND CASING INSTALLATION	146
9.	PANEL ASSEMBLY–AUTOMATIC STABILIZATION SERVO HYDRAULIC SYSTEM	147, 148
10.	RESERVOIR ASSEMBLY– AUTOMATIC STABILIZATION SERVO HYDRAULIC SYSTEM	149
11.	HYDRAULIC SYSTEM LINES INSTALLATION - Demountable power package	181

Figure 10. Hydraulic System

SECTION II

FUNCTIONAL GROUP 01

MAIN ROTOR AND TRANSMISSION

(1) SOURCE, MAINT AND REC CODE (a) SOURCE CODE	(b) MAINT LEVEL	(c) REC CODE	(2) FEDERAL STOCK NUMBER	REFERENCE NUMBER		(3) DESCRIPTION	MODELS USABLE ON CH-34C	(4) UNIT OF ISSUE	(5) QTY INC IN UNIT PACK	(6) QTY INC IN UNIT	(7) 30-DAY DS GS MAINT ALW (a) 1-20	(b) 21-50	(c) 51-100	(8) 1-YR ALW PER 100 EQUIP CONTGCY	(9) DEPOT MAINT ALW PER 100 EQUIP	(10) ILLUSTRATION (a) FIG NO	(b) ITEM NO
						MAIN ROTOR AND TRANSMISSION.. ASSEMBLY										11	
				S1610-10000-35	<78286>	MAIN ROTOR AND TRANSMISSION.. ASSEMBLY		EA		1						11	
				S1610-10100-5	<78286>	MAIN ROTOR AND TRANSMISSION.. ASSEMBLY		EA		1						11	
		T	1615-609-3034	S1610-20000-8	<78286>	.HEAD,ROTARY WING..... RPL-BY 1615-611-3886		EA			*	*	*			11	
		T	1615-820-3355	S1610-20000-16X	<78286>	.HEAD,ROTARY WING..... RPL-BY 1615-611-3886										11	
P	F	T	1615-611-3886	S1610-20000-16	<78286>	.HEAD,ROTARY WING..... RPLS-- 1615-609-3034, 1615-820-3355 U/W 1560-511-9517 & 1560-511-9522 ROTOR BLADES SEE FIG.12 FOR BREAKDOWN		EA		1	2	4	7	84	*	11	1
				S1635-20141-39	<78286>	.MAIN GEAR BOX OIL..... SEPARATOR INSTALLATION SEE FIG.31 FOR BREAKDOWN				1						11	2
				S1635-20181	<78286>	.TRANSMITTER AND SWITCH..... INSTALLATION-OIL PRESSURE				1						11	
P	F		4720-868-5828	MS27363E0360	<96906>	..HOSE ASSEMBLY,RUBBER.....		EA		1	*	*	*		*	11	3
			5310-282-7823	MS24400D4	<96906>	..NUT,PLAIN,HEXAGON.....		LL		2	*	*	*		*	11	4
			5330-805-2966	MS28778-4	<96906>	..PACKING,PREFORMED.....		EA		1	9	23	46	557	*	11	
			4730-803-5049	MS24396D4	<96906>	..ELBOW,TUBE.....		EA		1	*	*	*		*	11	
			6620-526-7887	ST4D	<61349>	.TRANSMITTER,PRESSURE..... RPL-BY 6620-553-8986 SEE FIG.77B FOR BREAKDOWN										11	
			6685-223-6753	4150-3B3	<19315>	.TRANSMITTER,PRESSURE..... RPL-BY 6620-553-8986										11	
P	O		6620-553-8986	MS28005-3	<96906>	.TRANSMITTER,PRESSURE..... RPLS-- 6620-526-7887, 6685-223-6753		EA		1	2	2	4	43	*	11	5
			5305-687-6724	AN503-6-6	<88044>	..SCREW,MACHINE.....		HD		1	*	*	*		*	11	6
			5310-188-7721	AN960PD6	<88044>	..WASHER,FLAT.....		HD		1	*	*	*		*	11	
			5305-984-4988	MS35206-228	<96906>	..SCREW,MACHINE.....				3	*	*	*		*	11	7
			5310-188-7721	AN960PD6	<88044>	..WASHER,FLAT.....		HD		3	*	*	*		*	11	
P	F		4720-868-6980	MS27363E0240	<96906>	..HOSE ASSEMBLY,RUBBER.....		EA		1	*	*	2		*	11	8
			4730-240-5905	AN816-4D	<88044>	..ADAPTER,STRAIGHT,PIPE TO... TUBE		EA		1	*	*	*		*	11	9
P	O		5930-296-9543	555-3912	<71688>	..SWITCH,PRESSURE..... ATTACHING PARTS		EA		1	*	*	*		*	11	10
			5306-637-8583	AN3DDH17A	<88044>	..BOLT,MACHINE.....		EA		2	*	*	*		*	11	11
			5310-183-4406	AN960PD10	<88044>	..WASHER,FLAT.....		HD		2	*	*	*		*	11	
			5310-877-5797	MS21044N3	<96906>	..NUT,SELF-LOCKING,HEXAGON...		EA		2	*	*	*		*	11	
			5306-551-6997	AN3DDH20A	<88044>	..BOLT,MACHINE.....		EA		2	*	*	*		*	11	12
			5310-183-4406	AN960PD10	<88044>	..WASHER,FLAT.....		HD		2	*	*	*		*	11	
			5310-877-5797	MS21044N3	<96906>	..NUT,SELF-LOCKING,HEXAGON...		EA		2	*	*	*		*	11	
						---*---											
P	O		1615-563-9940	S1635-20181-14	<78286>	..HALF CLAMP ASSEMBLY.....		EA		1	*	*	2		*	11	13
P	O		5340-563-9941	S1635-20181-2	<78286>	..CLAMP,LOOP.....		EA		1	*	*	*		*	11	14
			5305-989-7435	MS35207-264	<96906>	..SCREW,MACHINE.....		HD		1	*	*	*		*	11	15

(1) SOURCE, MAINT AND REC CODE (a) SOURCE	(b) MAINT LEVEL	(c) REC CODE	(2) FEDERAL STOCK NUMBER	REFERENCE NUMBER	(3) DESCRIPTION	MODELS USABLE ON CH-34C	(4) UNIT OF ISSUE	(5) QTY INC IN UNIT PACK	(6) QTY NC IN UNIT	(7) 30-DAY DS/GS MAINT ALW (a) 1-20	(b) 21-50	(c) 51-100	(8) 1-YR ALW PER 100 EQUIP CNTGCY	(9) DEPOT MAINT ALW PER 100 EQUIP	(10) ILLUSTRATION (a) FIG NO	(b) ITEM NO
			5310-877-5797	MS21044N3	<96906> ..NUT,SELF-LOCKING,HEXAGON...		EA		1	*	*	*		*	11	
P	O		4720-707-6900	EA8675	<81996> .HOSE,RUBBER.....		FT		1	14	36	71	857	*	11	16
					ATTACHING PARTS											
P	O		5340-629-1744	321-625-20615	<76700> .CLAMP.....		EA		2	*	*	*		*	11	17
					---*---											
P	O		1615-024-4974	S14-35-4405-5	<78286> .ELBOW ASSEMBLY,MAIN.....		EA		1	*	*	*		*	11	18
					TRANSMISSION GENERATOR DUCT											
					ATTACHING PARTS											
			4730-278-9105	AN737RM82	<88044> .CLAMP.....		EA		1	*	*	*		*	11	19
					---*---											
P	O	R	6115-808-4842	AN3633-1A	<88044> .GENERATOR,DIRECT CURRENT....		EA		1	*	*	*		*	11	
					RPLS											
		R	6115-241-2387	G300-3	<31435> .GENERATOR,DIRECT CURRENT....										11	
					RPL-BY 6115-808-4842											
		R	6115-250-5427	2CM75C1	<24446> .GENERATOR DIRECT CURRENT....										11	
					RPL-BY 6115-808-4842											
		R	6115-250-5428	2CM75G10	<24446> .GENERATOR DIRECT CURRENT....										11	
					RPL-BY 6115-808-4842											
		R	6115-327-9648	2CM75D2	<24446> .GENERATOR DIRECT CURRENT....										11	
					RPL-BY 6115-808-4842											
		R	6115-391-7840	A28A854-1	<83843> .GENERATOR DIRECT CURRENT....										11	
					RPL-BY 6115-808-4842											
		R	6115-504-2972	903J789-1	<83843> .GENERATOR DIRECT CURRENT....										11	
					RPL-BY 6115-808-4842											
		R	6115-510-8034	A28A8584-1T	<83843> .GENERATOR DIRECT CURRENT....										11	
					RPL-BY 6115-808-4842											
		R	6115-523-0186	2CM75C10B	<24446> .GENERATOR DIRECT CURRENT....										11	
					RPL-BY 6115-808-4842											
		R	6115-523-0204	2CM75C10BT	<24446> .GENERATOR DIRECT CURRENT....										11	
					RPL-BY 6115-808-4842											
		R	6115-523-5594	A24A9315-2A	<83843> .GENERATOR DIRECT CURRENT....										11	
					RPL-BY 6115-808-4842											
		R	6115-556-8894	2CM75D6D	<24446> .GENERATOR DIRECT CURRENT....										11	
					RPL-BY 6115-808-4842											
		R	6115-557-3752	2CM75D2BT	<24446> .GENERATOR DIRECT CURRENT....										11	
					RPL-BY 6115-808-4842											
		R	6115-557-3756	2CM75D6T	<24446> .GENERATOR DIRECT CURRENT....										11	
					RPL-BY 6115-808-4842											
		R	6115-558-6491	A50J251-4	<83843> .GENERATOR DIRECT CURRENT....										11	
					RPL-BY 6115-808-4842											
		R	6115-578-6492	A28A8584-5	<79500> .GENERATOR DIRECT CURRENT....										11	
					RPL-BY 6115-808-4842											
		R	6115-635-5606	2 CM 75C10A	24446 .GENERATOR DIRECT CURRENT....											
					RPL-BY 6115-808-4842											
		R	6115-635-8599	2CM75D6	<81893> .GENERATOR DIRECT CURRENT....										11	
					RPL-BY 6115-808-4842											
		R	6115-635-8615	2CM75D2M	<24446> .GENERATOR DIRECT CURRENT....										11	
					RPL-BY 6115-808-4842											
		R	6115-775-7946	G300-4BT	<24446> .GENERATOR DIRECT CURRENT....										11	
					RPL-BY 6115-808-4842											
		R	6115-809-0187	AN3633-1	<88044> .GENERATOR DIRECT CURRENT....										11	

(1) SOURCE, MAINT AND REC CODE (a) SOURCE CODE	(b) MAINT LEVEL	(c) REC CODE	(2) FEDERAL STOCK NUMBER	REFERENCE NUMBER	(3) DESCRIPTION	MODELS USABLE ON CH-34C	(4) UNIT OF ISSUE	(5) QTY INC IN UNIT PACK	(6) QTY INC IN UNIT	(7) 30-DAY DS/GS MAINT ALW (a) 1-20	(b) 21-50	(c) 51-100	(8) 1-YR ALW PER 100 EQUIP CNTGCY	(9) DEPOT MAINT ALW PER 100 EQUIP	(10) ILLUSTRATION (a) FIG NO	(b) ITEM NO
					CONTINUED										11	
					RPL-BY 6115-808-4842											
					INTRCH											
		R	6115-288-2970	G300-4B	<31435> .GENERATOR DIRECT CURRENT....										11	
					INTRCH 6115-808-4842											
		R	6115-827-6589	2CM75F1	<24446> .GENERATOR DIRECT CURRENT....										11	
					INTRCH 6115-808-4842											
P	O	R	6115-927-7394	AN3632-1A	<88044> .GENERATOR,DIRECT CURRENT....		EA		1	*	*	*		*	11	20
					RPLS--											
		R	6115-288-2811	30E07-3A	<24446> .GENERATOR,DIRECT CURRENT....										11	
					RPL-BY 6115-927-7394											
					SEE FIG.11D FOR BREAKDOWN											
		R	6115-635-8617	30E07-3E	<19315> .GENERATOR,DIRECT CURRENT....										11	
					RPL-BY 6115-927-7394											
					SEE FIG.11D FOR BREAKDOWN											
		R	6115-643-4937	30E07-3D	<19315> .GENERATOR,DIRECT CURRENT....										11	
					RPL-BY 6115-927-7394											
					SEE FIG.11D FOR BREAKDOWN											
					INTRCH											
P	O	R	6115-203-8987	30E07-3F	<19315> .GENERATOR,DIRECT CURRENT....		EA		1						11	
					INTRCH 6115-927-7394											
					SEE FIG.11D FOR BREAKDOWN											
		R	6115-643-4942	2CM7006A	<24446> .GENERATOR,DIRECT CURRENT....										11	
					INTRCH 6115-927-7394											
					SEE FIG.11D FOR BREAKDOWN											
					ATTACHING PARTS											
			5310-187-2400	AN960PD616	<88044> .WASHER,FLAT.....		HD		AR	*	*	*		*	11	21
			5310-275-2016	MS20364-624A	<96906> .NUT,SELF-LOCKING,HEXAGON....		HD		6	*	*	*		*	11	
					---*---											
P	O		6115-665-8842	854842	<19315> ..COVER,TERMINAL BOARD.....		EA		1	*	2	2		*	11	
P	O		1560-303-2487	S14-35-4442	<78286> .GASKET ASSEMBLY,GENERATOR...		EA		6	7	18	35		*	11	22
					MOUNTING											
P	O		1560-303-2489	S14-35-4445	<78286> .PLUG,FLANGE GENERATOR.....		EA		6	6	15	30		*	11	23
					MOUNTING											
P	O		1560-303-2488	S14-35-4443	<78286> .GASKET ASSEMBLY,GENERATOR...		EA		1	2	3	6		*	11	24
P	O		1560-098-8267	S14-35-4447	<78286> .ADAPTER,PILOT GENERATOR.....		EA		1	2	2	3		*	11	25
					MOUNTING											
P	O		5330-584-9080	AN4047-1	<88044> .GASKET.....		EA		1	9	23	46		*	11	26
P	O		6680-557-0835	MS25038-2	<96906> .GENERATOR,TACHOMETER.....		EA		1	2	3	7	82	*	11	27
					ATTACHING PARTS											
			5310-187-2354	AN960PD416	<88044> .WASHER,FLAT.....		HD		4	*	*	*		*	11	28
			5310-877-5796	MS21044N4	<96906> .NUT,SELF-LOCKING,HEXAGON....		EA		4	*	*	*		*	11	
					---*---											
			5330-023-7623	MS9134-01	<96906> .GASKET.....		EA		1	*	*	*		*	11	29
P	F		1560-694-4725	S14-35-4349	<78286> .COUPLING,LOWER HOUSING.....		EA		1	*	*	*		*	11	30
					AIROTOR WHEEL											
					ATTACHING PARTS											
			5306-182-2056	AN3H3A	<88044> .BOLT,MACHINE.....		HD		2	*	*	*		*	11	31
			5306-182-2064	AN3H13A	<88044> .BOLT,MACHINE.....		HD		1	*	*	*		*	11	32
			5310-167-0818	AN960-10	<88044> .WASHER,FLAT.....		HD		1	*	*	*		*	11	
			5310-877-5797	MS21044N3	<96906> .NUT,SELF-LOCKING,HEXAGON....		EA		1	*	*	*		*	11	
					---*---											

(1) SOURCE, MAINT AND REC CODE (a) SOURCE CODE	(b) MAINT LEVEL	(c) REC CODE	(2) FEDERAL STOCK NUMBER	(3) DESCRIPTION REFERENCE NUMBER			MODELS USABLE ON CH-34C	(4) UNIT OF ISSUE	(5) QTY INC IN UNIT PACK	(6) QTY INC IN UNIT	(7) 30-DAY DS/GS MAINT ALW (a) 1-20	(b) 21-50	(c) 51-100	(8) 1-YR ALW PER 100 EQUIP CNTGCY	(9) DEPOT MAINT ALW PER 100 EQUIP	(10) ILLUSTRATION (a) FIG NO	(b) ITEM NO
P	F		1560-340-2019	S14-35-4062-1	<78286>	.PLATE-GENERATOR COOLING..... RPLS-- 1560-692-2602 ATTACHING PARTS		EA		1	*	*	*		*	11	33
			5306-281-8945	AN4H35A	<88044>	.BOLT,MACHINE.....		EA		3	*	*	*		*	11	34
			5310-187-2354	AN960PD416	<88044>	.WASHER,FLAT.....		HD		3	*	*	*		*	11	
			5306-576-1940	AN4H53A	<88044>	.BOLT,MACHINE.....		EA		1	*	*	*		*	11	35
			5310-187-2354	AN960PD416	<88044>	.WASHER,FLAT.....		HD		1	*	*	*		*	11	
			5310-183-4406	AN960PD10	<88044>	.WASHER,FLAT.....		HD		7	*	*	*		*	11	36
			5310-877-5797	MS21044N3	<96906>	.NUT,SELF-LOCKING,HEXAGON....		EA		7	*	*	*		*	11	
						---*---											
P	F		1560-397-1630	S14-35-4347	<78286>	.AIROTOR WHEEL AND LINER..... ASSEMBLY		EA		1	*	*	*		*	11	37
P	F		5315-664-7206	S14-35-4326	<78286>	..PIN,STRAIGHT,HEADLESS.....		EA		2	*	*	*		*	11	38
P	F		1560-692-2609	S14-35-4348	<78286>	..LINER-AIROTOR WHEEL.....		EA		1	*	*	*		*	11	39
			1615-652-6918	S14-35-4100	<78286>	.HOUSING ASSEMBLY..... TRANSMISSION RPL-BY 1615-652-6918		EA			*	*	*			11	
			1560-565-5590	S14-35-4100-1	<78286>	.HOUSING ASSEMBLY..... TRANSMISSION RPL-BY 1615-652-6918										11	
P	F		1615-652-6918	S14-35-4100-2	<78286>	.HOUSING ASSEMBLY..... TRANSMISSION RPLS-- 1560-394-0138, 1560-565-5590		EA		1	*	*	*		*	11	40
P	F		5310-281-9224	RL21SB6	<83324>	..RING,LOCK,SERRATED.....		EA		15	*	*	*		*	11	41
P	D		5307-025-8269	SF91-75A8A	<83324>	..STUD,LOCKED IN.....		EA		8					*	11	42
				S1655-10032-1	<78286>	.WIRING INSTALLATION..... TRANSMISSION				1						11	
P	F		6210-519-2155	A6100C	<72914>	..LIGHT ASSEMBLY.....		EA		1	*	*	*		*	11	43
			6220-295-0897	MS25027-1	<96906>	..LIGHT,PANEL.....		EA		1	*	*	*		*	11	44
P	F		1560-654-1391	S1655-61808	<78286>	..PLUG ASSEMBLY,MAIN ROTOR...		EA		1	*	*	*		*	11	45
				S1665-20111-12	<78286>	.MAIN ROTOR SERVO HYDRAULIC.. SYSTEM INSTALLATION SEE FIG.32 FOR BREAKDOWN				1						11	46
				S1620-62500	<78286>	.MAIN ROTOR TRANSMISSION..... SUPPORT INSTALLATION SEE FIG.36 FOR BREAKDOWN				1						11	47
			1615-511-9519	S1635-20000-15	<78286>	.MAIN GEAR BOX ASSEMBLY..... RPL-BY 1615-658-9520										11	
		T	1615-601-0342	S1635-20000-12	<78286>	.MAIN GEAR BOX ASSEMBLY..... RPL-BY 1615-658-9520										11	
		T	1615-611-6552	S1635-20000-14	<78286>	.MAIN GEAR BOX ASSEMBLY..... RPL-BY 1615-658-9520										11	
		T	1615-620-5608	S1635-20000-16	<78286>	.MAIN GEAR BOX ASSEMBLY..... RPL-BY 1615-658-9520										11	
		T	1615-893-0158	S1635-20000-24	<78286>	.GEAR BOX ASSEMBLY,MAIN..... RPL-BY 1615-658-9520										11	
P	F	T	1615-658-9520	S1635-20000-19	<78286>	.GEAR BOX ASSEMBLY RPLS--... 1560-511-9519, 1615-601-0342, 1615-611-6552, 1615-620-5608,&		EA		1	2	4	7	89	*	11	48

(1) SOURCE, MAINT AND REC CODE (a) SOURCE CODE	(b) MAINT LEVEL	(c) REC CODE	(2) FEDERAL STOCK NUMBER	REFERENCE NUMBER	(3) DESCRIPTION	MODELS USABLE ON CH-34C	(4) UNIT OF ISSUE	(5) QTY INC IN UNIT PACK	(6) QTY INC IN UNIT	(7) 30-DAY DS GS MAINT ALW (a) 1-20	(b) 21-50	(c) 51-100	(8) 1-YR ALW PER 100 EQUIP CNTGCY	(9) DEPOT MAINT ALW PER 100 EQUIP	(10) ILLUSTRATION (a) FIG NO	(b) ITEM NO
					CONTINUED 1615-893-0158 SEE FIG.22 FOR BREAKDOWN										11	48
			6115-627-6805	1104017 <83298>	REPAIR KIT,GENERATOR..... OVERHAUL RPL-BY 6115-969-9232		EA			*	2	2			11	
P	H		6115-969-9232	1104017-1 <83298>	KIT,PARTS,GENERATOR..... ASSEMBLY RPLS-- 6115-627-6805 U/O 2920-037-8987, 6115-643-4937 SEE FUNCTIONAL GROUP 50 FOR COMPONENTS		EA		1	*	REF	REF		*	11	
		R	6115-203-8987	30E07-3F <19315>	GENERATOR,DIRECT CURRENT..... INTRCH 6115-927-7394 SEE FIG.11 FOR NHA										11D	
		R	6115-288-2811	30E07-3A <19315>	GENERATOR,DIRECT CURRENT..... INTRCH 6115-927-7394 SEE FIG.11 FOR NHA										11D	
		R	6115-635-8617	30E07-3E <19315>	GENERATOR,DIRECT CURRENT..... INTRCH 6115-927-7394 SEE FIG.11 FOR NHA										11D	
		R	6115-643-4937	30E07-3D <19315>	GENERATOR,DIRECT CURRENT..... INTRCH 6115-927-7394 SEE FIG.11 FOR NHA										11D	
			6115-345-5471	867488 <19315>	.SPOUT-AIR..... ATTACHING PARTS		EA		1	*	*	*			11D	1
			5305-614-0247	MS35266-64 <96906>	.SCREW,MACHINE.....NOTE 1				.5	*	*	*		*	11D	2
			5310-441-4594	19128 <19315>	.WASHER,FLAT.....NOTE 1 ---*---		EA		5	*	*	*			11D	3
				855960 <19315>	.STRAP-WINDOW.....NOTE 1 ATTACHING PARTS		EA		1						11D	4
			5305-145-6971	AN503-8-6 <88044>	.SCREW,MACHINE.....NOTE 1 ---*---		HD		2	*	*	*		*	11D	5
P	D		5977-214-1260	861904 <19315>	.BRUSH,ELECTRICAL CONTACT....		EA		4					*	11D	6
P	F		5977-037-8373	861925 <83298>	.BRUSH,ELECTRICAL.....NOTE 1		EA		4	*	*	*		*	11D	
				853774 <19315>	.RETAINER.....NOTE 1 ATTACHING PARTS		EA		1						11D	7
			5305-145-6971	AN503-8-6 <88044>	.SCREW,MACHINE.....NOTE 1 ---*---		HD		6	*	*	*		*	11D	8
			5310-441-4418	130415 <19315>	.NUT.....NOTE 1		EA		1	*	*	*		*	11D	9
				114859 <19315>	.LOCK.....NOTE 1		EA		1						11D	10
				854853 <19315>	.SHAFT,DRIVE U/O..... 6115-288-2811, 6115-643-4937		EA		1						11D	11
				1325047 <19315>	.SHAFT,DRIVE U/O.....		EA		1						11D	

(1) SOURCE, MAINT AND REC CODE (a) SOURCE CODE	(b) MAINT LEVEL	(c) REC CODE	(2) FEDERAL STOCK NUMBER	REFERENCE NUMBER		(3) DESCRIPTION	MODELS USABLE ON CH-34C	(4) UNIT OF ISSUE	(5) QTY INC IN UNIT PACK	(6) QTY INC IN UNIT	(7) 30-DAY DS/GS MAINT ALW (a) 1-20	(b) 21-50	(c) 51-100	(8) 1-YR ALW PER 100 EQUIP CNTGCY	(9) DEPOT MAINT ALW PER 100 EQUIP	(10) ILLUSTRATION (a) FIG NO	(b) ITEM NO
						CONTINUED										11D	
						2920-037-8987,											
						6115-635-8617											
						ATTACHING PARTS											
			5310-275-2016	MS20364-624A	<96906>	.NUT,SELF-LOCKING,HEXAGON.... NOTE 1		HD		1	*	*	*		*	11D	12
				84453	<19315>	.WASHER.....NOTE 1		EA		1						11D	13
				1105650	<19315>	.SPRING.....NOTE 1		EA		1						11D	14
						---*---											
				854841	<19315>	.TERMINAL.....NOTE 1		EA		1						11D	15
						ATTACHING PARTS											
			5305-145-7016	AN503-10-6	<88044>	.SCREW,MACHINE.....NOTE 1		EA		1	*	*	*		*	11D	16
			5310-167-0662	MS35337-43	<96906>	.WASHER,LOCK.....NOTE 1		HD		1	*	*	*		*	11D	17
						---*---											
				867445	<19315>	.RING U/O 6115-288-2811,....		EA		1						11D	18
						6115-635-8617,&											
						6115-643-4937											
				886862	<19315>	.BOARD ASSEMBLY U/O.....		EA		1						11D	
						6115-288-2811,											
						6115-635-8617,&											
						6115-643-4937											
				1330217	<19315>	.BOARD ASSEMBLY U/O.....		EA		1						11D	
						6115-203-8987											
						ATTACHING PARTS											
			5305-989-7435	MS35207-264	<96906>	.SCREW,MACHINE.....NOTE 1				8	*	*	*		*	11D	19
			5310-167-0662	MS35337-43	<96906>	.WASHER,LOCK.....NOTE 1		HD		8	*	*	*		*	11D	20
P	F		5310-441-4594	19128	<19315>	.WASHER,FLAT.....NOTE 1		EA		8	*	*	*		*	11D	21
						---*---											
				848977	<19315>	..ARM ASSEMBLY-BRUSH.....		EA		4						11D	22
						ATTACHING PARTS											
				847799	<19315>	..SPRING.....NOTE 1		EA		2						11D	23
				847800	<19315>	..PIN.....NOTE 1		EA		1						11D	24
				848979	<19315>	..PIN.....NOTE 1		EA		1						11D	25
						---*---											
				854849	<19315>	..BRUSHBOARD ASSEMBLY.....		EA		1						11D	26
						ATTACHING PARTS											
			5305-150-9208	AN501-10-16	<88044>	..SCREW,MACHINE.....NOTE 1		HD		4	*	*	*		*	11D	27
			5310-275-2025	MS21042-3	<96906>	..NUT,SELF-LOCKING,HEXAGON... NOTE 1				4	*	*	*		*	11D	28
			5310-167-0662	MS35337-43	<96906>	..WASHER,LOCK.....NOTE 1		HD		4	*	*	*		*	11D	29
P	F		5310-441-4594	19128	<19315>	..WASHER,FLAT.....NOTE 1		EA		4	*	*	*		*	11D	30
				854852	<19315>	..SPACER.....NOTE 1		EA		4						11D	31
						---*---											
				848044	<19315>	...JUMPER ASSEMBLY.....NOTE 1		EA		2						11D	32
						ATTACHING PARTS											
			5305-145-6971	AN503-8-6	<88044>	...SCREW,MACHINE.....NOTE 1		HD		2	*	*	*		*	11D	33
			5310-045-3299	MS35338-42	<96906>	...WASHER,LOCK.....NOTE 1		HD		2	*	*	*		*	11D	34
						---*---											
			3110-227-3497	890112-18	<19315>	.BEARING.....NOTE 1		EA		1	*	*	*			11D	35
			2925-753-9409	845615	<19315>	.PLATE,ARMATURE.....NOTE 1		EA		1	*	*	*			11D	36
			5305-145-7016	AN503-10-6	<88044>	.SCREW,MACHINE.....NOTE 1		EA			*	*	*		*	11D	37
			5310-167-0662	MS35337-43	<96906>	.WASHER,LOCK.....NOTE 1		HD		1	*	*	*		*	11D	38

(1) SOURCE, MAINT AND REC CODE (a) SOURCE CODE	(b) MAINT LEVEL	(c) REC CODE	(2) FEDERAL STOCK NUMBER	REFERENCE NUMBER		(3) DESCRIPTION	MODELS USABLE ON CH-34C	(4) UNIT OF ISSUE	(5) QTY INC IN UNIT PACK	(6) QTY INC IN UNIT	(7) 30-DAY DS/GS MAINT ALW (a) 1-20	(b) 21-50	(c) 51-100	(8) 1-YR ALW PER 100 EQUIP CNTGCY	(9) DEPOT MAINT ALW PER 100 EQUIP	(10) ILLUSTRATION (a) FIG NO	(b) ITEM NO
				854842	<19315>	.COVER,TERMINAL BOARD..... NOTE 1		EA		1						11D	39
				857206	<19315>	.TERMINAL-LH.....NOTE 1		EA		1						11D	40
						ATTACHING PARTS											
			5306-616-1224	AN6-6A	<88044>	.BOLT,MACHINE.....NOTE 1		EA		1	*	*	*		*	11D	41
			5310-637-9541	AN935-616	<88044>	.WASHER,LOCK.....NOTE 1		HD		1	*	*	*		*	11D	42
			5310-474-9811	29274	<19315>	.WASHER.....NOTE 1				1						11D	43
						---*---											
				854838	<19315>	.TERMINAL-RH.....NOTE 1		EA		1						11D	44
						ATTACHING PARTS											
			5306-616-1224	AN6-6A	<88044>	.BOLT,MACHINE.....NOTE 1		EA		1	*	*	*		*	11D	45
			5310-637-9541	AN935-616	<88044>	.WASHER,LOCK.....NOTE 1		HD		1	*	*	*		*	11D	46
			5310-474-9811	29274	<19315>	.WASHER.....NOTE 1				1						11D	47
						---*---											
			5306-182-2056	AN3H3A	<88044>	.BOLT,MACHINE.....NOTE 1		HD		2	*	*	*		*	11D	48
			5310-167-0662	MS35337-43	<96906>	.WASHER,LOCK.....NOTE 1		HD		2	*	*	*		*	11D	49
P	F		5310-441-4594	19128	<19315>	.WASHER,FLAT.....NOTE 1		EA		2	*	*	*		*	11D	50
P	H		6115-549-3418	854834	<19315>	.TERMINAL BLOCK.....		EA		1	*	*	*		*	11D	51
						ATTACHING PARTS											
			5305-150-9210	AN502-10-12	<88044>	.SCREW,MACHINE.....NOTE 1		EA		3	*	*	*		*	11D	52
			5310-167-0662	MS35337-43	<96906>	.WASHER,LOCK.....NOTE 1		HD		3	*	*	*		*	11D	53
P	F		5310-441-4594	19128	<19315>	.WASHER,FLAT.....NOTE 1		EA		3	*	*	*		*	11D	54
						---*---											
				858902	<19315>	.CLAMP.....NOTE 1		EA		1						11D	55
						ATTACHING PARTS											
			5305-145-6971	AN503-8-6	<88044>	.SCREW,MACHINE U/O NHA..... 6115-288-2811, 6115-635-8617,& 6115-643-4937 NOTE 1		HD		2	*	*	*		*	11D	56
			5305-271-7778	AN503-8-10	<88044>	.SCREW,MACHINE U/O..... 2920-037-8987 NOTE 1		HD		2	*	*	*		*	11D	
				10540	<19315>	.WASHER.....NOTE 1		EA		2						11D	57
			5310-811-3494	MS21044N08	<96906>	.NUT,SELF-LOCKING,HEXAGON.... U/O 6115-203-8987 NOTE 1		EA		2	*	*	*		*	11D	58
						---*---											
				31896	<19315>	.TERMINAL-CONDENSER....NOTE 1		EA		2						11D	59
				890376-1	<19315>	.SCREW.....NOTE 1		EA		2						11D	60
			5340-753-9419	110722	<19315>	.RING.....NOTE 1		EA		1	*	*	*			11D	61
			6115-284-1068	867447	<19315>	.HEAD.....NOTE 1		EA		1	*	*	*			11D	62
						ATTACHING PARTS											
			5305-151-3220	AN510-10-7	<88044>	.SCREW,MACHINE.....NOTE 1		EA		3	*	*	*		*	11D	63
						---*---											
			2925-753-9409	845615	<19315>	.PLATE,ARMATURE.....NOTE 1		EA		2	*	*	*			11D	64
			3110-227-3497	890112-18	<19315>	.BEARING.....NOTE 1		EA		1	*	*	*			11D	65
				867605	<19315>	.COIL AND HOUSING ASSEMBLY... U/O 6115-288-2811		EA		1						11D	65A
			5305-151-3220	AN510-10-7	<88044>	..SCREW,MACHINE.....NOTE 1		EA		2	*	*	*		*	11D	66
				854829	<19315>	..TERMINAL.....NOTE 1		EA		1						11D	67
				101330	<19315>	..TERMINAL.....NOTE 1		EA		1						11D	68
P	F		5940-644-8713	92650-9	<19315>	..TERMINAL.....NOTE 1		AV		1	*	*	*		*	11D	
				854832	<19315>	..TERMINAL.....NOTE 1		EA		1						11D	70
				854832	<19315>	..TERMINAL.....NOTE 1		EA		1						11D	71

(1) SOURCE, MAINT AND REC CODE (a) SOURCE CODE	(b) MAINT LEVEL	(c) REC CODE	(2) FEDERAL STOCK NUMBER	REFERENCE NUMBER		(3) DESCRIPTION	MODELS USABLE ON CH-34C	(4) UNIT OF ISSUE	(5) QTY INC IN UNIT PACK	(6) QTY INC IN UNIT	(7) 30-DAY DS/GS MAINT ALW (a) 1-20	(b) 21-50	(c) 51-100	(8) 1-YR ALW PER 100 EQUIP CNTGCY	(9) DEPOT MAINT ALW PER 100 EQUIP	(10) ILLUSTRATION (a) FIG NO	(b) ITEM NO
			5305-821-9866	22996-1	<19315>	.SCREW.....NOTE 1 NOTE 1 COMPONENT OF KIT 6115-969-9232 WHICH APPEARS IN FIG.11		EA		4	*	*	*			11D	
						ROTOR HEAD ASSEMBLY,MAIN.....										12	
P	F	T	1615-611-3886	S1610-20000-16	<78286>	HEAD,ROTARY WING..... RPLS-- 1615-609-3034, 1615-820-3355 U/W 1560-511-9517 & 1560-511-9522 ROTOR BLADES SEE FIG.11 FOR NHA		EA			REF	REF	REF	REF		12	
			5315-308-0158	S1610-21001	<78286>	.PIN,TAPERED,MAIN RPL-BY.... 5315-608-0705		EA			*	*	*			12	
P	O		5315-608-0705	S1610-21001-1	<78286>	.PIN,TAPERED,MAIN RPLS--.... 5315-308-0158		EA		8	6	15	30		*	12	1
			5310-167-0823	AN960-816	<88044>	.WASHER,FLAT.....		HD		8	*	*	*		*	12	2
			5310-285-5638	AN364-820C	<88044>	.NUT,SELF-LOCKING,HEXAGON....				8	*	*	*		*	12	3
P	O		1560-709-8617	S1610-21087	<78286>	.JUMPER ASSEMBLY..... NOTE 1		EA		4	*	*	*		*	12	4
P	O		1615-709-8616	S1610-21086	<78286>	.JUMPER ASSEMBLY..... NOTE 1		EA		4	26	66	132		*	12	5
						ATTACHING PARTS											
			5305-989-7435	MS35207-264	<96906>	.SCREW,MACHINE.....		HD		4	*	*	*		*	12	6
			5310-167-0818	AN960-10	<88044>	.WASHER,FLAT.....		HD		8	*	*	*		*	12	
			5305-989-7435	MS35207-264	<96906>	.SCREW,MACHINE.....		HD		4	*	*	*		*	12	7
			5310-167-0818	AN960-10	<88044>	.WASHER,FLAT.....		HD		4	*	*	*		*	12	
			5310-515-8058	AN960-8	<88044>	.WASHER,FLAT.....		HD		4	*	*	*		*	12	8
			5310-811-3494	MS21044N08	<96906>	.NUT,SELF-LOCKING,HEXAGON.... ---*---		EA		4	*	*	*		*	12	
			1615-326-3400	S1610-21007	<78286>	.ROD ASSEMBLY,MAIN ROTOR..... RPL-BY 5340-671-5927										12	
P	O		5340-671-5927	S1610-21007-1	<78286>	.ROD ASSEMBLY,MAIN ROTOR..... RPLS-- 1615-326-3400 ATTACHING PARTS		EA		4	2	2	3		*	12	9
			5306-208-9036	AN6H14	<88044>	.BOLT,MACHINE.....		EA		4	*	*	*		*	12	10
			5310-167-0821	AN960-616	<88044>	.WASHER,FLAT.....		HD		8	*	*	*		*	12	
P	O		5310-753-4151	X87-1	<13829>	.NUT,CASTELLATED,HEXAGON.....		HD		4	*	*	*		*	12	
			5315-234-1856	MS24665-155	<96906>	.PIN,COTTER.....		HD		4	*	*	*		*	12	
			5315-234-1864	MS24665-302	<96906>	.PIN,COTTER.....		HD		4	*	*	*		*	12	11
			5310-176-8111	AN320-7	<88044>	.NUT,SLOTTED,HEXAGON.....		LL		4	*	*	*		*	12	12
P	F		5310-674-0351	S1610-21021	<78286>	.WASHER.....		EA		AR	3	8	15		*	12	13
			5310-167-1347	AN315-7R	<88044>	.NUT,PLAIN,HEXAGON.....NOTE 1		LL		4	*	*	*		*	12	14
P	D		5310-576-7340	S1610-21016-1	<78286>	.WASHER,THRUST RPLS--..... 5310-209-2473 ---*---		EA		8					*	12	15

(1) SOURCE, MAINT AND REC CODE (a) SOURCE CODE	(b) MAINT LEVEL	(c) RPC CODE	(2) FEDERAL STOCK NUMBER	REFERENCE NUMBER	(3) DESCRIPTION	MODELS USABLE ON CH-34C	(4) UNIT OF ISSUE	(5) QTY INC IN UNIT PACK	(6) QTY INC IN UNIT	(7) 30-DAY DS GS MAINT ALW (a) 1-20	(b) 21-50	(c) 51-100	(8) 1-YR ALW PER 100 EQUIP CNTGCY	(9) DEPOT MAINT ALW PER 100 EQUIP	(10) ILLUSTRATION (a) FIG NO	(b) ITEM NO
P	D		5310-373-7013	S12-10-3086	<78286> .WASHER,FLAT.....		EA		1					*	12	
P	F		5307-566-3227	S1610-21017	<78286> ..STUD,SHOULDERED AND..... STEPPED RPLS-- 5307-697-0504		EA		1	*	*	*		*	12	16
			5310-208-6797	NAS509-10	<80205> ..NUT,PLAIN,HEXAGON.....		EA		1	*	*	*		*	12	17
			5310-639-4009	S1510-21015	<78286> ..LOCK,MAIN ROTOR ROD..... RPL-BY 1615-567-1087		EA								12	
P	F		1615-567-1087	S1610-21018	<78286> ..LOCK,MAIN ROTOR ROD..... RPLS-- 5310-639-4009 NOTE 1		EA		1	*	2	2		*	12	18
P	D		1615-303-2490	S1610-21010	<78286> ..CONNECTING LINK,RIGID.....		EA		1					*	12	19
			1615-091-3820	S1510-21020	<78286> .BOOT,MAIN ROTOR RPL-BY..... 1615-673-3028										12	
			1615-632-2848	S1510-21020-1	<78286> .BOOT,MAIN ROTOR RPL-BY..... 1615-673-3028		EA								12	
P	O		1615-673-3028	S1510-21020-2	<78286> .BOOT,MAIN ROTOR RPLS--..... 1615-091-3820, 1615-632-2848		EA		4	18	44	88		*	12	20
			1615-659-9196	S1610-25000-1	<78286> .RESTRAINER ASSEMBLY..... ANTI-FLAPPING RPL-BY PN S1610-25000-2										12	
AF	F			S1610-25000-2	<78286> .RESTRAINER ASSEMBLY,..... ANTI-FLAPPING RPLS-- 1615-659-9196 SEE FIG.15 FOR BREAKDOWN ATTACHING PARTS		EA		1						12	21
			5315-373-6989	S10-10-5366	<78286> .PIN RPL-BY 5315-810-4513...										12	
P	F		5315-810-4513	SS4023	<78286> .PIN,STRAIGHT,HEADED..... RPLS-- 5315-373-6989		EA		4	*	*	*		*	12	22
			5310-167-0821	AN960-616	<88044> .WASHER,FLAT.....		HD		4	*	*	*		*	12	
			5315-234-1864	MS24665-302	<96906> .PIN,COTTER.....		HD		4	*	*	*		*	12	
P	F		5306-292-3102	S10-10-5372-2	<78286> .BOLT.....		EA		4	*	*	2		*	12	23
			5310-167-0821	AN960-616	<88044> .WASHER,FLAT.....		HD		4	*	*	*		*	12	
			5310-176-8110	AN320-6	<88044> .NUT,SLOTTED,HEXAGON.....		HD		4	*	*	*		*	12	
			5315-234-1864	MS24665-302	<96906> .PIN,COTTER.....		HD		4	*	*	*		*	12	
P	F		5306-639-4440	S1610-25072	<78286> .BOLT.....		EA		4	*	*	*			12	24
			5310-167-0837	AN960-616L	<88044> .WASHER,FLAT.....		HD		4	*	*	*		*	12	
P	F		5310-122-5606	S510353	<78286> .WASHER,FLAT.....NOTE 1		EA		1	*	*	2		*	12	
			5310-176-8110	AN320-6	<88044> .NUT,SLOTTED,HEXAGON.....		HD		4	*	*	*		*	12	
			5315-234-1864	MS24665-302	<96906> .PIN,COTTER.....		HD		4	*	*	*		*	12	
					---*---											
P	O		1615-568-3825	S1610-25064	<78286> .SPACER,SLEEVE.....		EA		4	*	*	*		*	12	25
			1615-568-3826	S1610-25075	<78286> .SPRING,HELICAL,TORSION..... RPL-BY 1615-568-3827				1						12	
P	O		1615-568-3827	S1610-25075-1	<78286> .SPRING,HELICAL,TORSION..... RPLS--1615-547-7509,		EA		4	2	2	3		*	12	26
P	F		1615-285-6634	SS4051	<78286> .SPACER SLEEVE.....		EA		8	*	2	2		*	12	27
P	O		5340-596-6795	S1610-23045	<78286> .SPACER,RING.....NOTE 1		EA		1	*	*	*		*	12	
P	F		1615-563-9832	S1610-25088-1	<78286> .SPRING,HELICAL,EXTENSION.... RPLS-- 1560-319-3118		EA		8	2	3	6		*	12	28
			5315-841-4443	MS16562-225	<96906> .PIN,SPRING.....		EA		8	*	*	*		*	12	29
P	F		1615-520-6300	S1610-25081-1	<78286> .ARM-CAM,LH RPLS--.....		EA		4	*	*	*		*	12	30

(1) SOURCE, MAINT AND REC CODE (a) SOURCE CODE	(b) MAINT LEVEL	(c) REC CODE	(2) FEDERAL STOCK NUMBER	REFERENCE NUMBER	(3) DESCRIPTION	MODELS USABLE ON CH-34C	(4) UNIT OF ISSUE	(5) QTY INC IN UNIT PACK	(6) QTY INC IN UNIT	(7) 30-DAY DS/GS MAINT ALW (a) 1-20	(b) 21-50	(c) 51-100	(8) 1-YR ALWPER 100 EQUIP CNTGCY	(9) DEPOT MAINT ALWPER 100 EQUIP	(10) ILLUSTRATION (a) FIG NO	(b) ITEM NO
					CONTINUED										12	30
					1560-308-0159											
P	F		1615-520-6302	S1610-25081-2 <78286>	.ARM,MAIN ROTOR CAM,DROOP....		EA		4	*	*	*		*	12	31
					RPLS-- 1560-308-0160											
P	F		5315-313-0570	S1610-25087 <78286>	.PIN,STRAIGHT,HEADLESS.....		EA		4	2	2	3		*	12	32
			5306-182-2022	AN4H30A <88044>	.BOLT,MACHINE.....		HD		4	*	*	*		*	12	33
			5310-141-1795	AN960-416 <88044>	.WASHER,FLAT.....		HD		8	*	*	*		*	12	
			5310-877-5796	MS21044N4 <96906>	.NUT,SELF-LOCKING,HEXAGON....		EA		4	*	*	*		*	12	
			5340-632-1251	NAS43-4-192 <80205>	.SPACER,SLEEVE.....		EA		8	*	*	*		*	12	34
			1560-662-6223	S10-10-5363 <78286>	.BUSHING,SLEEVE RPL-BY.....										12	
					1615-978-5911											
P	F		1615-978-5911	SS4004 <78286>	.BUSHING,SLEEVE RPLS--.....		EA		8	*	*	*		*	12	36
					1560-662-6223											
P	D		3110-516-5777	X27R <76260>	.BEARING ROLLERS.....		EA		1					*	12	
			1615-330-6173	S1610-25083-1 <78286>	.FLAP RPL-BY 1615-564-1498..										12	
			1615-534-2051	S1610-25083-2 <78286>	.FLAP RPL-BY 1615-564-1498..		EA								12	
P	F		1615-564-1498	S1610-25083-3 <78286>	.FLAP,DROOP RESTRAINER,MAIN..		EA		4	*	*	*		*	12	37
					ROTOR RPLS--											
					1615-330-6173,											
					1615-534-2051											
AF	F			S1610-24050-4 <78286>	.SCISSORS ASSEMBLY-ROTATING..		EA		1						12	38
					STAR RPLS--											
					1560-591-6617,											
					1560-766-3447 SEE FIG.14											
					FOR BREAKDOWN											
					ATTACHING PARTS											
			5306-619-6459	NAS464-8-72 <80205>	.BOLT,SHEAR.....		EA		1	*	*	*		*	12	39
			5310-693-6979	S1610-24036 <78286>	.WASHER,THRUST RPL-BY.....										12	
					5310-580-5606											
P	F		5310-580-5606	S1610-24036-2 <78286>	.WASHER,THRUST RPLS--.....		EA		2	7	17	33		*	12	
					5310-624-6952,											
					5310-693-6979 NOTE 1											
			5310-167-0823	AN960-816 <88044>	.WASHER,FLAT.....		HD		2	*	*	*		*	12	
			5310-176-8112	AN320-8 <88044>	.NUT,SLOTTED,HEXAGON.....		LL		1	*	*	*		*	12	
			5315-234-1864	MS24665-302 <96906>	.PIN,COTTER.....		HD		1	*	*	*		*	12	
			5306-638-3693	NAS464-6-34 <80205>	.BOLT,SHEAR.....		EA		1	*	*	*		*	12	40
P	F		5310-141-3194	S1610-24065 <78286>	.WASHER,THRUST.....		EA		2	*	*	*		*	12	
			5310-187-2400	AN960PD616 <88044>	.WASHER,FLAT.....		HD		2	*	*	*		*	12	
			5310-176-8110	AN320-6 <88044>	.NUT,SLOTTED,HEXAGON.....		HD		1	*	*	*		*	12	
			5315-234-1864	MS24665-302 <96906>	.PIN,COTTER.....		HD		1	*	*	*		*	12	
					---*---											
P	F		1615-576-9135	S1610-24083 <78286>	.SHIM,MAIN ROTOR U/W.....		EA		1	*	2	2		*	12	41
					PN S1610-24035-2											
P	D		1560-633-8439	S1610-24084 <78286>	.SPACER,MAIN ROTOR,AZIMUTH...		EA		1						12	42
					STAR SCISSORS											
			1615-346-1157	S1610-21032 <78286>	.BOOT ASSEMBLY.....		EA								12	
			1615-591-6625	S1610-21032-2 <78286>	.BOOT ASSEMBLY.....										12	
			1615-633-8423	S1610-21032-5 <78286>	.BOOT ASSEMBLY.....		EA								12	
P	D		1560-608-0702	S1610-21032-4 <78286>	.BOOT ASSEMBLY.....		EA		1	5	13	26		*	12	43
					NOTE 2											
					ATTACHING PARTS											
			4730-995-7986	MS21920-45R <96906>	.CLAMP.....		EA		1	*	*	*		*	12	44

(1) SOURCE, MAINT AND REC CODE (a) SOURCE CODE	(b) MAINT LEVEL	(c) REC CODE	(2) FEDERAL STOCK NUMBER	REFERENCE NUMBER	(3) DESCRIPTION	MODELS USABLE ON CH-34C	(4) UNIT OF ISSUE	(5) QTY INC IN UNIT PACK	(6) QTY INC IN UNIT	(7) 30-DAY DS/GS MAINT ALW (a) 1-20	(b) 21-50	(c) 51-100	(8) 1-YR ALW PER 100 EQUIP CNTGCY	(9) DEPOT MAINT ALW PER 100 EQUIP	(10) ILLUSTRATION (a) FIG NO	(b) ITEM NO
					CONTINUED										12	44
					---*---											
P	O		4720-786-5312	MS27363E0120 <96906>	.HOSE ASSEMBLY,RUBBER.....		EA		4	*	*	*	*	*	12	47
AO	O			S1610-26073-2 <78286>	.TANK ASSEMBLY,FLUID.....		EA		1						12	
					ATTACHING PARTS											
			5306-182-2016	AN4H5A <88044>	.BOLT,MACHINE.....		HD		4	*	*	*		*	12	48
			5310-187-2354	AN960PD416 <88044>	.WASHER,FLAT.....		HD		4	*	*	*		*	12	49
P	O		1615-543-3114	S1610-26082 <78286>	.GASKET.....NOTE 1		EA		1	2	6	11		*	12	50
			1615-543-3114	2775 <93037>	ADDED PART NO.FOR ABOVE ITEM.		EA			REF	REF	REF			12	50
					---*---											
P	O	R	1615-574-6394	S1610-26073-1 <78286>	..TANK SUBASSEMBLY.....		EA		1	2	2	4		*	12	
P	D		1615-536-3054	S1610-26072 <78286>	...CAP,HYDRAULIC FLUID.....		EA		1					*	12	51
P	D		1650-534-4084	S1610-26071 <78286>	...BODY,FLUID TANK,AIRCRAFT..		EA		1					*	12	52
X1				S1610-26076 <78286>	...FITTING.....		EA		4						12	53
			1650-534-4095	S1610-26075 <78286>	..STRAINER ASSEMBLY.....										12	
					RPL-BY 1615-861-3853											
P	O		1615-861-3853	S1610-26075-2 <78286>	..STRAINER ASSEMBLY.....		EA		1	*	2	2		*	12	54
					RPLS-- 1650-534-4095											
			5330-579-3156	MS28775-116 <96906>	..PACKING,PREFORMED.....		EA		1	*	*	*		*	12	55
			4730-834-9560	MS24392D4 <96906>	..NIPPLE,TUBE.....		EA		4	2	5	10	120	*	12	56
			5330-584-0265	MS28775-012 <96906>	..PACKING,PREFORMED.....		EA		4	2	2	3		*	12	57
			1615-091-3860	S1610-24035 <78286>	.SCISSORS ASSEMBLY.....										12	
					STATIONARY STAR RPL-BY											
					PN S1610-24035-2											
AF	F			S1610-24035-2 <78286>	.SCISSORS ASSEMBLY.....		EA		1						12	65
					STATIONARY STAR RPLS--											
					1615-091-3860 SEE FIG.											
					13 FOR BREAKDOWN											
					ATTACHING PARTS											
			5306-639-2305	NAS464-6-28 <80205>	.BOLT,SHEAR.....		EA		1	*	*	*		*	12	66
			5310-187-2400	AN960PD616 <88044>	.WASHER,FLAT.....		HD		2	*	*	*		*	12	
			5310-187-2395	AN960PD616L <88044>	.WASHER,FLAT.....		HD		AR	*	*	*		*	12	
			5310-176-8110	AN320-6 <88044>	.NUT,SLOTTED,HEXAGON.....		HD		1	*	*	*		*	12	
			5315-234-1864	MS24665-302 <96906>	.PIN,COTTER.....		HD		1	*	*	*		*	12	
			5306-639-1454	NAS464-7-65 <80205>	.BOLT,SHEAR.....		EA		1	*	*	*		*	12	67
P	F		5310-580-5606	S1610-24036-2 <78286>	.WASHER,THRUST RPLS--.....		EA		2	REF	REF	REF		REF	12	
					5310-624-6952,											
					5310-603-6979											
			5310-187-2401	AN960PD716 <88044>	.WASHER,FLAT.....		HD		1	*	*	*		*	12	
			5310-184-8985	AN960PD716L <88044>	.WASHER,FLAT.....		HD		AR	*	*	*		*	12	
			5310-176-8111	AN320-7 <88044>	.NUT,SLOTTED HEXAGON.....		LL		1	*	*	*		*	12	
			5315-234-1864	MS24665-302 <96906>	.PIN,COTTER.....		HD		1	*	*	*		*	12	
					---*---											
			4930-627-0215	NAS2-101 <80205>	.LUBRICATOR.....NOTE 1		EA		1	*	*	*		*	12	
			1615-587-6365	S1610-21033 <78286>	.BOOT ASSEMBLY RPL-BY.....		EA								12	
					1615-607-8802											
P	O		1615-607-8802	S1610-21033-2 <78286>	.BOOT ASSEMBLY RPLS--.....		EA		1	4	11	22		*	12	68
					1615-587-6365											
			1615-092-5538	S1610-21056 <78286>	.LOCK RPL-BY 1615-591-6621..										12	
P	F		1615-591-6621	S1610-21056-1 <78286>	.LOCK,MAIN ROTOR RPLS--.....		EA		1	*	*	2		*	12	69
					1615-092-5538											
					ATTACHING PARTS											

(1) SOURCE, MAINT AND REC CODE (a) SOURCE CODE	(b) MAINT LEVEL	(c) REC CODE	(2) FEDERAL STOCK NUMBER	REFERENCE NUMBER	(3) DESCRIPTION	MODELS USABLE ON CH-34C	(4) UNIT OF ISSUE	(5) QTY INC IN UNIT PACK	(6) QTY INC IN UNIT	(7) 30-DAY DS/GS MAINT ALW (a) 1-20	(b) 21-50	(c) 51-100	(8) 1-YR ALW PER 100 EQUIP CNTGCY	(9) DEPOT MAINT ALW PER 100 EQUIP	(10) ILLUSTRATION (a) FIG NO	(b) ITEM NO
			5310-167-0822	AN960-716	<88044> .WASHER,FLAT.....		HD		AR	*	*	*		*	12	70
			5310-184-8973	AN122585	<88044> .WASHER,FLAT.....		EA		AR	*	*	*		*	12	
			5310-297-3722	EB070	<72962> .NUT.....		EA		2	*	*	*		*	12	71
					---*---											
			1560-333-4694	S1610-21069	<78286> .NUT,MAIN ROTOR HEAD..... RPL-BY 1560-522-8893				1						12	
P	F		1560-522-8893	S1610-21073	<78286> .NUT,GEAR,MAIN ROTOR..... RPLS-- 1560-333-4694		EA		1	*	*	*		*	12	72
			1560-522-8893	D62933	<14471> ADDED PART NO.FOR ABOVE ITEM.		EA			*	*	*			12	72
P	F		1615-092-5539	S1610-21058	<78286> .CONE,SPLIT,HUB ROTOR.....		EA		1	*	*	2		*	12	73
P	F		1615-302-3445	S1610-21059	<78286> .CONE,SPLIT,HUB ROTOR.....		EA		1	*	*	*		*	12	74
AD	F			S1610-23000-8	<78286> .HUB ASSEMBLY,MAIN ROTOR..... SEE FIG.16 FOR BREAKDOWN		EA		1						12	75
		T	1615-568-7717	S1610-24000-1	<78286> .STAR ASSEMBLY-AZIMUTH..... CONTROL RPL-BY 1615-676-2266										12	
		T	1615-706-5755	S1610-24000-4	<78286> .STAR ASSEMBLY,MAIN ROTOR.... RPL-BY 1615-676-2266		EA								12	
P	F	T	1615-676-2266	S1610-24000-6	<78286> .STAR ASSEMBLY,MAIN ROTOR.... AZIMUTH CONTROL RPLS-- 1615-568-7717, 1615-706-5755 SEE FIG.21 FOR BREAKDOWN		EA		1	*	2	2	17	*	12	76
			1615-715-2252	S1607-1098-2	<78286> PARTS KIT,MAIN ROTOR..... ASSEMBLY U/O 1615-611-3886 USE UNTIL EXHAUSTED REGUISITION INDIVIDUAL COMPONENTS		EA		1						12	
P	D		1615-733-2563	S1607-1098-1	<78286> PARTS KIT,MAIN ROTOR..... ASSEMBLY U/O 1615-611-3886 USE UNTIL EXHAUSTED REGUISITION INDIVIDUAL COMPONENTS NOTE 2 COMPONENT OF KIT 1615-715-2252 NOTE 3 COMPONENT OF KIT 1650-715-2243 WHICH APPEARS IN FIG.17		EA		1						12	
				S1610-24035-2	<78286> SCISSOR ASSEMBLY-..... STATIONARY STAR RPLS-- 1615-091-3860 SEE FIG.12 FOR NHA		EA								13	
			5306-282-4696	NAS464-7-48	<80205> .BOLT,SHEAR.....		EA		1	*	*	*		*	13	1
			5310-167-0822	AN960-716	<88044> .WASHER,FLAT.....		HD		AR	*	*	*		*	13	

(1) SOURCE, MAINT AND REC CODE (a) SOURCE CODE	(b) MAINT LEVEL	(c) RECOV CODE	(2) FEDERAL STOCK NUMBER	REFERENCE NUMBER	(3) DESCRIPTION	MODELS USABLE ON CH-34C	(4) UNIT OF ISSUE	(5) QTY INC IN UNIT PACK	(6) QTY INC IN UNIT	(7) 30-DAY DS GS MAINT ALW (a) 1-20	(b) 21-50	(c) 51-100	(8) 1-YR ALW PER 100 EQUIP CNTGCY	(9) DEPOT MAINT ALW PER 100 EQUIP	(10) ILLUSTRATION (a) FIG NO	(b) ITEM NO
			5310-184-8973	AN122585 <88044>	.WASHER,FLAT.....		EA		2	*	*	*		*	13	
			5310-176-8111	AN320-7 <88044>	.NUT,SLOTTED,HEXAGON.....		LL		1	*	*	*		*	13	
			5315-234-1864	MS24665-302 <96906>	.PIN,COTTER.....		HD		1	*	*	*		*	13	
P	F		5310-580-5606	S1610-24036-2 <78286>	.WASHER,THRUST RPLS--..... 5310-624-6952, 5310-693-6979		EA		2	REF	REF	REF		REF	13	2
			1615-307-3613	S1610-24047 <78286>	.LINK ASSEMBLY,MAIN ROTOR.... RPL-BY 1615-620-6054		EA								13	
			1615-600-3459	S1610-24047-1 <78286>	.LINK ASSEMBLY-UPPER..... RPL-BY 1615-620-6054		EA								13	
P	F		1615-620-6054	S1610-24047-2 <78286>	.LINK ASSEMBLY,MAIN ROTOR.... UPPER RPLS-- 1615-307-3613, 1615-600-3459		EA		1	*	*	2		*	13	3
P	H		1615-662-5605	S1610-24043 <78286>	..BUSHING SLEEVE.....		EA		2	*	2	2		*	13	4
P	F		1615-576-9134	S1610-24090 <78286>	..SHIM.....		EA		2	2	5	10		*	13	5
P	H		1615-517-9145	S1610-24044 <78286>	..BUSHING,SLEEVE.....		EA		2	2	2	3		*	13	6
			1560-576-9136	S1610-24089 <78286>	..SHIM.....		EA		2	*	*	*			13	7
			1615-326-3405	S1610-24049 <78286>	.LINK ASSEMBLY-LOWER..... RPL-BY 1615-625-0150										13	
			1615-600-3460	S1610-24049-1 <78286>	.LINK ASSEMBLY RPL-BY..... 1615-625-0150										13	
P	F		1615-625-0150	S1610-24049-3 <78286>	.LINK ASSEMBLY,MAIN..... RPLS-- 1615-326-3405, 1615-600-3460		EA		1	*	2	2		*	13	8
			4730-050-4205	MS15001-3 <96906>	..FITTING,LUBRICATION.....		EA		1	*	*	*		*	13	
P	H		3110-112-5892	GB1212X <60380>	..BEARING.....		EA		2	*	*	*		*	13	9
P	F		1615-662-7233	S1610-24063 <78286>	..SPACER,SLEEVE.....		EA		1	*	2	2		*	13	10
P	F		1615-554-6329	S1610-24064 <78286>	..SPACER-INNER RACE.....		EA		1	2	2	3		*	13	11
P	H		3110-112-5892	GB1212X <60380>	..BEARING.....		EA		2	*	*	*		REF	13	12
			4730-050-4205	MS15001-3 <96906>	..FITTING,LUBRICATION.....		EA		1	*	*	*		*	13	
P	F		1560-880-8754	S1510-24063 <78286>	..SPACER,SLEEVE.....		EA		1	*	*	*		*	13	
P	F		1615-516-2323	S1510-24064 <78286>	..SPACER,SLEEVE.....		EA		1	*	2	2		*	13	
P	F		1615-591-6614	S1610-24087-3 <78286>	...SHIM.....		EA		4	8	20	40		*	13	13
					SCISSORS ASSEMBLY-ROTATING... STAR										14	
AF	F			S1610-24050-4 <78286>	SCISSORS ASSEMBLY-ROTATING... STAR RPLS-- 1560-591-6617, 1560-766-3447 SEE FIG.12 FOR NHA		EA								14	
			5306-207-4233	NAS464-7-52 <80205>	.BOLT,SHEAR.....		EA		1	*	*	*		*	14	1
			5310-184-8973	AN122585 <88044>	.WASHER,FLAT.....		EA		2	*	*	*		*	14	
			5310-167-0822	AN960-716 <88044>	.WASHER,FLAT.....		HD		AR	*	*	*		*	14	
			5310-176-8111	AN320-7 <88044>	.NUT,SLOTTED,HEXAGON.....		LL		1	*	*	*		*	14	
			5315-234-1864	MS24665-302 <96906>	.PIN,COTTER.....		HD		1	*	*	*		*	14	
P	F		5310-580-5606	S1610-24036-2 <78286>	.WASHER,THRUST RPLS--.....		EA		2	REF	REF	REF		REF	14	2

(1) SOURCE, MAINT AND REC CODE (a) SOURCE CODE	(b) MAINT LEVEL	(c) REC CODE	(2) FEDERAL STOCK NUMBER	REFERENCE NUMBER	(3) DESCRIPTION	MODELS USABLE ON CH-34C	(4) UNIT OF ISSUE	(5) QTY INC IN UNIT PACK	(6) QTY INC IN UNIT	(7) 30-DAY DS/GS MAINT ALW (a) 1-20	(b) 21-50	(c) 51-100	(8) 1-YR ALW PER 100 EQUIP CNTGCY	(9) DEPOT MAINT ALW PER 100 EQUIP	(10) ILLUSTRATION (a) FIG NO	(b) ITEM NO
					CONTINUED 5310-624-6952 & 5310-693-6979										14	2
			1615-511-9518	S1610-24055-1 <78286>	.LINK ASSEMBLY,MAIN..... RPL-BY 1615-620-5408		EA								14	
			1615-600-3462	S1610-24055-3 <78286>	.LINK ASSEMBLY,MAIN..... RPL-BY 1615-620-5408		EA								14	
P	F		1615-620-5408	S1610-24055-4 <78286>	.LINK ASSEMBLY,MAIN..... RPLS-- 1615-511-9518, 1615-600-3462		EA		1	*	2	2		*	14	3
P	D		1615-517-9150	S1610-24058 <78286>	..BUSHING-PRESS FIT,LINE..... REAMED		EA		2					20	14	4
P	D		1615-517-9150	S1610-24058 <78286>	..BUSHING-PRESS FIT,LINE..... REAMED U/O 1560-326-3406		EA		2					REF	14	
P	D		1615-529-9954	S1610-24085 <78286>	..BUSHING,SLEEVE U/O..... 1560-620-5408, 1615-511-9518,& 1615-600-3462		EA		2					20	14	5
P	F		1615-591-6620	S1610-24087-1 <78286>	..SHIM-CEMENTED.....		EA		1	*	*	*			14	6
P	F		1615-591-6619	S1610-24087-2 <78286>	..SHIM-CEMENTED.....		EA		1	*	*	*			14	7
P	F		1615-591-6619	S1610-24087-2 <78286>	..SHIM-CEMENTED.....		EA		2	*	*	*			14	8
			1615-303-2521	S1610-24056 <78286>	..LINK-UPPER RPL-BY..... 1615-960-3926										14	
			1615-508-6950	S1610-24056-1 <78286>	..LINK,ROTATING SCISSORS..... RPL-BY 1615-960-3926										14	
P	D		1615-960-3926	S1610-24056-2 <78286>	..LINK,ROTATING SCISSORS..... RPLS-- 1615-303-2521, 1615-508-6950		EA		1					*	14	9
			1615-592-0608	S1610-24051-2 <78286>	.LINK ASSEMBLY-LOWER..... RPL-BY 1615-627-2042										14	
			1615-307-3614	S1610-24051 <78286>	.LINK ASSEMBLY-LOWER..... RPL-BY 1615-627-2047		EA								14	
P	F		1615-627-2042	S1610-24051-4 <78286>	.LINK ASSEMBLY,MAIN ROTOR.... SCISSORS,LOWER RPLS-- 1560-592-0608 & 1615-307-3614		EA		1	*	2	2		*	14	10
			4730-050-4203	MS15001-1 <96906>	..FITTING-LUBRICATION.....		EA		1	*	*	*		*	14	11
P	F		1615-516-2323	S1510-24064 <78286>	..SPACER,SLEEVE.....		EA		1	*	REF	REF		REF	14	12
P	H		3110-112-5892	GB1212X <60380>	..BEARING.....		EA		2	*	*	*		REF	14	13
P	F		1560-880-8754	S1510-24063 <78286>	..SPACER,SLEEVE.....		EA		1	*	*	*		REF	14	14
			1615-706-5733	S1510-24054-1 <78286>	...BUSHING-PRESS FIT,LINE.... REAMED RPL-BY 1615-528-5367										14	
P	D		1615-528-5367	S1510-24054 <78286>	...BUSHING,SLEEVE RPLS--.... 1560-706-5733		EA		2					*	14	15
			1615-303-2520	S1610-24052 <78286>	...LINK,MAIN ROTOR SCISSORS.. RPL-BY 1615-707-3312										14	
P	D		1615-707-3312	S1610-24052-1 <78286>	...LINK,MAIN ROTOR SCISSORS.. RPLS-- 1615-303-2520		EA		1					*	14	16
P	F		1615-576-9134	S1610-24090 <78286>	...SHIM.....		EA		2	REF	REF	REF		REF	14	
P	F		1615-591-6614	S1610-24087-3 <78286>	...SHIM.....		EA		2	REF	REF	REF		REF	14	

(1) SOURCE, MAINT AND REC CODE (a) SOURCE CODE	(b) MAINT LVL	(c) REC CODE	(2) FEDERAL STOCK NUMBER	REFERENCE NUMBER		(3) DESCRIPTION	MODELS USABLE ON CH-34C	(4) UNIT OF ISSUE	(5) QTY INC IN UNIT PACK	(6) QTY INC IN UNIT	(7) 30-DAY DS/GS MA NT ALW (a) 1-20	(b) 21-50	(c) 51-100	(8) 1-YR ALW PER 100 EQUIP CNTGCY	(9) DEPOT MAINT ALW PER 100 EQUIP	(10) ILLUSTRATION (a) FIG NO	(b) ITEM NO
AF	F			S1610-25000-2	<78286>	RESTRAINER ASSEMBLY,..... ANTI-FLAPPING RPLS-- 1615-659-9196 SEE FIG.12 FOR NHA		EA								15	
P	F		1615-397-1385	S10-10-5360	<78286>	.CONNECTING LINK,RIGID..... ATTACHING PARTS		EA		2	*	*	2		*	15	1
			5310-582-6058	AN310-6	<88044>	.NUT,CASTELLATED,HEXAGON.....		EA		2	*	*	*		*	15	2
			5310-167-0821	AN960-616	<88044>	.WASHER,FLAT.....		HD		AR	*	*	*		*	15	
			5310-167-0837	AN960-616L	<88044>	.WASHER,FLAT.....		HD		AR	*	*	*		*	15	
			5315-234-1864	MS24665-302	<96906>	.PIN,COTTER.....		HD		2	*	*	*		*	15	
						---*---											
P	F		1615-303-2528	S1610-25043	<78286>	.SHAFT,ANTI-FLAPPING.....		EA		1	*	*	*		*	15	3
			1615-323-4352	S1610-25001-1	<78286>	.PLUNGER ASSEMBLY RPL-BY.... 1615-304-4603										15	
P	F		1615-304-4603	S1610-25001	<78286>	.PLUNGER,RESTRAINER RPLS--.. 1615-323-4352 ATTACHING PARTS		EA		1	*	*	*		*	15	4
			5315-812-1236	MS20392-3C35	<96906>	.PIN,STRAIGHT,HEADED.....		EA		1	*	*	*		*	15	5
			5310-167-0835	AN960-416L	<88044>	.WASHER,FLAT.....		HD		1	*	*	*		*	15	
			5315-234-1856	MS24665-155	<96906>	.PIN,COTTER.....		HD		1	*	*	*		*	15	
						---*---											
P	F		1615-715-2590	S1610-25003-2	<78286>	.HOUSING ASSEMBLY RPLS--.... 1615-326-3407, 1615-591-6622		EA		1	*	*	*		*	15	6
			1560-662-1558	S10-10-5359-1	<78286>	..BEARING,SLEEVE.....		EA		2	*	*	*			15	7
P	D		1560-570-2046	S1610-25002-1	<78286>	..HOUSING,MAIN ROTOR.....		EA		1	*	*	*		*	15	
			4730-050-4203	MS15001-1	<96906>	..FITTING-LUBRICATION.....		EA		1	*	*	*		*	15	8
						HUB ASSEMBLY,MAIN ROTOR.....										16	
AD	F			S1610-23000-8	<78286>	HUB ASSEMBLY-MAIN ROTOR..... SEE FIG.12 FOR NHA		EA								16	
P	O		5306-721-5509	S1610-23198	<78286>	.BOLT,MACHINE.....		EA		4	4	10	19		*	16	1
			5310-595-7079	MS20002C7	<96906>	.WASHER,RECESSED.....		HD		4	*	*	*		*	16	
			5310-205-8491	MS20002-7	<96906>	.WASHER,FLAT.....		HD		4	*	*	*		*	16	
			5310-167-1288	AN310-7	<88044>	.NUT,CASTELLATED,HEXAGON.....		LL		4	*	*	*		*	16	
			5315-234-1864	MS24665-302	<96906>	.PIN,COTTER.....		HD		4	*	*	*		*	16	
P	O		1615-575-2001	S1610-26037-1	<78286>	.SPACER,SLEEVE.....		EA		4	17	42	83		*	16	2
			1615-575-2001	1318	<09292>	ADDED PART NO.FOR ABOVE ITEM.		EA			REF	REF	REF			16	2
P	O		1615-564-1502	S1610-26060-1	<78286>	.PIN ASSEMBLY.....		EA		4	17	43	87		*	16	3
			1615-564-1502	HR561	<13020>	ADDED PART NO.FOR ABOVE ITEM.		EA			REF	REF	REF			16	3
			4730-050-4203	MS15001-1	<96906>	..FITTING-LUBRICATION.....		EA		1	*	*	*		*	16	4
P	O		1560-633-8445	S1610-26059-1	<78286>	..PIN,MAIN ROTOR HUB..... RPLS-- 1560-633-8444		EA		1	2	5	9		*	16	5
P	O		1615-563-9834	S1610-26011-1	<78286>	.TRUNNION ASSEMBLY,MAIN..... ROTOR HUB		EA		4	13	32	64		*	16	6
			4730-050-4203	MS15001-1	<96906>	..FITTING-LUBRICATION.....		EA		2	*	*	*		*	16	7
P	F		1615-563-9771	S1610-26033-1	<78286>	..BUSHING,MAIN ROTOR.....		EA		2	2	3	5		*	16	8

(1) SOURCE, MAINT AND REC CODE (a) SOURCE CODE	(b) MAINT LEVEL	(c) REC CODE	(2) FEDERAL STOCK NUMBER	REFERENCE NUMBER		(3) DESCRIPTION	MODELS USABLE ON CH-34C	(4) UNIT OF ISSUE	(5) QTY INC IN UNIT PACK	(6) QTY INC IN UNIT	(7) 30-DAY DS/GS MAINT ALW (a) 1-20	(b) 21-50	(c) 51-100	(8) 1-YR ALWPER 100 EQUIP CNTGCY	(9) DEPOT MAINT ALWPER 100 EQUIP	(10) ILLUSTRATION (a) FIG NO	(b) ITEM NO
X1				S1610-26012-1	<78286>	..TRUNNION,MAIN ROTOR HUB.... RPLS-- 1560-303-2531 WHEN EXHTD RQTN NHA 1615-563-9834		EA		1						16	9
P	O		1615-340-2044	S1610-23135-1	<78286>	.BRACKET ASSEMBLY,MAIN ROTOR.		EA		4	*	2	2		*	16	10
			1615-304-4597	S1610-23035	<78286>	.BRACKET ASSEMBLY..... RPL-BY S1610-23135-2				4						16	
P	O		1615-340-1357	S1610-23135-2	<78286>	.BRACKET ASSEMBLY,MAIN ROTOR. DAMPER		EA		4	*	2	2		*	16	
						ATTACHING PARTS											
			5306-619-6458	NAS464-7-15	<80205>	.BOLT,SHEAR.....		EA		2	*	*	*		*	16	11
			5310-184-8973	AN122585	<88044>	.WASHER,FLAT.....		EA		2	*	*	*		*	16	
			5310-167-0822	AN960-716	<88044>	.WASHER,FLAT.....		HD		AR	*	*	*		*	16	
			5310-806-1831	MS21040-7	<96906>	.NUT,SELF-LOCKING,HEXAGON....		EA		2	*	*	*		*	16	
						---*---											
P	D		1615-529-9960	S1610-23038-1	<78286>	..BEARING-PRESS FIT U/W..... 1615-340-2044		EA		1					*	16	12
P	D		1615-529-9381	S1610-23038-2	<78286>	..BEARING-PRESS FIT U/W..... 1615-340-1357		EA		1					*	16	
		R	1650-305-4146	S1610-26000-1	<78286>	.DAMPER ASSEMBLY RPL-BY..... 1650-627-2034										16	
		R	1650-305-4147	S1610-26000-2	<78286>	.DAMPER ASSEMBLY RPL-BY..... 1650-627-2034										16	
		R	1615-564-1499	S1610-26000-3	<78286>	.DAMPER ASSEMBLY RPL-BY..... 1650-627-2034										16	
		R	1650-302-9076	S1610-26000	<78286>	.DAMPER ASSEMBLY RPL-BY..... 1650-627-2034										16	
P	O	R	1615-627-2034	S1610-26000-4	<78286>	.CAP,FLUTTER DAMPER..... RPLS-- 1650-302-9076, 1650-305-4146, 1650-305-4147,& 1650-564-1499 SEE FIG.17 FOR BREAKDOWN		EA		4	2	5	10	120	*	16	13
P	D		5310-208-9072	S1610-23018	<78286>	.NUT,PLAIN,ROUND.....		EA		4					*	16	14
			5310-639-8747	S1610-23065	<78286>	.WASHER,LOCK RPL-BY..... 5310-558-7497										16	
P	D		5310-558-7497	S1610-21019	<78286>	.WASHER,KEY RPLS--..... 5310-639-8747		EA		4					*	16	15
			5315-307-3608	S1610-23020	<78286>	.PIN OBS-BY 5315-658-5750....										16	
			5315-332-6559	S1610-23020-1	<78286>	.PIN OBS-BY 5315-658-5750....										16	
P	D		5315-658-5750	S1610-23020-3	<78286>	.PIN OBSLTS 5315-307-3608,... 5315-332-6559		EA		4					*	16	16
X2	F		1615-303-2492	S1610-23003	<78286>	.LOCK,MAIN ROTOR HUB..... ATTACHING PARTS		EA		4						16	17
			5305-150-9213	AN502-10-6	<88044>	.SCREW,MACHINE.....		HD		2	*	*	*		*	16	18
			5310-167-0818	AN960-10	<88044>	.WASHER,FLAT.....		HD		2	*	*	*		*	16	
						---*---											
			1560-303-2507	S1610-23050	<78286>	.SLEEVE-SPINDLE ASSEMBLY..... RPL-BY PN S1610-23050-4										16	
			1560-348-9962	S1610-23050-1	<78286>	.SLEEVE-SPINDLE ASSEMBLY..... RPL-BY PN S1610-23050-4										16	
			1560-328-4813	S1610-23050-2	<78286>	.SLEEVE-SPINDLE ASSEMBLY.....										16	

(1) SOURCE, MAINT AND REC CODE (a) SOURCE CODE	(b) MAINT LEVEL	(c) REC CODE	(2) FEDERAL STOCK NUMBER	(3) DESCRIPTION REFERENCE NUMBER			MODELS USABLE ON CH-34C	(4) UNIT OF ISSUE	(5) QTY INC IN UNIT PACK	(6) QTY INC IN UNIT	(7) 30-DAY DS/GS MAINT ALW (a) 1-20	(b) 21-50	(c) 51-100	(8) 1-YR ALW PER 100 EQUIP CNTGCY	(9) DEPOT MAINT ALW PER 100 EQUIP	(10) ILLUSTRATION (a) FIG NO	(b) ITEM NO
			5310-595-7079	MS20002C7	<96906>	.WASHER,RECESSED.....		HD		2					*	16	
			5306-638-5303	AN6H15	<88044>	.BOLT,MACHINE.....		EA		2					*	16	64
			5310-184-8974	MS 9320-12	<96906>	.WASHER,THRUST.....		EA		4					*	16	
			5310-582-6058	AN310-6	<88044>	.NUT,CASTELLATED,HEXAGON.....		EA		2					*	16	
						---*---											
P	D		1560-685-0665	S1510-21406	<78286>	.SHIM.....		EA		16					*	16	
P	D		1560-541-9907	S1610-23015	<78286>	..BUSHING,SLEEVE-PRESS FIT...		EA		2					60	16	65
						LINE REAMED											
P	D		5310-200-7749	RL24SB7	<83324>	..RING,LOCK SERRATED.....		HD		1					30	16	66
P	D		5340-290-5124	R205SB7	<83324>	..INSERT,SCREW THREAD.....		EA		1					30	16	67
P	D		5310-281-9221	RL47SB10	<83324>	..RING,LOCK.....		EA		4					30	16	68
P	D		5340-545-5788	R1110SB12	<83324>	..INSERT,SCREW THREAD.....		EA		4					30	16	69
P	D		1615-680-4181	S1610-24072-1	<78286>	..SHIM,STATIONARY STAR.....		EA		AR						16	70
						RPLS-- 1560-663-2829											
P	D		1615-340-0168	S1610-21003	<78286>	.SPACER SHIM.....		EA		8						16	71
			1615-303-2518	S1610-24040	<78286>	.BRACKET ASSEMBLY RPL-BY....										16	
						1615-511-9516											
P	F		1615-511-9516	S1610-24080	<78286>	.BRACKET ASSEMBLY RPLS--....		EA		1					*	16	72
						1615-303-2518 OBSLTS											
						1560-766-3446											
						ATTACHING PARTS											
			5306-514-8109	S1610-21171-6	<78286>	.BOLT,MACHINE RPLS--.....		EA		2						16	73
						5306-637-1518											
			5310-184-8973	AN122585	<88044>	.WASHER,FLAT.....		EA		2					*	16	74
			5310-595-7079	MS20002C7	<96906>	.WASHER,RECESSED.....		HD		2					*	16	75
			5310-297-3722	EB070	<72962>	.NUT.....		EA		2					*	16	76
						---*---											
			4730-172-0015	MS15002-3	<96906>	..FITTING-LUBRICATION.....		EA		1	*	*	*		*	16	77
			1615-303-2491	S1610-23001	<78286>	.HUB RPL-BY 1560-620-5413...										16	
			1615-591-6732	S1610-23001-1	<78286>	.HUB RPL-BY 1560-620-5413...										16	
P	D		1560-620-5413	S1610-23001-2	<78286>	.HUB,MAIN ROTOR RPLS--.....		EA		1					*	16	78
						1615-303-2491,											
						1615-591-6732											
						ATTACHING PARTS											
			5306-514-8093	S1610-21171-5	<78286>	.BOLT,MACHINE.....		EA		5						16	79
			5310-184-8973	AN122585	<88044>	.WASHER,FLAT.....		EA		5					*	16	80
			5310-595-7079	MS20002C7	<96906>	.WASHER,RECESSED.....		HD		5					*	16	81
			5310-297-3722	EB070	<72962>	.NUT.....		EA		5					*	16	82
			5306-514-8109	S1610-21171-6	<78286>	.BOLT,MACHINE RPLS--.....		EA		1						16	83
						5306-637-1518											
			5310-184-8973	AN122585	<88044>	.WASHER,FLAT U/W.....		EA		1					*	16	84
						5306-637-1518											
			5310-595-7079	MS20002C7	<96906>	.WASHER,RECESSED.....		HD		1					*	16	85
			5310-297-3722	EB070	<72962>	.NUT.....		EA		1					*	16	86
						---*---											
P	D		1615-591-6729	S1610-23182-2	<78286>	.SHIM.....		EA		1						16	87
			1615-563-9820	S1610-21083	<78286>	.SPACER,RING.....		EA		1						16	88
P	D		5340-291-3667	RR314C	<80756>	.RING,RETAINING.....		EA		4					*	16	89
P	D		5330-603-0238	62008	<79150>	.SEAL.....		EA		4					REF	16	90
P	D		3110-624-3488	SB3158A1	<78286>	.CONE AND ROLLERS,TAPERED....		EA		4					100	16	91
						ROLLER BEARING											
P	D		3110-624-3486	SB3159B1	<78286>	.CUP,TAPERED ROLLER BEARING..		EA		4					100	16	92

(1) SOURCE, MAINT AND REC CODE (a) SOURCE CODE	(b) MAINT LEVEL	(c) REC CODE	(2) FEDERAL STOCK NUMBER	REFERENCE NUMBER		(3) DESCRIPTION	MODELS USABLE ON CH-34C	(4) UNIT OF ISSUE	(5) QTY INC IN UNIT PACK	(6) QTY INC IN UNIT	(7) 30-DAY DS/GS MAINT ALW (a) 1 20	(b) 21-50	(c) 51 100	(8) 1-YR ALWPER 100 EQUIP CNTGCY	(9) DEPOT MAINT ALWPER 100 EQUIP	(10) ILLUSTRATION (a) FIG NO	(b) ITEM NO
P	D		3110-624-3489	SB315881	<78286>	.CUP,TAPERED ROLLER BEARING..		EA		4					100	16	93
P	D		1615-624-3175	S1610-23007-4	<78286>	.PLATE ASSEMBLY-LOWER.....		EA		1					*	16	94
			1615-978-2150	SKP4386-4	<78286>	..BUSHING RPL-BY..... 1615-065-2055										16	
P	D		1615-065-2055	S1607-1096-2	<78286>	..BUSHING,SLEEVE RPLS--..... 1615-978-2150		EA		8					*	16	
MD	D			S1610-23007-5	<78286>	..PLATE ASSEMBLY..... MAKEFR 1 EA 1615-624-3175 PLATE ASSY		EA		1						16	
P	D		5310-208-5986	S1610-23094	<78286>	..NUT,PLAIN,ROUND.....		EA		4					REF	16	95
P	D		5310-698-5421	S1610-23093-1	<78286>	..WASHER,LOCK		EA		4					REF	16	96
P	D		1615-591-6683	S1610-23044-2	<78286>	..LINER-LOWER.....		EA								16	
			1615-563-6713	S1610-23044-1	<78286>	..LINER,MAIN ROTOR PLATE.....		EA		4						16	
P	D		1615-633-0457	S1610-23176	<78286>	..SHIM.....		EA		4					*	16	98
P	D		1615-619-6721	S1610-23178	<78286>	..SHIM-CEMENTED.....		EA		4						16	99
			1560-633-8434	S1610-23181-2	<78286>	..SHIM.....		EA		4						16	100
				51610-23184-2	<78286>	..SHIM.....		EA		16						16	101
P	D		1615-576-8120	S1610-23184-1	<78286>	..SHIM.....		EA		8					20	16	102
P	D		5310-559-0892	S1610-23180	<78286>	..NUT,SPACER,PLATE.....		EA		4						16	103
AD	D	R		S1610-23121-2	<78286>	.HINGE ASSEMBLY,MAIN ROTOR... HUB RPLS-- 1615-303-2500 1615-328-4809, 1615-328-5173, 1615-563-9829, 1615-571-1543,& 1615-697-0505 SEE FIG.20 FOR BREAKDOWN		EA		4						16	104
P	O	R	1615-627-2034	S1610-26000-4	<78286>	DAMPER ASSEMBLY,MAIN ROTOR..... RPLS-- 1650-302-9076, 1650-305-4146, 1650-305-4147,& 1650-564-4199 SEE FIG.16 FOR NHA		EA			REF	REF	REF	REF		17	
P	F		1560-307-3615	S1610-26024	<78286>	.COVER,DAMPER ASSEMBLY..... ATTACHING PARTS		EA		1	*	2	2		*	17	1
P	F		5305-298-8368	S1610-24028	<78286>	.SETSCREW.....		EA		1	*	*	*		*	17	2
			5310-187-2354	AN960PD416	<88044>	.WASHER,FLAT..... ---*---		HD		1	*	*	*		*	17	
			4730-837-8169	MS24391-4L	<96906>	.PLUG,MACHINE THREAD.....		EA		1	*	*	*		*	17	3
			5330-584-0265	MS28775-012	<96906>	.PACKING,PREFORMED.....		EA		1	REF	REF	REF		*	17	4
P	F		4730-677-2227	S1610-26077	<78286>	.PLUG,MACHINE THREAD.....		EA		1	*	*	*			17	5
			5330-803-7208	MS28778-2	<96906>	.PACKING,PREFORMED.....		EA		1	3	7	15		*	17	6
			5305-803-9738	MS 35265-59	<96906>	.SCREW,MACHINE.....				1	*	*	*		*	17	7
P	D		5330-580-5329	110-8	<66579>	.PACKING WITH RETAINER.....		LL		*	*	*	*		*	17	8
P	H		4730-349-1848	S1610-26057	<78286>	.PLUG,MACHINE THREAD.....		EA		1	*				*	17	9

(1) SOURCE, MAINT AND REC CODE (a) SOURCE CODE	(b) MAINT LEVEL	(c) REC CODE	(2) FEDERAL STOCK NUMBER	REFERENCE NUMBER	(3) DESCRIPTION	MODELS USABLE ON CH-34C	(4) UNIT OF ISSUE	(5) QTY INC IN UNIT PACK	(6) QTY INC IN UNIT	(7) 30-DAY DS GS MAINT ALW (a) 1-20	(b) 21-50	(c) 51-100	(8) 1 YR ALW PER 100 EQUIP CNTGCY	(9) DEPOT MAINT ALW PER 100 EQUIP	(10) ILLUSTRATION (a) FIG NO	(b) ITEM NO
			5330-804-5695	MS28778-6	<96906> .PACKING,PREFORMED.....		EA		1	32	80	160		*	17	10
			5330-584-0265	MS28775-012	<96906> .PACKING,PREFORMED.....		EA		2	REF	REF	REF		*	17	11
P	H		1560-307-3566	S1510-26055	<78286> .VALVE ASSEMBLY,DAMPER.....		EA		1	*	2	2		*	17	12
X1				S1510-26055-1	<78286> ..PIN.....		EA		2						17	
			5315-582-2466	NAS561P4-11	<80205> ..PIN,SPRING.....		EA		1					*	17	
P	D		3110-100-6147	MS150453	<96906> ..BALL,BEARING.....		HD		1	*	*	*		*	17	
			5305-803-9738	MS 35265-59	<96906> .SCREW,MACHINE.....				2	*	*	*		*	17	13
P	D		5330-580-5329	110-8	<86579> .PACKING WITH RETAINER.....		LL		2	*	*	*		REF	17	14
			4730-725-4351	MS 24394D1	<96906> .ELBOW,TUBE.....		EA		1	*	*	*		*	17	15
			4730-277-6372	AN6289-4	<88044> .LOCKNUT,TUBE FITTING.....		EA		1	*	*	*		*	17	16
			5330-805-2966	MS28778-4	<96906> .PACKING,PREFORMED.....		EA		1	REF	REF	REF	REF	*	17	17
			5330-186-4947	MS28777-4	<96906> .WASHER,NONMETALLIC.....		LL		1	*	*	*		*	17	18
			5310-939-0783	MS21083N12	<96906> .NUT,SELF-LOCKING,HEXAGON....				1	*	*	*		*	17	19
			1615-303-2532	S1610-26022	<78286> .SHOCK ABSORBER ASSEMBLY..... OBS-BY 1615-650-8589										17	
P	F		1615-650-8589	S1610-26022-2	<78286> .SHOCK ABSORBER ASSEMBLY..... OBSLTS 1615-303-2532		EA		4	*	*	2		*	17	20
			1560-533-0272	S10-10-6432	<78286> .BOOT RPL-BY 1560-632-4411..										17	
			1560-632-2849	S10-10-6432-1	<78286> .BOOT RPL-BY..... 1560-632-4411				1						17	
P	F		1560-632-4411	S10-10-6432-2	<78286> .BOOT RPLS-- 1560-533-0272..		EA		1	4	9	18		*	17	21
P	F		4730-677-2227	S1610-26077	<78286> .PLUG,MACHINE THREAD...NOTE 1		EA		1	*	*	*		*	17	22
			5330-805-2966	MS28778-4	<96906> .PACKING,PREFORMED.....		EA		1	REF	REF	REF	REF	*	17	23
			5306-637-8633	MS20004H8	<96906> .BOLT,INTERNAL WRENCHING.....		EA		8	*	*	*		*	17	
			5310-596-1766	MS20002C4	<96906> .WASHER,RECESSED.....		HD		8	*	*	*		*	17	
			5310-184-9001	AN960PD416L	<88044> .WASHER,FLAT.....		HD		8	*	*	*		*	17	
			5310-877-5796	MS21044N4	<96906> .NUT,SELF-LOCKING,HEXAGON....		EA		8	*	*	*		*	17	24
			5315-559-7467	NAS561C4-18	<80205> .PIN,SPRING.....		EA		1	*	*	*		*	17	25
			1615-303-2534	S1610-26063	<78286> .SHOCK ABSORBER ASSEMBLY..... RPL-BY 1615-574-6392										17	
P	F		1615-574-6392	S1610-26063-2	<78286> .SHOCK ABSORBER ASSEMBLY..... RPLS-- 1615-303-2534		EA		1	*	*	*		*	17	26
P	F		1560-536-3071	S1610-26034-1	<78286> ...BEARING,SLEEVE RPLS--.... 1560-528-5280		EA		2	4	9	18		*	17	27
P	F		5330-599-8381	S1510-26017	<78286> .WASHER.....		EA		AR	*	*	*		*	17	28
			5330-171-5075	MS28782-16	<96906> .RETAINER,PACKING.....		EA		2	*	*	*		*	17	29
			5330-559-6182	MS28775-211	<96906> .PACKING,PREFORMED.....		EA		2	*	*	*		*	17	30
			5330-171-5075	MS28782-16	<96906> .RETAINER,PACKING.....		EA		2	*	*	*		*	17	31
			5330-579-7914	MS28775-217	<96906> .PACKING,PREFORMED.....		EA		2	19	47	93		*	17	32
			1560-315-5870	S1510-26039	<78286> .RETAINER,DAMPER ASSEMBLY.... RPL-BY 1560-010-7527										17	
P	H		1560-010-7527	S1510-26039-1	<78286> .NUT,RETAINER RPLS--..... 1560-315-5870		EA		4	*	*	2		*	17	33
			5330-297-6527	MS29513-233	<96906> .PACKING,PREFORMED.....		EA		1	*	*	*		*	17	34
			5330-194-3721	AN6227B38	<88044> .PACKING,PREFORMED.....		EA		1	*	*	*		*	17	35
				S1610-26004-1	<78286> .ROD ASSEMBLY.....		EA		1						17	
P	H		1615-709-8618	S1610-26004-2	<78286> .PISTON ROD ASSEMBLY.....		EA		1	*	*	*		*	17	36
P	H		1615-326-3409	S1610-26005	<78286> ..ROD,PISTON,MAIN ROTOR..... DAMPER		EA		4	*	2	2		*	17	36A
			5305-150-9213	AN502-10-6	<88044> ..SCREW,MACHINE.....		HD		2	*	*	*		*	17	37
			5310-167-0753	AN960PD10L	<88044> ..WASHER,FLAT.....		HD		2	*	*	*		*	17	
P	H		1650-564-1501	S1610-26050-4	<78286> ..VALVE ASSEMBLY-RELIEF.....		EA		2	*	*	*			17	38

(1) SOURCE, MAINT AND REC CODE (a) SOURCE CODE	(b) MAINT LEVEL	(c) REC CODE	(2) FEDERAL STOCK NUMBER	REFERENCE NUMBER		(3) DESCRIPTION	MODELS USABLE ON CH-34C	(4) UNIT OF ISSUE	(5) QTY INC IN UNIT PACK	(6) QTY INC IN UNIT	(7) 30-DAY DS/GS MAINT ALW (a) 1-20	(b) 21-50	(c) 51-100	(8) 1-YR ALW PER 100 EQUIP CNTGCY	(9) DEPOT MAINT ALW PER 100 EQUIP	(10) ILLUSTRATION (a) FIG NO	(b) ITEM NO
						CONTINUED NOTE 3										17	38
			5330-350-9013	AN6227B10	<88044>	..PACKING,PREFORMED.....		EA		2	*	*	*		*	17	39
			1560-567-1092	S1610-26003-1	<78286>	.CYLINDER AND HEAD ASSEMBLY.. RPL-BY 1560-659-9197										17	
P	H		1560-659-9197	S1610-26003-2	<78286>	.CYLINDER AND HEAD ASSEMBLY.. RPLS-- 1560-567-1092		EA		1	*	*	*		*	17	40
P	D		1560-662-7077	S1510-26038	<78286>	..BEARING,SLEEVE.....		EA		1					*	17	41
X1				S1610-26002	<78286>	..HEAD,MAIN ROTOR HEAD..... DAMPER WHEN EXHTD RQTN NHA 1560-659-9197		EA		1						17	42
			4730-277-6352	AN932-1	<88044>	..PLUG,PIPE.....		EA		1	*	*	*		*	17	43
			1650-662-4285	S1610-26016	<78286>	..BUSHING,SLEEVE RPL-BY..... 1615-618-6374										17	
P	H		1615-618-6374	S1610-26016-1	<78286>	..BUSHING,SLEEVE RPLS--..... 1650-662-4285		EA		1	3	7	15		*	17	44
P	H		1615-618-6374	S1610-26016-1	<78286>	..BUSHING,SLEEVE RPLS--..... 1650-662-4285		EA		1	REF	REF	REF		REF	17	45
P	D		1560-662-7077	S1510-26038	<78286>	..BEARING,SLEEVE.....		EA		1					REF	17	47
			1560-340-1380	S1610-26001-1	<78286>	..CYLINDER RPL-BY..... PN S1610-26001-2										17	
X1				S1610-26001-2	<78286>	..CYLINDER RPLS--..... PN S1610-26001-1 WHEN EXHTD RQTN NHA 1560-659-9197		EA		1						17	48
			1650-715-2243	S1607-1097-1	<78286>	PARTS KIT,FLUTTER DAMPER..... RPL-BY 1615-944-2543										17	
P	H		1615-944-2543	S1607-1097-3	<78286>	PARTS KIT,FLUTTER DAMPER..... RPLS-- 1650-715-2243 U/O 1650-627-2034 SEE FUNCTIONAL GROUP 50 FOR COMPONENTS		KT		1	2	2	3		*	17	
P	H		1615-715-8739	S1607-1097-2	<78286>	PARTS KIT,MAIN ROTOR DAMPER.. U/O 1650-627-2034 SEE FUNCTIONAL GROUP 50 FOR COMPONENTS NOTE 1 COMPONENT OF KIT 1650-715-2243 NOTE 3 COMPONENT OF KIT 1615-944-2543		EA		1	3	8	16		*	17	
				S1610-23050-4	<78286>	SLEEVE-SPINDLE ASSEMBLY..... RPLS-- 1560-303-2507, 1560-328-4813,		EA								18	

(1) SOURCE, MAINT AND REC CODE (a) SOURCE CODE	(b) MAINT LEVEL	(c) REC CODE	(2) FEDERAL STOCK NUMBER	REFERENCE NUMBER	(3) DESCRIPTION	MODELS USABLE ON CH-34C	(4) UNIT OF ISSUE	(5) QTY INC IN UNIT PACK	(6) QTY INC IN UNIT	(7) 30-DAY DS GS MAINT ALW (a) 1-20	(b) 21-50	(c) 51-100	(8) 1-YR ALW PER 100 EQUIP CNTGCY	(9) DEPOT MAINT ALW PER 100 EQUIP	(10) ILLUSTRATION (a) FIG NO	(b) ITEM NO
					CONTINUED										18	
					1560-348-9962,&											
					1560-574-6391 SEE FIG.16											
					FOR NHA											
			5305-145-7016	AN503-10-6 <88044>	.SCREW,MACHINE.....		EA		1	*	*	*		*	18	1
					-ALTERNATE-											
			5305-145-7018	AN503-10-10 <88044>	.SCREW,MACHINE.....		HD		1	*	*	*			18	
			5310-183-4406	AN960PD10 <88044>	.WASHER,FLAT.....		HD		1	*	*	*		*	18	
			5310-167-0662	MS35337-43 <96906>	.WASHER,LOCK.....		HD		1	*	*	*		*	18	
			5330-054-6890	AN6230B32 <88044>	.PACKING,PREFORMED.....		EA		1	*	*	*		*	18	2
			1615-307-3611	S1610-23086 <78286>	.CAP ASSEMBLY RPL-BY.....		EA								18	
					1560-651-2333											
P	H		1615-651-2333	S1610-23086-2 <78286>	.CAP ASSEMBLY RPLS--.....		EA		1	*	*	*		*	18	3
					1615-307-3611											
P	H		5310-200-7749	RL24SB7 <83324>	..RING,LOCK,SERRATED.....		HD		1	*	*	*		REF	18	4
P	H		5340-200-4187	R105SB7 <83324>	..INSERT,SCREW THREAD.....		EA		1	*	*	*		15	18	5
P	H		5310-208-9073	S1610-23031 <78286>	.NUT,PLAIN,ROUND.....		EA		1	*	*	*		*	18	6
P	H		5310-568-5252	S1610-23030 <78286>	.WASHER LOCK.....		EA		1	*	*	*		*	18	7
P	H		5310-286-9642	S1610-23029 <78286>	.WASHER.....		EA		1	*	*	*		*	18	8
			1615-303-2506	S1610-23049 <78286>	.SLEEVE ASSEMBLY RPL-BY.....										18	
					1615-798-9005											
P	H		1615-798-9005	S1610-23049-3 <78286>	.SLEEVE,SPINDLE ASSEMBLY,....		EA		1	*	*	*		20	18	9
					MAIN ROTOR RPLS--											
					1615-303-2506											
P	H		5310-208-5987	S1610-23057 <78286>	..NUT,PLAIN,ROUND.....		EA		1	*	*	*		*	18	10
P	H		5310-568-5255	S1610-23058 <78286>	..WASHER,KEY.....		EA		1	*	*	*		*	18	11
			5340-141-3193	S1610-23059 <78286>	..SPACER,RING RPL-BY.....										18	
					5340-597-8356											
P	H		5340-597-8356	S1610-23059-1 <78286>	..SPACER,RING RPLS--.....		EA		1	*	*	*		*	18	12
					5340-141-3193											
P	H		5330-591-6685	S1610-23034 <78286>	..WASHER,NONMETALLIC.....		EA		1	*	*	*		*	18	13
				S1610-23048-2 <78286>	..HORN ASSEMBLY USBL EFF....		EA		1						18	
					53-4475 THRU 54-3050 SEE											
					FIG.19 FOR BREAKDOWN											
AH	H			S1610-23048-5 <78286>	..HORN ASSEMBLY USBL EFF....		EA		1						18	14
					55-4485 & SUBSEQUENT SEE											
					FIG.19 FOR BREAKDOWN											
			5305-964-0780	MS 35190-256 <96906>	..SCREW,MACHINE.....		EA		1	*	*	*		*	18	15
			5310-515-8058	AN960-8 <88044>	..WASHER,FLAT.....		HD		1	*	*	*		*	18	
			5310-176-8135	AN340-8 <88044>	..NUT,PLAIN,HEXAGON.....		GR		1	*	*	*		*	18	
P	H		1560-613-0955	S1610-23053 <78286>	..BRACKET.....		EA		1	*	*	*		*	18	17
X2	F			S1610-23087 <78286>	..PLATE.....		EA		1						18	19
P	H		1560-303-2508	S1610-23055 <78286>	.SPACER,SLEEVE.....		EA		1	*	*	*		*	18	20
P	H		5340-282-1648	RR537 <80756>	.RING,RETAINING.....		EA		1	*	*	*			18	21
			5330-178-7298	53X2708 <73680>	.SEAL RPL-BY 5330-076-6057..										18	
P	H		5330-076-6057	21089-2708 <73680>	.SEAL RPLS-- 5330-178-7298..		EA		1	*	*	*		*	18	22
			3110-624-3628	SB1510-1 <78286>	.BEARING ASSEMBLY-STACK.....										18	
					RPL-BY 3110-627-7825											
P	H	U	3110-627-7825	SB1510-2 <78286>	.BEARING,BALL,STACK ROTOR....		EA		1	*	*	2		*	18	23
					BLADE RPLS--											
					3110-624-3628											
P	H	U	3110-627-7827	SB1511-2 <78286>	.BEARING,BALL,ANNULAR.....		EA		1	*	*	*		75	18	24

(1) SOURCE, MAINT AND REC CODE (a) SOURCE CODE	(b) MAINT LEVEL	(c) REC CODE	(2) FEDERAL STOCK NUMBER	REFERENCE NUMBER		(3) DESCRIPTION	MODELS USABLE ON CH-34C	(4) UNIT OF ISSUE	(5) QTY INC IN UNIT PACK	(6) QTY INC IN UNIT	(7) 30-DAY DS/GS MAINT ALW (a) 1-20	(b) 21-50	(c) 51-100	(8) 1-YR ALW PER 100 EQUIP CNTGCY	(9) DEPOT MAINT ALW PER 100 EQUIP	(10) ILLUSTRATION (a) FIG NO	(b) ITEM NO
			1615-303-2502	S1610-23027	<78286>	.SPINDLE ASSEMBLY RPL-BY.... 1560-323-4356		EA								18	
			1560-328-4810	S1610-23027-1	<78286>	.SPINDLE ASSEMBLY RPL-BY.... 1560-323-4356										18	
P	H		1615-323-4356	S1610-23027-2	<78286>	.SPINDLE ASSEMBLY RPLS--.... 1560-328-4810, 1615-303-2502		EA		1	*	*	*		*	18	25
			4730-287-3712	AN932M3	<88044>	..PLUG,PIPE.....		EA		1	*	*	*		*	18	26
			1615-307-3607	S1610-23016	<78286>	..PLUG,MAIN ROTOR SPINDLE.... RPL-BY 1615-613-3217										18	
			1615-346-1165	S1610-23016-2	<78286>	..PLUG,MAIN ROTOR SPINDLE.... RPL-BY 1615-613-3217										18	
P	H		1615-613-3217	S1610-23016-3	<78286>	..CAP,MAIN ROTOR,SPINDLE..... RPLS-- 1615-307-3607, 1560-346-1165		EA		1	*	*	*		*	18	27
P	F		1615-600-3285	S1610-21022	<78286>	..PAD,MAIN ROTOR SPINDLE.....		EA		1	2	2	3		*	18	28
			1560-662-6880	S10-10-3389	<78286>	..BEARING,SLEEVE OBS-BY..... 1560-517-0216										18	
P	H		1615-517-0216	S10-10-3389-1	<78286>	..BUSHING,SLEEVE OBSLTS..... 1560-662-6880		EA		2	*	*	*		35	18	29
						..PLUG-WELSH 2 IN.DIA.....		EA		1						18	30
				S1610-23048-2	<78286>	HORN ASSEMBLY USBL EFF..... 53-4475 THRU 54-3050 SEE FIG.18 FOR NHA		EA								19	
AH	H			S1610-23048-5	<78286>	HORN ASSEMBLY USBL EFF..... 55-4485 & SUBSEQUENT SEE FIG.18 FOR NHA		EA								19	
			5310-187-2354	AN960PD416	<88044>	.WASHER,FLAT.....		HD		1	*	*	*		*	19	
			5310-857-4960	MS21044D4	<96906>	.NUT,SELF-LOCKING,HEXAGON....		EA		1	*	*	*		*	19	1
			5355-568-5257	S1610-23067	<78286>	.KNOB RPL-BY 5355-620-6053..										19	
P	D		5355-620-6053	S1610-23067-1	<78286>	.KNOB,MAIN ROTOR HORN..... RPLS-- 5355-568-5257		EA		1					*	19	2
P	F		5310-205-8211	S10-10-3365	<78286>	.WASHER,FLAT.....		EA			*	*	*			19	
P	F		5310-766-3566	S10-10-3365-1	<78286>	.WASHER,FLAT.....		EA		1	*	*	*		*	19	3
P	F		5310-637-0785	S10-10-3368	<78286>	.NUT,PLAIN,ROUND.....		EA		1	*	*	*		*	19	4
			5310-550-0579	S10-10-3369	<78286>	.WASHER,LOCK RPL-BY..... 5310-579-1259		EA			*	*	*			19	
P	D		5310-579-1259	S10-10-3369-1	<78286>	.WASHER,LOCK RPLS--..... 5310-550-0579		EA		1					*	19	5
			1615-302-3446	S1610-23061	<78286>	.LOCK ASSEMBLY RPL-BY..... 1615-980-9397										19	
			1560-620-6052	S1610-23061-1	<78286>	.LOCK ASSEMBLY RPL-BY..... 1615-980-9397										19	
P	F		1615-980-9397	S1610-23061-2	<78286>	.LOCK ASSEMBLY,HORN,MAIN..... HUB ASSEMBLY RPLS--		EA		1	3	7	14		*	19	6

(1) SOURCE, MAINT AND REC CODE (a) SOURCE CODE	(b) MAINT LEVEL	(c) REC CODE	(2) FEDERAL STOCK NUMBER	REFERENCE NUMBER	(3) DESCRIPTION	MODELS USABLE ON CH-34C	(4) UNIT OF ISSUE	(5) QTY INC IN UNIT PACK	(6) QTY INC IN UNIT	(7) 30-DAY DS GS MAINT ALW (a) 1-20	(b) 21-50	(c) 51-100	(8) 1-YR ALW PER 100 EQUIP CNTGCY	(9) DEPOT MAINT ALW PER 100 EQUIP	(10) ILLUSTRATION (a) FIG NO	(b) ITEM NO
					CONTINUED										19	6
					1615-302-3446,											
					1560-620-6052											
P	F		5315-664-9535	S1610-23066 <78286>	..PIN,STRAIGHT,HEADLESS.....		EA		1					*	19	7
P	D		1615-307-3610	S1610-23064 <78286>	..STEM,LOCK HORN,MAIN ROTOR..		EA		1					*	19	8
			1615-307-3609	S1610-23063 <78286>	..PLUNGER ASSEMBLY RPL-BY...										19	
					1615-981-6913											
			1615-633-8425	S1610-23063-1 <78286>	..PLUNGER ASSEMBLY RPL-BY...										19	
					1615-981-6913											
P	D		1615-981-6913	S1610-23063-4 <78286>	..PLUNGER ASSEMBLY,MAIN.....		EA		4					*	19	9
					ROTOR RPLS--											
					1615-307-3609,											
					1615-633-8425											
P	F		1615-303-2510	S1610-23062 <78286>	..HOUSING,LOCK,HORN.....		EA		4	*	*	*		*	19	9A
			4730-050-4203	MS15001-1 <96906>	.FITTING-LUBRICATION.....		EA		1	*	*	*		*	19	10
P	F		5310-335-5215	S1510-23074 <78286>	.NUT,CAP,MAIN ROTOR HORN.....		EA		1	*	*	*		*	19	11
P	F		5310-609-5573	S1510-23076-1 <78286>	.WASHER,MAIN ROTOR.....		EA		1	2	3	6		*	19	12
P	F		1615-536-7335	S1510-23071 <78286>	.TRUNNION ASSEMBLY.....		EA		1	*	2	2		*	19	13
			5315-234-1864	MS24665-302 <96906>	..PIN,COTTER.....		HD		1					*	19	14
P	D		5310-753-4151	X87-1 <13829>	..NUT,CASTELLATED,HEXAGON....		HD		1					REF	19	15
			5310-167-0821	AN960-616 <88044>	..WASHER,FLAT.....		HD		1					*	19	16
P	D		5340-285-6974	RR87 <80756>	..RING,RETAINING.....		EA		1					*	19	17
			3110-142-4468	MS20201KP6A <96906>	..BEARING,BALL,AIRFRAME.....		EA		1					*	19	18
P	D		5340-285-6974	RR87 <80756>	..RING,RETAINING.....		EA		1					REF	19	19
P	D		5310-122-5606	S510353 <78286>	..WASHER,FLAT.....		EA		AR						19	20
			3110-227-3430	GB10120H <60380>	..WASHER,FLAT.....		EA		2						19	21
P	D		1615-533-0282	S1510-23079 <78286>	..SPACER,HORN ASSEMBLY.....		EA		1					40	19	22
P	D		1560-307-3563	S1510-23073 <78286>	..HOUSING,TRUNNION,HORN,.....		EA		1					*	19	22A
					MAIN ROTOR											
P	F		1560-091-3822	S1510-23078 <78286>	..YOKE ASSEMBLY.....		EA		4	*	*	*		*	19	23
P	F		5305-206-3759	6467J <97577>	...SCREW MACHINE.....		EA		2	*	*	*		*	19	24
P	F		1615-486-6957	6466J <76260>	...PLATE,TRUNNION.....		EA		2	*	*	*		*	19	25
P	H		1560-562-7897	113X27R <76260>	...BEARING ASSEMBLY.....		EA		2	*	*	*		*	19	26
P	H		5330-141-3479	6465J <97577>	...WASHER,NONMETALLIC.....		EA		2	*	*	*		*	19	27
			4730-050-4203	MS15001-1 <96906>	...FITTING-LUBRICATION.....		EA		1	*	*	*		*	19	28
			1615-251-9685	S10-10-3385 <78286>	...SPIDER,MAIN ROTOR.....										19	
					RPL-BY 1560-340-0165											
P	D		1615-340-0165	S1510-23085 <78286>	...SPIDER,MAIN ROTOR.....		EA		1					*	19	29
					RPLS-- 1560-251-9685											
			1615-304-4582	S1510-23072 <78286>	...TRUNNION YOKE,MAIN.....										19	
					RPL-BY 1615-611-5910											
P	F		1615-611-5910	S1510-23072-1 <78286>	...YOKE-TRUNNION RPLS--.....		EA		4	*	*	*		*	19	30
					1615-304-4582											
			1615-303-2505	S1610-23048-3 <78286>	.HORN SUBASSEMBLY RPL-BY....		EA								19	
					1615-591-6686											
P	D		1615-591-6686	S1610-23048-6 <78286>	.HORN SUBASSEMBLY RPLS--....		EA		1					*	19	31
					1615-303-2505											
					..PIN-DRIV-LOK TYPE A.....		EA		1						19	32
			1560-303-2503	S1610-23033 <78286>	..LINER OBS-BY.....										19	
					1560-591-6687											
P	D		1615-591-6687	S1610-23033-1 <78286>	..LINER OBSLTS 1560-303-2503		EA		1					*	19	33
P	F		1615-576-9142	S1610-23173-1 <78286>	..SHIM-CEMENTED.....		EA		1	*	2	2		*	19	34

(1) SOURCE, MAINT AND REC CODE (a) SOURCE CODE	(b) MAINT LEVEL	(c) REC CODE	(2) FEDERAL STOCK NUMBER	REFERENCE NUMBER		(3) DESCRIPTION	MODELS USABLE ON CH-34C	(4) UNIT OF ISSUE	(5) QTY INC IN UNIT PACK	(6) QTY INC IN UNIT	(7) 30-DAY DS/GS MAINT ALW (a) 1-20	(b) 21-50	(c) 51-100	(8) 1-YR ALW PER 100 EQUIP CNTGCY	(9) DEPOT MAINT ALW PER 100 EQUIP	(10) ILLUSTRATION (a) FIG NO	(b) ITEM NO
P	F		1615-576-9143	S1610-23173-2	<78286>	..SHIM,MAIN ROTOR HORN.....		EA		1	*	2	2		*	19	35
P	F		1615-619-6722	S1610-23174-2	<78286>	..SHIM-CEMENTED.....		EA		1	*	*	*		*	19	36
P	F		1615-576-9144	S1610-23175-1	<78286>	..SHIM CEMENTED.....		EA		1	2	2	4		*	19	37
P	F		1615-576-9145	S1610-23175-2	<78286>	..SHIM-CEMENTED.....		EA		1	2	2	5		*	19	38
AD	D	R		S1610-23121-2	<78286>	HINGE ASSEMBLY,MAIN ROTOR.... HUB RPLS-- 1615-328-4809, 1615-328-5173, 1615-563-9829, 1615-571-1543,& 1615-697-0505 SEE FIG.16 FOR NHA		EA								20	
P	D		1560-783-4796	27609-7380	<73680>	.SEAL,MAIN ROTOR.....		EA		2					25	20	2
			5310-568-5247	S1610-23014	<78286>	.NUT,PLAIN,ROUND OBS-BY..... 5310-587-3981										20	
P	D		5310-587-3981	S1610-23014-2	<78286>	.NUT,PLAIN,ROUND OBSLTS..... 5310-568-5247		EA		1					15	20	3
			5310-587-3981	214-459	<00301>	ADDED PART NO.FOR ABOVE ITEM.		EA								20	3
			5310-639-3844	S1610-23017	<78286>	.WASHER,MAIN ROTOR HINGE..... LOCK RPL-BY 5310-574-0152										20	
			5310-637-8371	S1610-23017-1	<78286>	.WASHER,KEY RPL-BY..... 5310-574-0152										20	
P	D		5310-574-0152	S1610-23017-2	<78286>	.WASHER,MAIN ROTOR HINGE LOCK RPLS-- 5310-639-3844 5310-639-3844		EA		1					50	20	4
P	D		3110-624-3497	SB3205A1	<78286>	.CONE AND ROLLERS,TAPERED.... ROLLER BEARING		EA		1					50	20	5
			1615-303-2496	S1610-23008	<78286>	.INNER SPACER,MAIN ROTOR..... RPL-BY 1615-591-6737										20	
			1615-332-3512	S1610-23008-1	<78286>	.INNER SPACER MAIN ROTOR..... RPL-BY 1615-591-6737										20	
P	D		1615-591-6737	S1610-23008-2	<78286>	.INNER SPACER,MAIN ROTOR..... RPLS-- 1615-303-2496, 1615-332-3512		EA		1					*	20	6
P	D		3110-624-3497	SB3205A1	<78286>	.CONE AND ROLLERS,TAPERED.... ROLLER BEARING		EA		1					REF	20	7
P	D		1615-303-2501	S1610-23024	<78286>	.SPACER,RING.....		EA		1					*	20	8
P	D		1560-303-2493	S1610-23004	<78286>	.SPACER.....		EA		1					*	20	9
			3110-227-4667	HM807010	<60038>	.CUP,TAPERED ROLLER BEARING.. RPL-BY 3110-624-3496		EA								20	
P	D		3110-624-3496	SB3205B1	<78286>	.CUP,TAPERED ROLLER BEARING.. RPLS-- 3110-227-4667		EA		1					50	20	10
P	D		3110-624-3496	SB3205B1	<78286>	.CUP,TAPERED ROLLER BEARING.. RPLS-- 3110-227-4667		EA		1					REF	20	11
			4730-172-0028	MS15003-4	<96906>	.FITTING-LUBRICATION.....		EA		1					*	20	12
			4730-027-6595	MS21337-3	<96906>	.PLUG,PIPE.....		EA		2					*	20	13

(1) SOURCE, MAINT AND REC CODE (a) SOURCE CODE	(b) MAINT LEVEL	(c) REC CODE	(2) FEDERAL STOCK NUMBER	(3) DESCRIPTION REFERENCE NUMBER			MODELS USABLE ON CH-34C	(4) UNIT OF ISSUE	(5) QTY INC IN UNIT PACK	(6) QTY INC IN UNIT	(7) 30-DAY DS GS MAINT ALW (a) 1-20	(b) 21-50	(c) 51-100	(8) 1-YR ALW PER 100 EQUIP CNTGCY	(9) DEPOT MAINT ALW PER 100 EQUIP	(10) ILLUSTRATION (a) FIG NO	(b) ITEM NO
P	D		1615-326-3401	S1610-23032	<78286>	.PLUG,MAIN ROTOR HINGE.....		EA		2					*	20	14
P	D		1560-528-5131	S1610-25086	<78286>	.BUSHING,SLEEVE.....		EA		1					*	20	15
			1560-662-5499	S10-10-5349	<78286>	.BEARING,SLEEVE RPL-BY..... 1560-517-0213										20	
P	D		1560-517-0213	S10-10-5349-1	<78286>	.BEARING,SLEEVE RPLS--..... 1560-662-5499		EA		2					*	20	16
			1560-517-0213	A875	<13730>	ADDED PART NO.FOR ABOVE ITEM.		EA								20	16
P	F	T	1615-676-2266	S1610-24000-6	<78286>	STAR ASSEMBLY,MAIN ROTOR..... AZIMUTH CONTROL RPLS-- 1560-568-7717, 1560-706-5755 SEE FIG.12 FOR NHA		EA			*	REF	REF	REF		21	
			5306-843-9964	AN74A4	<88044>	.BOLT,MACHINE.....		EA		12	*	*	*		*	21	1
P	H		1560-795-2786	S1610-24025-1	<78286>	.RETAINER.....		EA		1	*	*	*		*	21	2
P	D		1615-680-4181	S1610-24072-1	<78286>	.SHIM RPLS-- 1560-663-2829..		EA		AR						21	3
			1560-672-4816	S1610-24001-6	<78286>	.STAR ASSEMBLY-ROTATING..... RPL-BY 1615-991-0294										21	
AH	F			S1610-24001-9	<78286>	.STAR ASSEMBLY,AZIMUTH..... RPLS-- 1560-326-3403, 1560-672-4816		EA		1						21	4
P	F		1560-524-8379	S1610-21031-1	<78286>	..RETAINER,BOOT,ROTATING..... STAR,MAIN ROTOR ATTACHING PARTS		EA		2	*	*	*		*	21	5
			5306-754-1788	MS20074-04-05	<96906>	..BOLT,MACHINE..... ---*---		HD		12	*	*	*		*	21	6
			1615-302-3448	S1610-24004	<78286>	..RETAINER RPL-BY..... 1615-987-1384										21	
P	H		1615-987-1384	S1610-24004-1	<78286>	..RETAINER,MAIN ROTOR STAR... RPLS-- 1615-302-3448		EA		1	*	*	*		*	21	7
			1560-680-4123	S1610-24007-3	<78286>	..SHIM-LAMINATED.....		EA		1	*	*	*			21	8
P	H		1560-680-4182	S1610-24007-4	<78286>	..SHIM-SOLID.....		EA		1	*	*	*			21	9
			1615-303-2512	S1610-24005	<78286>	..SOCKET BALL RING ASSEMBLY.. RPL-BY 1615-570-2344										21	
P	H		1615-570-2344	S1610-24005-1	<78286>	..SOCKET ASSEMBLY,MAIN..... ROTOR RPLS-- 1615-303-2512		EA		1	*	2	2		*	21	10
P	D		1560-866-9483	S1610-24006-1	<78286>	...RING,SOCKET,MAIN ROTOR....		EA		1					*	21	11
P	D		1560-866-9483	S1610-24006-1	<78286>	...RING,SOCKET,MAIN ROTOR....		EA		1					REF	21	13
P	H		5310-568-9486	S1610-24031-1	<78286>	..WASHER,SPRING TENSION.....		EA		1	*	*	*		*	21	14
P	F		1615-303-2522	S1610-24061	<78286>	..BRACKET ASSEMBLY,MAIN..... ATTACHING PARTS		EA		1	*	2	2		*	21	15
			5306-180-2750	AN5H11	<88044>	..BOLT,MACHINE.....		HD		2	*	*	*		*	21	16
			5310-187-2399	AN960PD516	<88044>	..WASHER,FLAT.....		HD		2	*	*	*		*	21	
			5310-167-0836	AN960-516L	<88044>	..WASHER,FLAT.....		HD		2	*	*	*		*	21	
			5310-167-1286	AN310-5	<88044>	..NUT,CASTELLATED,HEXAGON....		HD		2	*	*	*		*	21	16A
			5315-234-1856	MS24665-155	<96906>	..PIN,COTTER.....		HD		2	*	*	*		*	21	

(1) SOURCE, MAINT AND REC CODE (a) SOURCE CODE	(b) MAINT LEVEL	(c) REC CODE	(2) FEDERAL STOCK NUMBER	REFERENCE NUMBER	(3) DESCRIPTION	MODELS USABLE ON CH-34C	(4) UNIT OF ISSUE	(5) QTY INC IN UNIT PACK	(6) QTY INC IN UNIT	(7) 30-DAY DS/GS MAINT ALW (a) 1-20	(b) 21-50	(c) 51-100	(8) 1-YR ALW PER 100 EQUIP CNTGCY	(9) DEPOT MAINT ALW PER 100 EQUIP	(10) ILLUSTRATION (a) FIG NO	(b) ITEM NO
					CONTINUED ---*---										21	
			5340-804-3893	MS16625-1143	<96906> ...RING,RETAINING.....		EA		1	*	*	*		*	21	17
P	F		3110-198-0338	DSP6	<21335> ...BEARING,BALL,AIRFRAME.....		EA		1					*	21	18
P	H		1560-509-4567	S1610-24060	<78286> ...BRACKET,MAIN ROTOR.....		EA		1					*	21	19
			4730-050-4203	MS15001-1	<96906> ..FITTING-LUBRICATION.....		EA		4	*	*	*		*	21	20
P	F		5305-298-8368	S1610-24028	<78286> ..SETSCREW.....		EA		8	*	*	*		*	21	21
			5310-187-2354	AN960PD416	<88044> ..WASHER,FLAT.....		HD		8	*	*	*		*	21	
			1560-303-2513	S1610-24020	<78286> ..BEARING ASSEMBLY RPL-BY... 1560-671-5306										21	
P	F		1560-671-5306	S1610-24020-1	<78286> ..BEARING ASSEMBLY RPLS--... 1560-303-2513		EA		4	3	9	17		*	21	22
			5315-234-1864	MS24665-302	<96906> ...PIN,COTTER.....		HD		1	*	*	*		*	21	23
			5310-176-8110	AN320-6	<88044> ...NUT,SLOTTED,HEXAGON.....		HD		1	*	*	*		*	21	24
P	F		5310-560-9142	S1610-24029	<78286> ...WASHER,STATIONARY.....		EA		1	*	*	*		40	21	25
			3110-142-4468	MS20201KP6A	<96906> ...BEARING,BALL,AIRFRAME.....		EA		2	*	*	*		*	21	26
			5306-637-1577	S1610-24021	<78286> ...BOLT,EYE RPL-BY..... 5306-671-5903										21	
			5306-567-9840	S1610-24021-1	<78286> ...BOLT,EYE RPL-BY..... 5306-671-5903										21	
P	H		5306-671-5903	S1610-24021-2	<78286> ...BOLT RPLS--..... 5306-567-9840, 5306-637-1577		EA		1	*	*	*		*	21	27
			5340-205-4223	TX93071-8	<59875> ...RING RETAINING RPL-BY.... 5340-807-5333										21	
			5340-807-5333	MS16625-4068	<96906> ...RING,RETAINING..... RPLS-- 5340-205-4223		EA		1	*	*	*		*	21	28
			3110-142-4468	MS20201KP6A	<96906> ...BEARING,BALL,AIRFRAME.....		EA		1	*	*	*		*	21	29
P	F		5310-122-5606	S510353	<78286> ...WASHER,FLAT.....		EA		AR	*	*	REF			21	30
P	H		3110-142-4476	AN201KP10A	<88044> ...BEARING,BALL,AIRFRAME.....		EA		1	*	*	*		*	21	31
			1615-303-2514	S1610-24022	<78286> ...LINER RPL-BY..... 1615-070-2692										21	
P	H		1615-070-2692	S1610-24022-1	<78286> ...LINER,MAIN ROTOR RPLS--.. 1615-303-2514		EA		1	*	*	*		*	21	32
			1615-303-2511	S1610-24001-3	<78286> ..STAR SUBASSEMBLY-ROTATING.. RPL-BY 1615-944-4900										21	
P	D		1615-944-4900	S1610-24001-5	<78286> ..STAR SUBASSEMBLY-ROTATING.. RPLS--1615-303-2511		EA		1					*	21	34
X1				1185-4X3/4	<78286> ...INSERT.....		EA		24						21	
			1560-302-3447	S1610-24003	<78286> ...LINER RPL-BY..... 1560-650-8590										21	
P	D		1560-650-8590	S1610-24003-2	<78286> ...LINER RPLS--..... 1560-302-3447		EA		1					*	21	35
P	D		1615-619-6726	S1610-24093	<78286> ...SHIM-CEMENTED.....		EA		1						21	37
			1560-567-1089	S1610-24012-2	<78286> .STAR ASSEMBLY-STATIONARY.... RPL-BY 1560-589-4300										21	
			1560-326-3404	S1610-24012	<78286> .STAR ASSEMBLY RPL-BY..... 1560-589-4300										21	
P	D	R	1560-589-4300	S1610-24012-5	<78286> .STAR ASSEMBLY-STATIONARY.... RPLS-- 1560-326-3404, 1560-567-1089		EA		1					*	21	40
			1560-694-2473	S1610-24034	<78286> ..RETAINER RPL-BY.....										21	

(1) SOURCE, MAINT AND REC CODE (a) SOURCE CODE	(b) MAINT LEVEL	(c) REC CODE	(2) FEDERAL STOCK NUMBER	REFERENCE NUMBER	(3) DESCRIPTION	MODELS USABLE ON CH-34C	(4) UNIT OF ISSUE	(5) QTY INC IN UNIT PACK	(6) QTY INC IN UNIT	(7) 30-DAY DS GS MAINT ALW (a) 1-20	(b) 21-50	(c) 51-100	(8) 1-YR ALW PER 100 EQUIP CNTGCY	(9) DEPOT MAINT ALW PER 100 EQUIP	(10) ILLUSTRATION (a) FIG NO	(b) ITEM NO
					CONTINUED										21	
					1560-590-3753											
P	F		1560-590-3753	S1610-24034-1 <78286>	..RETAINER RPLS--.....		EA		1	*	*	*		*	21	41
					1560-694-2473											
			1560-590-3753	61-334 <13027>	ADDED PART NO. FOR ABOVE ITEM.		EA			*	*	*			21	41
					ATTACHING PARTS											
			5306-180-2705	AN4H22 <88044>	..BOLT,MACHINE.....		HD		12	*	*	*		*	21	42
			5310-187-2354	AN960PD416 <88044>	..WASHER,FLAT.....		HD		12	*	*	*		*	21	
			5310-877-5796	MS21044N4 <96906>	..NUT,SELF-LOCKING,HEXAGON...		EA		12	*	*	*		*	21	42A
					---*---											
			1615-302-3451	S1610-24017 <78286>	..RING,STATIONARY STAR.....										21	
					RPL-BY 1615-591-6612											
P	D		1615-591-6612	S1610-24017-1 <78286>	..RING,WASHER RPLS--.....		EA		1					*	21	43
					1615-302-3451											
		R	3110-624-3626	SB1553-1 <78286>	..BEARING,BALL,ANNULAR.....										21	
					RPL-BY 3110-626-9515											
P	H	U	3110-626-9515	SB1553-1 <78286>	..BEARING,BALL,ANNULAR.....		EA		1	*	*	2		*	21	44
					RPLS-- 3110-624-3626											
P	H		1615-532-2327	S1610-24009-1 <78286>	..SPACER,SET,MAIN ROTOR.....		EA		1	*	*	*		*	21	45
			1560-680-4183	S1610-24071-1 <78286>	..SHIM-CEMENTED.....		EA		AR	*	*	*			21	47
			4730-050-4203	MS15001-1 <96906>	..FITTING-LUBRICATION.....		EA		4	*	*	*		*	21	48
			4730-172-0010	MS15002-1 <96906>	..FITTING-LUBRICATION.....		EA		1	*	*	*		*	21	49
					RPLS-- 1560-692-2645											
P	F		5305-298-8368	S1610-24028 <78286>	..SETSCREW.....		EA		8	*	*	*		*	21	50
			5310-187-2354	AN960PD416 <88044>	..WASHER,FLAT.....		HD		8	*	*	*		*	21	
P	F		1560-671-5306	S1610-24020-1 <78286>	..BEARING ASSEMBLY RPLS--...		EA		4	REF	REF	REF		REF	21	51
					1560-303-2513											
			5315-234-1864	MS24665-302 <96906>	...PIN,COTTER.....		HD		1	*	*	*		*	21	52
			5310-176-8110	AN320-6 <88044>	...NUT,SLOTTED,HEXAGON.....		HD		1	*	*	*		*	21	53
P	F		5310-560-9142	S1610-24029 <78286>	...WASHER,STATIONARY.....		EA		1	*	*	*		REF	21	54
			3110-142-4468	MS20201KP6A <96906>	...BEARING,BALL,AIRFRAME.....		EA		2	*	*	*		*	21	55
P	H		5306-671-5903	S1610-24021-2 <78286>	...BOLT RPLS--.....		EA		1	*	*	*		REF	21	56
					5306-567-9840,											
					5306-637-1577											
			5340-807-5333	MS16625-4068 <96906>	...RING,RETAINING.....		EA		1	*	*	*		*	21	57
			3110-142-4468	MS20201KP6A <96906>	...BEARING,BALL,AIRFRAME.....		EA		1	*	*	*		*	21	58
P	F		5310-122-5606	S510353 <78286>	...WASHER,FLAT.....		EA		AR	*	*	REF			21	59
P	H		3110-142-4476	AN201KP10A <88044>	...BEARING,BALL,AIRFRAME.....		EA		1	*	*	*		REF	21	60
P	H		1615-070-2692	S1610-24022-1 <78286>	...LINER,MAIN ROTOR RPLS--..		EA		1	*	*	*		REF	21	61
					1615-303-2514											
			1615-307-3612	S1610-24012-1 <78286>	..STAR SUBASSEMBLY.....										21	
					STATIONARY RPL-BY											
					1615-591-6693											
P	D		1615-591-6693	S1610-24012-4 <78286>	..STAR SUBASSEMBLY.....		EA		1					*	21	62
					STATIONARY RPLS--											
					1615-307-3612											
P	H		1615-630-9367	S1610-24015-1 <78286>	...LINER,MAIN ROTOR.....		EA		1	*	*	*		*	21	63
P	H		1615-591-6694	S1610-24094 <78286>	...SHIM,MAIN ROTOR.....		EA		2	*	*	*		*	21	64

(1) SOURCE, MAINT AND REC CODE (a) SOURCE CODE	(b) MAINT LEVEL	(c) REC CODE	(2) FEDERAL STOCK NUMBER	REFERENCE NUMBER		(3) DESCRIPTION	MODELS USABLE ON CH-34C	(4) UNIT OF ISSUE	(5) QTY INC IN UNIT PACK	(6) QTY INC IN UNIT	(7) 30-DAY DS/GS MAINT ALW (a) 1-20	(b) 21-50	(c) 51 100	(8) 1-YR ALWPER 100 EQUIP CNTGCY	(9) DEPOT MAINT ALWPER 100 EQUIP	(10) ILLUSTRATION (a) FIG NO	(b) ITEM NO
P	F	T	1615-658-9520	S1635-20000-19	<78286>	GEAR BOX ASSEMBLY RPLS--.... 1560-511-9519, 1615-601-0342, 1615-611-6552, 1615-620-5608,& 1615-893-0158 SEE FIG.11 FOR NHA		EA			REF	REF	REF	REF		22	
				S1635-20002-5	<78286>	.HOUSING AND SHAFT ASSEMBLY.. UPPER SEE FIG.23 FOR BREAKDOWN		EA		1						22	1
						ATTACHING PARTS											
			5306-180-2724	AN5H31	<88044>	.BOLT,MACHINE.....		EA		19					*	22	2
			5310-194-0636	MS9320-11	<96906>	.WASHER,THRUST.....		EA		19					*	22	
			5310-088-0553	MS21044N5	<96906>	.NUT,SELF-LOCKING,HEXAGON....		HD		19					*	22	2A
			5310-088-0553	MS21044N5	<96906>	.NUT,SELF-LOCKING,HEXAGON....		HD		17					*	22	3
						---*---											
			1560-320-6942	S1635-20080	<78286>	.GASKET RPL-BY 1560-315-6334										22	
P	D		1560-315-6334	S1635-20080-1	<78286>	.GASKET RPLS-- 1560-320-6942		EA		1					50	22	5
			5310-208-4112	MS24400D16	<96906>	.NUT,PLAIN,HEXAGON.....		EA		1					*	22	6
			5330-804-5694	AN6290-16	<88044>	.PACKING,PREFORMED.....		EA		1					*	22	7
			4730-279-0122	MS24396D16	<96906>	.ELBOW,TUBE.....		EA		1					*	22	8
			4730-826-7567	AN929A16	<88044>	.CAP,TUBE.....		EA		1					*	22	9
AD	D			S1635-20001-17	<78286>	.HOUSING ASSEMBLY,MAIN..... TRANSMISSION RPLS-- 1560-304-4611, 1560-570-4884,& 1560-614-5135 SEE FIG.25 FOR BREAKDOWN		EA		1						22	12
P	D		1560-715-2263	S1607-3603-2	<78286>	PARTS KIT,MAIN GEAR BOX..... <CURE DATE> U/O 1615-893-0158 SEE FUNCTIONAL GROUP 50 FOR COMPONENTS		EA		1					*	22	
P	D		1560-715-2262	S1607-3603-1	<78286>	PARTS KIT,MAIN GEAR BOX..... <OVERHAUL> U/O 1615-893-0158 SEE FUNCTIONAL GROUP 50 FOR COMPONENTS		EA		1					*	22	
				S1635-20002-5	<78286>	HOUSING AND SHAFT ASSEMBLY... UPPER SEE FIG.22 FOR NHA		EA								23	
P	F		5330-713-1401	D65X3275	<73680>	.SEAL,PLAIN ENCASED.....		EA		1	2	2	4		*	23	1
						-ALTERNATE-											
P	F		5330-154-1223	53X3275	<73680>	.SEAL,PLAIN ENCASED.....		EA		1	*	*	*			23	
			5306-023-7195	MS20073-04-07	<88044>	.BOLT,MACHINE.....		EA		7	*	*	*		*	23	2
			5310-194-0637	MS9320-10	<96906>	.WASHER,THRUST.....		EA		7	*	*	*		*	23	

(a) SOURCE CODE	(b) MAINT CODE	(c) RECOVERY CODE	FEDERAL STOCK NUMBER	REFERENCE NUMBER		DESCRIPTION	MODELS USABLE ON CH-34C	UNIT OF ISSUE	QTY INC IN UNIT PACK	WT INC IN UNIT	30-DAY DS MAINT ALW (a) 1-20	(b) 21-50	(c) 51-100	1-YR ALW PER 100 EQUIP CNTGCY	DEPOT MAINT ALW PER 100 EQUIP	ILLUSTRATION (a) FIG NO	(b) ITEM NO
			5310-187-2354	AN960PD416	<88044>	.WASHER,FLAT.....		HD		7	*	*	*		*	23	
			5306-023-7195	MS20073-04-07	<96906>	.BOLT,MACHINE.....		EA		1	*	*	*		*	23	3
			5310-194-0637	MS9320-10	<96906>	.WASHER,THRUST.....		EA		1	*	*	*		*	23	
P	F		1560-524-8378	S1610-24037-1	<78286>	.RETAINER ASSEMBLY.....		EA		1	*	*	*		*	23	4
P	F		1560-591-6797	S1610-24037-4	<78286>	.RETAINER SECTION.....		EA		1	*	*	*		*	23	5
P	D		1560-303-2578	S1635-20126	<78286>	.RETAINER ASSEMBLY,HOUSING...		EA		1					100	23	6
P	D		1560-662-7529	S1635-20124	<78286>	..BEARING,SLEEVE.....		EA		2					*	23	7
P	D		1560-303-2577	S1635-20125	<78286>	..LINER,RETAINER,HOUSING.....		EA		1					*	23	8
			5330-290-9391	AN123924	<88044>	.PACKING,PREFORMED.....		EA		1					*	23	9
P	D		1560-303-2568	S1635-20098	<78286>	.BUSHING ASSEMBLY,HOUSING....		EA		1					*	23	10
			5305-638-6448	S1635-20096	<78286>	.SETSCREW RPL-BY..... 5305-534-4106										23	
P	D		5305-534-4106	S1635-20096-1	<78286>	.SETSCREW.....NOTE 1		EA		1					*	23	11
P	D		5310-698-5440	S1635-20061	<78286>	.NUT,PLAIN,ROUND.....		EA		1					*	23	12
			1560-438-2103	S12-35-4113	<78286>	.BREATHER ASSEMBLY,MAIN..... TRANSMISSION RPL-BY PN S1635-20149		EA			*	*	*			23	
AO	O			S1635-20149	<78286>	.BREATHER ASSEMBLY,MAIN..... TRANSMISSION RPLS-- 1560-438-2103		EA		1						23	13
			4730-287-1024	AN822-8D	<88044>	..ELBOW,PIPE TO TUBE.....		EA		1	*	*	*		*	23	14
P	O		1560-567-1110	S1635-20149-1	<78286>	..TUBE ASSEMBLY,BREATHER,.... MAIN TRANSMISSION		EA		1	*	2	2		*	23	15
P	D		1560-509-4633	S1635-20058-2	<78286>	.RING,GEAR BOX,MAIN..... ATTACHING PARTS		EA		1					*	23	16
			5306-180-2751	AN5H12	<88044>	.BOLT,MACHINE.....		HD		25					*	23	17
			5310-167-0820	AN960-516	<88044>	.WASHER.....		HD		25					*	23	
			5310-088-0553	MS21044N5	<96906>	.NUT,SELF-LOCKING,HEXAGON....		HD		25					*	23	17A
			5310-088-0553	MS21044N5	<96906>	.NUT,SELF-LOCKING,HEXAGON....		HD		11					REF	23	18
						---*---											
P	D		1560-315-6334	S1635-20080-1	<78286>	.GASKET RPLS-- 1560-320-6942		EA		1					REF	23	19
AD	D			S1635-20007-2	<78286>	.SHAFT AND PLANETARY..... ASSEMBLY SEE FIG.24 FOR BREAKDOWN		EA		1						23	20
P	D		1560-303-2576	S1635-20121	<78286>	.PLATE,RETAINING..... ATTACHING PARTS		EA		1					*	23	21
			5306-639-2382	AN104041	<88044>	.BOLT,MACHINE.....		EA		16					*	23	22
			5310-950-0039	MS21044N6	<96906>	.NUT,SELF-LOCKING,HEXAGON....		HD		16					*	23	22A
						---*---											
P	D		1560-591-6796	S1635-20082-1	<78286>	.SHIM.....NOTE 1		EA		1						23	23
		U	3110-275-0136	MCS32003	<51600>	.BEARING,ROLLER,CYLINDRICAL.. RPL-BY 3110-585-3684		EA								23	
P	D	U	3110-585-3684	SB2303-1	<78286>	.BEARING,ROLLER,CYLINDRICAL.. RPLS-- 3110-275-0136		EA		1					100	23	24
			3110-275-0210	SB1355-1	<78286>	.BEARING,BALL,ANNULAR..... RPL-BY 3110-018-4036										23	
P	D	U	3110-018-4036	SB1355-2	<78286>	.BEARING,BALL,ANNULAR..... RPLS-- 3110-275-0210		EA		1					100	23	25
P	D		1615-317-0851	S1635-20174	<78286>	.RING,RETAINING-MAIN GEAR.... BOX TRANSMISSION UPPER HOUSING		EA		1					*	23	26
P	D		1560-303-2584	S1635-20140	<78286>	.CLIP.....		EA		4					*	23	27

(1) SOURCE, MAINT AND REC CODE (a) SOURCE CODE	(b) MAINT LEVEL	(c) REC CODE	(2) FEDERAL STOCK NUMBER	REFERENCE NUMBER	(3) DESCRIPTION	MODELS USABLE ON CH-34C	(4) UNIT OF ISSUE	(5) QTY INC IN UNIT PACK	(6) QTY INC IN UNIT	(7) 30-DAY DS/GS MAINT ALW (a) 1-20	(b) 21-50	(c) 51-100	(8) 1-YR ALW PER 100 EQUIP CNTGCY	(9) DEPOT MAINT ALW PER 100 EQUIP	(10) ILLUSTRATION (a) FIG NO	(b) ITEM NO
					CONTINUED										23	27
					ATTACHING PARTS											
			5305-150-9520	AN502-416-6 <88044>	.SCREW,MACHINE.....		HD		8					*	23	28
			5310-141-1795	AN960-416 <88044>	.WASHER,FLAT.....		HD		4					*	23	
					---*---											
P	D	U	3110-585-3685	SB2052-1 <78286>	.BEARING,ROLLER,CYLINDRICAL..		EA		1					100	23	29
			1560-303-2541	S1635-20004 <78286>	.LINER AND STUD ASSEMBLY.....										23	
					UPPER HOUSING RPL-BY											
					1560-631-5751											
			1560-694-4760	S1635-20004-1 <78286>	.LINER AND STUD ASSEMBLY.....										23	
					UPPER HOUSING RPL-BY											
					1560-631-5751											
P	D		1560-631-5751	S1635-20004-2 <78286>	.LINER,STUD ASSEMBLY.....		EA		1					*	23	30
					RPLS-- 1560-303-2541 &											
					1560-694-4760											
			5330-514-3289	MS35769-21 <96906>	..GASKET.....		LL		1	4	11	22		*	23	32
P	D		5340-664-9959	S1635-20097 <78286>	..INSERT,SCREW THREAD.....		EA		1					*	23	34
P	D		1560-308-0164	S1635-20108 <78286>	..PLUG.....		EA		2					*	23	35
P	D		1560-662-6464	S1635-20112 <78286>	..BEARING,SLEEVE.....		EA		4					*	23	36
P	D		1615-662-6462	S1635-20083 <78286>	..BUSHING,SLEEVE.....		EA		6					*	23	37
P	D		1560-303-2554	S1635-20040 <78286>	..LINER.....		EA		1					*	23	38
P	D		1560-303-2553	S1635-20039 <78286>	..LINER.....		EA		1					*	23	39
					NOTE 1											
					COMPONENT OF KIT											
					1560-715-2262 WHICH APPEARS											
					IN FIG.22											
AD	D			S1635-20007-2 <78286>	SHAFT AND PLANETARY.....		EA								24	
					ASSEMBLY SEE FIG.23											
					FOR NHA											
			5305-638-6448	S1635-20096 <78286>	.SETSCREW RPL-BY.....										24	
					5305-534-4106											
P	D		5305-534-4106	S1635-20096-1 <78286>	.SETSCREW.....NOTE 1		EA		1					REF	24	2
			5310-698-5441	S1635-20062 <78286>	.NUT,SELF-LOCKING,ROUND.....										24	
					RPL-BY 1615-310-5373											
P	D		1615-310-5373	S1635-20062-1 <78286>	.LOCKNUT,TRANSMISSION.....		EA		1					*	24	3
					RPLS-- 5310-698-5441											
			5306-579-3372	AN104149 <88044>	.BOLT,MACHINE.....		EA		5					*	24	5
			5310-088-0552	MS21044N7 <96906>	.NUT,SELF-LOCKING,HEXAGON....		EA		5					*	24	5A
P	D		1615-614-5138	S1635-20085-1 <78286>	.SPACER,PLATE.....		EA		1					*	24	6
P	D		5315-290-5265	S1635-20057-1 <78286>	.PIN,STRAIGHT,HEADLESS.....		EA		10					*	24	7
P	D		1615-517-9368	S1635-20056 <78286>	.SPACER,SLEEVE.....		EA		5					*	24	8
P	D		1560-303-2557	S1635-20065 <78286>	.SLINGER-OIL.....		EA		1					*	24	9
P	D		1560-303-2556	S1635-20059-2 <78286>	.SHAFT AND PLUG ASSEMBLY.....		EA		1						24	10
P	D		8125-663-2987	S1635-20153 <78286>	..STOPPER,BOTTLE.....		EA		1					*	24	11
P	D		8125-663-2989	S1635-20154 <78286>	..STOPPER,BOTTLE.....		EA		1					*	24	12
			1560-303-2543	S1635-20006-1 <78286>	.PLANETARY RPL-BY.....										24	

(1) SOURCE, MAINT AND REC CODE (a) SOURCE CODE	(b) MAINT LEVEL	(c) REC CODE	(2) FEDERAL STOCK NUMBER	REFERENCE NUMBER	(3) DESCRIPTION	MODELS USABLE ON CH-34C	(4) UNIT OF ISSUE	(5) QTY INC IN UNIT PACK	(6) QTY INC IN UNIT	(7) 30-DAY DS/GS MAINT ALW (a) 1-20	(b) 21-50	(c) 51-100	(8) 1-YR ALW PER 100 EQUIP CNTGCY	(9) DEPOT MAINT ALW PER 100 EQUIP	(10) ILLUSTRATION (a) FIG NO	(b) ITEM NO
P	F		1615-313-0543	S1535-20158	<78286> .GASKET,MAIN TRANSMISSION,... OIL PUMP HOUSING AND COVER		EA		1	*	2	2		*	25	18
P	F		1615-653-5864	S1535-20158-3	<78286> .GASKET,MAIN TRANSMISSION....		EA		1	*	*	2		*	25	19
			1560-765-7903	S1535-20158-4	<78286> .GASKET,MAIN TRANSMISSION.... NOTE 1		EA		1	2	4	8			25	19A
P	F		1615-706-1039	S1535-20157-2	<78286> .GASKET,MAIN TRANSMISSION.... NOTE 1		EA		1	2	3	5		*	25	19B
			1615-327-3817	S1535-20123	<78286> .GEAR,SPUR RPL-BY..... 1615-611-6554										25	
			1615-528-0755	S1535-20123-1	<78286> .GEAR,SPUR RPL-BY..... 1615-611-6554										25	
P	D		1615-611-6554	S1535-20123-2	<78286> .GEAR,SPUR RPLS--..... 1615-327-3817, 1615-528-0755		EA		1					*	25	20
			1560-305-4144	S1535-20214	<78286> .GEAR,MAIN TRANSMISSION..... DRIVEN OIL PUMP RPL-BY 1560-325-9920										25	
P	F		1560-325-9920	S1535-20214-1	<78286> .GEAR,MAIN BOX RPLS--..... 1560-305-4144		EA		1	*	*	*		*	25	21
P	H		1615-509-0495	S1635-20014-3	<78286> .HOUSING AND LINER ASSEMBLY..		EA		1	*	*	*		*	25	22
P	H		5315-333-6839	S14-35-4101	<78286> ..PIN,DOWEL,LOWER.....		EA		2	*	*	*		*	25	23
			1560-662-7079	S1635-20156	<78286> ..BEARING,SLEEVE RPL-BY..... 1615-628-5251										25	
			1560-662-8088	S1635-20156-1	<78286> ..BEARING,SLEEVE RPL-BY..... 1615-628-5251										25	
P	D		1615-628-5251	S1635-20156-2	<78286> ..BEARING,SLEEVE RPLS--..... 1560-662-7079, 1560-662-8088		EA		1					100	25	24
P	H		1560-304-4583	S1535-20171	<78286> ..SHAFT.....		EA		1	*	*	*		*	25	25
X1				S1635-20172	<78286> ..HOUSING-OIL PUMP DRIVEN....		EA		1						25	26
			1615-613-3061	S1535-20157-1	<78286> .GASKET,REAR COVER AND OIL... PUMP HOUSING,MAIN RPL-BY 1615-706-1039		EA		1						25	
P	F		1615-706-1039	S1535-20157-2	<78286> .GASKET,MAIN TRANSMISSION.... RPLS--1615-613-3061 NOTE 1		EA		1	REF	REF	REF		REF	25	27
P	D		1560-304-4584	S1535-20215-1	<78286> .SLEEVE.....		EA		1					*	25	28
			5330-285-9842	MS28778-10	<96906> .PACKING,PREFORMED U/W..... 4730-203-3914		EA		1	6	14	28	334	*	25	29
			5330-579-3163	MS28775-214	<96906> .PACKING,PREFORMED U/W..... 4730-289-6448		EA		1	*	*	*		*	25	
P	O		4730-824-2044	A7213W	<97484> .PLUG,MACHINE THREAD,MAGNETIC		EA		1	2	4	9		*	25	30
P	O		4730-203-3914	A722	<97484> .PLUG,MACHINE THREAD,..... MAGNETIC U/O PN S1635-20001-17, NOTE 3		EA		1	*	2	2		*	25	30
			4730-289-6448	A720	<97484> .PLUG,MACHINE THREAD,..... MAGNETIC OBS-AFT-CMPL-W MWO 55-1520-202-34/32										25	
			5330-804-5695	MS28778-6	<96906> ..PACKING,PREFORMED.....		EA		1	REF	REF	REF		*	25	
P	O		2925-994-8684	A7175W	<97484> .CHIP DETECTOR.....		EA		1	*	2	2	26	*	25	
P	O		5935-878-2754	MS3108R12S5S	<96906> .CONNECTOR,PLUG,ELECTRICAL... U/W 2925-994-8684		EA		1	*	2	2		*	25	
			5340-598-5417	AN3420-3	<88044> .BUSHING,RUBBER.....		EA		1	*	*	*		*	25	

(1) SOURCE, MAINT AND REC CODE (a) SOURCE CODE	(b) MAINT LEVEL	(c) REC CODE	(2) FEDERAL STOCK NUMBER	REFERENCE NUMBER		(3) DESCRIPTION	MODELS USABLE ON CH-34C	(4) UNIT OF ISSUE	(5) QTY INC IN UNIT PACK	(6) QTY INC IN UNIT	(7) 30-DAY DS/GS MAINT ALW (a) 1-20	(b) 21-50	(c) 51-100	(8) 1-YR ALW PER 100 EQUIP CNTGCY	(9) DEPOT MAINT ALW PER 100 EQUIP	(10) ILLUSTRATION (a) FIG NO	(b) ITEM NO
P	D		6685-373-9004	MS28034-1	<96906>	.TRANSMITTER,TEMPERATURE.....		EA		1					*	25	31
			5330-815-9489	MS35769-11	<96906>	.GASKET.....		EA		1	22	56	112		*	25	32
			5330-579-8156	MS28775-212	<96906>	.PACKING,PREFORMED U/W..... 1560-091-3829		EA		1	*	*	*		*	25	33
			5330-514-3289	AN900-16	<88044>	.GASKET U/W 1615-511-9520...		LL		1	REF	REF	REF		*	25	
			1615-091-3829	S1535-20179	<78286>	.SCREEN ASSEMBLY RPL-BY..... 1615-511-9520										25	
P	F		1615-511-9520	S1535-20179-1	<78286>	.SCREEN ASSEMBLY,MAIN..... TRANSMISSION RPLS-- 1560-091-3829		EA		1	*	*	*		*	25	34
			5315-234-1864	MS24665-302	<96906>	.PIN,COTTER.....		HD		1					*	25	35
P	D		5310-639-2596	S1635-20078	<78286>	.NUT,PLAIN,ROUND.....		EA		1					*	25	36
P	D		1560-303-2552	S1635-20035	<78286>	.FLANGE,HOUSING,GEAR BOX.....		EA		1					*	25	37
			5330-474-8539	65X1471	<73680>	.SEAL,PLAIN ENCASED RPL-BY.. 5330-855-7783										25	
P	F		5330-855-7783	21708-1471	<73680>	.SEAL,PLAIN ENCASED..... RPLS-- 5330-474-8539		EA		1	2	4	7		*	25	38
			5330-474-8538	EAB501	<81996>	.OIL SEAL..... RPL-BY 5330-773-2650										25	
P	F		5330-773-2650	65X143	<73680>	.SEAL,HOUSING ASSEMBLY..... RPLS-- 5330-474-8538		EA		1	*	*	*		*	25	39
			5330-474-8896	EAB531	<81996>	.OIL SEAL.....		EA		1	*	*	*		*	25	40
P	O		5330-855-8257	21704-0357	<73680>	.SEAL,PLAIN,ENCASED.....		EA		1	*	*	*		*	25	
P	F		1560-768-2594	65X67	<73680>	.SEAL..... -ALTERNATE-		EA		1	*	2	2		*	25	41
P	F		5330-474-8898	63X67	<73680>	.OIL SEAL.....		EA		1	*	*	*			25	
			5330-474-8534	EAB521	<81996>	.OILSEAL RPL-BY 1560-780-2699										25	
			1560-631-3701	D65X255	<76700>	.SEAL,HOUSING AND LINER..... ASSEMBLY RPL-BY 1560-780-2699										25	
P	F		5330-297-4424	21711-0255	<73680>	.OILSEAL RPLS--..... 1560-631-3701, 5330-297-4424,& 5330-474-8534		EA		2	*	*	*		*	25	42
			1615-703-8950	S1635-20120-2	<78286>	.COVER ASSEMBLY,HOUSING..... SEE FIG.29 FOR BREAKDOWN				1						25	
P	D		1615-570-9766	S1635-20120-6	<78286>	.COVER ASSEMBLY,HOUSING..... ATTACHING PARTS		EA		1					*	25	43
			5310-194-0636	MS9320-11	<96906>	.WASHER,THRUST.....		EA		29					*	25	44
			5310-088-0553	MS21044N5	<96906>	.NUT,SELF-LOCKING,HEXAGON.... ---*---		HD		29					*	25	
			1560-520-6317	S1635-20123-1	<78286>	.GASKET.....NOTE 1		EA		1						25	45
P	D		1560-805-4891	S1635-20208	<78286>	.FLINGER,MAIN GEAR.....		EA		1					*	25	46
			1615-327-3911	S1635-20034	<78286>	.GEAR,SPUR RPL-BY..... 1615-601-0581										25	
P	D		1615-601-0581	S1635-20209	<78286>	.GEAR,SPUR RPLS--..... 1560-327-3911		EA		1					*	25	47
			3110-624-3616	S81051-1	<78286>	.BEARING,BALL,ANNULAR..... RPL-BY 3110-627-7833										25	
P	D		3110-627-7833	S81051-2	<78286>	.BEARING,BALL,ANNULAR..... RPLS-- 3110-624-3616		EA		2					100	25	48
P	D		1615-611-6557	S1635-20148-3	<78286>	.GEAR,OIL PUMP.....		EA		1					*	25	50

(1) SOURCE, MAINT AND REC CODE (a) SOURCE CODE	(b) MAINT LEVEL	(c) REC CODE	(2) FEDERAL STOCK NUMBER	REFERENCE NUMBER	(3) DESCRIPTION	MODELS USABLE ON CH-34C	(4) UNIT OF ISSUE	(5) QTY INC IN UNIT PACK	(6) QTY INC IN UNIT	(7) 30-DAY DS GS MAINT ALW (a) 1-20	(b) 21-50	(c) 51-100	(8) 1-YR ALW PER 100 EQUIP CNTGCY	(9) DEPOT MAINT ALW PER 100 EQUIP	(10) ILLUSTRATION (a) FIG NO	(b) ITEM NO
P	D	U	3110-627-7831	SB1050-2	<78286> .BEARING,BALL,ANNULAR.....		EA		1					*	25	51
P	D	U	3110-627-7831	SB1050-2	<78286> .BEARING,BALL,ANNULAR.....		EA		1					REF	25	52
			1615-569-6105	S1635-20093	<78286> .GEAR,SPUR RPL-BY..... 1560-611-6553										25	
P	D		1615-611-6553	S1635-20093-2	<78286> .GEAR,SPUR RPLS--..... 1615-569-6105		EA		1					*	25	53
P	D		5310-596-9503	S1635-20128	<78286> .WASHER,SPRING TENSION.....		EA		1					*	25	54
P	D		3110-627-7833	SB1051-2	<78286> .BEARING,BALL,ANNULAR..... RPLS-- 3110-624-3616		EA		1					REF	25	55
			3110-624-3617	SB1052-1	<78286> .BEARING,BALL,ANNULAR..... RPL-BY 3110-627-7835										25	
P	D	U	3110-627-7835	SB1052-2	<78286> .BEARING,BALL,ANNULAR..... RPLS-- 3110-275-0128, 3110-624-3617		EA		1					100	25	56
P	D		1615-203-6359	S1635-20159	<78286> .DEFLECTOR,DIRT AND LIQUID...		EA		1					*	25	57
P	D		1615-317-0850	S1635-20131-1	<78286> .GEAR AND SHAFT ASSEMBLY.....		EA		1					*	25	58
			5315-682-2056	MS9048-102	<96906> ..PIN, SPRING.....		EA								25	
			5315-826-3251	MS16562-223	<96906> ..PIN,SPRING.....		EA		1						25	59
X1				S1635-20094-2	<78286> ..GEAR-BLOWER.....		EA		1						25	61
P	D	U	3110-627-7831	SB1050-2	<78286> .BEARING,BALL,ANNULAR.....		EA		1					REF	25	62
P	D	U	3110-627-7831	SB1050-2	<78286> .BEARING,BALL,ANNULAR.....		EA		1					REF	25	63
P	D		1560-611-6555	S1635-20077-3	<78286> .GEAR,MAIN RPLS--..... 1560-994-7576		EA		1					*	25	64
			3110-585-3372	SB1054-1	<78286> .BEARING,BALL,ANNULAR..... RPL-BY 3110-620-2820										25	
P	D	U	3110-620-2820	SB1054-2	<78286> .BEARING,BALL,ANNULAR..... RPLS-- 3110-585-3372		EA		1					*	25	65
P	D		1560-203-6361	S1635-20158	<78286> .DEFLECTOR,DIRT AND LIQUID...		EA		1					*	25	66
			5310-286-3183	S1635-20127	<78286> .WASHER,SPRING TENSION.NOTE 1		EA		1						25	67
P	D	U	3110-627-7831	SB1050-2	<78286> .BEARING,BALL,ANNULAR.....		EA		1					REF	25	68
P	D		1560-348-9967	S1635-20092-1	<78286> .GEAR,SPUR.....		EA		1					*	25	69
P	D	U	3110-627-7831	SB1050-2	<78286> .BEARING,BALL,ANNULAR.....		EA		1					REF	25	70
P	D		1615-203-6358	S1635-20157	<78286> .DEFLECTOR,DIRT AND LIQUID... RPLS-- 1560-303-2585		EA		1					*	25	71
			5310-286-3183	S1635-20127	<78286> .WASHER,SPRING TENSION.NOTE 1		EA		1						25	72
P	D	U	3110-627-7831	SB1050-2	<78286> .BEARING,BALL,ANNULAR.....		EA		1					REF	25	73
P	D		1560-334-6362	S1635-20076-2	<78286> .GEAR,SPUR.....		EA		1					*	25	74
			3110-624-3618	SB1053-1	<78286> .BEARING,BALL,ANNULAR..... RPL-BY 3110-627-7837										25	
P	D	U	3110-627-7837	SB1053-2	<78286> .BEARING,BALL,ANNULAR..... RPLS-- 3110-624-3618		EA		1					*	25	75
P	D		1615-203-6360	S1635-20160	<78286> .DEFLECTOR,DIRT AND LIQUID...		EA		1					*	25	76
P	D	U	3110-627-7837	SB1053-2	<78286> .BEARING,BALL,ANNULAR..... RPLS-- 3110-624-3618		EA		1					REF	25	77
P	D		1615-203-6360	S1635-20160	<78286> .DEFLECTOR,DIRT AND LIQUID...		EA		1					REF	25	78
P	D		1560-305-4154	S1635-20075-2	<78286> .GEAR,MAIN GEAR BOX.....		EA		1					*	25	79
			5306-182-1851	AN5H5	<88044> .BOLT,MACHINE.....		HD		8					*	25	80
			5310-194-0636	MS9320-11	<96906> .WASHER,THRUST.....		EA		8					*	25	
P	D		1615-672-7374	S1635-20190	<78286> .RING.....		EA		1					*	25	81
			1560-303-2573	S1635-20118	<78286> .SHIM,HOUSING.....NOTE 1		EA		1						25	82
P	D		1560-303-2561	S1635-20081	<78286> .SHIM,HOUSING.....		EA		1					*	25	83
P	D		3110-624-3495	SB3201A1	<78286> .CONE AND ROLLERS,TAPERED....		EA		1					100	25	84

(1) SOURCE, MAINT AND REC CODE (a) SOURCE CODE	(b) MAINT LEVEL	(c) REC CODE	(2) FEDERAL STOCK NUMBER	REFERENCE NUMBER		(3) DESCRIPTION	MODELS USABLE ON CH-34C	(4) UNIT OF ISSUE	(5) QTY INC IN UNIT PACK	(6) QTY INC IN UNIT	(7) 30 DAY DS/GS MAINT ALW (a) 1-20	(b) 21-50	(c) 51-100	(8) 1-YR ALW PER 100 EQUIP CNTGCY	(9) DEPOT MAINT ALW PER 100 EQUIP	(10) ILLUSTRATION (a) FIG NO	(b) ITEM NO
						CONTINUED										25	84
						ROLLER BEARING											
P	D		1560-303-2583	S1635-20135	<78286>	.PINION ASSEMBLY,HOUSING.....		EA		1					*	25	85
P	D		1615-332-3545	S1635-20122-1	<78286>	..PLUG,TRANSMISSION PINION...		EA		1					*	25	86
			3110-275-0044	LL205449	<60038>	.CONE AND ROLLERS,TAPERED....		EA								25	
						ROLLER BEARING OBS-BY											
						3110-624-3511											
P	D		3110-624-3511	SB3206A1	<78286>	.CONE AND ROLLERS,TAPERED....		EA		1					100	25	87
						ROLLER BEARING OBSLTS											
						3110-275-0044											
P	D		3110-624-3510	SB3206B1	<78286>	.CUP,TAPERED ROLLER BEARING..		EA		1					100	25	88
P	D		3110-624-3494	SB3201B1	<78286>	.CUP,TAPERED ROLLER BEARING..		EA		1					100	25	89
P	D		1560-304-4612	S1635-20031	<78286>	.SLEEVE,HOUSING.....		EA		1					*	25	90
AD	D			S1635-20010-9	<78286>	.SUPPORT AND SHAFT ASSEMBLY..		EA		1						25	91
						SEE FIG.26 FOR BREAKDOWN											
			1560-304-4613	S1635-20079	<78286>	.SHIM RPL-BY 1560-566-4303..										25	
P	D		1560-566-4303	S1635-20079-1	<78286>	.SHIM RPLS-- 1560-304-4613..		EA		1					*	25	92
						NOTE 1											
			5310-184-8974	MS9320-12	<96906>	.WASHER,THRUST.....		EA		12					*	25	93
			5310-950-0039	MS21044N6	<96906>	.NUT,SELF-LOCKING,HEXAGON....		HD		12					*	25	
			1560-303-2589	S1635-20165	<78286>	.SHIM,HOUSING RPL-BY.....										25	
						1560-565-3628											
P	D		1560-565-3628	S1635-20165-1	<78286>	.SHIM RPLS-- 1560-303-2589..		EA		1					*	25	94
						NOTE 1											
			1560-658-2902	S1635-20095-1	<78286>	.SEAL,MAIN GEAR BOX....NOTE 2		EA		1						25	95
AD	D			S1635-20003-2	<78286>	.HOUSING AND GEAR ASSEMBLY...		EA		1						25	96
						SEE FIG.27 FOR BREAKDOWN											
			1615-564-1513	S1635-20084-5	<78286>	.LINER AND STUD ASSEMBLY.....		EA		1						25	
						OBS-BY 1560-659-1110											
						SEE FIG.30 FOR BREAKDOWN											
P	D		1560-659-1110	S1635-20084-7	<78286>	.HOUSING ASSEMBLY.....		EA		1					*	25	97
						OBSLTS 1560-323-4355,											
						1560-564-1514,											
						1560-591-0550,											
						1560-601-5733,											
						1560-694-4763,E											
						1615-564-1513											
						NOTE 1											
						COMPONENT OF KIT											
						1560-715-2262 WHICH APPEARS											
						IN FIG.22											
						NOTE 2											
						COMPONENT OF KIT											
						1560-715-2263 WHICH APPEARS											
						IN FIG.22											
						NOTE 3											
						COMPONENT OF KIT											
						1560-715-2258 WHICH APPEARS											
						IN FIG.158											

(1) SOURCE, MAINT AND REC CODE (a) SOURCE CODE	(b) MAINT LEVEL	(c) REC CODE	(2) FEDERAL STOCK NUMBER	REFERENCE NUMBER		(3) DESCRIPTION	MODELS USABLE ON CH-34C	(4) UNIT OF ISSUE	(5) QTY INC IN UNIT PACK	(6) QTY INC IN UNIT	(7) 30-DAY DS GS MAINT ALW (a) 1-20	(b) 21-50	(c) 51-100	(8) 1-YR ALW PER 100 EQUIP CNTGCY	(9) DEPOT MAINT ALW PER 100 EQUIP	(10) ILLUSTRATION (a) FIG NO	(b) ITEM NO
AD	D			S1635-20010-9	<78286>	SUPPORT AND SHAFT ASSEMBLY... SEE FIG.25 FOR NHA		EA								26	
			1560-303-2572	S1635-20113	<78286>	.JET ASSEMBLY OBS-BY..... 1560-672-3540										26	
P	D		1560-672-3540	S1635-20113-3	<78286>	.JET ASSEMBLY OBSLTS..... 1560-303-2572 ATTACHING PARTS		EA		2					*	26	1
			5310-167-0835	AN960-416L	<88044>	.WASHER,FLAT.....		HD		8					*	26	2
			5310-543-4443	MS20364-428A	<96906>	.NUT,SELF-LOCKING,HEXAGON.... ---*---		HD		8					*	26	
			1615-527-6289	S1635-20114	<78286>	.GASKET.....NOTE 1		EA		2						26	4
			5306-846-4772	NAS144A18	<80205>	.BOLT,INTERNAL WRENCHING.....		EA		1					*	26	5
			5310-176-8108	AN320-4	<88044>	.NUT,SLOTTED,HEXAGON.....		HD		1					*	26	
			5315-234-1856	MS24665-155	<96906>	.PIN,COTTER.....		HD		1					*	26	
P	D		5340-697-8465	S1635-20099	<78286>	.RING,RETAINING.....		EA		1					*	26	6
			1560-307-3638	S1635-20046	<78286>	.GEAR,SUN,TRANSMISSION..... OBS-BY 1560-330-6178										26	
P	D		1560-330-6178	S1635-20046-2	<78286>	.GEAR,SUN,MAIL GEAR..... OBSLTS 1560-307-3638		EA		1					*	26	7
			5306-639-7587	MS20006-20	<96906>	.BOLT,INTERNAL WRENCHING.....		EA		8					*	26	8
			5310-149-9146	MS20002C6	<96906>	.WASHER,RECESSED.....		HD		8					*	26	
			5310-950-0039	MS21044N6	<96906>	.NUT,SELF-LOCKING,HEXAGON....		HD		8					*	26	8A
P	D		1615-554-1089	S1635-20175	<78286>	.SPACER,SLEEVE.....		EA		8					*	26	9
			1560-303-2582	S1635-20133	<78286>	.SHIELD,OIL USE UNTIL..... EXHAUSTED NO REPLACEMENT		EA		1						26	11
P	D		1560-327-3910	S1635-20029	<78286>	.GEAR,BEVEL,GEAR BOX.....		EA		1					*	26	14
P	D		1615-303-2571	S1635-20110	<78286>	.SHIM,TRANSMISSION SHAFT..... NOTE 1		EA		1					*	26	15
			5310-698-5437	S1635-20044	<78286>	.NUT,PLAIN,ROUND RPL-BY..... 5310-505-8490										26	
			5310-208-8942	S1635-20182	<78286>	.NUT,PLAIN,ROUND RPL-BY..... 5310-505-8490										26	
P	D		5310-505-8490	S1635-20182-1	<78286>	.NUT,PLAIN,ROUND RPLS--..... 5310-208-8942, 5310-698-5437		EA		1					*	26	16
P	D	U	3110-624-3503	SB3601A1	<78286>	.CONE AND ROLLERS,TAPERED.... ROLLER BEARING RPLS-- 3110-275-0104		EA		1					100	26	17
P	D	U	3110-624-3502	SB3601B1	<78286>	.CUP,TAPERED ROLLER BEARING..		EA		1					100	26	18
			1615-662-6735	S1635-20043	<78286>	.SPACER,RING RPL-BY..... 1560-604-0952										26	
P	D		1615-604-0952	S1635-20043-15	<78286>	.SPACER,RING RPLS--..... 1560-662-6735		EA		1					*	26	19
AD	D			S1635-20005-2	<78286>	.BRIDGE SUPPORT ASSEMBLY..... ATTACHING PARTS		EA		1						26	20
			5340-990-9301	EAB700D7	<81996>	.CLAMP,LOOP.....		EA		2					*	26	
			5305-150-9212	AN502-10-8	<88044>	.SCREW,MACHINE..... ---*---		HD		2					*	26	
P	D		1560-565-5622	S1635-20008	<78286>	..OIL TUBE ASSEMBLY,MAIN..... TRANSMISSION		EA		2					*	26	
			5340-990-9301	EAB700D7	<81996>	..CLAMP,LOOP.....		EA		2					*	26	
P	D		1560-571-6233	S1635-20005-3	<78286>	..BEARING SUPPORT ASSEMBLY...		EA		1					*	26	

(1) SOURCE, MAINT AND REC CODE (a) SOURCE CODE	(b) MAINT LEVEL	(c) REC CODE	(2) FEDERAL STOCK NUMBER	REFERENCE NUMBER		(3) DESCRIPTION	MODELS USABLE ON CH-34C	(4) UNIT OF ISSUE	(5) QTY INC IN UNIT PACK	(6) QTY INC IN UNIT	(7) 30-DAY DS/GS MAINT ALW (a) 1-20	(b) 21-50	(c) 51-100	(8) 1-YR ALW PER 100 EQUIP CNTGCY	(9) DEPOT MAINT ALW PER 100 EQUIP	(10) ILLUSTRATION (a) FIG NO	(b) ITEM NO
			5305-150-9212	AN502-10-8	<88044>	..SCREW,MACHINE.....		HD		2					*	26	
P	D		5306-638-2650	S1535-20210	<78286>	..BOLT,MACHINE.....		EA		2					20	26	
P	D		4730-278-5823	AN779D8	<88044>	..CONNECTOR,MULTIPLE.....		EA		2					*	26	
			5310-171-6990	AN901-8A	<88044>	..GASKET.....		EA		4					*	26	
			1560-576-9690	S1635-20187	<78286>	..SHIM.....NOTE 1		EA		2					*	26	
P	D		1560-565-5622	S1635-20008	<78286>	..OIL TUBE ASSEMBLY,MAIN..... TRANSMISSION		EA		2					REF	26	21
P	D		5306-638-2650	S1535-20210	<78286>	..BOLT,MACHINE.....		EA		2					REF	26	22
			1560-576-9690	S1635-20187	<78286>	..SHIM,MAIN GEAR BOX...NOTE 1		EA		2						26	23
			5310-171-6990	AN901-8A	<88044>	..GASKET.....		EA		2					*	26	24
P	D		4730-278-5823	AN779D8	<88044>	..CONNECTOR,MULTIPLE...NOTE 1		EA		2					*	26	25
P	D		5340-291-7685	S12-35-7037	<78286>	..DISK,SOLID,PLAIN.....		EA		2					*	26	26
P	D		1560-571-6233	S1635-20005-3	<78286>	..BEARING SUPPORT ASSEMBLY...		EA		1					REF	26	27
P	D		5310-200-7749	RL24SB7	<83324>	...RING,LOCK,SERRATED.....		HD		8					REF	26	28
P	D		1615-098-8279	S1635-20037	<78286>	...LINER,SUPPORT,SHAFT.....		EA		2					*	26	29
P	D	U	3110-624-3503	SB3601A1	<78286>	.CONE AND ROLLERS,TAPERED.... ROLLER BEARING		EA		1					REF	26	30
P	D	U	3110-624-3502	SB3601B1	<78286>	.CUP,TAPERED ROLLER BEARING..		EA		1					REF	26	31
			1560-326-3489	S1635-2002_	<78286>	.GEAR,BEVEL OBS-BY..... 1560-620-5614										26	
			1560-611-6556	S1635-20023-2	<78286>	.GEAR,BEVEL OBS-BY..... 1560-620-5614										26	
P	D		1560-620-5614	S1635-20023-3	<78286>	.GEAR,BEVEL OBSLTS..... 1560-326-3489, 1560-611-6556		EA		1					*	26	32
			1560-330-6174	S1635-20013-2	<78286>	.SPLINED SHAFT ASSEMBLY..... RPL-BY 1560-330-6176										26	
P	D		1560-330-6176	S1635-20013-4	<78286>	.SPLINED SHAFT ASSEMBLY..... RPLS-- 1560-303-2546, 1560-330-6174		EA		1					*	26	33
P	D		5315-582-3493	S1635-20184-1	<78286>	..PIN,STRAIGHT,HEADLESS.....		EA		3					*	26	34
			1560-662-8143	S1635-20115	<78286>	..BEARING,SLEEVE RPL-BY..... 1560-662-5898										26	
P	D		1560-662-5898	S1635-20115-2	<78286>	..BEARING,SLEEVE RPLS--..... 1560-662-8143		EA		1					*	26	35
						NOTE 1 COMPONENT OF KIT 1560-715-2262 WHICH APPEARS IN FIG.22											
AD	D			S1635-20003-2	<78286>	HOUSING AND GEAR ASSEMBLY.... SEE FIG.25 FOR NHA		EA								27	
			5315-234-1864	MS24665-302	<96906>	.PIN,COTTER.....		HD		1	*	*	*		*	27	1
P	F		5310-637-1260	S1635-20027	<78286>	.NUT,PLAIN,ROUND.....		EA		1	2	3	7		*	27	2
P	F		1560-303-2551	S1635-20026-2	<78286>	.COUPLING,SPLINE.....		EA		1	*	*	*		*	27	3
			5310-141-1795	AN960-416	<88044>	.WASHER,FLAT.....		HD		8	*	*	*		*	27	
			5310-877-5796	MS21044N4	<96906>	.NUT,SELF-LOCKING,HEXAGON....		EA		8	*	*	*		*	27	4

(1) SOURCE, MAINT AND REC CODE (a) SOURCE CODE	(b) MAINT LEVEL	(c) REC CODE	(2) FEDERAL STOCK NUMBER	REFERENCE NUMBER		(3) DESCRIPTION	MODELS USABLE ON CH-34C	(4) UNIT OF ISSUE	(5) QTY INC IN UNIT PACK	(6) QTY INC IN UNIT	(7) 30-DAY DS GS MAINT ALW (a) 1-20	(b) 21-50	(c) 51-100	(8) 1-YR ALW PER 100 EQUIP CNTGCY	(9) DEPOT MAINT ALW PER 100 EQUIP	(10) ILLUSTRATION (a) FIG NO	(b) TEM NO
P	D		1560-303-2548	S1635-20016	<78286>	.CAP ASSEMBLY,HOUSING,MAIN... GEAR BOX INPUT		EA		1					*	27	5
P	D		1615-303-2550	S1635-20022	<78286>	..LINER,MAIN GEAR BOX.....		EA		1					*	27	6
			1560-515-5675	S1635-20021	<78286>	.GASKET RPL-BY 5330-601-0300										27	
P	F		5330-601-0300	S1635-20021-1	<78286>	.GASKET RPLS-- 1560-515-5675		EA		1	2	3	7		*	27	7
			5330-474-8542	EAB560	<81996>	.OIL SEAL..... RPL-BY 5330-855-8421										27	
P	F		5330-855-8421	21708-2366	<73680>	.SEAL,PLAIN ENCASED..... RPLS-- 5330-474-8542		EA		1	*	*	*		*	27	8
P	F		1615-576-3547	S1635-20176	<78286>	.SHIM.....NOTE1		EA		2	*	*	2		*	27	9
P	F		5340-550-3097	S1635-20179	<78286>	.SPACER,RING.....		EA		1	*	*	2		*	27	10
P	D		3110-624-3507	SB3305A1	<78286>	.CONE AND ROLLERS,TAPERED.... ROLLER BEARING		EA		1					100	27	11
P	D		5340-286-8443	S1635-20024	<78286>	.SPACER,RING.....NOTE 1		EA		1						27	12
P	D		3110-624-3506	SB3305B1	<78286>	.CUP,TAPERED ROLLER BEARING..		EA		1					100	27	13
			3110-275-0245	97503B	<60038>	.CONE AND ROLLERS,TAPERED.... ROLLER-BEARING OBS-BY 3110-624-3508		EA								27	
P	D	U	3110-624-3508	SB3502A1	<78286>	.CONE AND ROLLERS,TAPERED.... ROLLER BEARING OBSLTS 3110-275-0245		EA		1					100	27	14
AD	D			S1635-20012-1	<78286>	.GEAR ASSEMBLY-INPUT BEVEL...		EA		1						27	15
P	D		1560-694-4761	S1635-20011-2	<78286>	..GEAR,BEVEL.....		EA		1					*	27	
			1615-994-4287	S1635-20017-3	<78286>	..PLUG ASSEMBLY,MAIN GEAR.... BOX,INPUT GEAR RPLS-- 1560-303-2549 NOTE 1		EA		1						27	16
P	D	U	3110-624-3509	SB3502B1	<78286>	.CUP,TAPERED ROLLER BEARING..		EA		1					100	27	17
			1615-303-2544	S1635-20009	<78286>	.HOUSING ASSEMBLY-INPUT..... RPL-BY 1560-620-4505										27	
P	D		1615-620-4505	S1635-20009-1	<78286>	.HOUSING ASSEMBLY-INPUT..... RPLS-- 1560-303-2544		EA		1					*	27	18
P	D		5310-200-7749	RL24SB7	<83324>	..RING,LOCK,SERRATED.....		HD		8					REF	27	19
P	D		5310-200-7749	RL24SB7	<83324>	..RING,LOCK,SERRATED.....		HD		4					REF	27	20
P	D		5307-639-7774	SF101-9SA28A	<83324>	..STUD,LOCKED IN..... NOTE 1 COMPONENT OF KIT 1560-715-2262 WHICH APPEARS IN FIG.22		EA		4					*	27	21
						COVER ASSEMBLY,MAIN..... TRANSMISSION										28	
P	F		1560-672-3564	S1535-20173-4	<78286>	COVER ASSEMBLY,MAIN..... TRANSMISSION RPLS-- 1560-699-4342 SEE FIG.25 FOR NHA		EA			*	*	*			28	
			5310-275-2016	MS20364-624A	<96906>	.NUT,SELF-LOCKING,HEXAGON.... NOTE 1		HD		1	*	*	*		*	28	1

(1) SOURCE, MAINT AND REC CODE (a) SOURCE CODE	(b) MAINT CATEGORY	(c) REC CODE	(2) FEDERAL STOCK NUMBER	REFERENCE NUMBER		(3) DESCRIPTION	MODELS USABLE ON CH-34C	(4) UNIT OF ISSUE	(5) QTY INC IN UNIT PACK	(6) QTY INC IN UNIT	(7) 30-DAY DS/GS MAINT ALW (a) 1-20	(b) 21-50	(c) 51-100	(8) 1-YR ALW PER 100 EQUIP CNTGCY	(9) DEPOT MAINT ALW PER 100 EQUIP	(10) ILLUSTRATION (a) FIG NO	(b) ITEM NO
			4730-277-6374	AN6289-3	<88044>	.LOCKNUT,TUBE FITTING.....		EA		1	*	*	*		*	28	2
			5330-835-7485	MS28778-3	<96906>	.PACKING,PREFORMED.....NOTE 1		EA		1	3	8	17		*	28	3
			5330-186-4946	MS28777-3	<96906>	.WASHER,NONMETALLIC....NOTE 1		EA		1	*	*	*		*	28	4
P	O		1560-031-5321	03S10769	<00736>	.FILTER,OIL.....NOTE 1		EA		1	*	*	*		*	28	5
			5330-599-0523	AN123898	<88044>	..PACKING,PREFORMED.....		EA		1	*	*	*		*	28	6
P	O		5310-596-8838	A16075-56	<00736>	..WASHER,FLAT.....		EA		1	2	3	7		*	28	7
P	O		2915-664-3144	A16075-79	<00736>	..SPRING,HELICAL,COMPRESSION.		EA		1	*	*	*		*	28	8
P	O		1560-520-6568	03S769-231	<00736>	..CARTRIDGE ASSEMBLY,FILTER..		EA		1	*	*	*		*	28	
P	O		5310-208-6734	A16075-164	<00736>	...NUT,HEXAGON,SPECIAL.....		EA		1	*	*	*		*	28	9
P	O		2940-353-9192	A16075-211	<00736>	...CUP,OIL,LUBRICATING.....		EA		1	*	*	*		*	28	10
P	O		2815-353-9197	B16304	<00736>	...STRAINER,ELEMENT,SEDIMENT. NOTE 1		EA		1	*	*	*		*	28	11
P	O		5340-809-9857	03FA135	<00736>	...SPACER,RING.....		EA		1	*	*	*		*	28	12
P	O		1560-699-0469	03S769-218	<00736>	...TUBE ASSEMBLY,OIL FILTER..		EA		1	*	*	*		*	28	13
P	O		1560-699-0468	03S769-158	<00736>	..CONTAINER,OIL FILTER.....		EA		1	*	*	2		*	28	
				35016C	<78286>	..PACKING,PREFORMED....NOTE 1		EA		1						28	
P	D		5340-754-1082	5000-75	<00736>	..RING,RETAINING.....		EA		1					*	28	14
P	D		2940-353-9196	A16367-213	<00736>	..SEAT,VALVE,OIL FILTER.....		EA		1					*	28	15
			3110-151-9149	27920	<00736>	..BALL..... RPL-BY 3110-100-6168										28	
P	F		3110-100-6168	10288	<80254>	..BALL,BEARING..... RPLS-- 3110-151-9149		EA		1	*	*	*		*	28	16
P	D		2915-664-7818	A16367-110	<00736>	..SPRING,HELICAL,COMPRESSION.		EA		1					*	28	17
P	F		1560-307-3573	S1535-20170	<78286>	.CAP,TRANSMISSION SYSTEM.....		EA		1	*	*	*		*	28	18
P	F		5330-641-2649	SS4422-1	<78286>	.WASHER,NONMETALLIC....NOTE 1		EA		1	*	2	2		*	28	19
			4730-277-5082	AN6289-8	<88044>	.LOCKNUT,TUBE FITTING.....		EA		1	*	*	*		*	28	20
			5330-186-1380	MS28777-8	<96906>	.WASHER,NONMETALLIC.....		LL		1	*	*	*		*	28	21
P	F		5305-298-8210	S1535-20127	<78286>	.SETSCREW.....		EA		1	*	*	*		*	28	22
P	F		1560-315-0891	S1535-20125	<78286>	.SPRING,HELICAL,COMPRESSION..		EA		1	*	*	*		*	28	23
P	F		1560-307-3572	S1535-20124	<78286>	.PLUNGER,MAIN TRANSMISSION...		EA		1	*	*	*		*	28	24
P	F		1560-340-1265	S1635-20163-2	<78286>	.COVER AND LINER ASSEMBLY.... RPLS-1560-305-1657, 1560-332-3546 OBSLTS 1560-091-4032		EA		1	*	*	*		*	28	25
P	D		1560-662-7803	S1535-20172	<78286>	..BUSHING,SLEEVE.....		EA		1					100	28	26
P	D		1560-529-8199	S1635-20068-2	<78286>	..BEARING,SLEEVE.....		EA		1					*	28	27
P	D		5310-595-9726	RL82SB12	<05683>	..RING,LOCK,SERRATED.....		EA		1					*	28	28
			5340-619-3365	RD313SB18	<83324>	..INSERT,SCREW THREAD.....		EA		1					*	28	29
P	D		5310-735-0196	RL33SB9	<83324>	..RING,LOCK,SERRATED.....		EA		1					*	28	30
P	F		5307-546-4394	S1635-20178	<78286>	..STUD,LOCKED IN.....		EA		1	*	*	*		*	28	31
XI				S1635-20173	<78286>	..COVER WHEN EXHTD RQTN..... NHA 1560-340-1265		EA		1						28	32
			1560-629-4450	S1507-2523	<78286>	REPAIR KIT,OIL PUMP COVER.... OBS-BY 1560-715-2242										28	
P	O		1560-715-2242	S1507-2523-1	<78286>	REPAIR KIT,OIL PUMP COVER.... OBSLTS 1560-629-4450 U/O 1560-672-3564 SEE FUNCTIONAL GROUP 50 FOR COMPONENTS NOTE 1 COMPONENT OF KIT 1560-715-2242		EA		1	*	*	2		*	28	

(1) SOURCE, MAINT AND REC CODE (a) SOURCE CODE	(b) MAINT LEVEL	(c) REC CODE	(2) FEDERAL STOCK NUMBER	(3) DESCRIPTION REFERENCE NUMBER			MODELS USABLE ON CH-34C	(4) UNIT OF ISSUE	(5) QTY INC IN UNIT PACK	(6) QTY INC IN UNIT	(7) 30-DAY DS/GS MAINT ALW (a) 1-20	(b) 21-50	(c) 51-100	(8) 1-YR ALW PER 100 EQUIP CNTGCY	(9) DEPOT MAINT ALW PER 100 EQUIP	(10) ILLUSTRATION (a) FIG NO	(b) ITEM NO
			1615-703-8950	S1635-20120-2	<78286>	COVER ASSEMBLY,HOUSING..... SEE FIG.25 FOR NHA OBS-BY 1615-570-9766		EA								29	
P	D		1615-570-9766	S1635-20120-6	<78286>	COVER ASSEMBLY,HOUSING..... OBSLTS 1615-703-8950		EA		1					*	29	
P	D		1560-303-2574	S1635-20119	<78286>	.LINER,SEAL.....		EA		1					*	29	1
P	D		5315-333-6839	S14-35-4101	<78286>	.PIN,DOWEL,LOWER.....		EA		2					REF	29	2
P	D		1610-628-7104	RZA10959	<83324>	.INSERT.....		EA		1					*	29	4
			5315-664-9459	S1535-20227	<78286>	.PIN,STRAIGHT,HEADLESS..... RPL-BY 5315-078-7712										29	
P	D		5315-078-7712	SS4018-2	<78286>	.PIN,STRAIGHT,HEADLESS..... RPLS-- 5315-664-9459		EA		7					*	29	5
P	D		1560-304-4616	S1635-20091-1	<78286>	.LINER,COVER HOUSING.....		EA		1					*	29	6
P	D		1615-303-2567	S1635-20090-1	<78286>	.LINER,ACCESSORY DRIVE.....		EA		1					*	29	7
P	D		1560-304-4615	S1635-20088-1	<78286>	.LINER,COVER.....		EA		1					*	29	8
P	D		5310-735-0196	RL33SB9	<83324>	.RING,LOCK,SERRATED.....		EA		6					REF	29	9
P	D		1560-659-1114	S1635-20214	<78286>	.LINER,COVER.....		EA		1					*	29	10
P	D		1560-303-2560	S1635-20074-1	<78286>	.LINER,COVER,MAIN GEAR BOX...		EA		1					*	29	11
P	D		1560-303-2559	S1635-20073-1	<78286>	.LINER,COVER.....		EA		1					*	29	12
P	D		1560-340-1829	S1635-20072-1	<78286>	.LINER.....		EA		1					*	29	13
			1615-564-1513	S1635-20084-5	<78286>	LINER AND STUD ASSEMBLY..... OBS-BY 1560-659-1110 SEE FIG.25 FOR NHA		EA								30	
P	D		1560-659-1110	S1635-20084-7	<78286>	HOUSING ASSEMBLY..... OBLSTS 1615-564-1513		EA		1					*	30	
			4730-684-7075	SS4017-6	<78286>	.RESTRICTOR,FLUID FLOW..... RPL-BY 1560-565-8483		EA								30	
P	D		1560-565-8483	SS4017-7	<78286>	.FITTING,RESTRICTOR,JET..... RPLS-- 4730-684-7075		EA		2					32	30	1
P	D		1560-662-0894	S1635-20116	<78286>	.BEARING,SLEEVE.....		EA		2					*	30	2
			5315-664-9459	S1535-20227	<78286>	.PIN,STRAIGHT,HEADLESS..... RPL-BY 5315-078-7712										30	
P	D		5315-078-7712	SS4018-2	<78286>	.PIN,STRAIGHT,HEADLESS..... RPLS-- 5315-664-9459		EA		7					REF	30	3
P	D		1560-303-2566	S1635-20089-1	<78286>	.LINER,GEAR BOX HOUSING.....		EA		2					*	30	4
P	D		1560-303-2564	S1635-20086-1	<78286>	.LINER,MAIN GEAR BOX HOUSING.		EA		4					*	30	5
P	D		1560-303-2565	S1635-20087-1	<78286>	.LINER,MAIN GEAR BOX HOUSING.		EA		1					*	30	6
P	D		1560-303-2569	S1635-20100	<78286>	.LINER,GEAR BOX HOUSING.....		EA		1					*	30	7
P	D		5310-281-9224	RL21SB6	<05683>	.RING,LOCK,SERRATED.....		EA		10					REF	30	8
P	D		5307-025-8273	SF91-7SA12A	<05683>	.STUD,LOCKED IN.....		EA		10					*	30	9

(1) SOURCE, MAINT AND REC CODE (a) SOURCE CODE	(b) MAINT LEVEL	(c) REC CODE	(2) FEDERAL STOCK NUMBER	REFERENCE NUMBER		(3) DESCRIPTION	MODELS USABLE ON CH-34C	(4) UNIT OF ISSUE	(5) QTY INC IN UNIT PACK	(6) QTY INC IN UNIT	(7) 30-DAY DS/GS MAINT ALW (a) 1-20	(b) 21-50	(c) 51-100	(8) 1-YR ALW PER 100 EQUIP CNTGCY	(9) DEPOT MAINT ALW PER 100 EQUIP	(10) ILLUSTRATION (a) FIG NO	(b) ITEM NO
P	D		5340-700-9281	RZA10316	<83324>	.RING,LOCK,SERRATED.....		EA		6					*	30	10
P	D		5310-682-5877	RL28SB8	<83324>	.RING,LOCK,SERRATED.....		HD		17					*	30	11
P	D		5310-200-7749	RL24SB7	<83324>	.RING,LOCK,SERRATED.....		HD		8					REF	30	13
P	D		5307-639-1617	SFA101-9SA12A	<83324>	.STUD,LOCKED IN.....		EA		8					*	30	14
P	D		5310-735-0196	RL33SB9	<83324>	.RING,LOCK,SERRATED.....		EA		8					REF	30	15
P	D		5340-598-8895	RA207SB9	<05683>	.INSERT,SCREW THREAD.....		EA		8					*	30	16
P	D		5310-682-5877	RL28SB8	<83324>	.RING,LOCK,SERRATED.....		HD		1					REF	30	17
P	D		5340-200-4175	805735-00	<87991>	.INSERT,SCREW THREAD.....		EA		1					*	30	18
P	D		5310-682-5877	RL28SB8	<83324>	.RING,LOCK,SERRATED.....		HD		29					REF	30	19
P	D		5307-025-8292	SF111-11SA13A	<83324>	.STUD,LOCKED IN.....		EA		29					*	30	20
P	D		5310-682-5877	RL28SB8	<83324>	.RING,LOCK,SERRATED.....		HD		4					REF	30	21
				SFB111-11SA145A	<05683>	.STUD,LOCKED IN.....		EA		4						30	22
P	D		5310-735-0196	RL33SB9	<83324>	.RING,LOCK,SERRATED.....		EA		12					REF	30	23
P	D		5307-271-8651	SF121-12SA18A	<05683>	.STUD,LOCKED IN.....		EA		12					*	30	24
P	D		5310-200-7749	RL24SB7	<83324>	.RING,LOCK,SERRATED.....		HD		3					REF	30	25
P	D		5307-264-2568	SF101-9SA8A	<05683>	.STUD,LOCKED IN.....		EA		3					*	30	26
			5330-835-7485	MS28778-3	<96906>	.PACKING,PREFORMED.....		EA		1					*	30	27
			5330-350-9013	AN6227B10	<88044>	.PACKING,PREFORMED.....		EA		1					REF	30	28
P	D		5310-281-3114	RL47SB8	<05683>	.RING,LOCK,SERRATED.....		EA		1					*	30	30
P	D		5310-200-7749	RL24SB7	<83324>	.RING,LOCK,SERRATED.....		HD		2					REF	30	32
P	D		5307-639-1617	SFA101-9SA12A	<83324>	.STUD,LOCKED IN.....		EA		2					REF	30	33
P	D		5310-200-7749	RL24SB7	<83324>	.RING,LOCK,SERRATED.....		HD		2					REF	30	34
				S1635-20141-39	<78286>	MAIN GEAR BOX OIL SEPARATOR.. INSTALLATION SEE FIG.11 FOR NHA										31	
P	O		1615-639-0586	S1635-20141-56	<78286>	.TUBE ASSEMBLY,MAIN GEAR BOX.		EA		1	*	*	*		*	31	1
			5310-282-7823	MS24400D4	<96906>	.NUT,PLAIN,HEXAGON.....		LL		1	*	*	*		*	31	2
			5330-805-2966	MS28778-4	<96906>	.PACKING,PREFORMED.....		EA		1	REF	REF	REF	REF	*	31	3
P	F		1615-560-5397	S1635-20185	<78286>	.RESTRICTOR ASSEMBLY,TEE.....		EA		1	*	*	*		*	31	4
			5310-282-7823	MS24400D4	<96906>	.NUT,PLAIN,HEXAGON.....		LL		1	*	*	*		*	31	5
			5330-805-2966	MS28778-4	<96906>	.PACKING,PREFORMED.....		EA		1	REF	REF	REF	REF	*	31	6
			4730-725-4351	MS24394D4	<96906>	.ELBOW,TUBE.....		EA		1	*	*	*	*	*	31	7
P	O		1560-633-0789	S1635-20141-52	<78286>	.TUBE ASSEMBLY.....		EA		1	*	*	2		*	31	8
P	O		1560-633-6942	S1635-20141-36		.TUBE ASSEMBLY.....		EA		1	*	*	*		*		
			5310-282-7834	MS24400D10	<96906>	.NUT,PLAIN,HEXAGON.....		EA		1	*	*	*		*	31	9
			5330-285-9842	MS28778-10	<96906>	.PACKING,PREFORMED.....		EA		1	REF	REF	REF	REF	*	31	10
			4730-803-5050	MS24394D10	<96906>	.ELBOW,TUBE.....		EA		1	*	*	*		*	31	11
			4730-277-6324	AN932-4	<88044>	.PLUG,PIPE.....		EA		1	*	*	*		*	31	12
P	F		5306-697-8483	S1635-20162	<78286>	.BOLT,MACHINE.....		EA		1	2	3	5		*	31	13
			5330-285-9842	MS28778-10	<96906>	.PACKING,PREFORMED.....		EA		1	REF	REF	REF	REF	*	31	14
			1560-098-8281	S1635-20161	<78286>	.FITTING ASSEMBLY,OIL..... SEPARATOR OBS-BY 1560-328-4829										31	
			1560-536-3056	S1635-20161-1	<78286>	.FITTING ASSEMBLY,OIL..... SEPARATOR OBS-BY 1560-328-4829										31	

(1) SOURCE, MAINT AND REC CODE (a) SOURCE CODE	(b) MAINT LEVEL	(c) REC CODE	(2) FEDERAL STOCK NUMBER	REFERENCE NUMBER		(3) DESCRIPTION	MODELS USABLE ON CH-34C	(4) UNIT OF ISSUE	(5) QTY INC IN UNIT PACK	(6) QTY INC IN UNIT	(7) 30-DAY DS/GS MAINT ALW (a) 1-20	(b) 21-50	(c) 51-100	(8) 1-YR ALW PER 100 EQUIP CNTGCY	(9) DEPOT MAINT ALW PER 100 EQUIP	(10) ILLUSTRATION (a) FIG NO	(b) ITEM NO
			5330-808-0794	MS28778-8	<96906>	.PACKING,PREFORMED.....		EA		1	REF	REF	REF		*	32	100
			4730-684-6915	MS24392D8	<96906>	.NIPPLE,TUBE.....		EA		1	*	*	REF	REF	*	32	101
MF	F			S1665-20059-253	<78286>	.TUBE ASSEMBLY-UNION TO UNION NOTE 2		EA		1						32	102
MF	F			S1665-20059-254	<78286>	..TUBE..... MAKEFR AR 4710-279-0948 TUBE		EA		1						32	105
AF	F			S1665-20083-1	<78286>	.PANEL ASSEMBLY-RESCUE..... HOIST HYDRAULIC SEE FIG.35 FOR BREAKDOWN ATTACHING PARTS		EA		1						32	106
P	O		5305-582-8998	NK525-10R6	<02615>	.SCREW,SELF-LOCKING,HEXAGON..		EA		8	*	*	*		*	32	107
			5310-167-0753	AN960PD10L	<88044>	.WASHER,FLAT..... ---*---		HD		8	*	*	*		*	32	
				S1665-20110-5	<78286>	.HYDRAULIC SYSTEM..... INSTALLATION-MAIN ROTOR SERVO USBL EFF 53-4475 THRU 56-4312				1						32	
				S1665-20110-10	<78286>	.HYDRAULIC SYSTEM..... INSTALLATION-MAIN ROTOR SERVO USBL EFF 56-4313 & SUBSEQUENT				1						32	
MF	F			S1665-20059-29	<78286>	..TUBE ASSEMBLY.....NOTE 1		EA		1						32	108
MF	F			S1665-20059-30	<78286>	...TUBE.....NOTE 1		EA		1						32	111
MF	O			S1665-20059-25	<78286>	..TUBE ASSEMBLY-DRAIN UNION.. TO ELBOW NOTE 1		EA		1						32	112
MF	F			S1665-20059-26	<78286>	...TUBE..... MAKEFR AR 4710-279-0948 TUBE		EA		1						32	115
MF	O			S1665-20059-191	<78286>	..TUBE ASSEMBLY,METAL..... NOTE 1		EA		1						32	116
MF	O			S1625-20059-192	<78286>	...TUBE ASSEMBLY..... MAKEFR AR 4710-279-0948 TUBE		EA		1						32	119
AF	O			S1665-20059-189	<78286>	..TUBE ASSEMBLY.....		EA		1						32	120
			4730-287-0289	AN818-4D	<88044>	...NUT,TUBE COUPLING.....		EA		2	*	*	*		*	32	121
			4730-302-8641	MS20819-4D	<96906>	...SLEEVE,FLARED,TUBE FITTING		EA		2	*	*	*		*	32	122
MF	F			S1665-20059-190	<78286>	...TUBE ASSEMBLY..... MAKEFR AR 4710-279-0948 TUBE		EA		1						32	123
			4730-722-1207	MS24402D4	<96906>	..TEE,TUBE.....		EA		1	*	*	*		*	32	124
			4730-277-6371	AN6289D4	<88044>	..LOCKNUT,TUBE FITTING.....		EA		1	*	*	*		*	32	125
			5330-805-2966	MS28778-4	<96906>	..PACKING,PREFORMED.....		EA		1	REF	REF	REF	REF	*	32	
			5330-186-4947	MS28777-4	<96906>	..WASHER,NONMETALLIC.....		LL		1	*	*	*		*	32	
			4730-725-4351	MS24394D4	<96906>	..ELBOW,TUBE.....		EA		1	*	*	*		*	32	
			4720-541-9243	MS28741-6-0330	<96906>	..HOSE ASSEMBLY-ELBOW TO..... COUPLING USE UNTIL EXHAUSTED,NO REPLACEMENT		EA		1	*	*	*			32	126
			4730-277-5083	AN6289D6	<88044>	..LOCKNUT,TUBE FITTING.....		EA		1	*	*	*		*	32	127
			5330-804-5695	MS28778-6	<96906>	..PACKING,PREFORMED.....		EA		1	REF	REF	REF		*	32	
			5330-186-1295	MS28777-6	<96906>	..WASHER,NONMETALLIC.....		EA		1	4	11	22		*	32	
			4730-684-6922	MS24394D6	<96906>	..ELBOW,TUBE.....		EA		1	*	*	*		*	32	

(1) SOURCE, MAINT AND REC CODE (a) SOURCE CODE	(b) MAINT LEVEL	(c) REC CODE	(2) FEDERAL STOCK NUMBER	REFERENCE NUMBER	(3) DESCRIPTION	MODELS USABLE ON CH-34C	(4) UNIT OF ISSUE	(5) QTY INC IN UNIT PACK	(6) QTY INC IN UNIT	(7) 30-DAY DS GS MAINT ALW (a) 1-20	(b) 21-50	(c) 51-100	(8) 1-YR ALW PER 100 EQUIP CNTGCY	(9) DEPOT MAINT ALW PER 100 EQUIP	(10) ILLUSTRATION (a) FIG NO	(b) ITEM NO
			4730-277-5083	AN6289D6 <88044>	..LOCKNUT,TUBE FITTING.....		EA		1	*	*	*		*	32	128
			5330-804-5695	MS28778-6 <96906>	..PACKING,PREFORMED.....		EA		1	REF	REF	REF		*	32	
			5330-186-1295	MS28777-6 <96906>	..WASHER,NONMETALLIC.....		EA		1	REF	REF	REF		*	32	
P	O		4730-203-7499	157-6D <00624>	..COUPLING ASSEMBLY.....		EA		1	*	*	*		*	32	129
MF	O			S1665-20059-23 <78286>	..TUBE ASSEMBLY-DRAIN..... RESERVOIR TO UNION NOTE 1		EA		1						32	130
MF	F			S1665-20059-24 <78286>	...TUBE..... MAKEFR AR 4710-279-0948 TUBE		EA		1						32	133
MF	F			S1665-20059-227 <78286>	..TUBE ASSEMBLY-RESERVOIR.... VENT,RESERVOIR TO TEE NOTE 1		EA		1						32	134
			4730-287-0289	AN818-4D <88044>	...NUT,TUBE COUPLING.....		EA		2	*	*	*		*	32	135
			4730-302-8641	MS20819-4D <96906>	...SLEEVE,FLARED,TUBE FITTING		EA		2	*	*	*		*	32	136
			4730-722-1207	MS24402D4 <96906>	..TEE,TUBE.....		EA		1	*	*	*		*	32	138
MF	F			S1665-20059-229 <78286>	..TUBE ASSEMBLY-RESERVOIR.... VENT TEE TO UNION NOTE 1		EA		1						32	139
			4730-287-0289	AN818-4D <88044>	...NUT,TUBE COUPLING.....		EA		2	*	*	*		*	32	140
			4730-302-8641	MS20819-4D <96906>	...SLEEVE,FLARED,TUBE FITTING		EA		2	*	*	*		*	32	141
MF	O			S1665-20059-27 <78286>	..TUBE ASSEMBLY,METAL..... NOTE 1		EA		1						32	143
MF	O			S1665-20059-28 <78286>	...TUBE ASSEMBLY..... MAKEFR AR 4710-279-0948 TUBE		EA		1						32	146
MF	O			S1665-20059-31 <78286>	..TUBE ASSEMBLY-DRAIN ELBOW.. TO OVERBOARD NOTE 1		EA		1						32	147
MF	F			S1665-20059-32 <78286>	...TUBE.....NOTE 1		EA		1						32	150
MF	F			4720EG003-8C180 <81996>	..HOSE ASSEMBLY..... MAKEFR AR 4720-815-6354 HOSE 2 EA 4730-952-5528 ADAPTER 2 EA 4730-967-9516 NUT 2 EA 4730-967-9524 SLEEVE 2 EA 5340-433-3269 PLUG										32	
P	F		4720-795-0595	EAB440-8-0180 <81996>	..HOSE ASSEMBLY.....		EA		1	*	*	*		*	32	151
			4730-684-7450	MS24399D16 <96906>	..REDUCER,TUBE.....		EA		1	2	5	10		*	32	152
			5330-285-9842	MS28778-10 <96906>	..PACKING,PREFORMED.....		EA		1	REF	REF	REF	REF	*	32	153
			4730-277-5081	AN6289D8 <88044>	..LOCKNUT,TUBE FITTING.....		EA		1	*	*	*		*	32	154
			5330-808-0794	MS28778-8 <96906>	..PACKING,PREFORMED.....		EA		1	REF	REF	REF		*	32	
			5330-186-1380	MS28777-8 <96906>	..WASHER,NONMETALLIC.....		LL		1	*	*	*		*	32	
P	O		4730-633-6150	157-8D <00624>	..COUPLING ASSEMBLY.....		EA		1	*	REF	REF	REF	REF	32	155
MF	O			4720EG003-8C0130 <81966>	..HOSE ASSEMBLY,RUBBER..... RPLS-- 4720-202-7931, 4720-720-0242 MAKEFR AR 4720-815-6354 HOSE 2 EA 4730-952-5528 NIPPLE 2 EA 4730-965-1121 SLEEVE 2 EA 4730-967-9516 SOCKET 2 EA 5340-433-3269 DUST CAP		EA		1						32	156

(1) SOURCE, MAINT AND REC CODE (a) SOURCE CODE	(b) MAINT LEVEL	(c) REC CODE	(2) FEDERAL STOCK NUMBER	REFERENCE NUMBER		(3) DESCRIPTION	MODELS USABLE ON CH-34C	(4) UNIT OF ISSUE	(5) QTY INC IN UNIT PACK	(6) QTY INC IN UNIT	(7) 30-DAY DS/GS MAINT ALW (a) 1-20	(b) 21-50	(c) 51-100	(8) 1-YR ALW PER 100 EQUIP CNTGCY	(9) DEPOT MAINT ALW PER 100 EQUIP	(10) ILLUSTRATION (a) FIG NO	(b) ITEM NO
			4730-277-5081	AN6289D8	<88044>	..LOCKNUT,TUBE FITTING.....		EA		1	*	*	*		*	32	157
			5330-808-0794	MS28778-8	<96906>	..PACKING,PREFORMED.....		EA		1	REF	REF	REF		*	32	158
			5330-186-1380	MS28777-8	<96906>	..WASHER,NONMETALLIC.....		LL		1	*	*	*		*	32	159
			4730-197-2917	MS24394D8	<96906>	..ELBOW,TUBE.....		EA		1	*	*	*		*	32	160
P	F		4330-517-7776	MS28720-8	<96906>	..FILTER,FLUID,PRESSURE..... ATTACHING PARTS		EA		1	2	2	5	55	*	32	161
			5306-558-9446	AN4DD26A	<88044>	..BOLT,MACHINE.....		EA		2	*	*	*		*	32	162
			5310-184-9001	AN960PD416L	<88044>	..WASHER,FLAT.....		HD		2	*	*	*		*	32	
			5310-877-5796	MS21044N4	<96906>	..NUT,SELF-LOCKING,HEXAGON... ---*---		EA		2	*	*	*		*	32	
P	O		4330-512-5239	AN6235-3A	<88044>	...FILTER ELEMENT,FLUID,..... PRESSURE		EA		1	*	*	*		*	32	163
			4720-589-3790	S1665-20058-3	<78286>	..HOSE ASSEMBLY,RUBBER..... RPL-BY 4720-860-0592 PN EAB380-10-0240-295										32	
MF	O			EAB380-10-0240-275	<81996>	..HOSE ASSEMBLY,..... TETRAFLUOROETHYLENE RPLS-- 4720-589-3790 MAKEFR 1 EA 4720-857-1730 HOSE 2 EA 4730-052-9520 ADAPTER 2 EA 4730-967-9517 NUT 2 EA 4730-967-9525 SLEEVE 2 EA 5340-726-3009 PLUG		EA		1						32	164
			4730-277-5078	AN6289-10D	<88044>	..LOCKNUT,TUBE FITTING.....		EA		1	*	*	*		*	32	165
			5330-285-9842	MS28778-10	<96906>	..PACKING,PREFORMED.....		EA		1	REF	REF	REF	REF	*	32	166
			5330-186-1381	MS28777-10	<96906>	..WASHER,NONMETALLIC.....		EA		1	REF	REF	REF		*	32	167
P	O		4730-676-1707	15519-10D	<00624>	..COUPLING ASSEMBLY,..... SELF-SEALING		EA		1	2	2	5	58	*	32	168
P	O		4730-633-6148	157-10D	<00624>	..COUPLING ASSEMBLY.....		EA		1	*	*	2	10	*	32	
			4730-805-5100	MS24399D21	<96906>	..REDUCER,TUBE.....		EA		1	*	*	*		*	32	169
			5330-251-8839	MS28778-12	<96906>	..PACKING,PREFORMED.....		EA		1	9	22	45		*	32	170
P	F		1560-566-2422	S1665-20033	<78286>	..BRACKET ASSEMBLY..... ATTACHING PARTS		EA		1	*	*	2		*	32	171
			5310-184-8980	AN960PD516L	<88044>	..WASHER,FLAT.....		HD		2	*	*	*		*	32	
			5310-088-0553	MS21044N5	<96906>	..NUT,SELF-LOCKING,HEXAGON...		HD		2	*	*	*		*	32	172
			5310-184-8980	AN960PD516L	<88044>	..WASHER,FLAT.....		HD		AR	*	*	*		*	32	
			5310-660-3381	MS21083N5	<96906>	..NUT,SELF-LOCKING,HEXAGON... ---*---				1	*	*	*		*	32	173
		R	1650-203-9958	67WB200-1	<43491>	..PUMP-HYDRAULIC RPL-BY..... 1650-289-8605 SEE FIG.181A FOR BREAKDOWN										32	
		R	1650-204-1688	67WB200	<43491>	..PUMP,AXIAL PISTONS..... RPL-BY 1650-289-8605 SEE FIG.181A FOR BREAKDOWN										32	
P	O	R	1650-289-8605	67WB200-3	<43491>	..PUMP,AXIAL PISTON RPLS--.. 1650-203-9958, 1650-204-1688 SEE FIG.181A FOR BREAKDOWN		EA		1	2	3	6	74	*	32	174

(1) SOURCE, MAINT AND REC CODE (a) SOURCE CODE	(b) MAINT LEVEL	(c) REC CODE	(2) FEDERAL STOCK NUMBER	(3) DESCRIPTION REFERENCE NUMBER		MODELS USABLE ON CH-34C	(4) UNIT OF ISSUE	(5) QTY INC IN UNIT PACK	(6) QTY INC IN UNIT	(7) 30-DAY DS/GS MAINT ALW (c) 1-20	(b) 21-50	(c) 51-100	(8) 1-YR ALW PER 100 EQUIP CNTGCY	(9) DEPOT MAINT ALW PER 100 EQUIP	(10) ILLUSTRATION (a) FIG NO	(b) ITEM NO
				CONTINUED											32	174
				ATTACHING PARTS												
			5310-184-8980	AN960PD516L	<88044>	..WASHER,FLAT.....		HD		1	*	*	*		*	32	
			5310-088-0553	MS21044N5	<96906>	..NUT,SELF-LOCKING,HEXAGON...		HD		1	*	*	*		*	32	175
				---*---												
			5330-599-5989	AN4044-1	<88044>	..GASKET,FLANGE.....		EA		2	2	5	10		*	32	176
P	F		1560-651-7293	S1665-20144	<78286>	..BRACKET ASSEMBLY.....		EA		1	*	*	2		*	32	177
			5310-184-8980	AN960PD516L	<88044>	..WASHER,FLAT.....		HD		AR	*	*	*		*	32	178
			5310-088-0553	MS21044N5	<96906>	..NUT,SELF-LOCKING,HEXAGON...		HD		4	*	*	*		*	32	179
MF	O			4720EG003-6C0170	<81996>	..HOSE ASSEMBLY,.....		EA		1						32	180
						TETRAFLUOROETHYLENE										
						NOTE 3										
MF	O			4720EG003-6C0230	<81996>	..HOSE ASSEMBLY,RUBBER.....		EA		1						32	181
						NOTE 3										
			4730-277-5083	AN6289D6	<88044>	..LOCKNUT,TUBE FITTING.....		EA		1	*	*	*		*	32	
			5330-804-5695	MS28778-6	<96906>	..PACKING,PREFORMED.....		EA		1	REF	REF	REF		*	32	
			5330-186-1295	MS28777-6	<96906>	..WASHER,NONMETALLIC.....		EA		1	REF	REF	REF		*	32	
			4730-725-0100	MS24395D6	<96906>	..TEE,TUBE.....		EA		1	*	*	*		*	32	181A
			4730-684-6917	MS24398D6-4	<96906>	..ADAPTER,STRAIGHT,TUBE TO...		EA		1	*	*	*		*	32	181B
						TO BOSS										
			4730-277-6429	AN941D4	<88044>	..ELBOW,BOSS.....		EA		1	*	*	*		*	32	181C
			4730-277-6371	AN6289D4	<88044>	..LOCKNUT,TUBE FITTING.....		EA		1	*	*	*		*	32	181D
			5330-805-2966	MS28778-4	<96906>	..PACKING,PREFORMED.....		EA		1	REF	REF	REF	REF	*	32	
			5330-186-4947	MS28777-4	<96906>	..WASHER,NONMETALLIC.....		LL		1	*	*	*		*	32	
			4730-277-6458	AN832-4	<88044>	..NIPPLE,TUBE.....		EA		1	*	*	*		*	32	
MF	O			4720EG003-6C0250	<81996>	..HOSE ASSEMBLY,.....		EA		1						32	182
						TETRAFLUOROETHYLENE										
						NOTE 3										
			4730-277-5083	AN6289D6	<88044>	..LOCKNUT,TUBE FITTING.....		EA		1	*	*	*		*	32	
			5330-804-5695	MS28778-6	<96906>	..PACKING,PREFORMED.....		EA		1	REF	REF	REF		*	32	
			5330-186-1295	MS28777-6	<96906>	..WASHER,NONMETALLIC.....		EA		1	REF	REF	REF		*	32	
			4730-725-0100	MS24395D6	<96906>	..TEE,TUBE.....		EA		1	*	*	*		*	32	182A
			4730-684-6917	MS24398D6-4	<96906>	..ADAPTER,STRAIGHT,TUBE TO...		EA		1	*	*	*		*	32	182B
						BOSS										
			4730-277-6429	AN941D4	<88044>	..ELBOW,BOSS.....		EA		1	*	*	*		*	32	182C
			4730-277-6371	AN6289D4	<88044>	..LOCKNUT,TUBE FITTING.....		EA		1	*	*	*		*	32	182D
			5330-805-2966	MS28778-4	<96906>	..PACKING,PREFORMED.....		EA		1	REF	REF	REF	REF	*	32	
			5330-186-4947	MS28777-4	<96906>	..WASHER,NONMETALLIC.....		LL		1	*	*	*		*	32	
			4730-277-6458	AN832-4	<88044>	..NIPPLE,TUBE.....		EA		1	*	*	*		*	32	
			4730-277-5083	AN6289D6	<88044>	..LOCKNUT,TUBE FITTING.....		EA		1	*	*	*		*	32	182E
			5330-804-5695	MS28778-6	<96906>	..PACKING,PREFORMED.....		EA		1	REF	REF	REF		*	32	
			5330-186-1295	MS28777-6	<96906>	..WASHER,NONMETALLIC.....		EA		1	REF	REF	REF		*	32	
			4730-186-9997	MS24396D6	<96906>	..ELBOW,TUBE.....		EA		1	*	*	*		*	32	
			4730-684-6917	MS24398D6-4	<96906>	..ADAPTER,STRAIGHT,TUBE TO...		EA		1	*	*	*		*	32	182F
						BOSS										
P	O		4720-916-2571	MS27363G0270	<96906>	..HOSE ASSEMBLY,.....		EA		1	*	*	*		*	32	183
						TETRAFLUOROETHYLENE										
			4730-277-5083	AN6289D6	<88044>	..LOCKNUT,TUBE FITTING.....		EA		1	*	*	*		*	32	183A
			5330-804-5695	MS28778-6	<96906>	..PACKING,PREFORMED.....		EA		1	REF	REF	REF		*	32	
			5330-186-1295	MS28777-6	<96906>	..WASHER,NONMETALLIC.....		EA		1	REF	REF	REF		*	32	
			4730-186-9997	MS24396D6	<96906>	..ELBOW,TUBE.....		EA		1	*	*	*		*	32	
			4730-277-5083	AN6289D6	<88044>	..LOCKNUT,TUBE FITTING.....		EA		1	*	*	*		*	32	183B

(1) SOURCE, MAINT AND REC CODE (a) SOURCE CODE	(b) MAINT LEVEL	(c) REC LEVEL	(2) FEDERAL STOCK NUMBER	REFERENCE NUMBER	(3) DESCRIPTION	MODELS USABLE ON CH-34C	(4) UNIT OF ISSUE	(5) QTY INC IN UNIT PACK	(6) QTY INC IN UNIT	(7) 30-DAY DS GS MAINT ALW (a) 1-20	(b) 21-50	(c) 51-100	(8) 1 YR ALW PER 100 EQUIP CNTGCY	(9) DEPOT MAINT ALW PER 100 EQUIP	(10) ILLUSTRATION (a) FIG NO	(b) ITEM NO
			5330-804-5695	MS28778-6	<96906> ..PACKING,PREFORMED.....		EA		1	REF	REF	REF		*	32	
			5330-186-1295	MS28777-6	<96906> ..WASHER,NONMETALLIC.....		EA		1	REF	REF	REF		*	32	
			4730-278-3683	AN939D6	<88044> ..ELBOW,BOSS.....		EA		1	*	*	*		*	32	
			4730-277-6836	AN832-6D	<88044> ..NIPPLE,TUBE.....		EA		1	*	*	*		*	32	183C
			4730-684-6917	MS24398D6-4	<96906> ..ADAPTER,STRAIGHT,TUBE TO... BOSS		EA		1	*	*	*		*	32	183D
			4720-289-6346	MS28741-6-0230	<96906> ..HOSE ASSEMBLY,RUBBER..... RPL-BY 4720-786-5274		EA		1	*	*	*		*	32	
P	O		4720-786-5274	EAB440-6-0230	<81996> ..HOSE ASSEMBLY,..... TETRAFLUOROETHYLENE		EA		1	*	2	2		*	32	184
			4730-277-5083	AN6289D6	<88044> ..LOCKNUT,TUBE FITTING.....		EA		1	*	*	*		*	32	
			5330-804-5695	MS28778-6	<96906> ..PACKING,PREFORMED.....		EA		1	REF	REF	REF		*	32	
			5330-186-1295	MS28777-6	<96906> ..WASHER,NONMETALLIC.....		EA		1	REF	REF	REF		*	32	
			4730-725-0100	MS24395D6	<96906> ..TEE,TUBE.....		EA		1	*	*	*		*	32	184A
			4730-684-6917	MS24398D6-4	<96906> ..ADAPTER,STRAIGHT,TUBE TO... BOSS		EA		1	*	*	*		*	32	184B
			4730-278-3682	AN939D4	<88044> ..ELBOW,BOSS.....		EA		1	*	*	*		*	32	184C
			4730-277-6371	AN6289D4	<88044> ..LOCKNUT,TUBE FITTING.....		EA		1	*	*	*		*	32	184D
			5330-805-2966	MS28778-4	<96906> ..PACKING,PREFORMED.....		EA		1	REF	REF	REF	REF	*	32	
			5330-186-4947	MS28777-4	<96906> ..WASHER,NONMETALLIC.....		LL		1	*	*	*		*	32	
			4730-277-6458	AN832-4	<88044> ..NIPPLE,TUBE.....		EA		1	*	*	*		*	32	
			4720-289-6346	MS28741-6-0230	<96906> ..HOSE ASSEMBLY,RUBBER..... RPL-BY 4720-786-5274		EA		1	*	*	*		*	32	
P	O		4720-786-5274	EAB 440-6-0230	<81996> ..HOSE ASSEMBLY..... TETRAFLUOROETHYLENE		EA		1	*	REF	REF		REF	32	185
			4730-277-5083	AN6289D6	<88044> ..LOCKNUT,TUBE FITTING.....		EA		1	*	*	*		*	32	
			5330-804-5695	MS28778-6	<96906> ..PACKING,PREFORMED.....		EA		1	REF	REF	REF		*	32	
			5330-186-1295	MS28777-6	<96906> ..WASHER,NONMETALLIC.....		EA		1	REF	REF	REF		*	32	
			4730-725-0100	MS24395D6	<96906> ..TEE,TUBE.....		EA		1	*	*	*		*	32	185A
			4730-684-6917	MS24398D6-4	<96906> ..ADAPTER,STRAIGHT,TUBE TO... BOSS		EA		1	*	*	*		*	32	185B
			4730-278-3682	AN939D4	<88044> ..ELBOW,BOSS.....		EA		1	*	*	*		*	32	185C
			4730-277-6371	AN6289D4	<88044> ..LOCKNUT,TUBE FITTING.....		EA		1	*	*	*		*	32	185D
			5330-805-2966	MS28778-4	<96906> ..PACKING,PREFORMED.....		EA		1	REF	REF	REF	REF	*	32	
			5330-186-4947	MS28777-4	<96906> ..WASHER,NONMETALLIC.....		LL		1	*	*	*		*	32	
			4730-277-6458	AN832-4	<88044> ..NIPPLE,TUBE.....		EA		1	*	*	*		*	32	
MF	O			4720EG003-4C0100	<81996> ..HOSE ASSEMBLY,..... TETRAFLUOROETHYLENE MAKEFR AR 4720-857-1732 HOSE 2 EA 4730-952-5532 NIPPLE 2 EA 4730-967-9513 SOCKET 2 EA 4730-967-9521 SLEEVE 2 EA 5340-834-8330 DUST PLUG		EA		1						32	186
			4730-277-6371	AN6289D4	<88044> ..LOCKNUT,TUBE FITTING.....		EA		1	*	*	*		*	32	
			5330-805-2966	MS28778-4	<96906> ..PACKING,PREFORMED.....		EA		1	REF	REF	REF	REF	*	32	
			5330-186-4947	MS28777-4	<96906> ..WASHER,NONMETALLIC.....		LL		1	*	*	*		*	32	
			4730-803-5049	MS24396D4	<96906> ..ELBOW,TUBE.....		EA		1	*	*	*		*	32	187
			6685-512-1228	ST7B	<61349> ..TRANSMITTER,PRESSURE..... RPL-BY 6685-087-8229										32	
			6685-515-4710	ST7C	<61349> ..TRANSMITTER,PRESSURE..... RPL-BY 6685-087-8229										32	

(1) SOURCE, MAINT AND REC CODE (a) SOURCE CODE	(b) MAINT LEVEL	(c) REC CODE	(2) FEDERAL STOCK NUMBER	REFERENCE NUMBER		(3) DESCRIPTION	MODELS USABLE ON CH-34C	(4) UNIT OF ISSUE	(5) QTY INC IN UNIT PACK	(6) QTY INC IN UNIT	(7) 30-DAY DS/GS MAINT ALW (a) 1-20	(b) 21-50	(c) 51-100	(8) 1-YR ALW PER 100 EQUIP CNTGCY	(9) DEPOT MAINT ALW PER 100 EQUIP	(10) ILLUSTRATION (a) FIG NO	(b) ITEM NO
			6685-526-7881	ST7D	<61349>	..TRANSMITTER,PRESSURE..... RPL-BY 6685-087-8229										32	
			6685-530-3538	7609-37B5-2	<19315>	..TRANSMITTER,PRESSURE..... RPL-BY 6685-087-8229										32	
			6685-556-8810	MS28005-5	<96906>	..TRANSMITTER,PRESSURE..... RPL-BY 6685-087-8229										32	
			6685-585-9348	7609-37D5-2	<19315>	..TRANSMITTER,PRESSURE..... RPL-BY 6685-087-8229										32	
			6685-663-8559	ST7A	<61349>	..TRANSMITTER,PRESSURE..... RPL-BY 6685-087-8229										32	
			6685-663-8566	7609-37A5-1	<19315>	..TRANSMITTER,PRESSURE..... RPL-BY 6685-087-8229										32	
			6685-833-3020	7609-37C5-1	<02987>	..TRANSMITTER,PRESSURE..... RPL-BY 6685-087-8229										32	
P	O		6685-087-8229	7609-37M5-2	<02987>	..TRANSMITTER,PRESSURE..... RPLS-- 6685-512-1228, 6685-515-4710, 6685-526-7881, 6685-530-3538, 6685-556-8810, 6685-585-9348, 6685-663-8559, 6685-663-8566,& 6685-833-3020		EA		1	2	4	9	103	*	32	188
			5305-958-4351	MS35207-226	<96906>	..SCREW,MACHINE.....				4	*	*	*		*	32	189
AF	F			S1665-20064-1	<78286>	..SUPPORT ASSEMBLY..... TRANSMITTER ATTACHING PARTS		EA		1						32	190
			5305-150-9213	AN502-10-6	<88044>	..SCREW,MACHINE.....		HD		4	*	*	*		*	32	191
			5310-167-0753	AN960PD10L	<88044>	..WASHER,FLAT..... ---*---		HD		4	*	*	*		*	32	
P	F		1560-663-2872	S1520-61987	<78286>	...SPRING,HELICAL,EXTENSION..		EA		4	4	10	21		*	32	192
P	F		1560-627-2157	S1665-61679	<78286>	...ADAPTER ASSEMBLY..... ATTACHING PARTS		EA		1	*	*	*		*	32	193
			5306-182-2063	AN3H12A	<88044>	...BOLT,MACHINE.....		HD		2	*	*	*		*	32	194
			5310-183-4406	AN960PD10	<88044>	...WASHER,FLAT.....		HD		2	*	*	*		*	32	
			5310-877-5797	MS21044N3	<96906>	...NUT,SELF-LOCKING,HEXAGON.. ---*---		EA		2	*	*	*		*	32	
P	F		5310-217-1565	S14-35-4401	<78286>	...WASHER FLAT.....		EA		2	3	7	13		*	32	195
P	F		5340-727-1891	NAS43DD3-44	<80205>	...SPACER,SLEEVE.....		EA		2	*	*	*		*	32	196
			5325-276-6091	MS35489-19	<96906>	...GROMMET,RUBBER.....		LL		2	*	*	*		*	32	197
X2	F		1650-651-4201	S1665-61544-1	<78286>	...CLIP,HYDRAULIC SYSTEM.....		EA		2	*	*	2		*	32	198
P	F		1650-651-4200	S1665-61544-2	<78286>	...CLIP,HYDRAULIC SERVO.....		EA		2	*	*	2		*	32	200
P	F		1650-534-4147	S1665-20060	<78286>	...BRACKET,WOBBLE PLATE.....		EA		1	*	*	2		*	32	202
			4730-277-6371	AN6289D4	<88044>	..LOCKNUT,TUBE FITTING.....		EA		1	*	*	*		*	32	203
			5330-805-2966	MS28778-4	<96906>	..PACKING,PREFORMED.....		EA		1	REF	REF	REF	REF	*	32	204
			5330-186-4947	MS28777-4	<96906>	..WASHER,NONMETALLIC.....		LL		1	*	*	*		*	32	205
			4730-725-4351	MS24394D4	<96906>	..ELBOW,TUBE.....		EA		1	*	*	*		*	32	206
P	F		4330-033-4783	11223-50	<75287>	..FILTER,FLUID,PRESSURE.....		EA		1	*	*	*		*	32	207
			5330-805-2966	MS28778-4	<96906>	..PACKING,PREFORMED.....		EA		1	REF	REF	REF	REF	*	32	208
P	O		6685-516-7562	8195-1	<99643>	..DAMPER,FLUID,PRESSURE.....		EA		1	*	*	*		*	32	209
			5330-805-2966	MS28778-4	<96906>	..PACKING,PREFORMED.....		EA		1	REF	REF	REF	REF	*	32	210

(1) SOURCE, MAINT AND REC CODE (a) SOURCE CODE	(b) MAINT LEVEL	(c) REC CODE	(2) FEDERAL STOCK NUMBER	REFERENCE NUMBER		(3) DESCRIPTION	MODELS USABLE ON CH-34C	(4) UNIT OF ISSUE	(5) QTY INC IN UNIT PACK	(6) QTY INC IN UNIT	(7) 30-DAY DS GS MAINT ALW (a) 1-20	(b) 21-50	(c) 51-100	(8) 1-YR ALW PER 100 EQUIP CNTGCY	(9) DEPOT MAINT ALW PER 100 EQUIP	(10) ILLUSTRATION (a) FIG NO	(b) ITEM NO
AF	F			S1665-20077-1	<78286>	..PANEL ASSEMBLY,MAIN ROTOR.. SERVO HYDRAULIC SYSTEM SEE FIG.33 FOR BREAKDOWN ATTACHING PARTS		EA		1						32	211
			5306-182-2061	AN3H10A	<88044>	..BOLT,MACHINE.....		HD		1	*	*	*		*	32	212
			5310-167-0753	AN960PD10L	<88044>	..WASHER,FLAT.....		HD		3	*	*	*		*	32	
			5310-877-5797	MS21044N3	<96906>	..NUT,SELF-LOCKING,HEXAGON...		EA		1	*	*	*		*	32	
			5306-182-2057	AN3H4A	<88044>	..BOLT,MACHINE.....		HD		2	*	*	*		*	32	213
						---*---											
P	F		1560-334-6427	S1665-20031	<78286>	..BRACKET ASSEMBLY,HYDRAULIC. RESERVOIR SUPPORT		EA		1	*	*	2		*	32	214
MF	F			S1665-20031-5	<78286>	...CLIP.....		EA		1						32	215
						MAKEFR											
						AR 9535-554-1414 AL ALLY SH											
						NOTE 1											
						MAKEFR											
						AR 4710-279-6398 TUBE											
						2 EA 4730-287-0289 NUT											
						2 EA 4730-302-8641 SLEEVE											
						NOTE 2 MAKEFR											
						AR 4710-279-0948 TUBE											
						2 EA 4730-287-0288 NUT											
						2 EA 4730-277-5373 SLEEVE											
						NOTE 3											
						MAKEFR											
						AR 4720-857-1731 HOSE											
						2 EA 4720-952-5529 NIPPLE											
						2 EA 4730-967-9513 SOCKET											
						2 EA 4730-967-9523 SLEEVE											
						2 EA 5340-988-6032 DUST PLUG											
						PANEL ASSEMBLY,MAIN ROTOR.... HYDRAULIC SYSTEM										33	
AF	F			S1665-20077-1	<78286>	PANEL ASSEMBLY-MAIN ROTOR.... HYDRAULIC SYSTEM SEE FIG.32 FOR NHA ATTACHING PARTS		EA								33	
			5306-182-2061	AN3H10A	<88044>	BOLT,MACHINE.....		HD		1	*	*	*		*	33	
			5310-167-0753	AN960PD10L	<88044>	WASHER,FLAT.....		HD		3	*	*	*		*	33	
			5310-877-5797	MS21044N3	<96906>	NUT,SELF-LOCKING,HEXAGON.....		EA		1	*	*	*		*	33	
			5306-182-2057	AN3H4A	<88044>	BOLT,MACHINE.....		HD		2	*	*	*		*	33	
						---*---											
MF	O			S1665-20059-5	<78286>	.TUBE ASSEMBLY-PRESSURE..... RELIEF VALVE TO SOLENOID VALVE		EA		1						33	1
						MAKEFR											
						AR 4710-279-0948 TUBE											

(1) SOURCE, MAINT AND REC CODE (a) SOURCE CODE	(b) MAINT LEVEL	(c) REC CODE	(2) FEDERAL STOCK NUMBER	REFERENCE NUMBER		(3) DESCRIPTION	MODELS USABLE ON CH-34C	(4) UNIT OF ISSUE	(5) QTY INC IN UNIT PACK	(6) QTY INC IN UNIT	(7) 30-DAY DS/GS MAINT ALW (a) 1 20	(b) 21-50	(c) 51-100	(8) 1-YR ALW PER 100 EQUIP CNTGCY	(9) DEPOT MAINT ALW PER 100 EQUIP	(10) ILLUSTRATION (a) FIG NO	(b) ITEM NO
						CONTINUED										33	1
						2 EA 4730-277-5373 SLEEVE											
						2 EA 4730-287-0288 NUT											
MF	F			S1665-20059-6	<78286>	..TUBE.....		EA		1						33	4
						MAKEFR											
						AR 4710-278-6398 TUBE											
						2 EA 4730-287-0289 NUT											
						2 EA 4730-302-8641 SLEEVE											
			4730-277-5081	AN6289D8	<88044>	.LOCKNUT,TUBE FITTING.....		EA		1	*	*	*		*	33	
			5330-808-0794	MS28778-8	<96906>	.PACKING,PREFORMED.....		EA		1	REF	REF	REF		*	33	
			5330-186-1380	MS28777-8	<96906>	.WASHER,NONMETALLIC.....		LL		1	*	*	*		*	33	
			4730-197-2917	MS24394D8	<96906>	.ELBOW,TUBE.....		EA		1	*	*	*		*	33	5
			4730-805-0680	MS24398D8-6	<96906>	.REDUCER,TUBE.....		EA		1	*	*	*		*	33	6
			5330-804-5695	MS28778-6	<96906>	.PACKING,PREFORMED.....		EA		1	REF	REF	REF		*	33	
			4730-277-5081	AN6289D8	<88044>	.LOCKNUT,TUBE FITTING.....		EA		1	*	*	*		*	33	
			5330-808-0794	MS28778-8	<96906>	.PACKING,PREFORMED.....		EA		1	REF	REF	REF		*	33	
			5330-186-1380	MS28777-8	<96906>	.WASHER,NONMETALLIC.....		LL		1	*	*	*		*	33	
			4730-756-1937	MS24395D8	<96906>	.TEE,TUBE.....		EA		1	*	*	*		*	33	7
			4730-805-0680	MS24398D8-6	<96906>	.REDUCER,TUBE.....		EA		1	*	*	*		*	33	8
			5330-804-5695	MS28778-6	<96906>	.PACKING,PREFORMED.....		EA		1	REF	REF	REF		*	33	
MF	O			S1665-20059-17	<78286>	.TUBE ASSEMBLY,METAL.....		EA		1						33	9
						MAKEFR											
						AR 4710-278-6398 TUBE											
						2 EA 4730-287-0289 NUT											
						2 EA 4730-302-8641 SLEEVE											
			1560-613-4841	S1665-20059-18	<78286>	..TUBE.....		EA		1						33	12
			4730-684-7157	MS24399D7	<96906>	.REDUCER,TUBE.....		EA		1	*	*	*		*	33	13
			5330-804-5695	MS28778-6	<96906>	.PACKING,PREFORMED.....		EA		1	REF	REF	REF		*	33	
			4730-828-1395	MS24399D10	<96906>	.REDUCER,TUBE.....		EA		1	*	*	*		*	33	14
			5330-808-0794	MS28778-8	<96906>	.PACKING,PREFORMED.....		EA		1	REF	REF	REF		*	33	
			4730-805-0680	MS24398D8-6	<96906>	.REDUCER,TUBE.....		EA		1	*	*	*		*	33	15
			5330-808-0794	MS28778-8	<96906>	.PACKING,PREFORMED.....		EA		1	REF	REF	REF		*	33	
			4730-277-5081	AN6289D8	<88044>	.LOCKNUT,TUBE FITTING.....		EA		1	*	*	*		*	33	16
			5330-808-0794	MS28778-8	<96906>	.PACKING,PREFORMED.....		EA		2	REF	REF	REF		*	33	
			5330-186-1380	MS28777-8	<96906>	.WASHER,NONMETALLIC.....		LL		1	*	*	*		*	33	
			4730-812-6431	MS24388D8	<96906>	.TEE,TUBE TO BOSS.....		EA		1	*	*	*		*	33	
P	O		1560-671-4947	S1665-20059-13	<78286>	.TUBE ASSEMBLY-PRESSURE.....		EA		1	*	*	*		*	33	17
						RELIEF VALVE TO RESERVOIR											
			4730-277-5083	AN6289D6	<88044>	.LOCKNUT,TUBE FITTING.....		EA		1	*	*	*		*	33	
			5330-804-5695	MS28778-6	<96906>	.PACKING,PREFORMED.....		EA		1	REF	REF	REF		*	33	
			5330-186-1295	MS28777-6	<96906>	.WASHER,NONMETALLIC.....		EA		1	REF	REF	REF		*	33	
			4730-684-6922	MS24394D6	<96906>	.ELBOW,TUBE.....		EA		1	*	*	*		*	33	18
			4730-277-5083	AN6289D6	<88044>	.LOCKNUT,TUBE FITTING.....		EA		1	*	*	*		*	33	
			5330-804-5695	MS28778-6	<96906>	.PACKING,PREFORMED.....		EA		1	REF	REF	REF		*	33	
			5330-186-1295	MS28777-6	<96906>	.WASHER,NONMETALLIC.....		EA		1	REF	REF	REF		*	33	
			4730-684-6922	MS24394D6	<96906>	.ELBOW,TUBE.....		EA		1	*	*	*		*	33	19
MF	O			S1665-20059-249	<78286>	.TUBE ASSEMBLY-VALVE TO.....		EA		1						33	20
						PRESSURE SWITCH RPLS--											
						1560-671-4948											
						MAKEFR											
						AR 4710-278-6398 TUBE											
						2 EA 4730-287-0289 NUT											

(1) SOURCE, MAINT AND REC CODE (a) SOURCE CODE	(b) MAINT LEVEL	(c) REC CODE	(2) FEDERAL STOCK NUMBER	REFERENCE NUMBER	(3) DESCRIPTION	MODELS USABLE ON CH-34C	(4) UNIT OF ISSUE	(5) QTY INC IN UNIT PACK	(6) QTY INC IN UNIT	(7) 30-DAY DS GS MAINT ALW (a) 1-20	(b) 21-50	(c) 51-100	(8) 1-YR ALW PER 100 EQUIP CNTGCY	(9) DEPOT MAINT ALW PER 100 EQUIP	(10) ILLUSTRATION (a) FIG NO	(b) ITEM NO
					CONTINUED										33	20
					2 EA 4730-302-8641 SLEEVE											
MF	F			S1665-20059-250 <78286>	..TUBE.....		EA		1						33	23
					MAKEFR											
					AR 4710-278-6398 TUBE											
					2 EA 4730-287-0289 NUT											
					2 EA 4730-302-8641 SLEEVE											
X1				S1665-20059-16 <78286>	..TUBE,HYDRAULIC VALVE.....		EA		1						33	
			4730-684-7157	MS24399D7 <96906>	.REDUCER,TUBE.....		EA		1	*	*	*		*	33	24
			5330-804-5695	MS28778-6 <96906>	.PACKING,PREFORMED.....		EA		1	REF	REF	REF		*	33	
			4730-277-6371	AN6289D4 <88044>	.LOCKNUT,TUBE FITTING.....		EA		1	*	*	*		*	33	25
			5330-805-2966	MS28778-4 <96906>	.PACKING,PREFORMED.....		EA		1	REF	REF	REF	REF	*	33	
			5330-186-4947	MS28777-4 <96906>	.WASHER,NONMETALLIC.....		LL		1	*	*	*		*	33	
			4730-804-8683	MS24389D4 <96906>	.TEE,TUBE.....		EA		1	*	*	*		*	33	
			4730-277-5083	AN6289D6 <88044>	.LOCKNUT,TUBE FITTING.....		EA		1	*	*	*		*	33	
			5330-804-5695	MS28778-6 <96906>	.PACKING,PREFORMED.....		EA		1	REF	REF	REF		*	33	
			5330-186-1295	MS28777-6 <96906>	.WASHER,NONMETALLIC.....		EA		1	REF	REF	REF		*	33	
			4730-278-3683	AN939D6 <88044>	.ELBOW,BOSS.....		EA		1	*	*	*		*	33	26
			4730-277-6836	AN832-6D <88044>	.NIPPLE,TUBE.....		EA		1	*	*	*		*	33	27
			5330-804-5695	MS28778-6 <96906>	.PACKING,PREFORMED.....		EA		1	REF	REF	REF		*	33	
			4730-277-5083	AN6289D6 <88044>	.LOCKNUT,TUBE FITTING.....		EA		1	*	*	*		*	33	
			5330-804-5695	MS28778-6 <96906>	.PACKING,PREFORMED.....		EA		1	REF	REF	REF		*	33	
			5330-186-1295	MS28777-6 <96906>	.WASHER,NONMETALLIC.....		EA		1	REF	REF	REF		*	33	
			4730-804-8684	MS24389D6 <96906>	.TEE,TUBE.....		EA		1	*	*	*		*	33	28
			4730-277-5081	AN6289D8 <88044>	.LOCKNUT,TUBE FITTING.....		EA		1	*	*	*		*	33	29
			5330-808-0794	MS28778-8 <96906>	.PACKING,PREFORMED.....		EA		1	REF	REF	REF		*	33	
			5330-186-1380	MS28777-8 <96906>	.WASHER,NONMETALLIC.....		LL		1	*	*	*		*	33	
			4730-277-2458	AN939D8 <88044>	.ELBOW,TUBE.....		EA		1	*	*	*		*	33	
			4730-062-6821	MS24393D8 <96906>	.NIPPLE,TUBE.....		EA		1	*	*	*		*	33	30
			5330-808-0794	MS28778-8 <96906>	.PACKING,PREFORMED.....		EA		1	REF	REF	REF		*	33	
P	F		1650-529-1169	S1565-61831 <78286>	.VALVE,SOLENOID.....		EA		1	*	2	2		*	33	31
					ATTACHING PARTS											
			5306-182-2011	AN3H22A <88044>	.BOLT,MACHINE.....		HD		2	*	*	*		*	33	32
			5310-167-0753	AN960PD10L <88044>	.WASHER,FLAT.....		HD		4	*	*	*		*	33	
			5310-877-5797	MS21044N3 <96906>	.NUT,SELF-LOCKING,HEXAGON....		EA		2	*	*	*		*	33	
					---*---											
P	F		5930-201-3288	AL58D1113A1 <73760>	.SWITCH,PRESSURE.....		EA		1	*	*	*		*	33	33
					ATTACHING PARTS											
			5305-144-3828	AN526-1032R26 <88044>	.SCREW,MACHINE.....		HD		2	*	*	*		*	33	34
			5310-167-0753	AN960PD10L <88044>	.WASHER,FLAT.....		HD		4	*	*	*		*	33	
			5310-877-5797	MS21044N3 <96906>	.NUT,SELF-LOCKING,HEXAGON....		EA		2	*	*	*		*	33	
					---*---											
			4730-845-3502	MS24391D6L <96906>	.PLUG,MACHINE THREAD.....		EA		2	2	4	8		*	33	35
			5330-804-5695	MS28778-6 <96906>	.PACKING,PREFORMED.....		EA		2	REF	REF	REF		*	33	
P	O		1650-540-4108	AN6200-6AB <88044>	.VALVE,SAFETY,RELIEF.....		EA		1	*	*	*	5	*	33	36
					ATTACHING PARTS											
			5305-144-3828	AN520-10R26 <88044>	.SCREW,MACHINE.....		HD		4	*	*	*		*	33	37
			5310-167-0753	AN960PD10L <88044>	.WASHER,FLAT.....		HD		8	*	*	*		*	33	
			5310-877-5797	MS21044N3 <96906>	.NUT,SELF-LOCKING,HEXAGON....		EA		4	*	*	*		*	33	
			5340-768-2747	NAS43DD3-62 <80205>	.SPACER,SLEEVE.....		EA		4	*	*	*		*	33	38
					---*---											
P	F		1560-546-4395	S1665-20032-1 <78286>	.BRACKET ASSEMBLY,SERVO.....		EA		1	*	*	2		*	33	39

(1) SOURCE, MAINT AND REC CODE (a) SOURCE CODE	(b) MAINT LEVEL	(c) REC CODE	(2) FEDERAL STOCK NUMBER	REFERENCE NUMBER	(3) DESCRIPTION	MODELS USABLE ON CH-34C	(4) UNIT OF ISSUE	(5) QTY INC IN UNIT PACK	(6) QTY INC IN UNIT	(7) 30-DAY DS/GS MAINT ALW (a) 1-20	(b) 21-50	(c) 51-100	(8) 1-YR ALW PER 100 EQUIP CNTGCY	(9) DEPOT MAINT ALW PER 100 EQUIP	(10) ILLUSTRATION (a) FIG NO	(b) ITEM NO
					CONTINUED RESERVOIR RPLS-- 1560-898-0087 ATTACHING PARTS										33	39
			5306-754-1787	MS20074-03-03 <96906>	.BOLT,MACHINE.....		EA		3	*	*	*		*	33	40
			5310-167-0753	AN960PD10L <88044>	.WASHER,FLAT.....		HD		3	*	*	*		*	33	
					---*---											
			1650-639-6257	S1565-20078 <78286>	..PLATE,HYDRAULIC SYSTEM..... RPL-BY 1560-575-1994										33	
P	F		1560-575-1994	S1565-20087 <78286>	..PLATE,HYDRAULIC RPLS--.... 1650-639-6257 ATTACHING PARTS		EA		1	*	*	*		*	33	41
				MS20470DD2-8 <96906>	..RIVET.....		EA		4						33	42
					---*---											
AF	F			S1665-20075-3 <78286>	.TANK HYDRAULIC..... FLUID,AIRCRAFT RPLS-- 1650-332-6641, 1650-692-7652 SEE FIG.34 FOR BREAKDOWN		EA		1						33	43
AF	F			S1565-20059-5 <78286>	.TANK,HYDRAULIC FLUID SEE... FIG.34 FOR BREAKDOWN		EA		1						33	
P	F		4810-769-1980	640-1-17 <70236>	.REPAIR KIT,VALVE U/O..... 1650-529-1169 SEE FUNCTIONAL GROUP 50 FOR COMPONENTS		EA		1	*	*	2		*	33	
P	H		4810-768-0375	640-1-16 <70236>	KIT,PARTS,OVERHAUL VALVE..... U/O 1650-529-1169 SEE FUNCTIONAL GROUP 50 FOR COMPONENTS		EA		1	*	*	*		*	33	
					RESERVOIR ASSEMBLY,..... HYDRAULIC SYSTEM SERVO										34	
AF	F			S1665-20075-3 <78286>	TANK, HYDRAULIC SYSTEM..... SERVO RPLS-- 1650-332-6641, 1650-692-7652 SEE FIG.33 FOR NHA		EA								34	
AF	F			S1565-20059-5 <78286>	TANK,HYDRAULIC FLUID SEE.... FIG.33 FOR NHA		EA								34	
			4730-080-1847	MS24391DL5 <96906>	.PLUG,MACHINE THREAD.....		EA		1	*	*	*		*	34	1
			5330-833-7491	MS28778-5 <96906>	.PACKING,PREFORMED.....		EA		1	*	2	2		*	34	2
			4730-837-0856	MS24391D4L <96906>	.PLUG,MACHINE THREAD.....		EA		1	*	*	*	REF	*	34	3
			5330-805-2966	MS28778-4 <96906>	.PACKING,PREFORMED.....		EA		1	REF	REF	REF	REF	*	34	4
			4730-684-7157	MS24399D7 <96906>	.REDUCER,TUBE.....		EA		1	*	*	*		*	34	5
			5330-804-5695	MS28778-6 <96906>	.PACKING,PREFORMED.....		EA		1	REF	REF	REF		*	34	6
P	F		1650-694-4669	S1565-20064 <78286>	.ADAPTER,SERVO RESERVOIR.....		EA		1	*	*	*		*	34	7
P	F		1650-527-6584	S1565-20066 <78286>	.GASKET.....		EA		1	2	4	8		*	34	8

(1) SOURCE, MAINT AND REC CODE (a) SOURCE CODE	(b) MAINT LEVEL	(c) REC CODE	(2) FEDERAL STOCK NUMBER	REFERENCE NUMBER		(3) DESCRIPTION	MODELS USABLE ON CH-34C	(4) UNIT OF ISSUE	(5) QTY INC IN UNIT PACK	(6) QTY INC IN UNIT	(7) 30-DAY DS GS MAINT ALW (a) 1-20	(b) 21-50	(c) 51-100	(8) 1-YR ALW PER 100 EQUIP CNTGCY	(9) DEPOT MAINT ALW PER 100 EQUIP	(10) ILLUSTRATION (a) FIG NO	(b) ITEM NO
			5340-804-3893	MS16625-1143	<96906>	.RING,RETAINING.....		EA		1	*	*	*		*	34	9
P	O		1650-024-9665	AN6237-1	<88044>	.FILTER ELEMENT,FLUID,..... PRESSURE		EA		1	2	3	5	62	*	34	10
P	O		1650-510-2048	S14-40-7004	<78286>	.CAP,FILTER HYDRAULIC.....		EA		1	*	*	*		*	34	11
MO	O			S14-40-7009	<78286>	..CHAIN ASSEMBLY,HYDRAULIC... SYSTEM RESERVOIR FILLER CAP MAKEFR AR 5340-633-5975 KIT CHAIN ATTACHING PARTS		EA		1						34	12
			5306-182-2061	AN3H10A	<88044>	..BOLT,MACHINE..... ---*---		HD		1	*	*	*		*	34	13
			5340-804-2786	MS16625-1125	<96906>	.RING,RETAINING.....		EA		1	*	*	*		*	34	14
P	O		1650-343-4371	S1565-20062	<78286>	.STRAINER ASSEMBLY,SERVO..... RESERVOIR		EA		1	2	2	4		*	34	15
P	F		1650-530-2938	S1565-20065	<78286>	.WINDOW,OBSERVATION..... ATTACHING PARTS		EA		1	2	2	3		*	34	16
			5340-804-2771	MS16625-1250	<96906>	.RING,RETAINING..... ---*---		EA		1	*	*	*		*	34	17
			5330-194-3713	AN6230B6	<88044>	.PACKING,PREFORMED.....		EA		1	*	*	*		*	34	18
P	F		1650-567-1086	S1565-20059-1	<78286>	.TANK,HYDRAULIC FLUID..... ATTACHING PARTS		EA		1	*	*	*		*	34	19
			5306-182-2061	AN3H10A	<88044>	.BOLT,MACHINE.....NOTE 1		HD		3	*	*	*		*	34	20
			5306-182-2063	AN3H12A	<88044>	.BOLT,MACHINE.....NOTE 2		HD		2	*	*	*		*	34	
			5310-183-4406	AN960PD10	<88044>	.WASHER,FLAT.....NOTE 1		HD		6	*	*	*		*	34	
			5310-183-4406	AN960PD10	<88044>	.WASHER,FLAT.....NOTE 2		HD		4	*	*	*		*	34	
			5310-877-5797	MS21044N3	<96906>	.NUT,SELF-LOCKING,HEXAGON.... NOTE 1		EA		3	*	*	*		*	34	
			5310-877-5797	MS21044N3	<96906>	.NUT,SELF-LOCKING,HEXAGON.... NOTE 2		EA		2	*	*	*		*	34	
			5306-182-2062	AN3H11A	<88044>	.BOLT,MACHINE.....NOTE 1		HD		1	*	*	*		*	34	21
			5306-182-2064	AN3H13A	<88044>	.BOLT,MACHINE.....NOTE 2		HD		2	*	*	*		*	34	
			5310-183-4406	AN960PD10	<88044>	.WASHER,FLAT.....NOTE 1		HD		2	*	*	*		*	34	
			5310-183-4406	AN960PD10	<88044>	.WASHER,FLAT.....NOTE 2		HD		4	*	*	*		*	34	
			5310-877-5797	MS21044N3	<96906>	.NUT,SELF-LOCKING,HEXAGON.... NOTE 1		EA		1	*	*	*		*	34	
			5310-877-5797	MS21044N3	<96906>	.NUT,SELF-LOCKING,HEXAGON.... NOTE 2 ---*---		EA		2	*	*	*		*	34	
MF	F			AN743-12	<88044>	..BRACKET,ANGLE.....NOTE 2 MAKEFR AR 9535-237-0378 AL ALLY SH		EA		1						34	
P	F		1650-633-8513	S14-40-5058	<78286>	.BRACKET,HYDRAULIC RESERVOIR.		EA		1	*	*	*		*	34	22
P	F		1650-394-0156	S14-40-7103	<78286>	.PLATE,FLIGHT CONTROLS,..... HYDRAULIC		EA		1	*	*	*		*	34	23
			5330-196-6695	AN6238-1	<88044>	.WASHER,NONMETALLIC.....		EA		1	9	22	44		*	34	24
			5330-726-1235	MS29561-261	<96906>	.PACKING,PREFORMED.....		EA		2	*	*	*		*	34	25
MF*	F			S14-40-7043	<78286>	.REFLECTOR,SERVO RESERVOIR... MAKEFR AR 9535-232-0378 AL ALLY SH ATTACHING PARTS		EA		1						34	26
			5305-145-6971	AN503-8-6	<88044>	.SCREW,MACHINE.....		HD		2	*	*	*		*	34	27

(1) SOURCE, MAINT AND REC CODE (a) SOURCE CODE	(b) MAINT LEVEL	(c) REC CODE	(2) FEDERAL STOCK NUMBER	(3) DESCRIPTION REFERENCE NUMBER			MODELS USABLE ON CH-34C	(4) UNIT OF ISSUE	(5) QTY INC IN UNIT PACK	(6) QTY INC IN UNIT	(7) 30-DAY DS/GS MAINT ALW (a) 1-20	(b) 21-50	(c) 51-100	(8) 1-YR ALW PER 100 EQUIP CNTGCY	(9) DEPOT MAINT ALW PER 100 EQUIP	(10) ILLUSTRATION (a) FIG NO	(b) ITEM NO
			5310-184-9002	AN960PD8L	<88044>	.WASHER,FLAT.....		HD		2	*	*	*		*	34	
						---*---											
P	O		4330-252-0592	AN6236-1	<88044>	.FILTER ELEMENT,FLUID.....		EA		1	2	6	12		*	34	28
						PRESSURE											
			5330-196-6695	AN6238-1	<88044>	.WASHER,NONMETALLIC.....		EA		1	REF	REF	REF		*	34	29
P	O		1650-692-2524	S14-40-7013	<78286>	.VALVE ASSEMBLY.....		EA		1	*	*	*		*	34	30
			5330-582-2133	MS28775-011	<96906>	.PACKING,PREFORMED.....		EA		1	*	*	*		*	34	31
P	F		1650-333-7993	S1665-20075-2	<78286>	.TANK HALF,HYDRAULIC.....		EA		1	*	*	*		*	34	32
						NOTE 1											
P	F		1650-570-0579	S1565-20059-2	<78286>	.RESERVOIR ASSEMBLY,MAIN.....		EA		1	*	*	*		*	34	
						ROTOR SERVO,LOWER NOTE 2											
P	F		5310-200-7749	RL24SB7	<83324>	..RING,LOCK,SERRATED.....		HD		4	*	*	*		REF	34	33
P	F		5340-290-5124	R205SB7	<05683>	..INSERT,SCREW THREAD.....		EA		4	*	*	*		REF	34	34
P	O		1650-701-2240	S1665-20076	<78286>	..TANK HALF,HYDRAULIC.....		EA		1	*	*	*		*	34	35
						NOTE 1											
						U/O PN S1665-20075-3											
						NOTE 2											
						U/O PN S1565-20059-5											
						PANEL ASSEMBLY-RESCUE HOIST..										35	
						HYDRAULIC											
AF	F			S1665-20083-1	<78286>	PANEL ASSEMBLY-RESCUE HOIST..		EA								35	
						HYDRAULIC SEE FIG.32 FOR											
						NHA											
						ATTACHING PARTS											
P	O		5305-582-8998	NK525-10R6	<02615>	SCREW,SELF-LOCKING,HEXAGON...		EA		8	*	*	*		*	35	
			5310-167-0753	AN960PD10L	<88044>	WASHER,FLAT.....		HD		8	*	*	*		*	35	
						---*---											
MF	O			S1665-20059-47	<78286>	.TUBE ASSEMBLY.....		EA		1						35	1
						MAKEFR											
						AR 4710-279-0948 AL ALLY SH											
			5310-167-0753	AN960PD10L	<88044>	WASHER,FLAT.....		HD		3	*	*	*			35	
						---*---											
			4730-287-0288	AN818-8D	<88044>	..NUT,TUBE COUPLING.....		EA		2	*	*	*		*	35	2
			4730-277-5373	MS20819-8D	<96906>	..SLEEVE,FLARED,TUBE FITTING.		EA		2	*	*	*		*	35	3
MF	F			S1665-20059-48	<78286>	..TUBE.....		EA		1						35	4
						MAKEFR											
						AR 4710-278-6398 TUBE											
						2 AR 4730-287-0289 NUT											
						2 AR 4730-302-8641 SLEEVE											
			4730-684-6915	MS24392D8	<96906>	.NIPPLE,TUBE.....		EA		1	*	*	REF	REF	*	35	5
			5330-808-0794	MS28778-8	<96906>	.PACKING,PREFORMED.....		EA		1	REF	REF	REF		*	35	
			4730-277-5081	AN6289D8	<88044>	.LOCKNUT,TUBE FITTING.....		EA		1	*	*	*		*	35	
			5330-808-0794	MS28778-8	<96906>	.PACKING,PREFORMED.....		EA		1	REF	REF	REF		*	35	
			5330-186-1380	MS28777-8	<96906>	.WASHER,NONMETALLIC.....		LL		1	*	*	*		*	35	
			4730-804-1932	MS24396D8	<96906>	.ELBOW,TUBE.....		EA		1	*	*	*		*	35	6
MF	F			S1665-20059-93	<78286>	.TUBE ASSEMBLY-RETURN.....		EA		1						35	7

(1) SOURCE, MAINT AND REC CODE (a) SOURCE CODE	(b) MAINT LEVEL	(c) REC CODE	(2) FEDERAL STOCK NUMBER	REFERENCE NUMBER		(3) DESCRIPTION	MODELS USABLE ON CH-34C	(4) UNIT OF ISSUE	(5) QTY INC IN UNIT PACK	(6) QTY INC IN UNIT	(7) 30-DAY DS GS MAINT ALW (a) 1-20	(b) 21-50	(c) 51-100	(8) 1-YR ALW PER 100 EQU.P CNTGCY	(9) DEPOT MAINT ALW PER 100 EQU.P	(10) ILLUSTRATION (a) FIG NO	(b) ITEM NO
						CONTINUED										35	7
						ELBOW TO ELBOW											
						MAKEFR											
						AR 4710-279-0948 TUBE											
						2 EA 4730-277-5373 SLEEVE											
						2 EA 4730-287-0288 NUT											
			4730-287-0288	AN818-8D	<88044>	..NUT,TUBE COUPLING.....		EA		2	*	*	*		*	35	8
			4730-277-5373	MS20819-8D	<96906>	..SLEEVE,FLARED,TUBE FITTING.		EA		2	*	*	*		*	35	9
MF	F			S1665-20059-94	<78286>	..TUBE.....		EA		1						35	10
						MAKEFR											
						AR 4710-279-0948 TUBE											
			4730-277-5081	AN6289D8	<88044>	.LOCKNUT,TUBE FITTING.....		EA		1	*	*	*		*	35	
			5330-808-0794	MS28778-8	<96906>	.PACKING,PREFORMED.....		EA		1	REF	REF	REF		*	35	
			5330-186-1380	MS28777-8	<96906>	.WASHER,NONMETALLIC.....		LL		1	*	*	*		*	35	
			4730-197-2917	MS24394D8	<96906>	.ELBOW,TUBE.....		EA		1	*	*	*		*	35	11
			4730-277-5081	AN6289D8	<88044>	.LOCKNUT,TUBE FITTING.....		EA		1	*	*	*		*	35	
			5330-808-0794	MS28778-8	<96906>	.PACKING,PREFORMED.....		EA		1	REF	REF	REF		*	35	
			5330-186-1380	MS28777-8	<96906>	.WASHER,NONMETALLIC.....		LL		1	*	*	*		*	35	
			4730-197-2917	MS24394D8	<96906>	.ELBOW,TUBE.....		EA		1	*	*	*		*	35	12
MF	F			S1665-20059-45	<78286>	.TUBE ASSEMBLY.....		EA		1						35	13
						MAKEFR											
						AR 4710-279-0948 TUBE											
						2 EA 4730-277-5373 SLEEVE											
						2 EA 4730-287-0288 NUT											
MF	F			S1665-20059-46	<78286>	..TUBE.....		EA		1						35	16
						MAKEFR											
						AR 4710-279-0948 TUBE											
			4730-277-5081	AN6289D8	<88044>	.LOCKNUT,TUBE FITTING.....		EA		1	*	*	*		*	35	
			5330-808-0794	MS28778-8	<96906>	.PACKING,PREFORMED.....		EA		1	REF	REF	REF		*	35	
			5330-186-1380	MS28777-8	<96906>	.WASHER,NONMETALLIC.....		LL		1	*	*	*		*	35	
			4730-197-2917	MS24394D8	<96906>	.ELBOW,TUBE.....		EA		1	*	*	*		*	35	17
			4730-684-6915	MS24392D8	<96906>	.NIPPLE,TUBE.....		EA		1	*	*	REF	REF	*	35	18
			5330-808-0794	MS28778-8	<96906>	.PACKING,PREFORMED.....		EA		1	REF	REF	REF		*	35	
			4730-684-7158	MS24399D11	<96906>	.REDUCER,TUBE.....		EA		1	*	*	*		*	35	19
			5330-808-0794	MS28778-8	<96906>	.PACKING,PREFORMED.....		EA		1	REF	REF	REF		*	35	
P	O		1650-529-3225	AN6207-8	<88044>	.VALVE ASSEMBLY.....		EA		1	*	*	*		*	35	20
			5330-808-0794	MS28778-8	<96906>	.PACKING,PREFORMED.....		EA		1	REF	REF	REF		*	35	
			4730-277-5081	AN6289D8	<88044>	.LOCKNUT,TUBE FITTING.....		EA		1	*	*	*		*	35	
			5330-808-0794	MS28778-8	<96906>	.PACKING,PREFORMED.....		EA		1	REF	REF	REF		*	35	
			5330-186-1380	MS28777-8	<96906>	.WASHER,NONMETALLIC.....		LL		1	*	*	*		*	35	
			4730-277-5055	AN938D8	<88044>	.TEE,TUBE.....		EA		1	*	2	2		*	35	21
			4730-062-6821	MS24393D8	<96906>	.NIPPLE,TUBE.....		EA		1	*	*	*		*	35	22
			5330-808-0794	MS28778-8	<96906>	.PACKING,PREFORMED.....		EA		1	REF	REF	REF		*	35	
P	O		1650-540-4106	AN6200-8AB	<88044>	.VALVE,SAFETY.....		EA		1	*	*	*		*	35	23
						ATTACHING PARTS											
			5306-182-2064	AN3H13A	<88044>	.BOLT,MACHINE.....		HD		4	*	*	*		*	35	24
			5310-167-0753	AN960PD10L	<88044>	.WASHER,FLAT.....		HD		4	*	*	*		*	35	
						---*---											
			5340-716-8061	NAS43HT-128	<80205>	.SPACER,SLEEVE.....		EA		4	*	*	*		*	35	25
			4730-684-6915	MS24392D8	<96906>	.NIPPLE,TUBE.....		EA		1	*	*	REF	REF	*	35	26
			5330-808-0794	MS28778-8	<96906>	.PACKING,PREFORMED.....		EA		1	REF	REF	REF		*	35	
			4730-277-5081	AN6289D8	<88044>	.LOCKNUT,TUBE FITTING.....		EA		1	*	*	*		*	35	27

(1) SOURCE, MAINT AND REC CODE (a) SOURCE CODE	(b) MAINT LEVEL	(c) REC CODE	(2) FEDERAL STOCK NUMBER	REFERENCE NUMBER		(3) DESCRIPTION	MODELS USABLE ON CH-34C	(4) UNIT OF ISSUE	(5) QTY INC IN UNIT PACK	(6) QTY INC IN UNIT	(7) 30-DAY DS/GS MAINT ALW (a) 1-20	(b) 21-50	(c) 51-100	(8) 1-YR ALW PER 100 EQUIP CNTGCY	(9) DEPOT MAINT ALW PER 100 EQUIP	(10) ILLUSTRATION (a) FIG NO	(b) ITEM NO
			5330-808-0794	MS28778-8	<96906>	.PACKING,PREFORMED.....		EA		1	REF	REF	REF		*	35	28
			5330-186-1380	MS28777-8	<96906>	.WASHER,NONMETALLIC.....		LL		1	*	*	*		*	35	29
			4730-197-2917	MS24394D8	<96906>	.ELBOW,TUBE.....		EA		1	*	*	*		*	35	30
P	F	R	1650-439-1140	AA40100	<62983>	.VALVE,SOLENOID..... SEE FIG.35A FOR BREAKDOWN		EA		1	*	*	2		*	35	31
						ATTACHING PARTS											
			5306-182-2005	AN3H14A	<88044>	.BOLT,MACHINE.....		HD		3	*	*	*		*	35	32
			5310-167-0753	AN960PD10L	<88044>	.WASHER,FLAT.....		HD		3	*	*	*		*	35	
						---*---											
P	H		1650-567-7244	95235	<62983>	..COVER,HYDRAULIC VALVE.....		EA		1	*	*	*		*	35	
P	F		4330-517-7776	MS28720-8	<96906>	.FILTER,FLUID,PRESSURE.....		EA		1	REF	REF	REF	REF	REF	35	33
						ATTACHING PARTS											
			5306-182-2020	AN4H26A	<88044>	.BOLT,MACHINE.....		HD		2	*	*	*		*	35	34
			5310-187-2354	AN960PD416	<88044>	.WASHER,FLAT.....		HD		2	*	*	*		*	35	
			5310-877-5796	MS21044N4	<96906>	.NUT,SELF-LOCKING,HEXAGON....		EA		2	*	*	*		*	35	
						---*---											
P	O		4330-512-5239	AN6235-3A	<88044>	..FILTER ELEMENT,FLUID..... PRESSURE		EA		1	*	*	*		REF	35	35
P	F		1560-613-9679	S1665-20084-4	<78286>	.BRACKET ASSEMBLY USBL EFF.. 56-4284 & SUBSEQUENT		EA		1	*	*	*		*	35	36
						ATTACHING PARTS											
			5306-182-2056	AN3H3A	<88044>	.BOLT,MACHINE.....		HD		6	*	*	*		*	35	37
			5310-167-0753	AN960PD10L	<88044>	.WASHER,FLAT.....		HD		6	*	*	*		*	35	
P	F		5305-688-2342	N80P16018C6	<03538>	.SCREW,MACHINE.....		EA		2	*	*	*		*	35	38
			5310-167-0765	AN970-3	<88044>	.WASHER,FLAT.....		HD		2	*	*	*		*	35	
			5310-877-5797	MS21044N3	<96906>	.NUT,SELF-LOCKING,HEXAGON....		EA		2	*	*	*		*	35	
						---*---											
X2	F			S1665-20084-3	<78286>	..SPACER.....		EA		2						35	39
P	F	R	1650-439-1140	AA40100	<62983>	VALVE,SOLENOID..... SEE FIG.35 FOR NHA		EA			*	*	REF			35A	
						ATTACHING PARTS											
			5306-182-2005	AN3H14A	<88044>	BOLT,MACHINE.....		HD		3	*	*	*			35A	
P	F		5945-095-1993	93148	<62983>	.SOLENOID,ELECTRICAL.....		EA		2	*	*	*		*	35A	1
						..PLUNGER,SOLENOID.....		EA		1						35A	2
			5306-754-3049	MS20073-03-04	<96906>	.BOLT,MACHINE.....		EA		4	*	*	*		*	35A	3
			5310-167-0818	AN960-10	<88044>	.WASHER,FLAT.....		HD		4	*	*	*		*	35A	4
P	H		1650-567-7244	95235	<62983>	.COVER,HYDRAULIC.....		EA		1	*	*	*		*	35A	5
			5330-584-0263	MS28775-218	<96906>	.PACKING PREFORMED.....		EA		1	*	*	*		*	35A	6
				3X84185	<62983>	.PIN,COVER.....NOTE 1		EA		1						35A	7
			5306-754-1791	AN73-5	<88044>	.BOLT,MACHINE.....		EA		2	*	*	*		*	35A	8
				AN73-6	<88044>	.BOLT,MACHINE.....NOTE 1		EA		2						35A	9
			5310-167-0818	AN960-10	<88044>	.WASHER,FLAT.....		HD		4	*	*	*		*	35A	10
P	H		1650-397-5788	86246	<62983>	.SHOE.....		EA		1	*	*	*		*	35A	11
			5310-167-1285	AN310-4	<88044>	.NUT,CASTELLATED,HEXAGON.....		HD		1	*	*	*		*	35A	12
			5310-167-0835	AN960-416L	<88044>	.WASHER,FLAT.....		HD		1	*	*	*		*	35A	13
				93147	<62983>	.PIN,LOCKNUT.....		EA		1						35A	14

(1) SOURCE, MAINT AND REC CODE (a) SOURCE CODE	(b) MAINT LEVEL	(c) REC CODE	(2) FEDERAL STOCK NUMBER	(3) DESCRIPTION REFERENCE NUMBER			MODELS USABLE ON CH-34C	(4) UNIT OF ISSUE	(5) QTY INC IN UNIT PACK	(6) QTY INC IN UNIT	(7) 30-DAY DS GS MAINT ALW (a) 1-20	(b) 21-50	(c) 51-100	(8) 1-YR ALW PER 100 EQUIP CNTGCY	(9) DEPO MAINT ALW PER 100 EQUIP	(10) ILLUSTRATION (a) FIG NO	(b) ITEM NO
P	H		1650-095-1996	95237	<62983>	.CONNECTING LINK,RIGID.....		EA		1	*	*	*		*	35A	15
			5310-167-0835	AN960-416L	<88044>	.WASHER,FLAT.....		HD		1	*	*	*		*	35A	16
P	H		1650-095-1936	3X93143	<62983>	.SHAFT.....		EA		1	*	*	*		*	35A	17
				3X1601	<62983>	.KEY,SHAFT.....NOTE 1		EA		1						35A	18
			5330-584-0266	MS28775-010	<96906>	.PACKING,PREFORMED.....		EA		1	*	*	*		*	35A	19
				3X83312	<62983>	.SHIM,LEVER.....NOTE 1		EA		3						35A	20
				3X93145	<62983>	.LEVER,CONTROL.....NOTE 1		EA		2						35A	21
				3X95637	<62983>	.SPRING,LEVER.....NOTE 1		EA		1						35A	22
P	H		1650-397-5791	93144	<62983>	.LEVER.....		EA		1	*	*	*		*	35A	23
			5315-812-3765	MS20392-2C33	<96906>	.PIN,STRAIGHT,HEADED.....		EA		2	*	*	*		*	35A	24
			5310-167-0818	AN960-10	<88044>	.WASHER,FLAT.....		HD		2	*	*	*		*	35A	25
			5315-234-1856	MS24665-155	<96906>	.PIN,COTTER.....		HD		2	*	*	*		*	35A	26
				3X84185	<62983>	.PIN,LEVER.....NOTE 1		EA		1						35A	27
				103309	<62983>	.BODY,INSERTS AND PLATE..... SUBASSEMBLY		EA		1						35A	28
X2	H		1650-382-0325	74687	<62983>	..PLATE,IDENTIFICATION.....		EA		1	*	*	*		*	35A	29
			5305-253-5603	MS21318-1	<96906>	..SCREW,DRIVE.....		HD		2	*	*	*		*	35A	30
			4730-684-6915	MS24392D8	<96906>	.NIPPLE,TUBE.....		EA		1	*	*	REF	REF	*	35A	31
			5330-808-0794	MS28778-8	<96906>	.PACKING,PREFORMED.....		EA		1	REF	REF	REF		*	35A	32
				95236	<62983>	.SPOOL.....		EA		1						35A	33
			4730-080-1846	MS24391D8L	<96906>	.PLUG,MACHINE THREAD.....		EA		1	*	*	*		*	35A	34
			5330-808-0794	MS28778-8	<96906>	.PACKING,PREFORMED.....		EA		1	REF	REF	REF		*	35A	35
P	F		1650-672-7943	912333	<62983>	REPAIR KIT,VALVE,CURE DATE... U/O 1650-439-1140 SEE FUNCTIONAL GROUP 50 FOR COMPONENTS		EA		1	*	2	2		*	35A	
P	H		1650-690-2039	912641	<62983>	PARTS KIT,VALVE,OVERHAUL..... U/O 1650-439-1140 SEE FUNCTIONAL GROUP 50 FOR COMPONENTS NOTE 1 COMPONENT OF KIT 1650-690-2039		EA		1	*	2	2		*	35A	
				S1620-62500	<78286>	MAIN ROTOR TRANSMISSION..... SUPPORT INSTALLATION SEE FIG.11 FOR NHA										36	
			1560-706-9283	S1620-62508-2	<78286>	.ROD ASSEMBLY-TRANSMISSION... RPL-BY 1560-651-8928		EA			*	*	*			36	
P	F		1560-651-8928	S1620-62508-1	<78286>	.ROD ASSEMBLY-TRANSMISSION... SUPPORT-AFT RPLS-- 1560-706-9283		EA		2	2	3	5		*	36	1
			1560-708-0801	S1620-62508-4	<78286>	.ROD ASSEMBLY-TRANSMISSION... RPL-BY 1560-651-8929		EA			*	*	*			36	
P	F		1560-651-8929	S1620-62508-3	<78286>	.ROD ASSEMBLY-TRANSMISSION... SUPPORT-FORWARD RPLS-- 1560-708-0801		EA		2	2	3	6		*	36	

(1) SOURCE, MAINT AND REC CODE (a) SOURCE CODE	(b) MAINT LEVEL	(c) REC CODE	(2) FEDERAL STOCK NUMBER	REFERENCE NUMBER	(3) DESCRIPTION	MODELS USABLE ON CH-34C	(4) UNIT OF ISSUE	(5) QTY INC IN UNIT PACK	(6) QTY INC IN UNIT	(7) 30-DAY DS/GS MAINT ALW (a) 1-20	(b) 21-50	(c) 51-100	(8) 1-YR ALW PER 100 EQUIP CNTGCY	(9) DEPOT MAINT ALW PER 100 EQUIP	(10) ILLUSTRATION (a) FIG NO	(b) ITEM NO
					CONTINUED										36	
					ATTACHING PARTS											
			5306-639-2458	AN175H12 <88044>	.BOLT,MACHINE.....		EA		2	*	*	*		*	36	2
			5310-194-0636	MS9320-11 <96906>	.WASHER,THRUST.....		EA		4	*	*	*		*	36	3
			5310-088-0553	MS21044N5 <96906>	.NUT,SELF-LOCKING,HEXAGON....		HD		2	*	*	*		*	36	4
					---*---											
X1				S1620-61266 <78286>	..FITTING ASSEMBLY,.....		EA		2						36	5
					TRANSMISSION SUPPORT,ROD END WHEN EXHTD RQTN NHA 1560-651-8928 OR 1560-651-8929											
					ATTACHING PARTS											
			5306-141-4511	AN174H20A <88044>	..BOLT,MACHINE.....		EA		2	*	*	*		*	36	6
			5310-194-0637	MS9320-10 <96906>	..WASHER,THRUST.....		EA		4	*	*	*		*	36	7
			5310-877-5796	MS21044N4 <96906>	..NUT,SELF-LOCKING,HEXAGON...		EA		2	*	*	*		*	36	8
					---*---											
P	F		3120-287-7933	75-5-008 <80205>	...BUSHING,SLEEVE.....		AV		2	*	*	*		*	36	8
X1				S1620-61265-2 <78286>	..ROD ASSEMBLY.....		EA		1						36	
X1				S1620-62561-2 <78286>	..TUBE,ROD ASSEMBLY-AFT.....		EA		1						36	9
					WHEN EXHTD RQTN NHA 1560-651-8928											
X1				S1620-61265-1 <78286>	..ROD ASSEMBLY.....		EA		1						36	
X1				S1620-62561-1 <78286>	..TUBE,ROD ASSEMBLY-FORWARD..		EA		1						36	10
					WHEN EXHTD RQTN NHA 1560-651-8929											
P	F		1560-651-8930	S1620-62511 <78286>	.FITTING ASSEMBLY,LOWER.....		EA		4	2	3	7		*	36	
					ATTACHING PARTS											
			5306-275-9528	AN175H13 <88044>	.BOLT,MACHINE.....		EA		1	*	*	*		*	36	11
			5310-194-0636	MS9320-11 <96906>	.WASHER,THRUST.....		EA		2	*	*	*		*	36	12
			5310-088-0553	MS21044N5 <96906>	.NUT,SELF-LOCKING,HEXAGON....		HD		1	*	*	*		*	36	13
					---*---											
P	F		3120-287-7933	75-5-008 <80205>	..BUSHING SLEEVE.....		AV		3	*	*	*		*	36	14
X1				S1620-62560 <78286>	..FITTING.....		EA		1						36	15
			1560-326-3426	S1620-61264 <78286>	.FITTING ASSEMBLY,.....										36	
					TRANSMISSION SUPPORT OBS-BY 1560-608-1119											
P	F		1560-608-1119	S1620-62513 <78286>	.FITTING,LOWER OBSLTS..... 1560-326-3426		EA		4	2	4	8		*	36	16
					ATTACHING PARTS											
			5306-584-5034	AN176-24A <88044>	.BOLT,MACHINE.....		EA		1	*	*	*		*	36	17
			5310-184-8974	MS9320-12 <96906>	.WASHER,THRUST.....		EA		2	*	*	*		*	36	18
			5310-950-0039	MS21044N6 <96906>	.NUT,SELF-LOCKING,HEXAGON....		HD		1	*	*	*		*	36	19
					---*---											
P	F		1615-608-1120	S1620-62548 <78286>	.BUSHING,LOWER TRANSMISSION..		EA		4	2	3	7		*	36	20
P	F		1560-567-1096	S1620-62575-1 <78286>	.SUPPORT ASSEMBLY,MAIN..... TRANSMISSION-AFT-LH RPLS-- 1560-098-8275, 1560-326-3447		EA		1	*	2	2		*	36	21
P	F		1560-571-6228	S1620-62575-2 <78286>	.TRANSMISSION SUPPORT..... RPLS-- 1560-098-8276, 1560-326-3448		EA		1	*	*	2		*	36	
P	F		1560-567-1098	S1620-62576-1 <78286>	.SUPPORT ASSEMBLY,MAIN.....		EA		1	*	2	2		*	36	22

(1) SOURCE, MAINT AND REC CODE (a) SOURCE CODE	(b) MAINT LEVEL	(c) REC CODE	(2) FEDERAL STOCK NUMBER	REFERENCE NUMBER	(3) DESCRIPTION	MODELS USABLE ON CH-34C	(4) UNIT OF ISSUE	(5) QTY INC IN UNIT PACK	(6) QTY INC IN UNIT	(7) 30-DAY DS GS MAINT ALW (a) 1-20	(b) 21-50	(c) 51-100	(8) 1-YR ALW PER 100 EQUIP CNTGCY	(9) DEPOT MAINT ALW PER 100 EQUIP	(10) ILLUSTRATION (a) FIG NO	(b) ITEM NO
					CONTINUED										36	22
					TRANSMISSION-FORWARD-LH											
					RPLS-- 1560-098-8273,											
					1560-326-3445											
P	F		1560-566-3234	S1620-62576-2 <78286>	.SUPPORT ASSEMBLY,MAIN.....		EA		1	*	2	2		*	36	
					TRANSMISSION-FORWARD-RH											
					RPLS-- 1560-098-8274,											
					1560-326-3446											
					ATTACHING PARTS											
			5306-810-6376	AN178H13 <88044>	.BOLT.....		EA		4						36	23
			5310-167-0806	AN960C816 <88044>	.WASHER,FLAT.....		HD		8	*	*	*		*	36	24
			5310-285-5638	AN364-820C <88044>	.NUT,SELF-LOCKING,HEXAGON....				4	*	*	*		*	36	25
			5306-527-4562	MS20012-19 <96906>	.BOLT,INTERNAL WRENCHING.....		EA		1	*	*	*		*	36	26
P	F		1560-637-3400	S1620-61545 <78286>	.WASHER,THRUST.....		EA		1	2	6	11		*	36	27
			5310-149-9119	MS20002C12 <96906>	.WASHER,RECESSED.....		HD		1	*	*	*		*	36	28
P	F		5310-638-5730	2452-126 <72962>	.NUT,SELF-LOCKING,BARREL.....		EA		1	*	*	*		*	36	29
			5306-950-0125	NAS634-48 <80205>	.BOLT,MACHINE.....		EA		1	*	*	*		*	36	30
			5310-282-4776	MS20002-14 <96906>	.WASHER,PLAIN.....		EA		1	*	*	*		*	36	31
			5310-149-9120	MS20002C14 <96906>	.WASHER,RECESSED.....		HD		1	*	*	*		*	36	32
			5310-297-3715	EB144 <72962>	.NUT.....		EA		1	*	*	*		*	36	33
					---*---											
P	F		1560-564-1530	S1620-61194-2 <78286>	.CLIP,FUSELAGE,FORWARD.....		EA		8	2	3	6		*	36	34
					RPLS-- 1560-336-0747,											
					1560-563-9851											

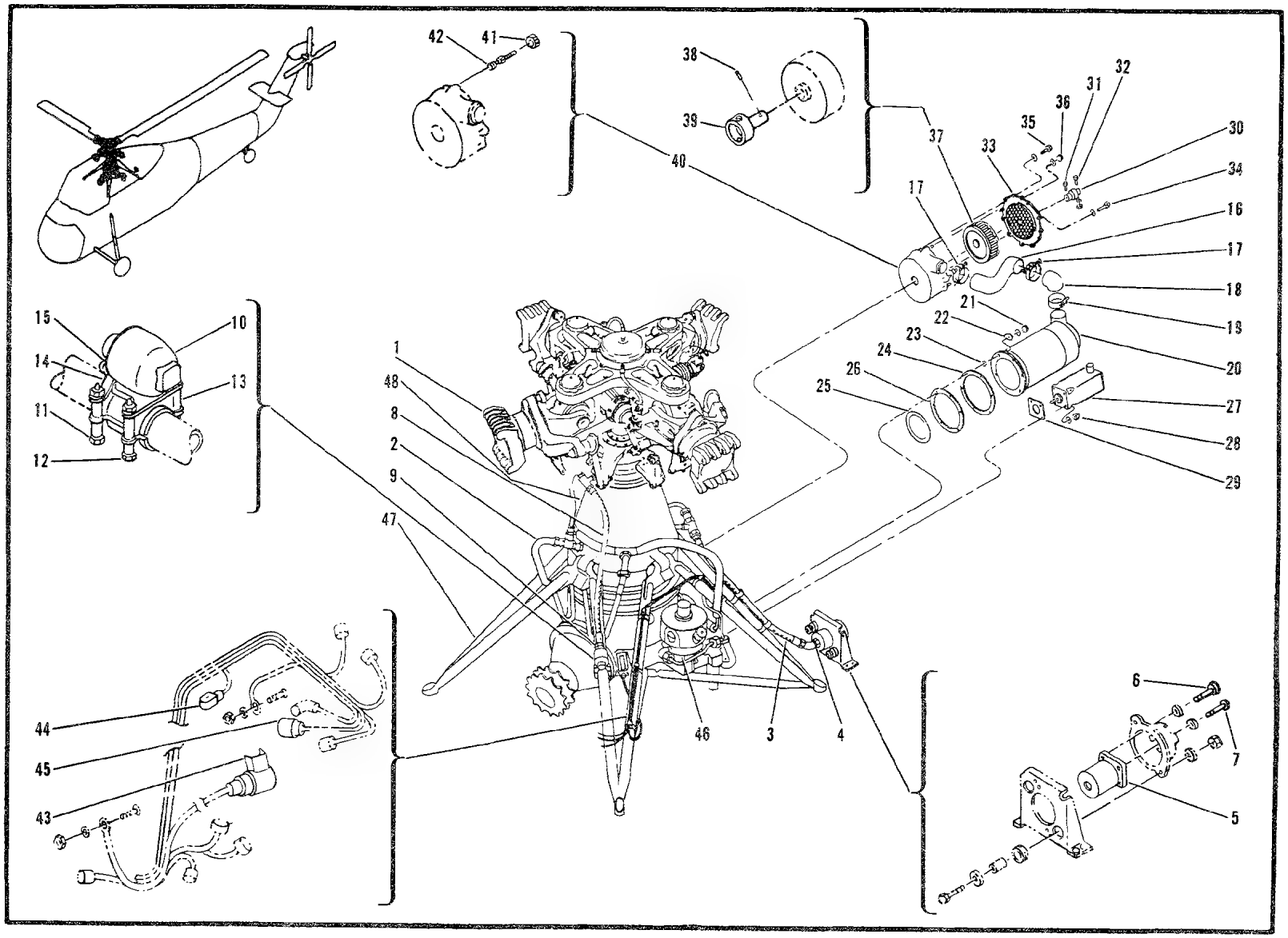

Figure 11. Main Rotor and Transmission Assembly

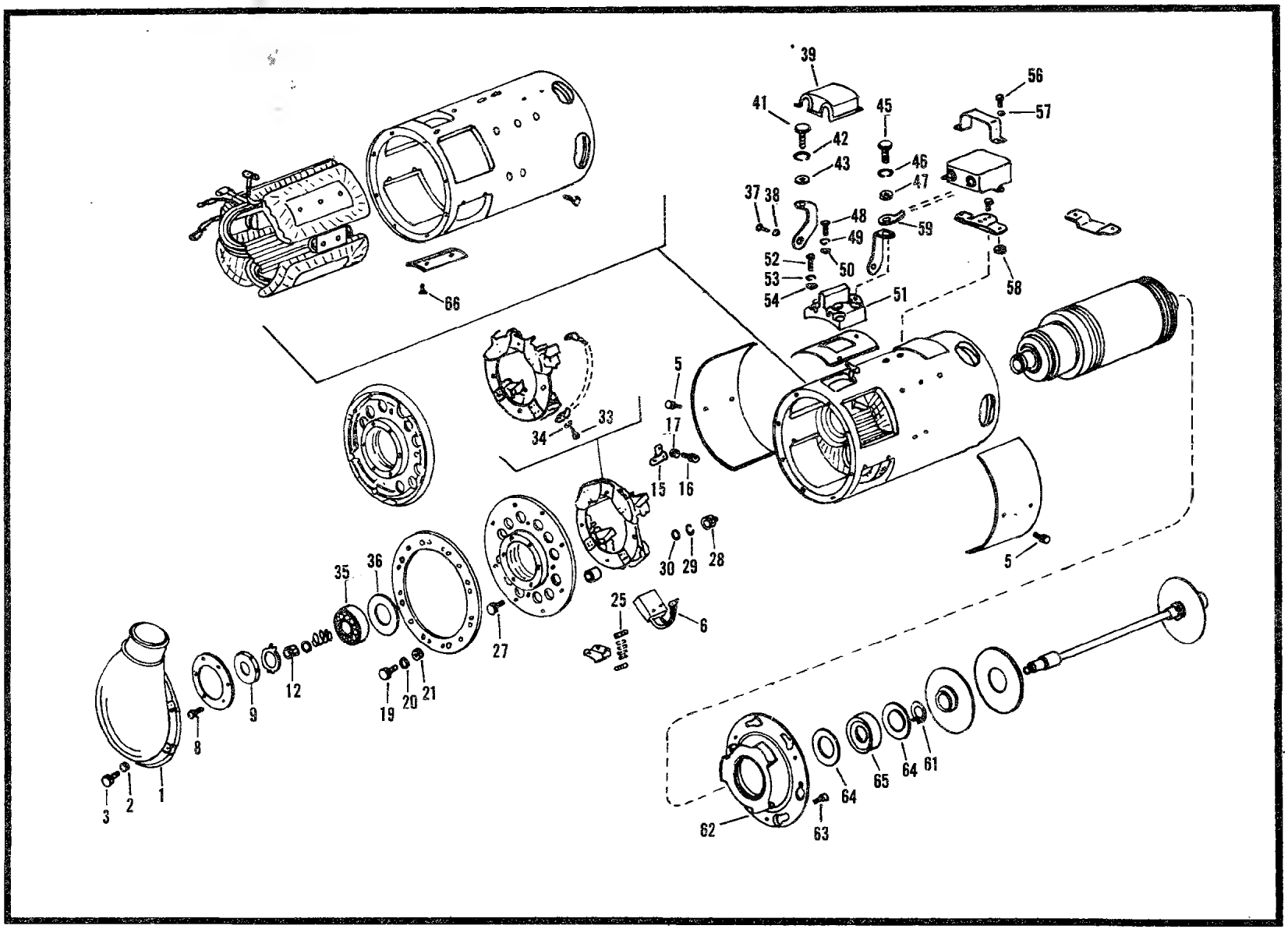

Figure 11D. Generator, Direct Current

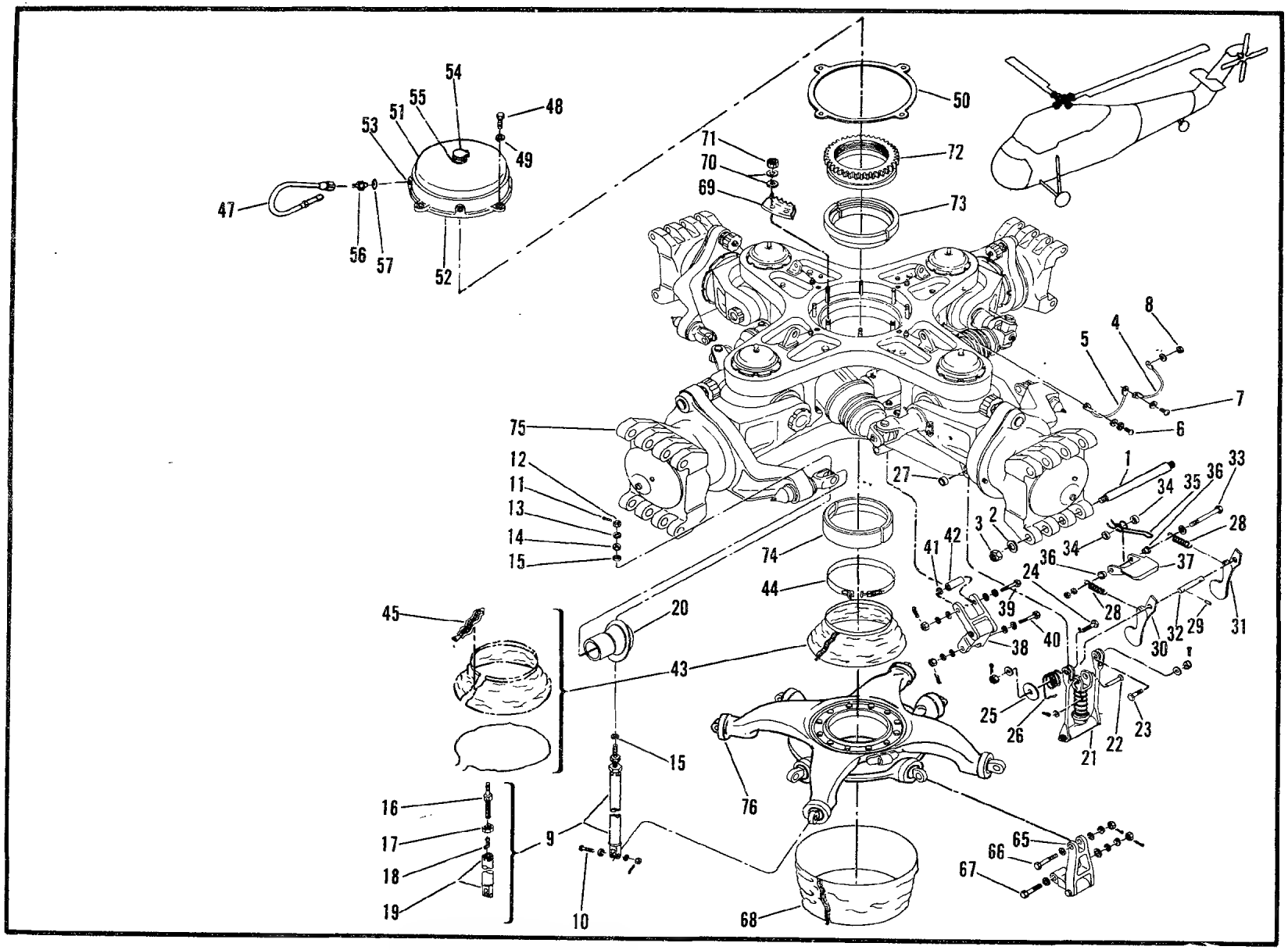

Figure 12. Rotor Head Assembly, Main

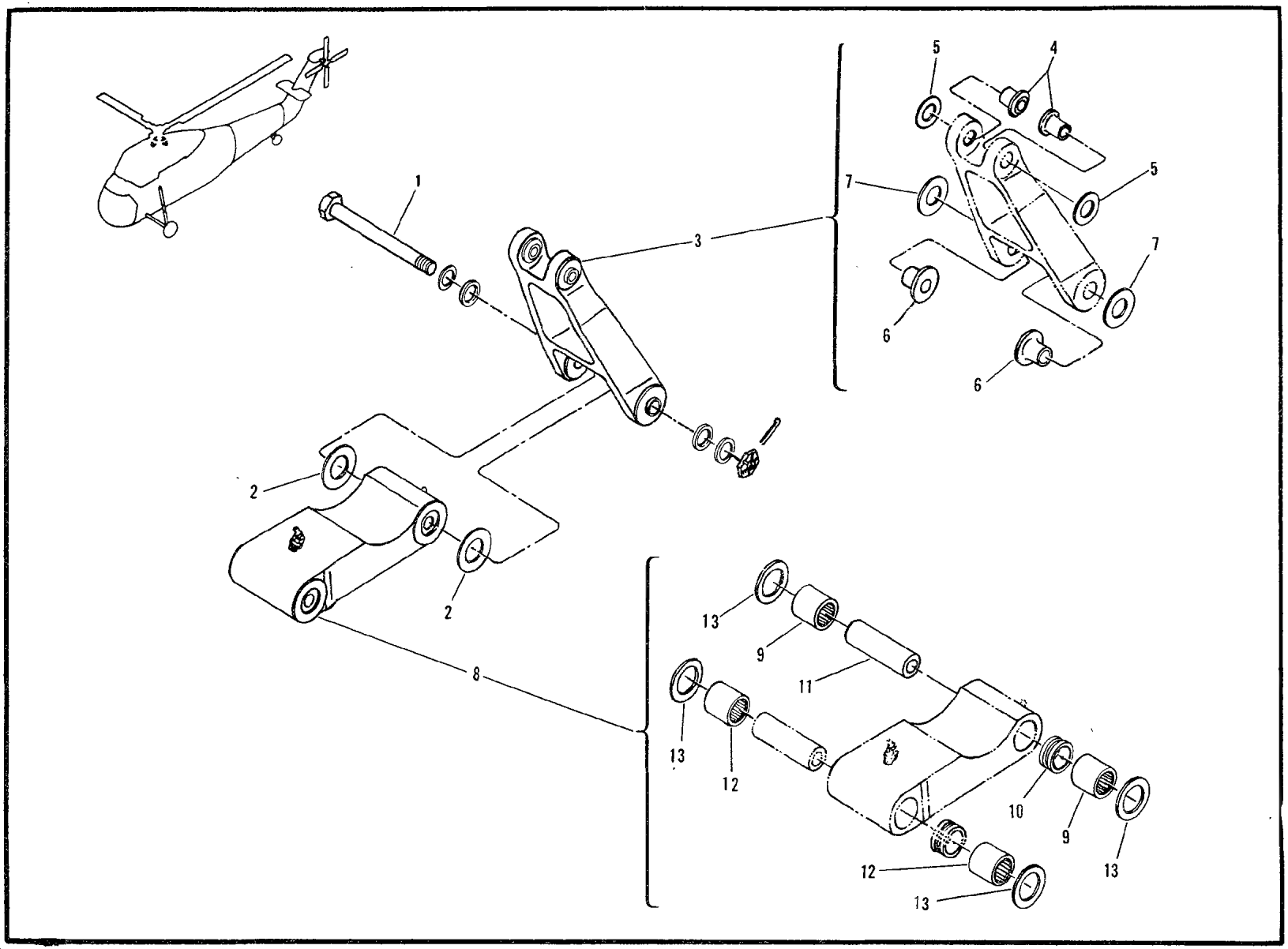

Figure 13. Scissor Assembly- Stationary Star

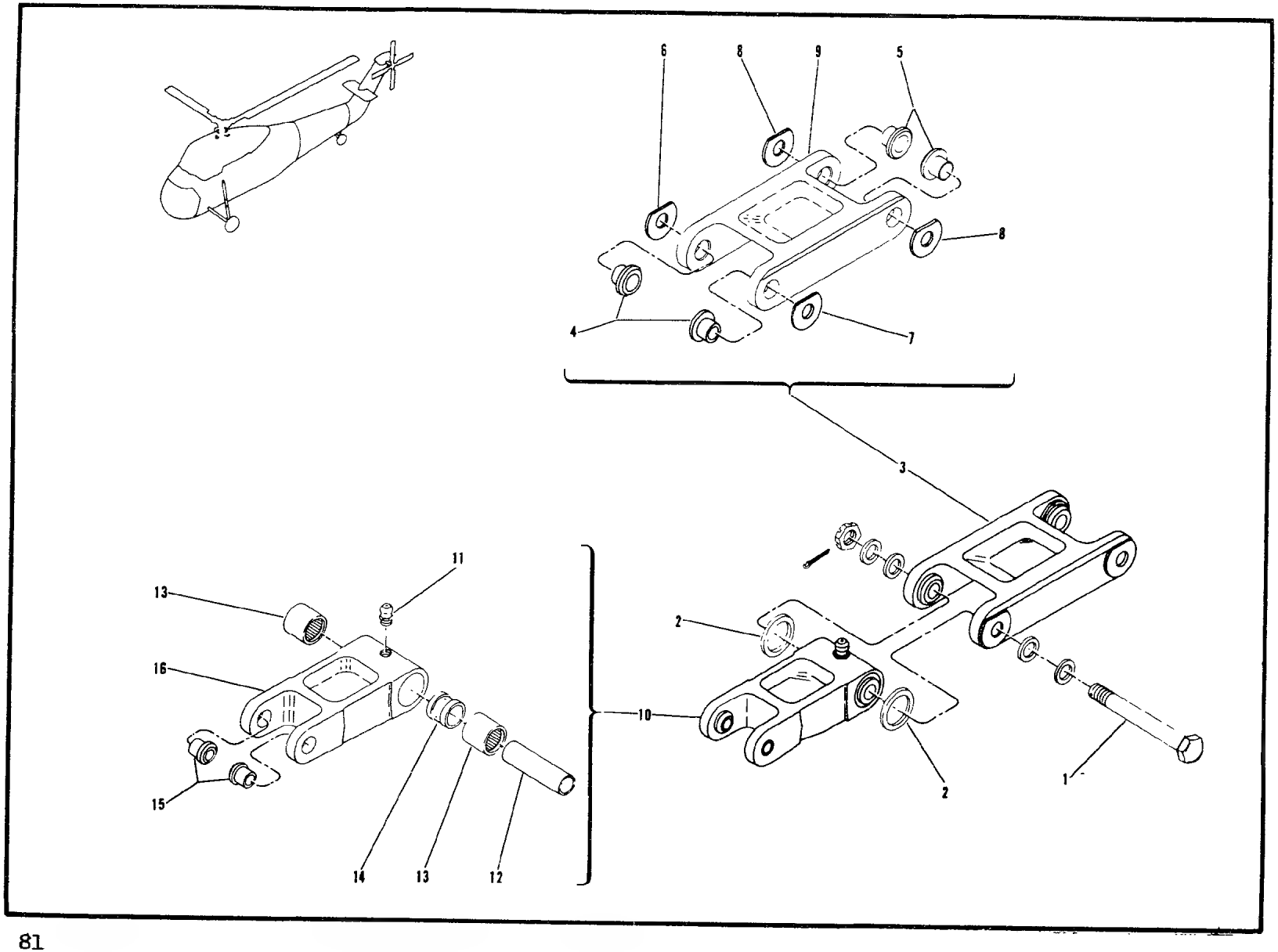

Figure 14. Scissor Assembly-Rotating Star

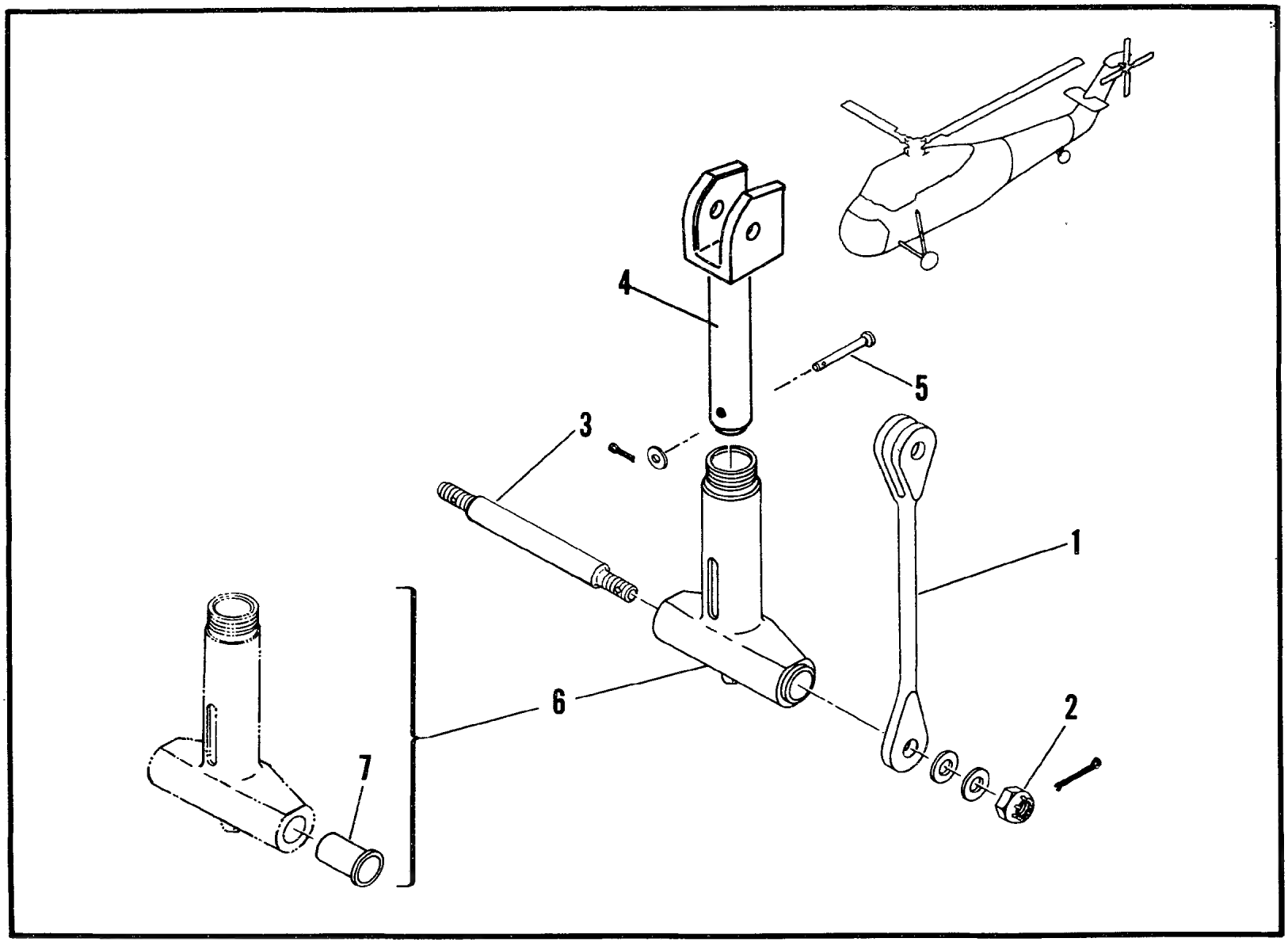

Figure 15. Restrainer Assembly, Anti-Flapping

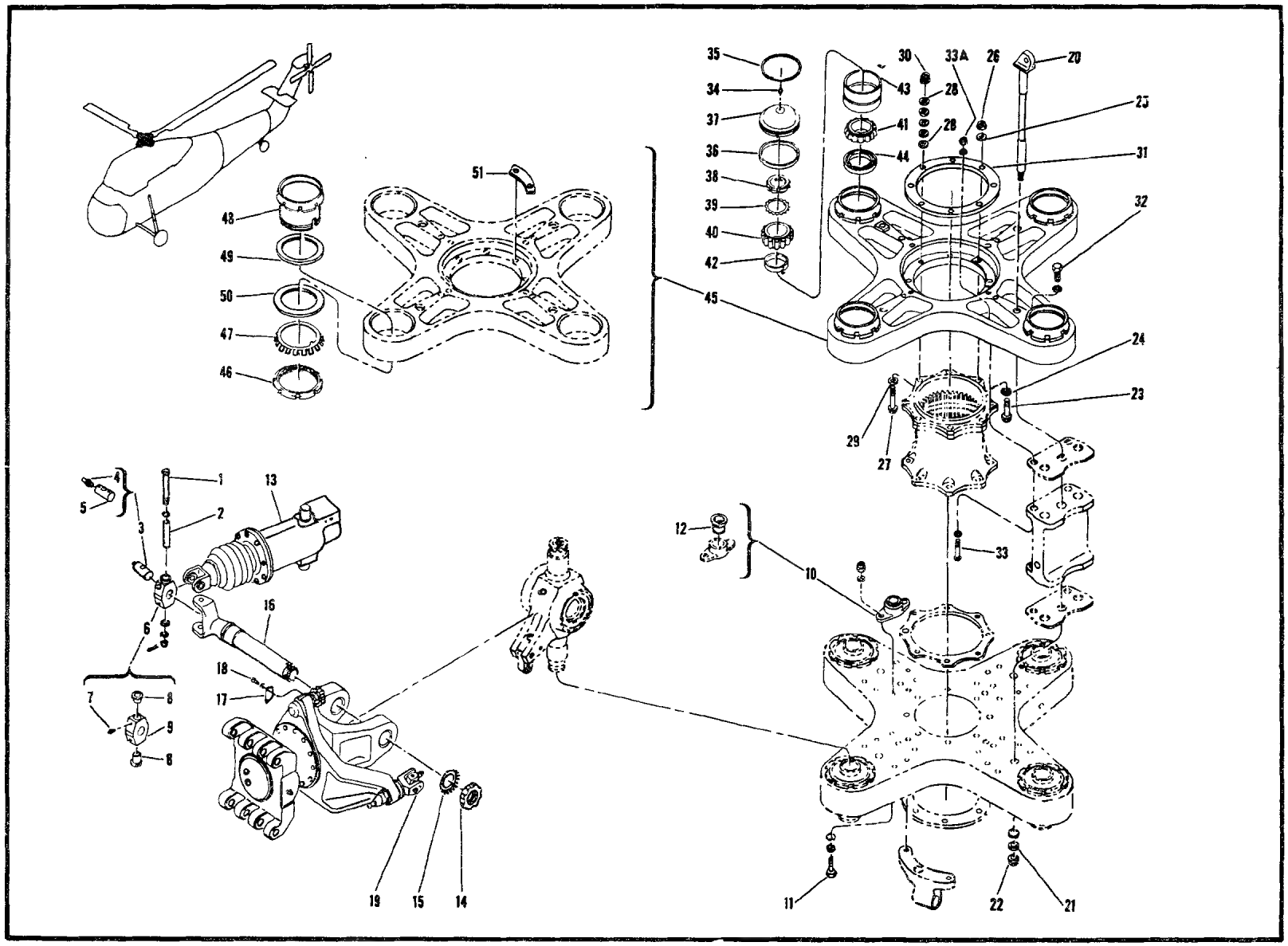

Figure 16. Hub Assembly, Main Rotor (Sheet 1 of 2)

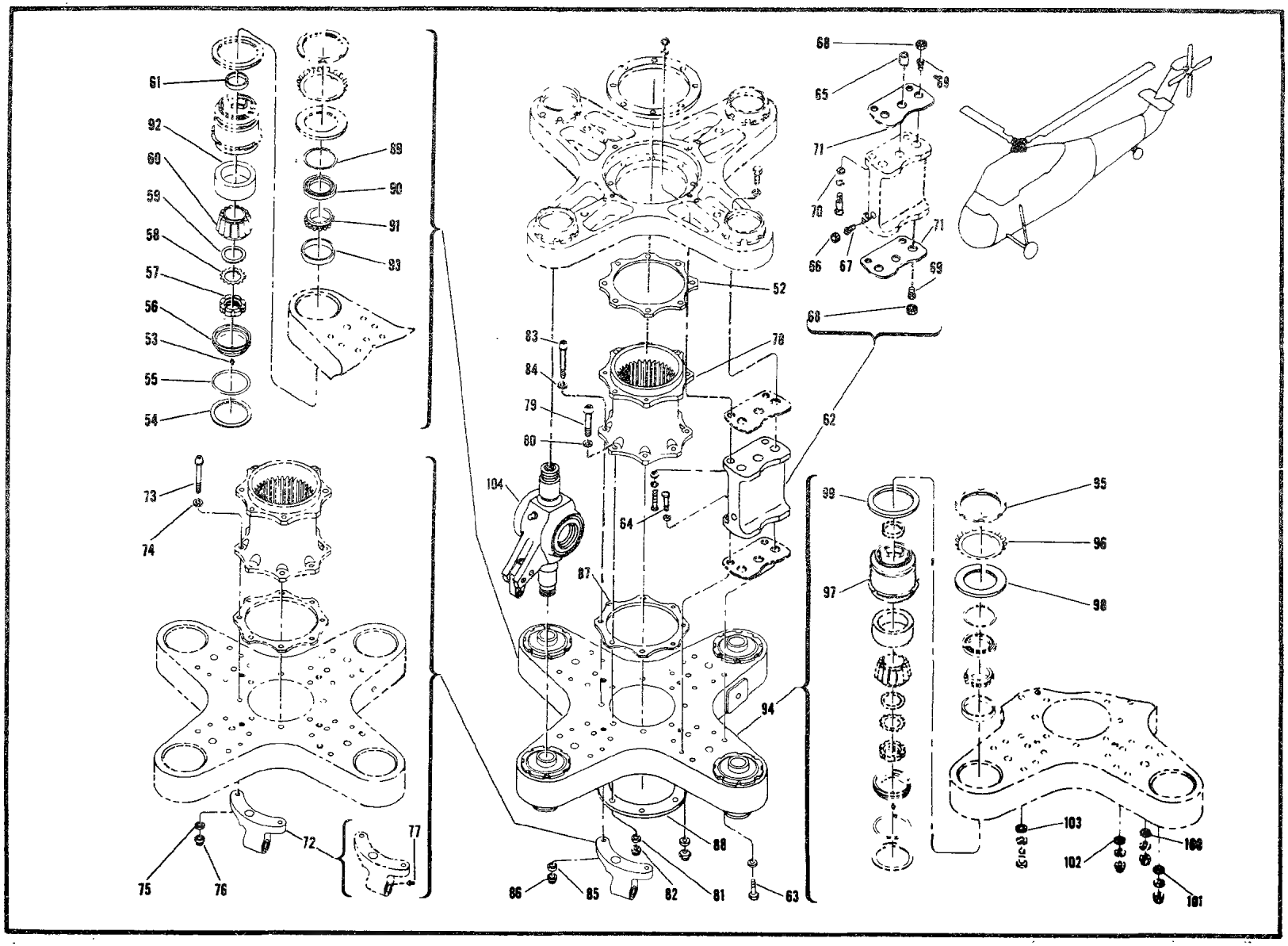

Figure 16. Hub Assembly, Main Rotor (Sheet 2 of 2)

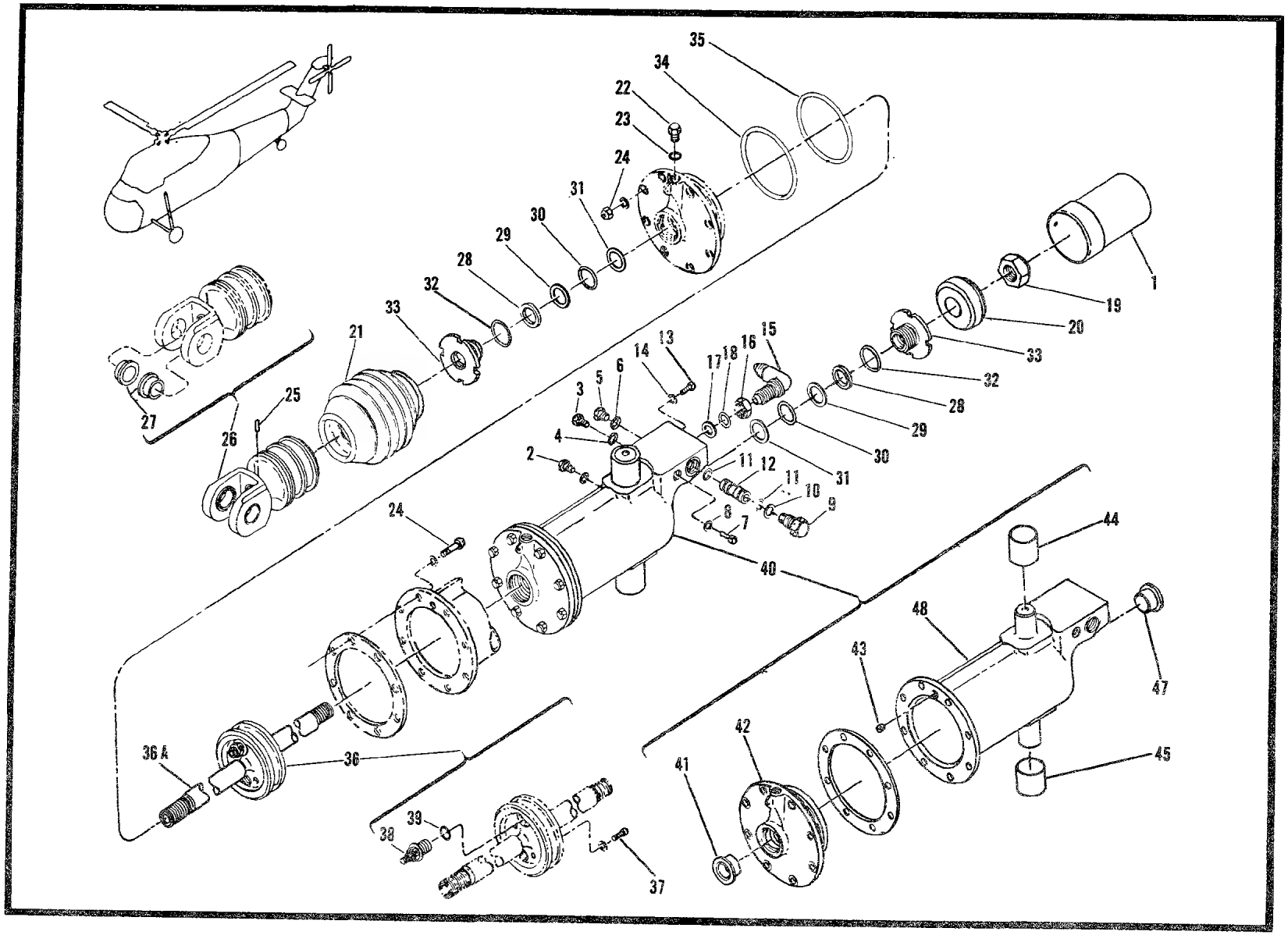

Figure 17. Damper Assembly, Main Rotor

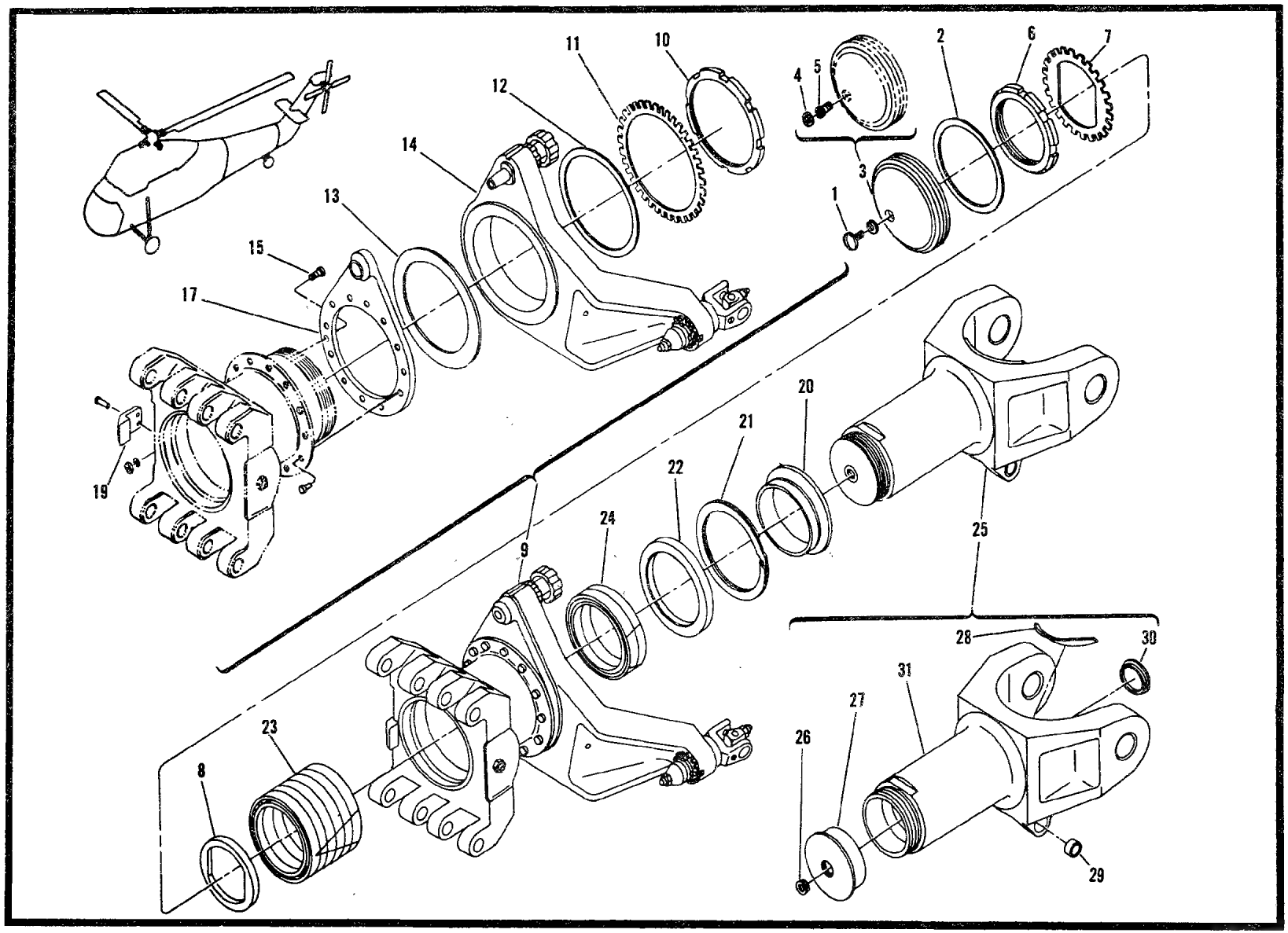

Figure 18. Sleeve - Spindle Assembly

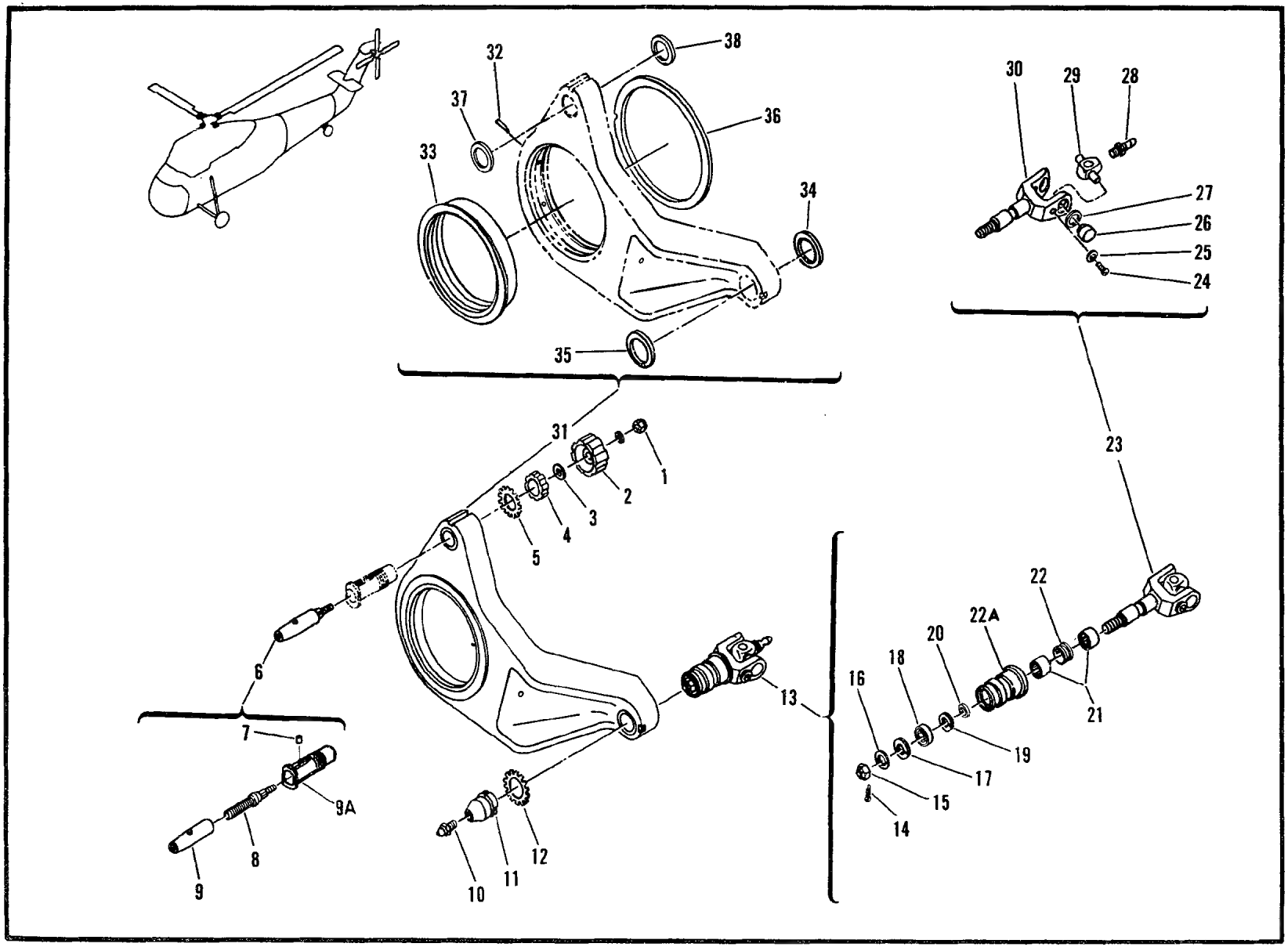

Figure 19. Horn Assembly

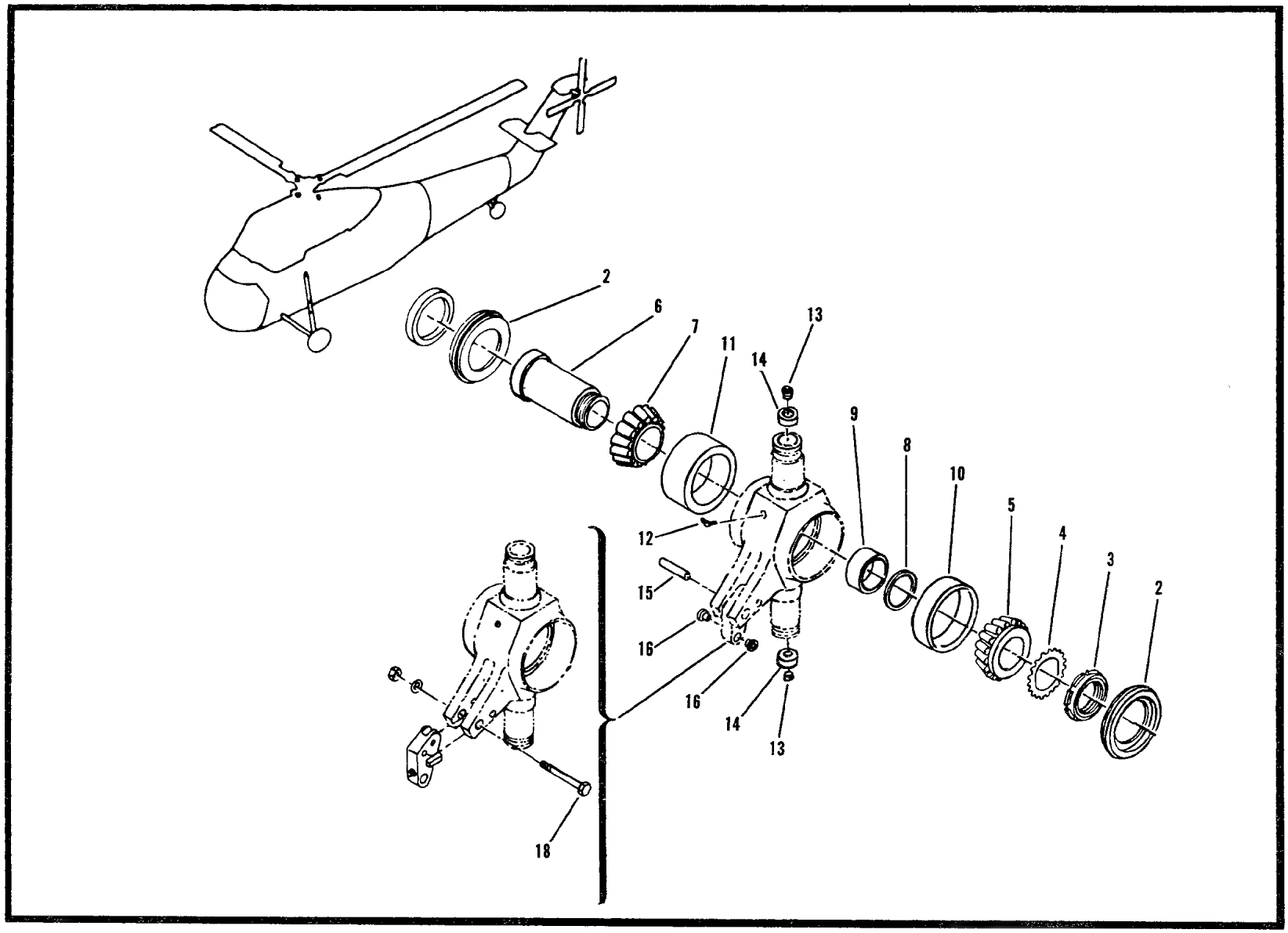

Figure 20. Hinge Assembly, Main Rotor Hub

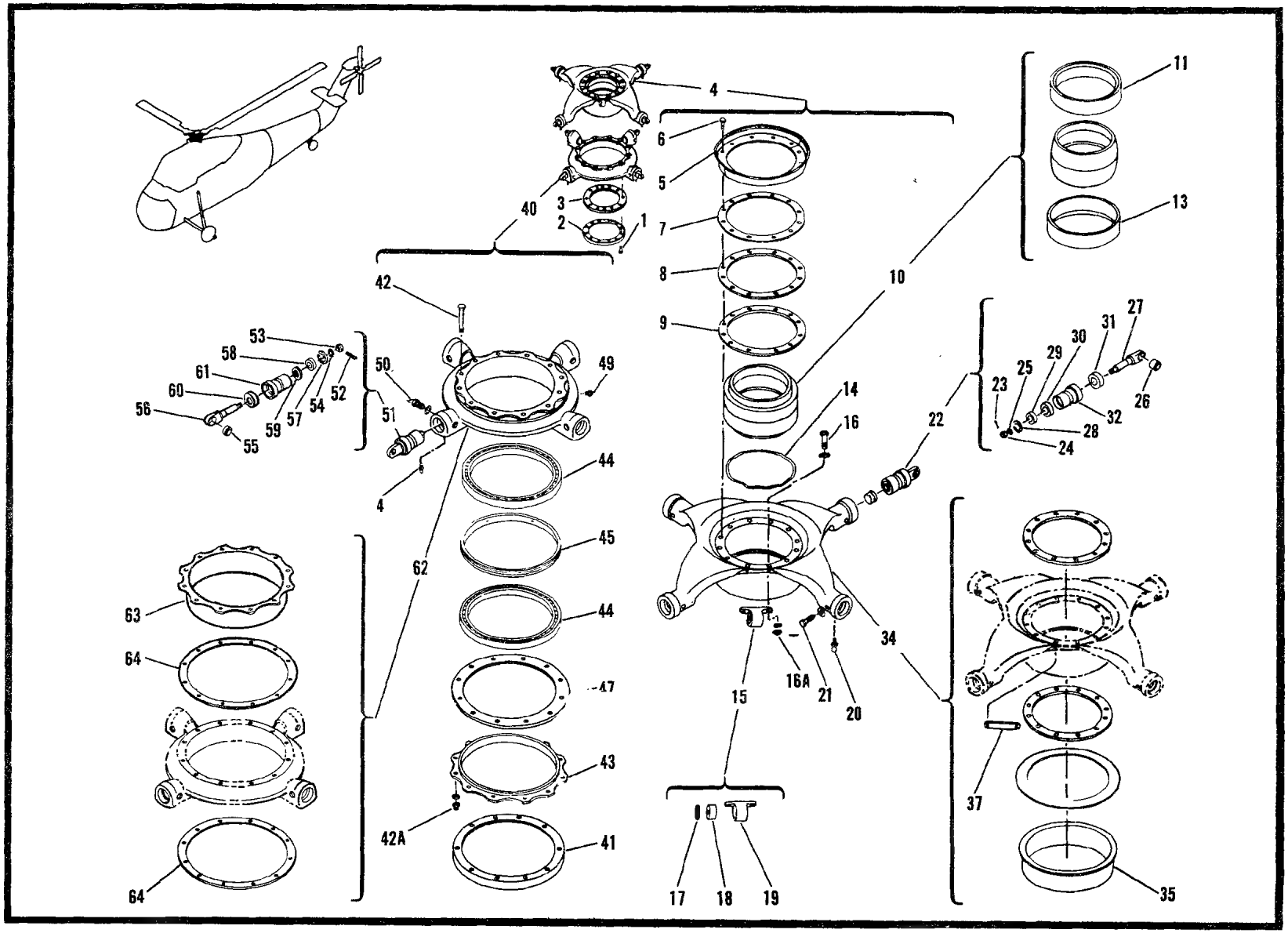

Figure 21. Star Assembly, Main Rotor Azimuth Control

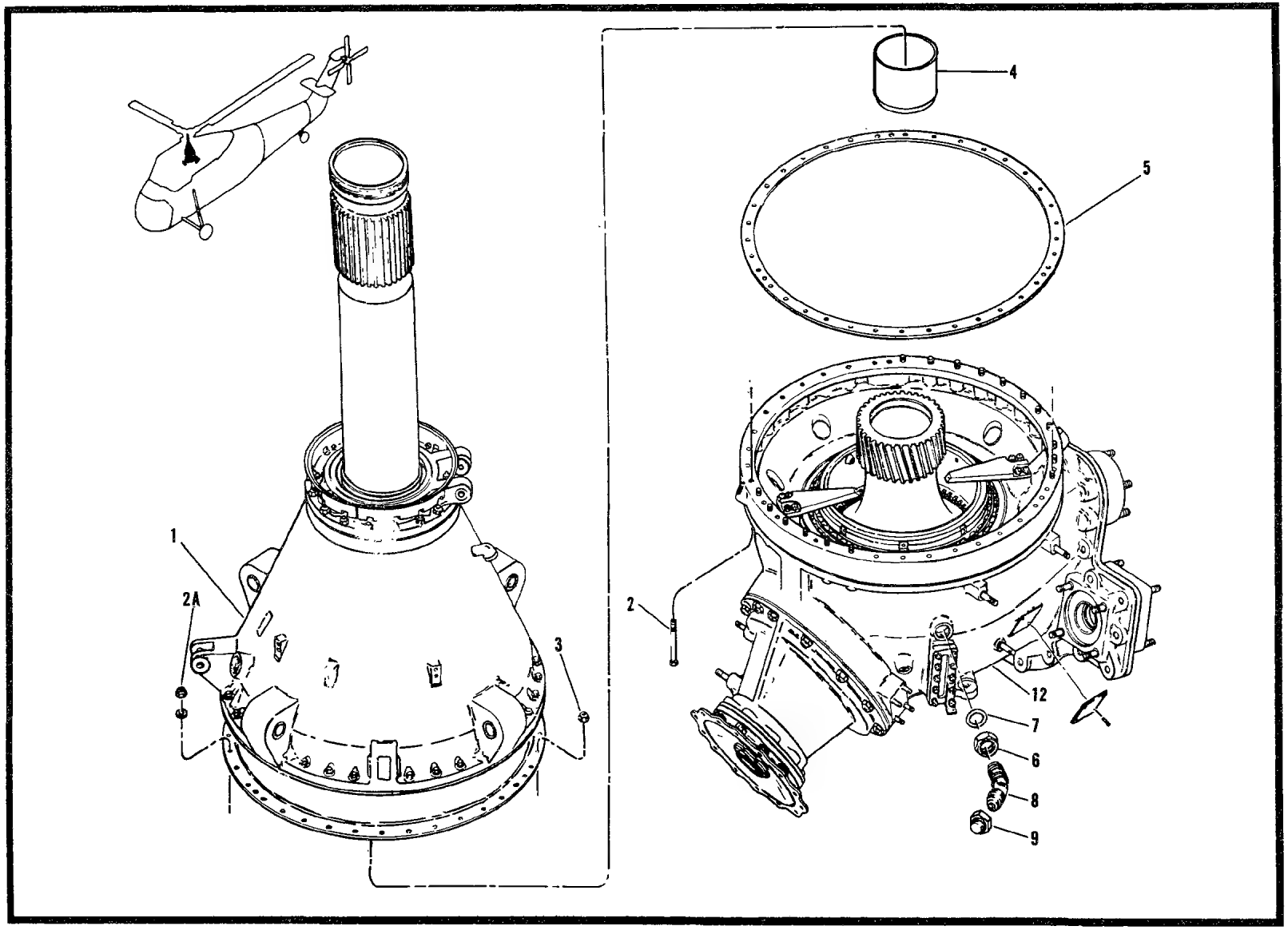

Figure 22. Gear Box Assembly

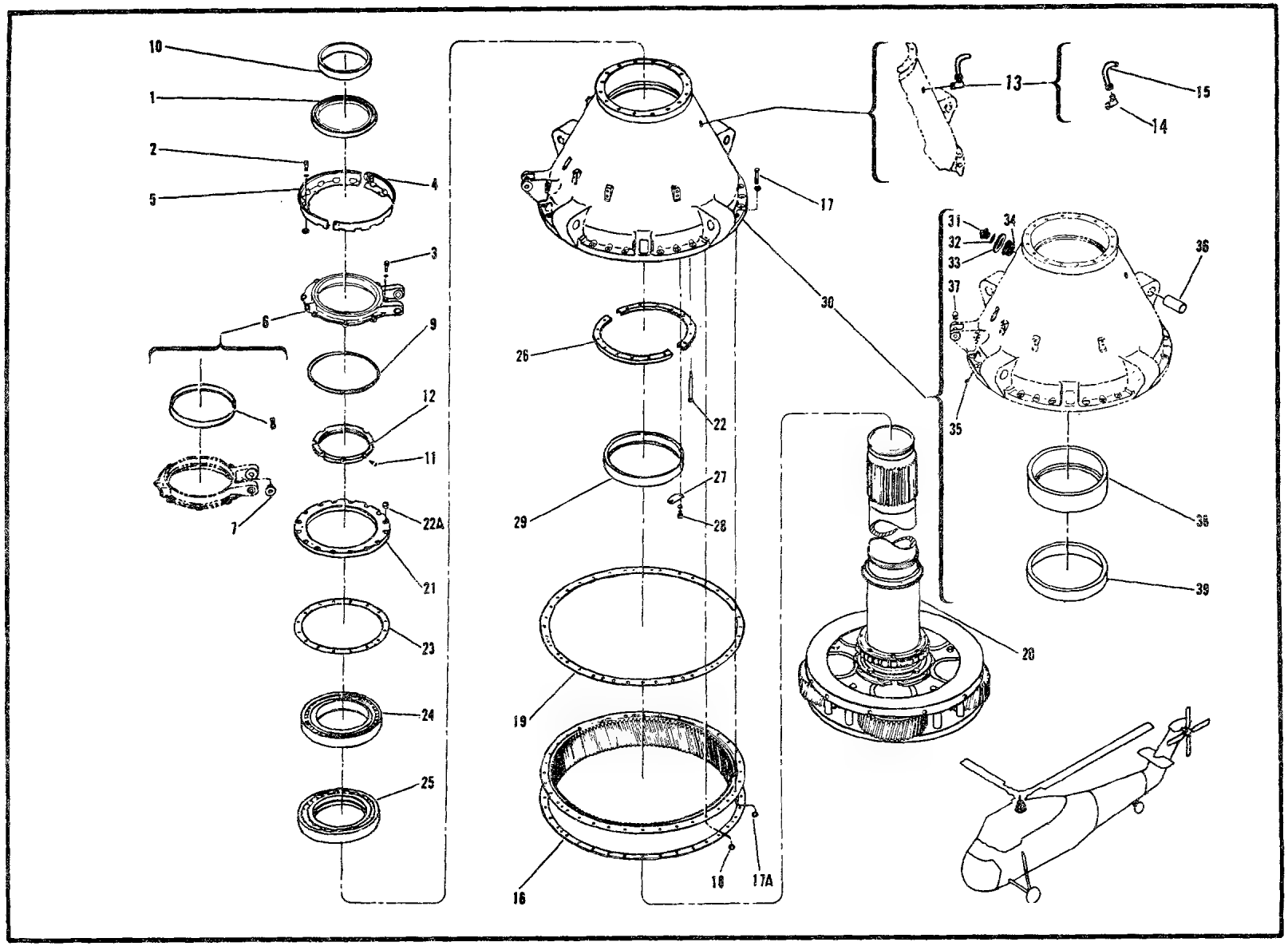

Figure 23. Housing and Shaft Assembly Upper

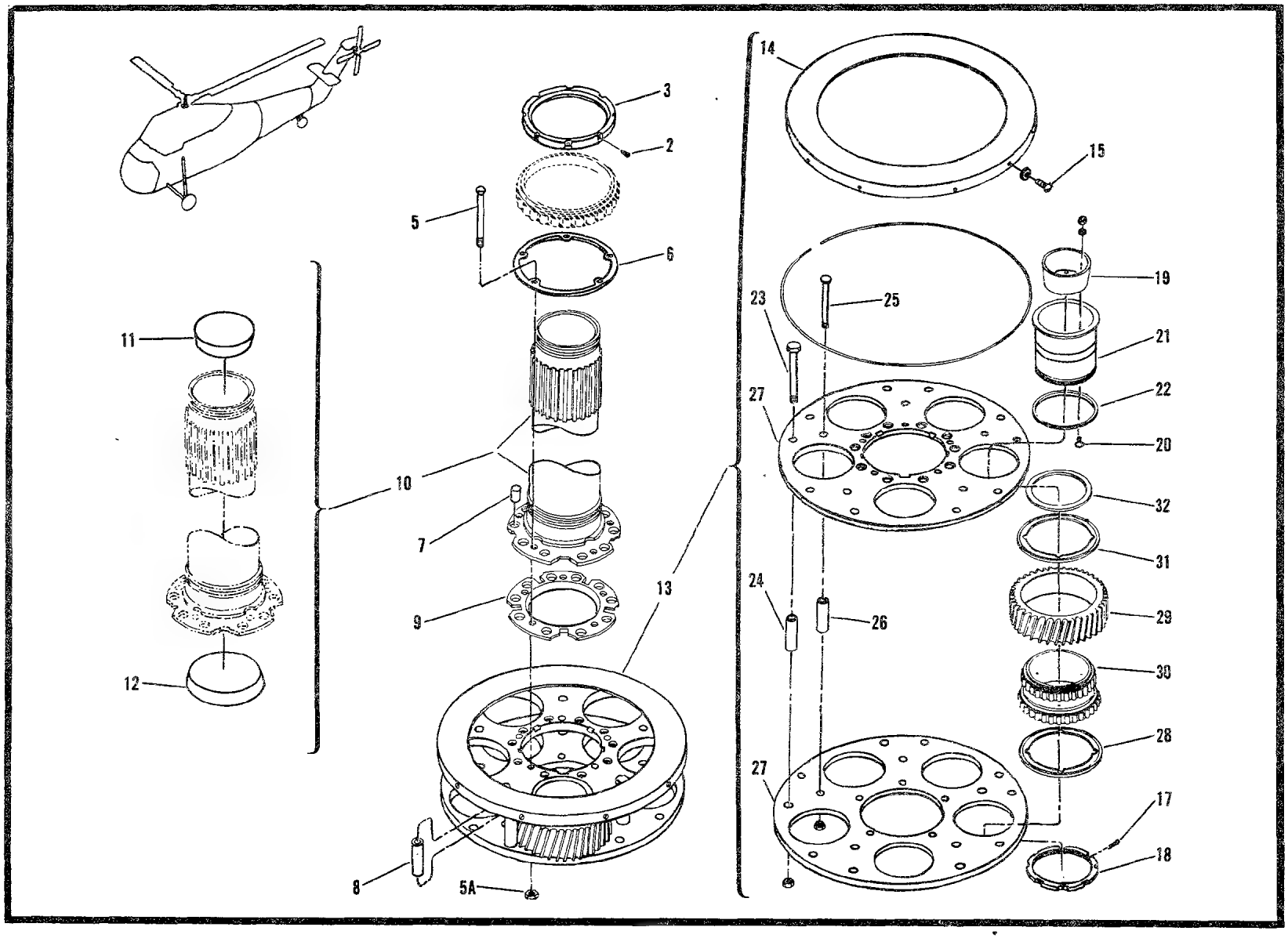

Figure 24. Shaft and Planetary Assembly

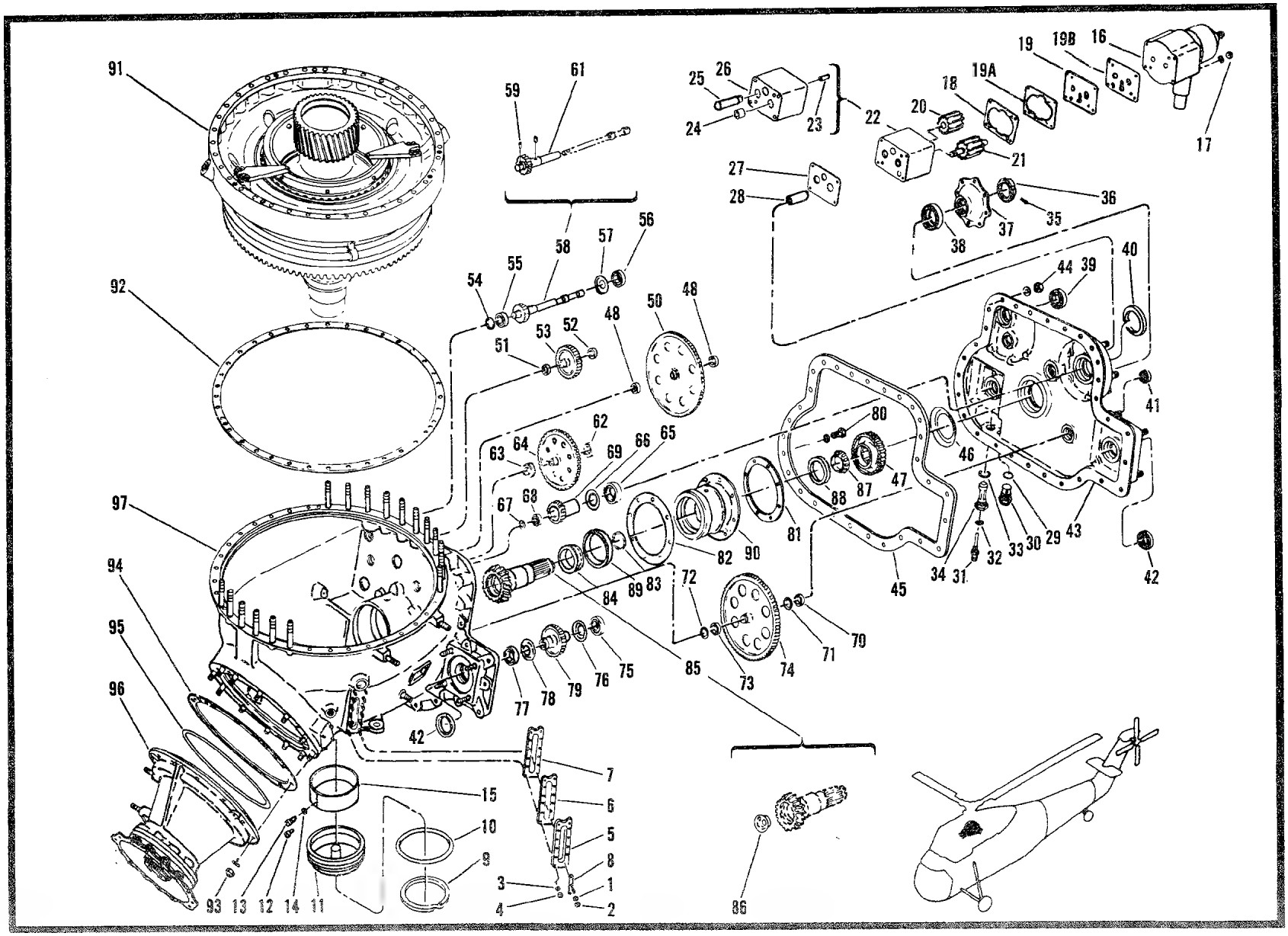

Figure 25. Housing Assembly, Main Transmission

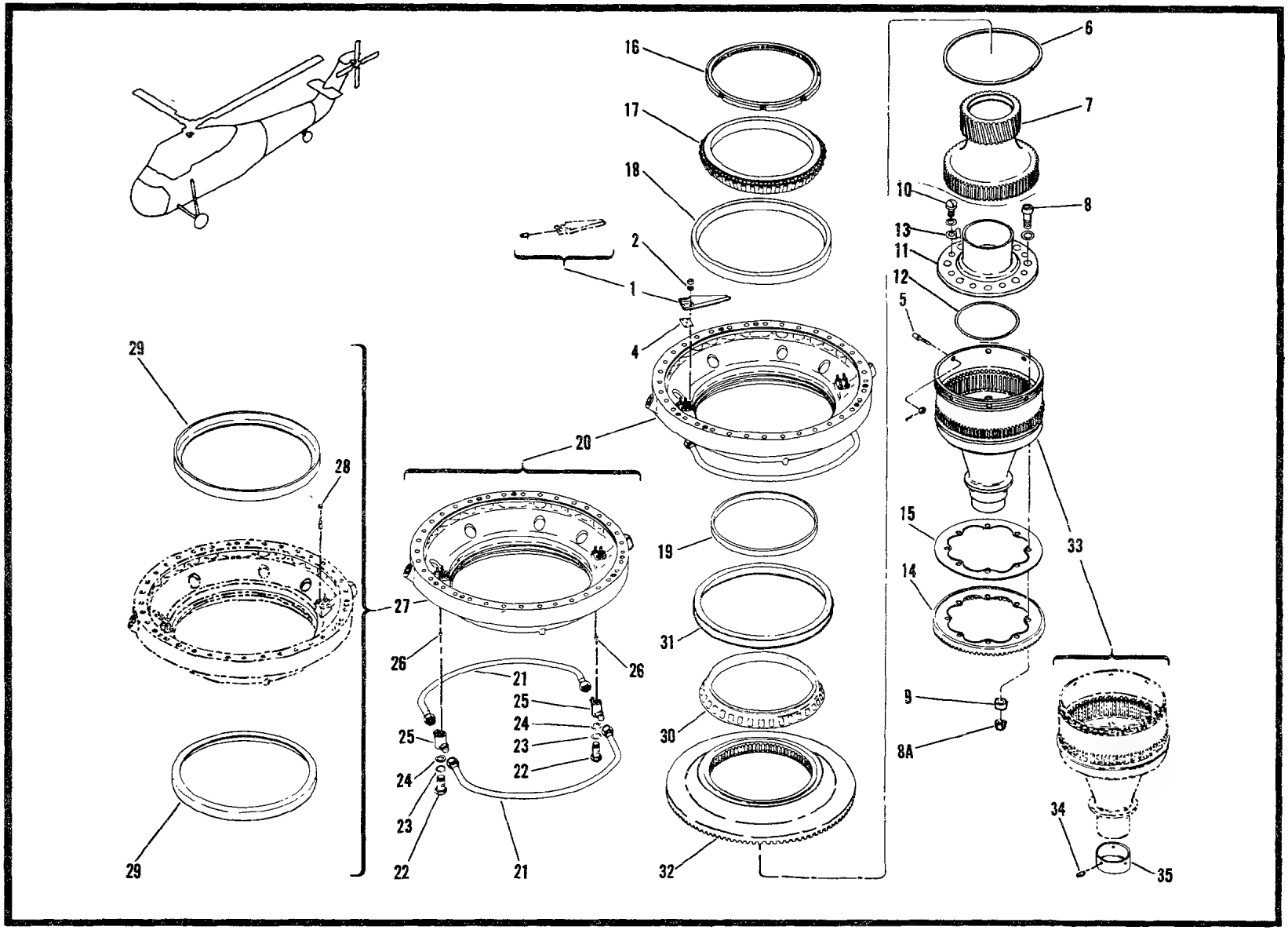

Figure 26. Support and Shaft Assembly

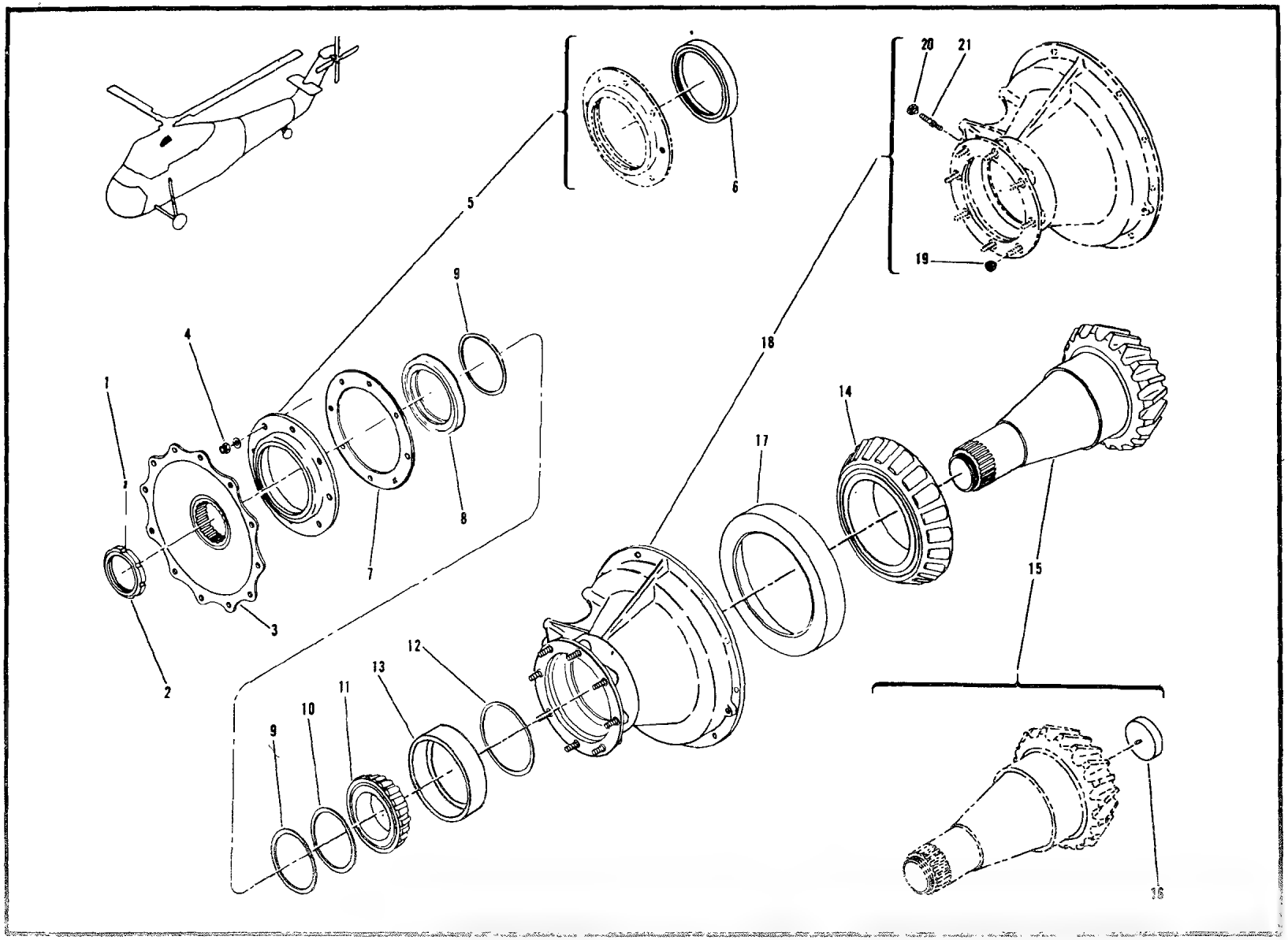

Figure 27. Housing and Gear Assembly

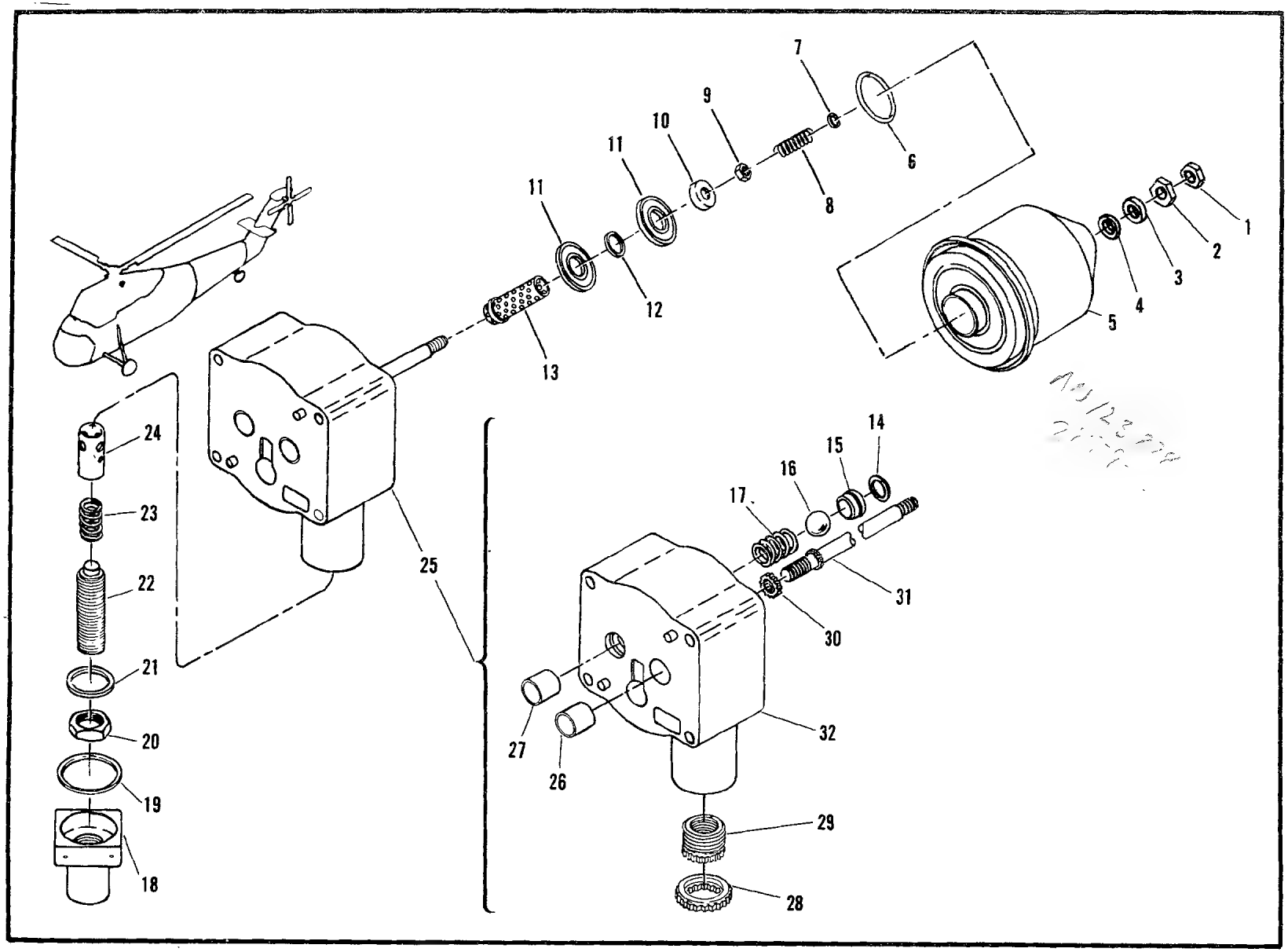

Figure 28. Cover Assembly, Main Transmission

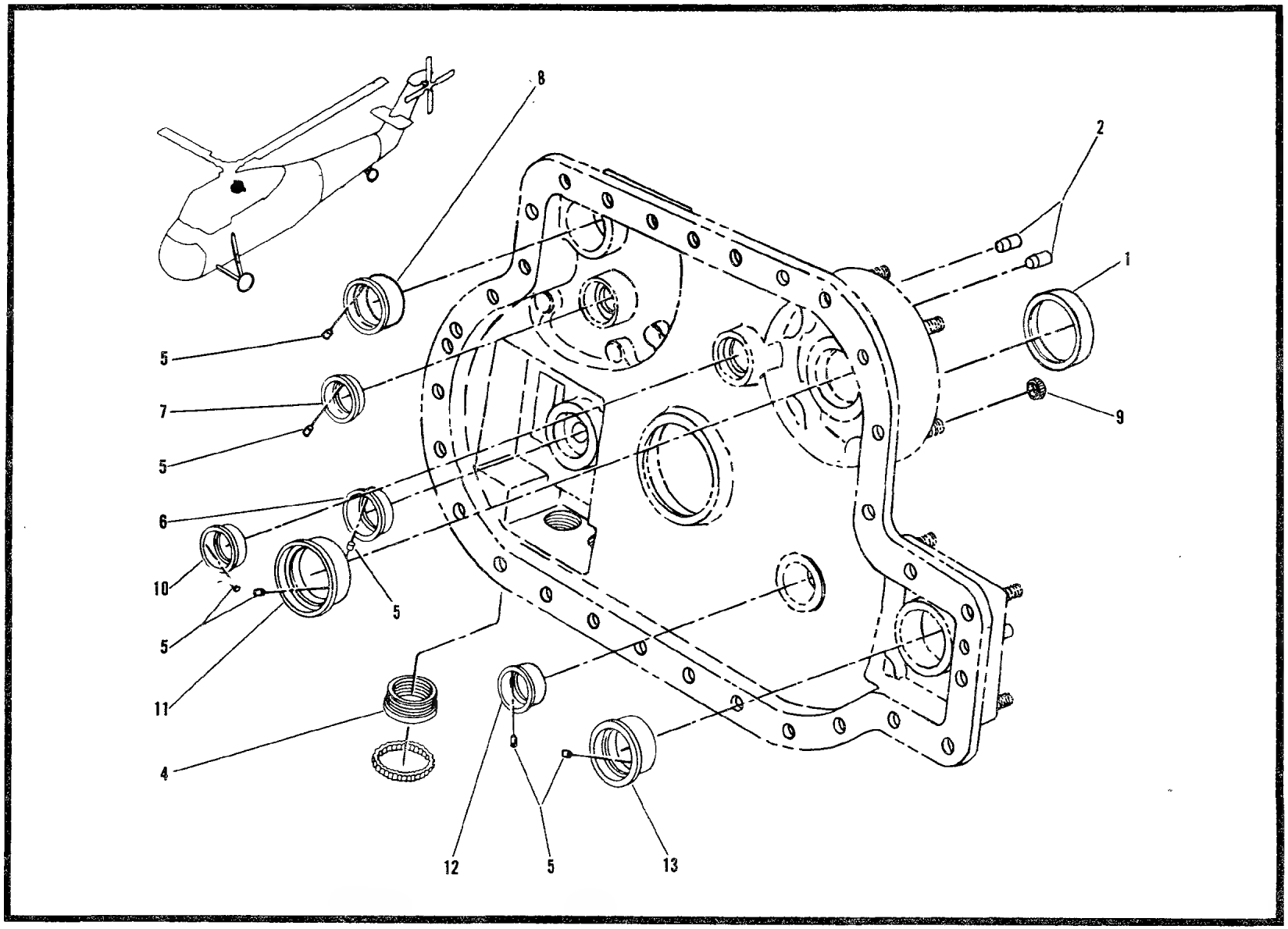

Figure 29. Cover Assembly, Housing

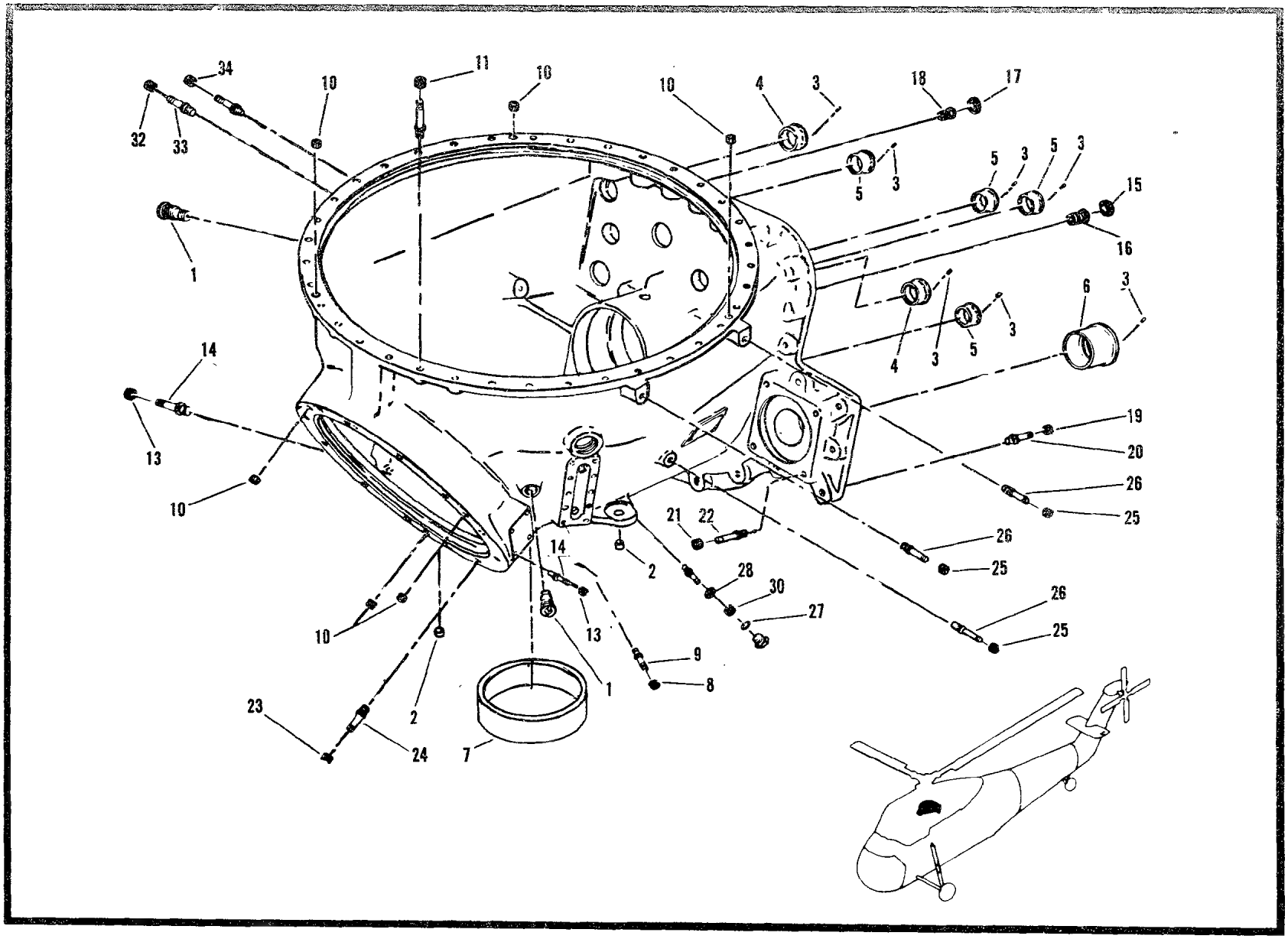

Figure 30. Liner and Stud Assembly

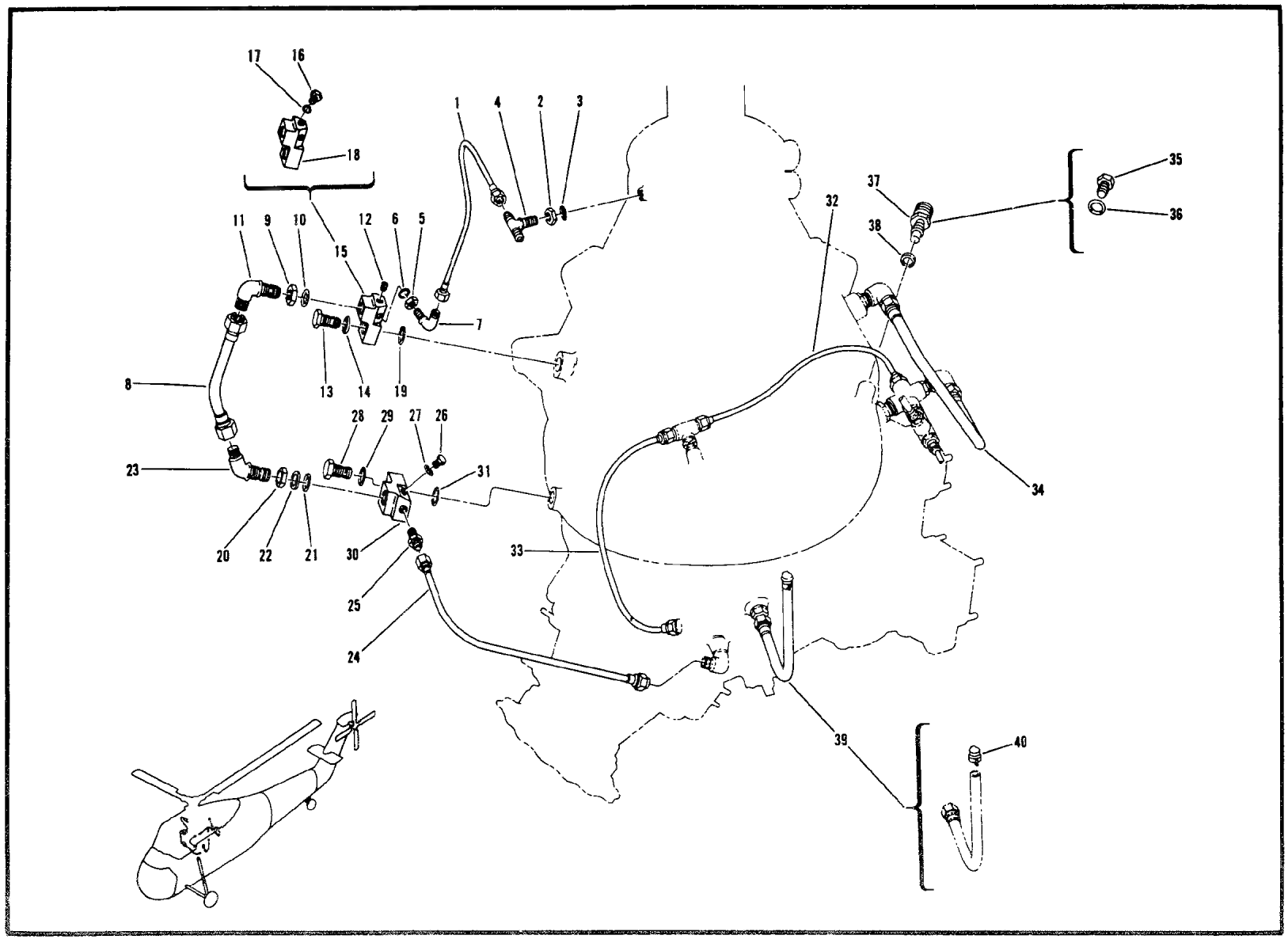

Figure 31. Main Gear Box Oil Separator Installation

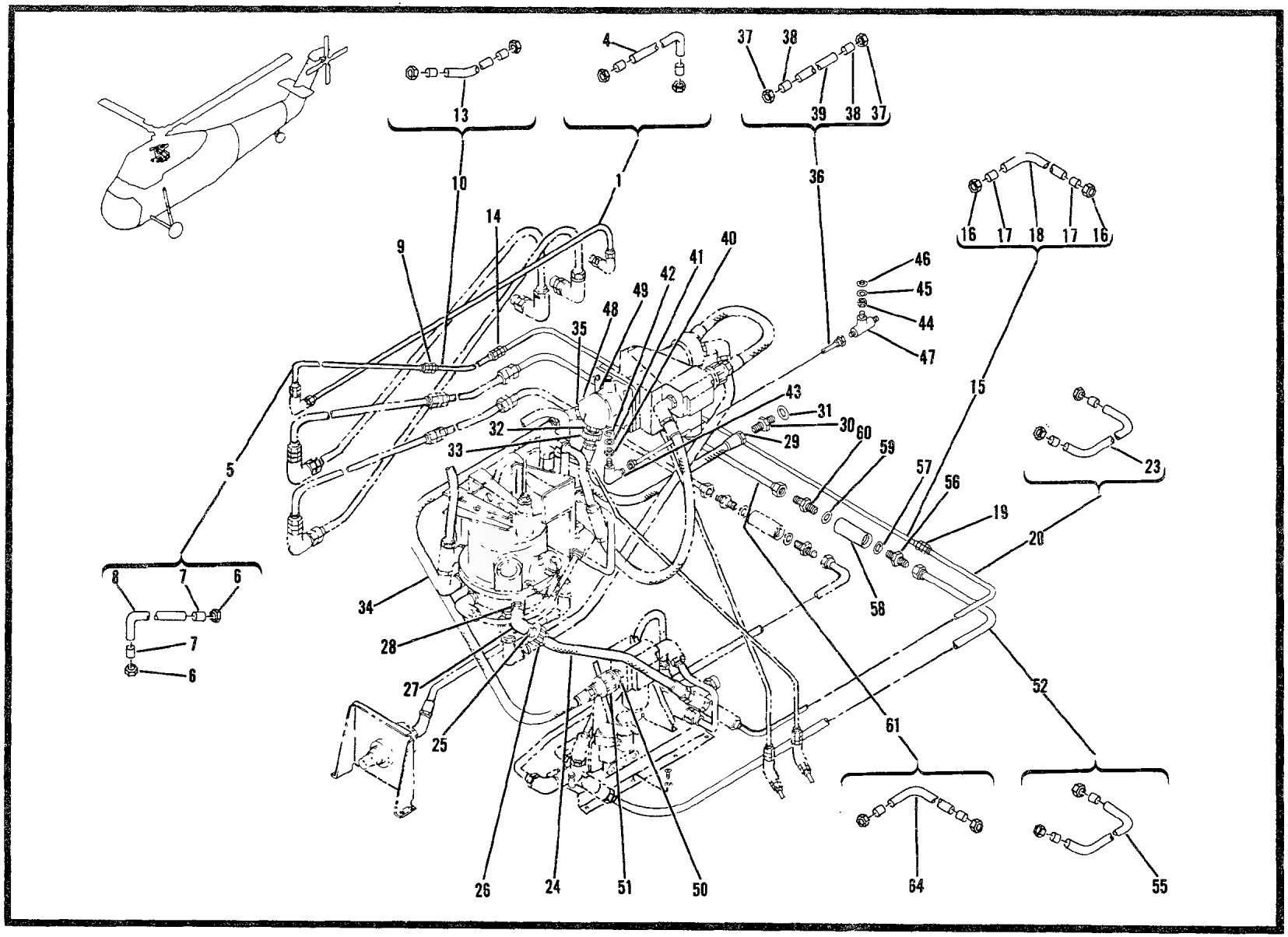

Figure 32. Main Rotor Servo Hydraulic System Installation (Sheet 1 of 4)

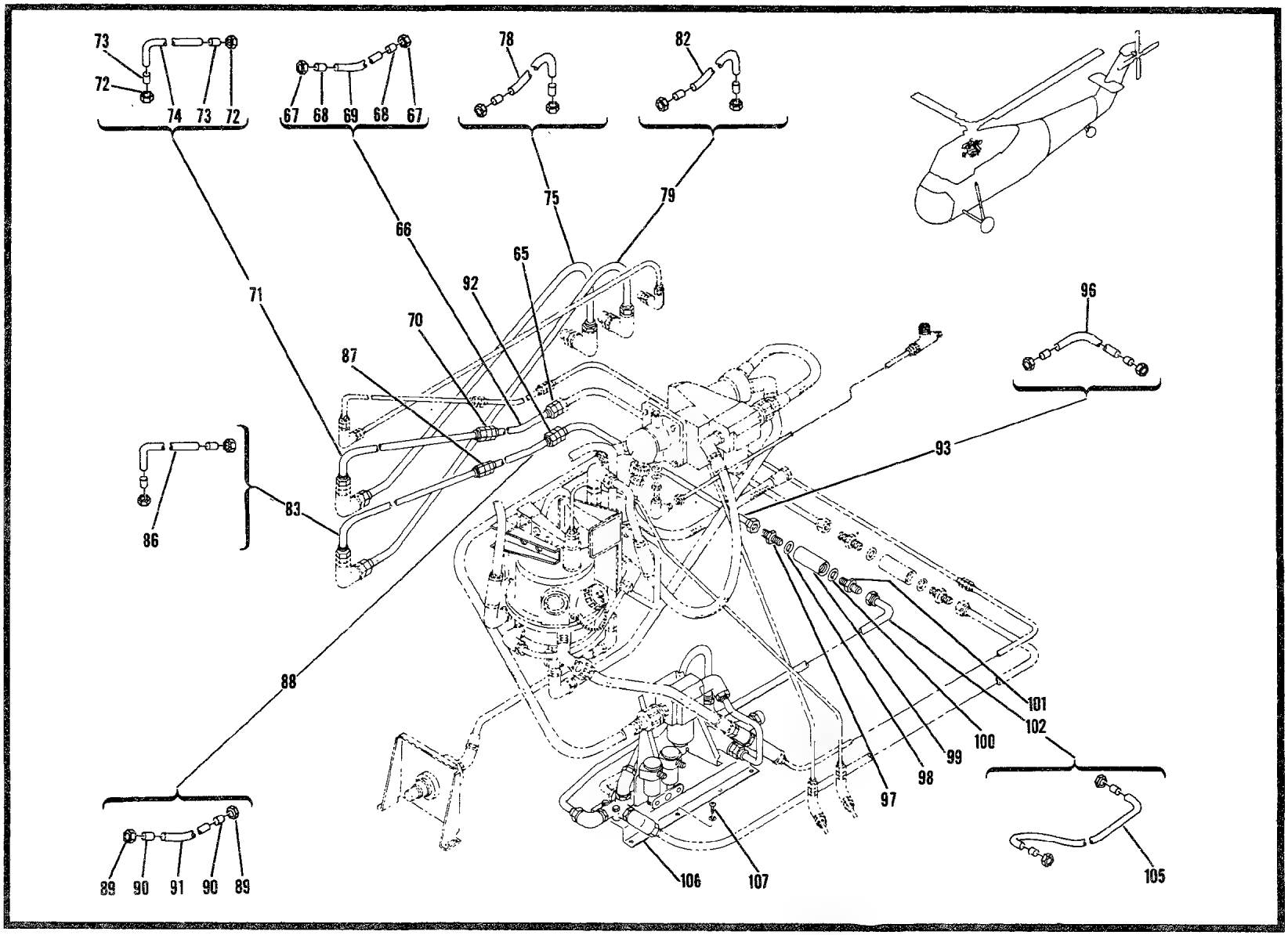

Figure 32. Main Rotor Servo Hydraulic System Installation (Sheet 2 of 4)

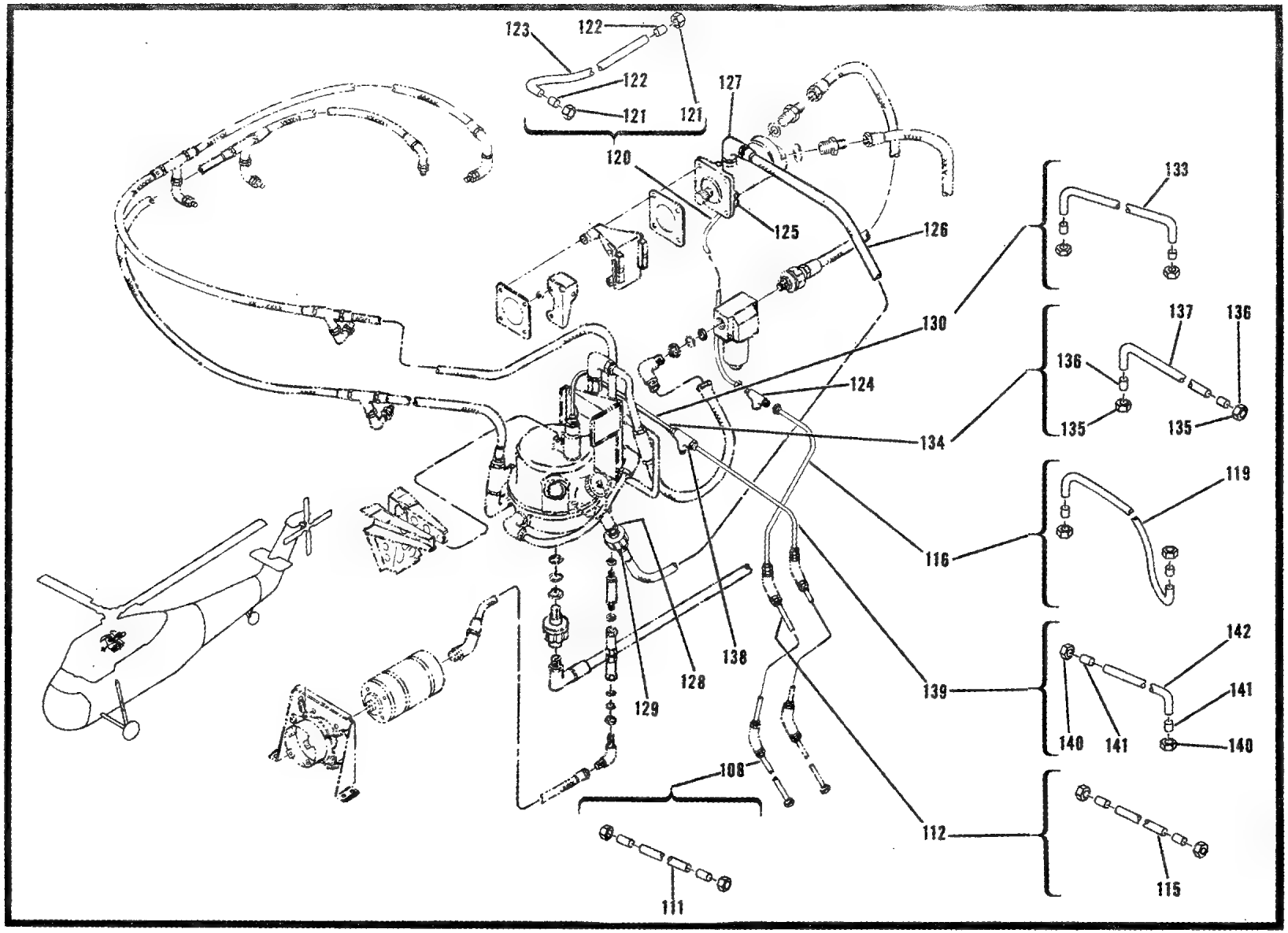

Figure 32. Main Rotor Servo Hydraulic System Installation (Sheet 3 of 4)

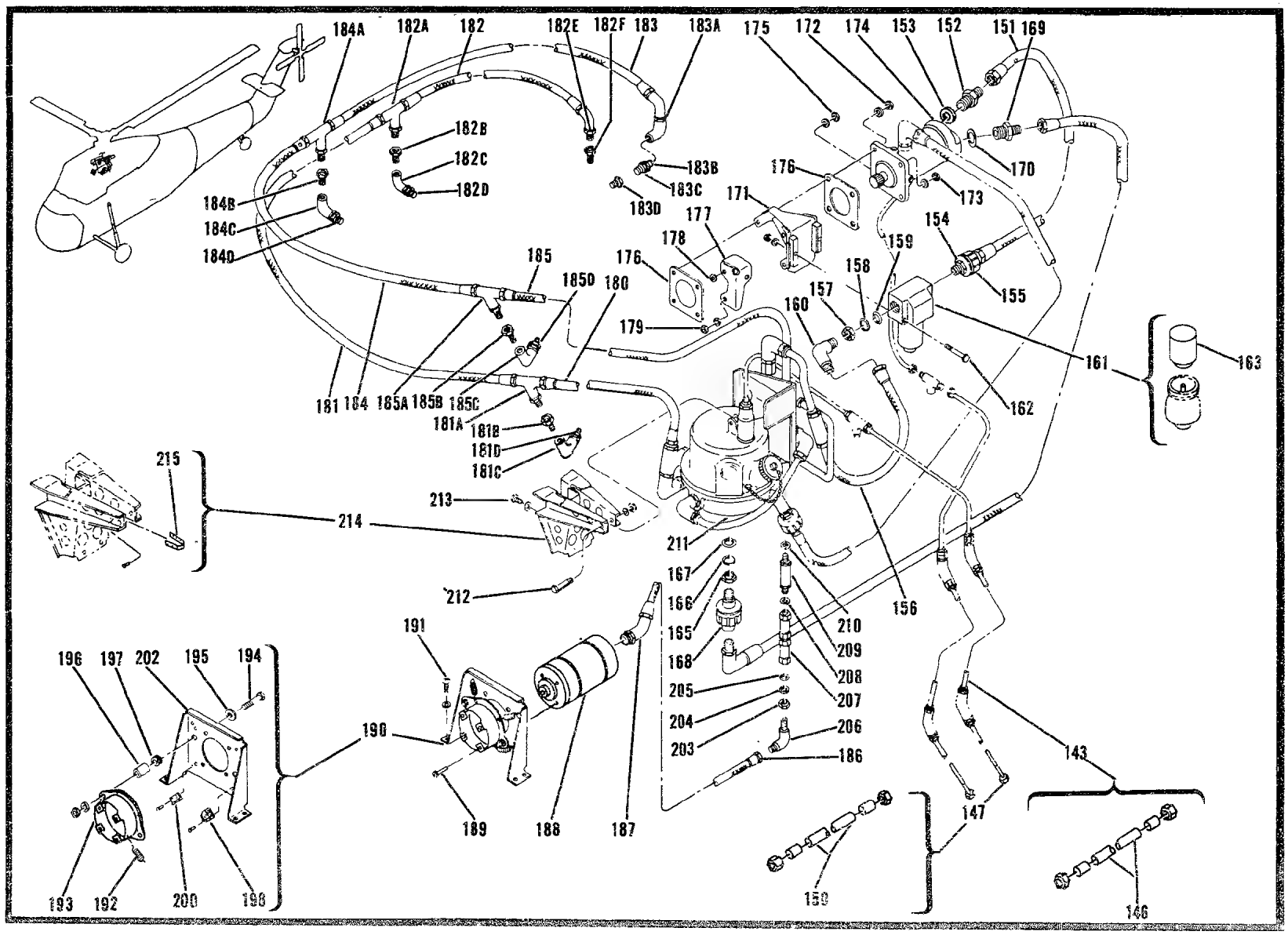

Figure 32. Main Rotor Servo Hydraulic System Installation (Sheet 4 of 4)

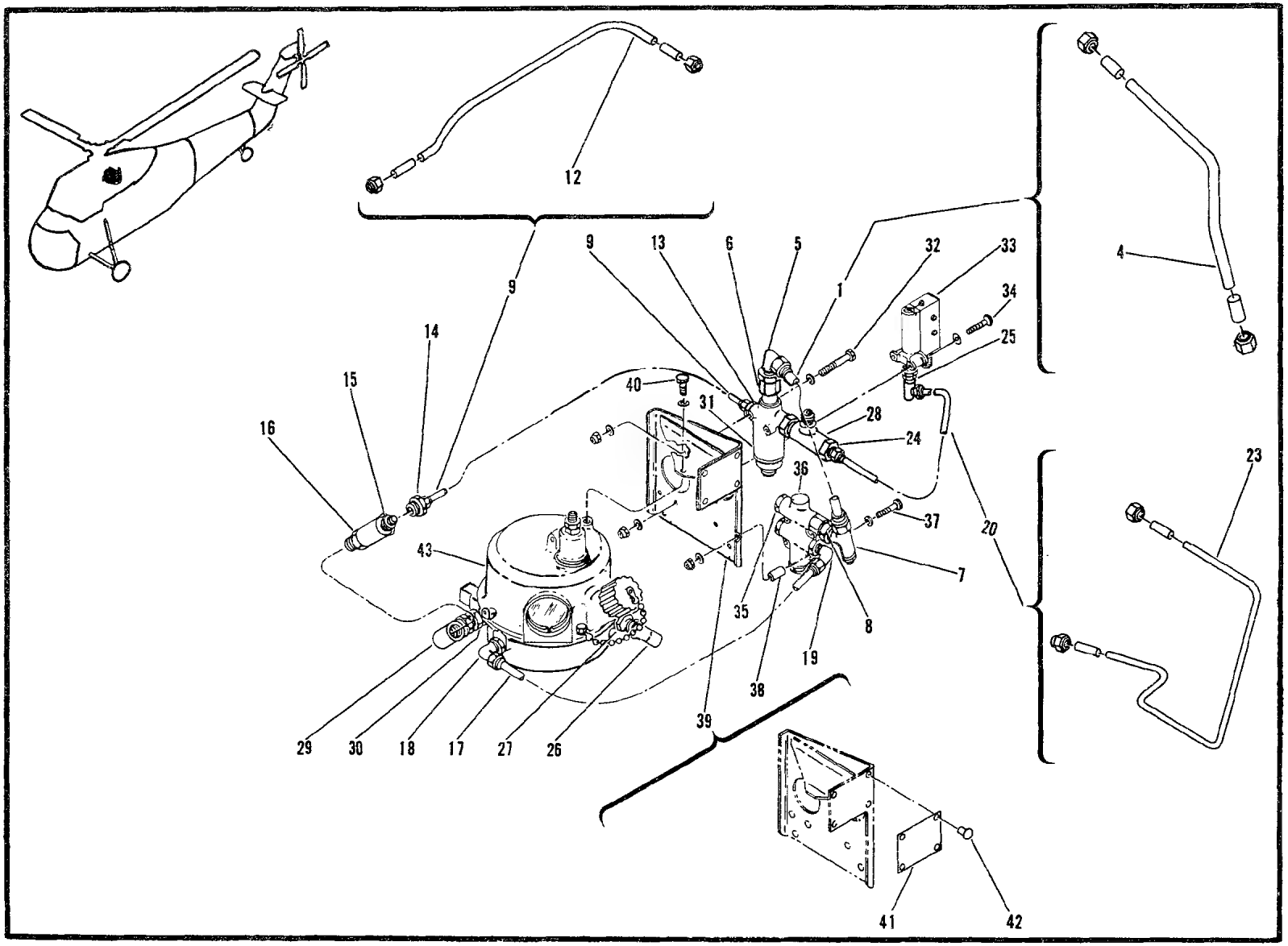

Figure 33. Panel Assembly, Main Rotor Hydraulic System

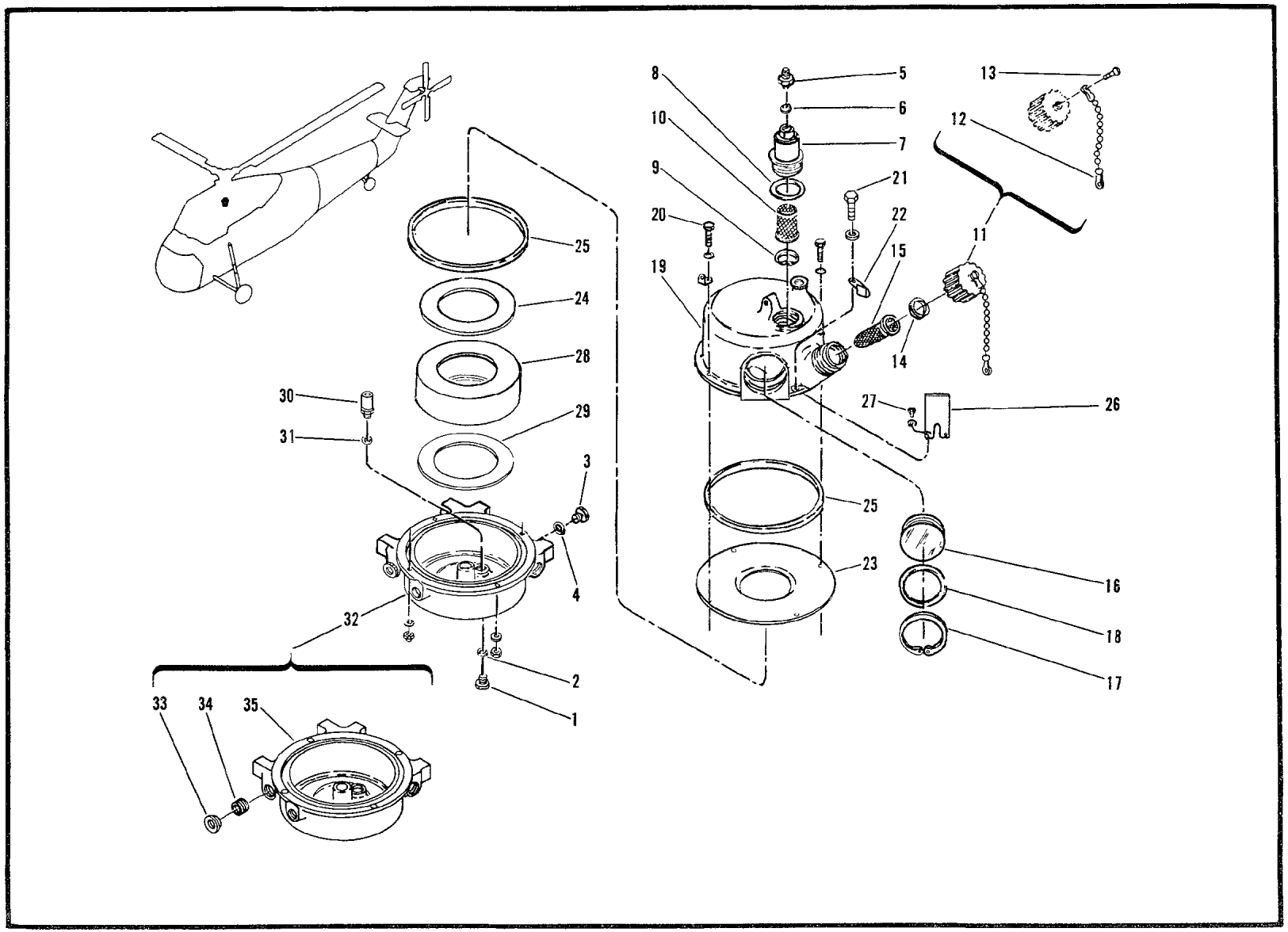

Figure 34. Reservoir Assembly, Hydraulic System Servo

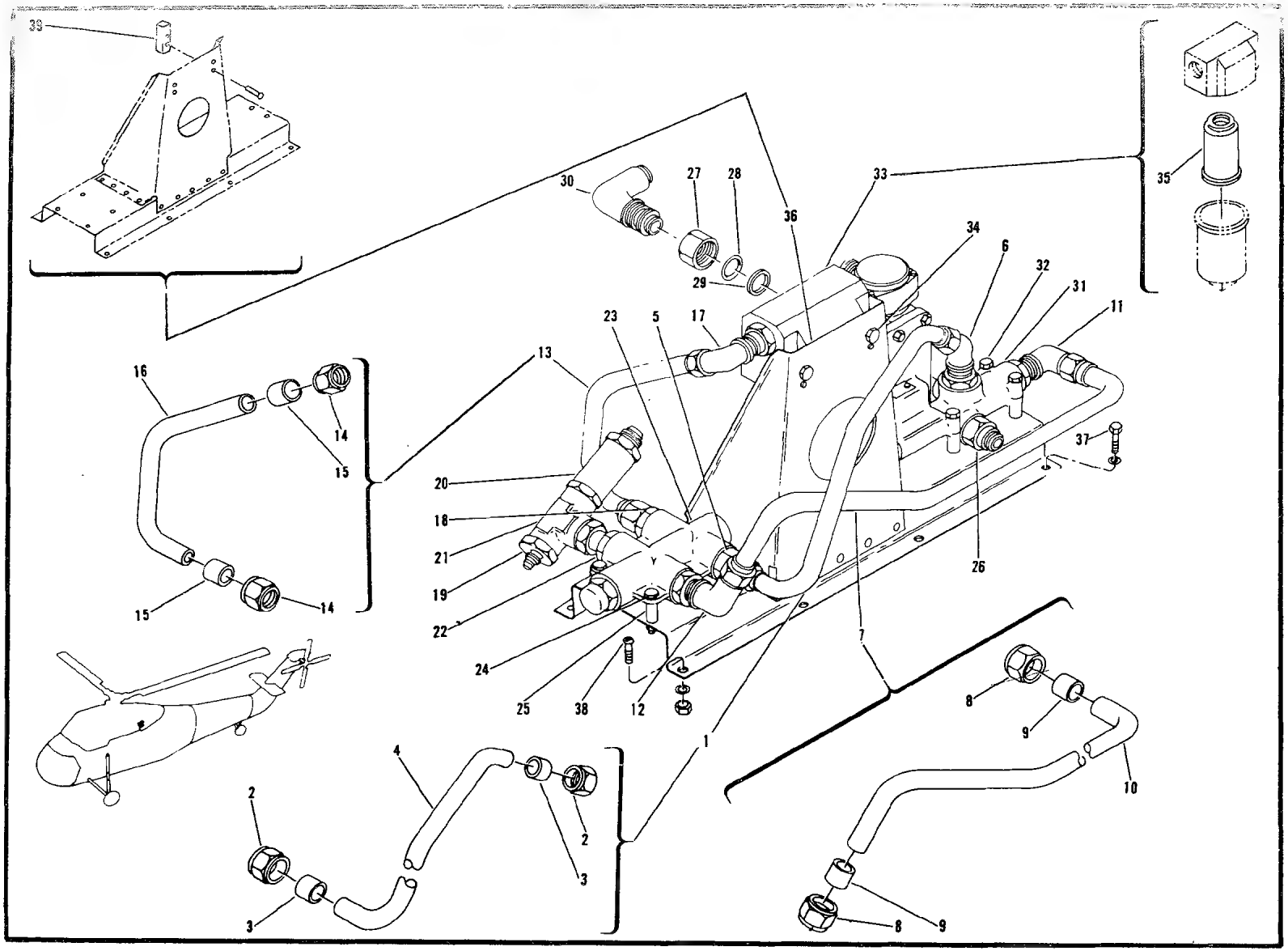

Figure 35. Panel Assembly-Rescue Hoist Hydraulic

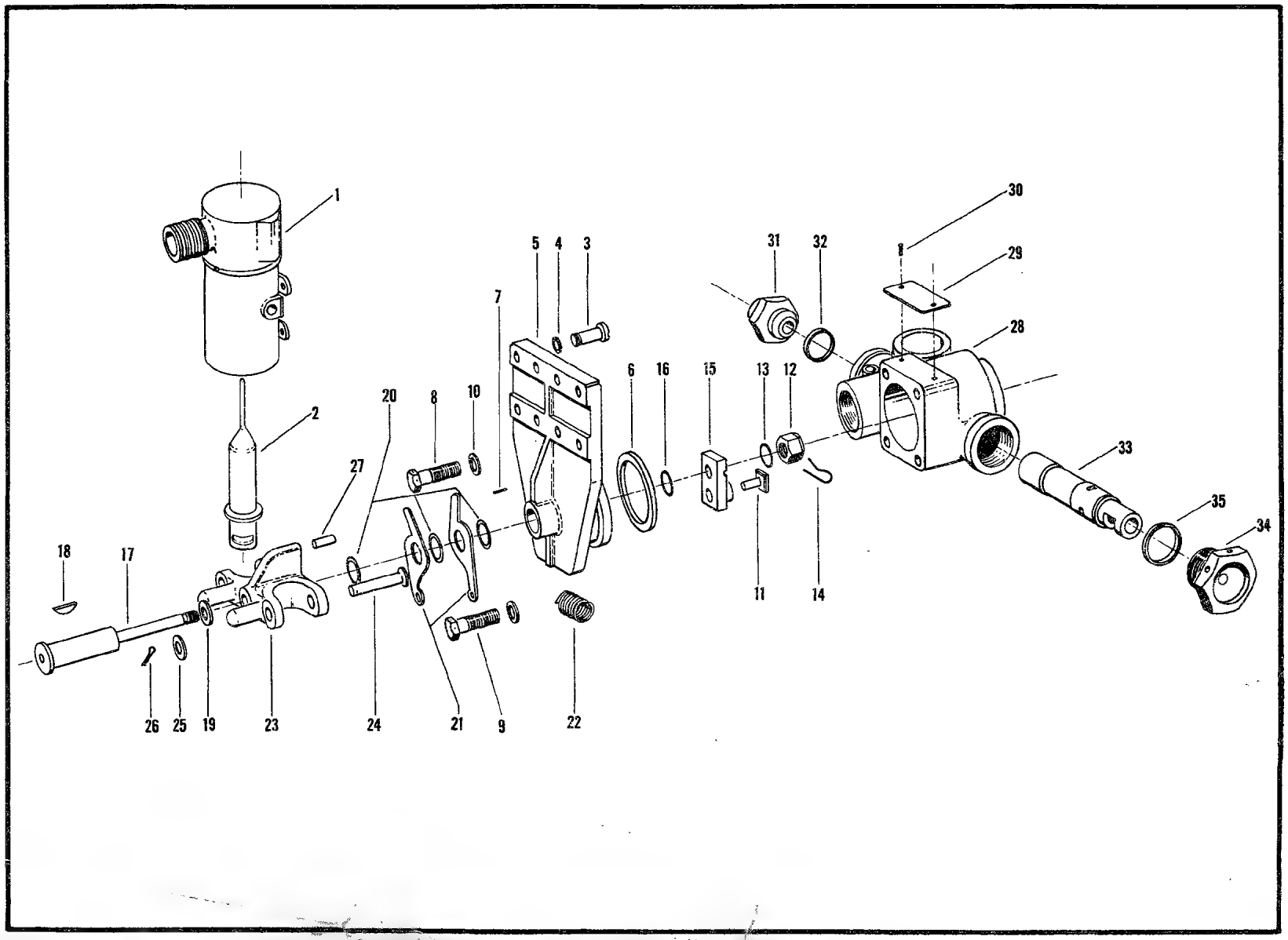

Figure 35A. Valve, Solenoid

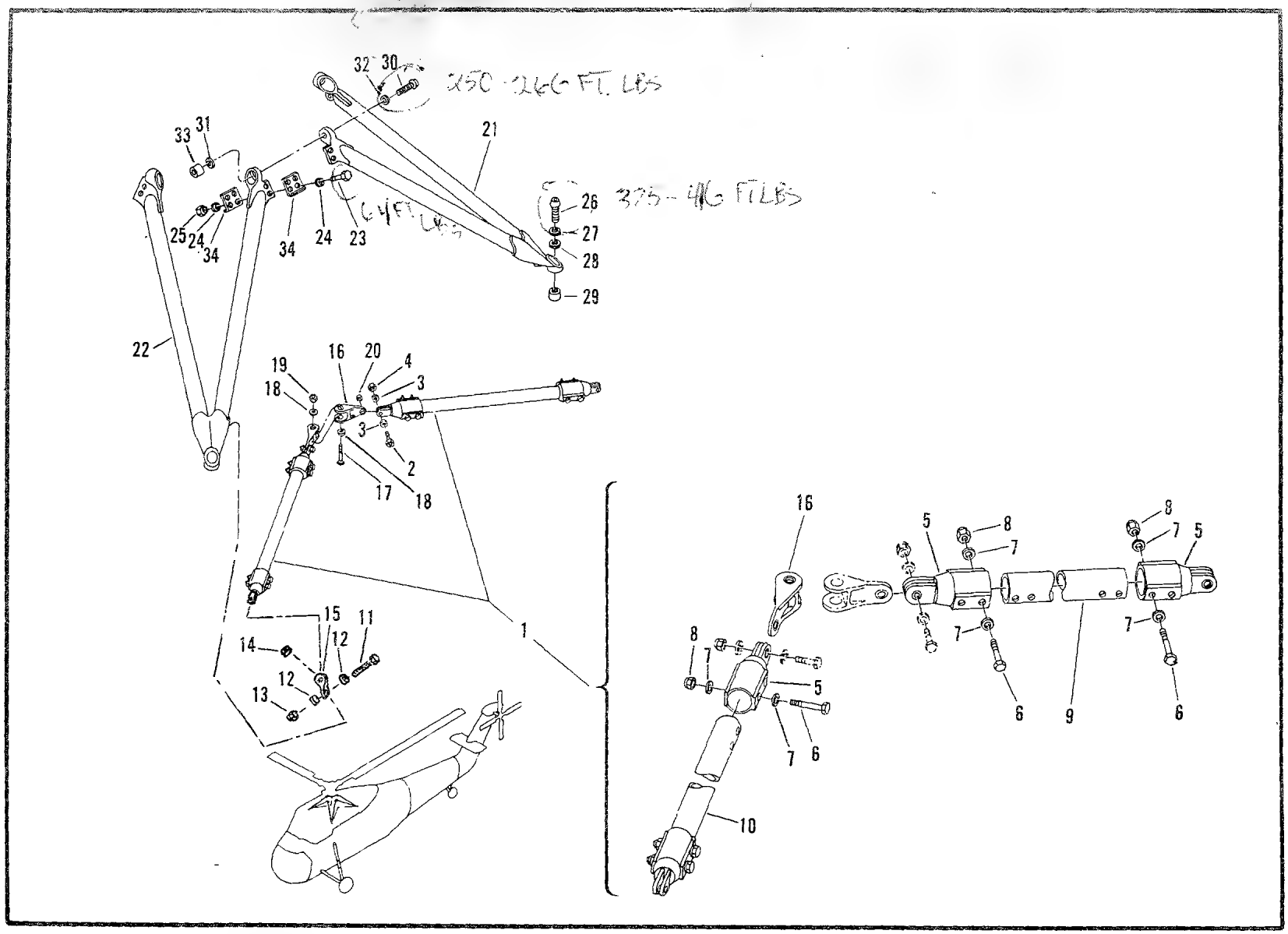

Figure 36. Main Rotor Transmission Support Installation

SECTION II

FUNCTIONAL GROUP 02

MAIN ROTOR BLADE

(1) SOURCE, MAINT AND REC CODE (a) SOURCE CODE	(b) MAINT LEVEL	(c) REC CODE	(2) FEDERAL STOCK NUMBER	REFERENCE NUMBER		(3) DESCRIPTION	MODELS USABLE ON CH-34C	(4) UNIT OF EQUIP MEAS	(5) QTY INC IN UNIT PACK	(6) QTY INC IN UNIT	(7) 30-DAY DS/GS MAINT ALW (a) 1-20	(b) 21-50	(c) 51-100	(8) 1-YR ALW PER 100 EQUIP CNTGCY	(9) DEPOT MAINT ALW PER 100 EQUIP	(10) ILLUSTRATION (a) FIG NO	(b) ITEM NO
		T	1615-511-9517	S1615-20100	<78286>	BLADE ASSEMBLY,MAIN ROTOR.... RPL-BY 1560-511-9522										37	
		T	1560-091-3885	S1615-20000	<78286>	BLADE ASSEMBLY,AMIN ROTOR.... RPL-BY 1560-511-9522										37	
			1560-694-4758	S1615-20000-1	<78286>	BLADE ASSEMBLY,MAIN ROTOR.... RPL-BY 1560-511-9522										37	
P	O	T	1560-511-9522	S1615-20100-1	<78286>	BLADE ASSEMBLY,MAIN ROTOR.... RPLS--1560-091-3885, 1560-694-4758,& 1615-511-9517 U/W 1615-611-3886 ROTOR HEAD ASSEMBLY		EA		4	5	12	25	298	*	37	
P	O		1615-301-3545	S1615-20025	<78286>	.TIP,CAP,MAIN ROTOR BLADE.... ATTACHING PARTS		EA		1	2	4	9		*	37	1
			5305-063-3503	MS24693S50	<96906>	.SCREW,MACHINE.....		HD		10	*	*	*		*	37	2
			5305-957-7814	MS24693S48	<96906>	.SCREW,MACHINE.....		HD		8	*	*	*		*	37	3
						---*---											
P	D		1615-574-8026	S1615-20009	<78286>	.BLOCK,MAIN ROTOR BLADE.....		EA		4					*	37	
X1				S1615-20101	<78286>	.SPAR AND POCKET ASSEMBLY....		EA		1						37	
P	D		1615-014-2032	S1615-20036	<78286>	..BUMPER,RUBBER.....		EA		1					*	37	4
P	D		1615-633-6122	S1615-20007	<78286>	..PLATE,END..... ATTACHING PARTS		EA		1					*	37	5
			5306-812-1831	MS20074-03-05	<96906>	..BOLT,MACHINE.....		EA		2					*	37	6
			5310-167-0753	AN960PD10L	<88044>	..WASHER,FLAT.....		HD		2					*	37	
						---*---											
P	F		1615-565-5599	S1615-20014	<78286>	..CAP,ROOT,MAIN ROTOR BLADE.. ATTACHING PARTS		EA		1	*	*	*		*	37	7
			5320-582-3305	MS20461-4-3	<96906>	..RIVET,BLIND.....		EA		10	*	*	*		*	37	8
						---*---											
P	D		1615-574-8024	S10-10-2039-4	<78286>	..SEAL,MAIN ROTOR BLADE.....		EA		1					*	37	9
			1615-847-7494	S1615-20136-3	<78286>	..POCKET,MAIN ROTOR BLADE.... RPL-BY 1615-591-6799										37	
P	D		1615-591-6799	S1615-20039	<78286>	..ROOT POCKET ASSEMBLY..... RPLS-- 1615-847-7494		EA		1					*	37	10
P	D		1615-574-8023	S10-10-2039-1	<78286>	..SEAL,MAIN ROTOR BLADE.....		EA		1					*	37	11
P	D		1615-340-0169	S1615-20037	<78286>	..POCKET ASSEMBLY.....		EA								37	12
			1615-847-7491	S1615-20136-2	<78286>	..POCKET,MAIN PLATE BLADE....		EA		4						37	
P	D		1560-591-6800	S1615-20041	<78286>	..ROOT POCKET ASSEMBLY.....		EA		4					*	37	
P	D		1615-574-8023	S10-10-2039-1	<78286>	..SEAL,MAIN ROTOR BLADE.....		EA		1					REF	37	13
			1560-758-9955	S1615-20136-1	<78286>	..POCKET ASSEMBLY RPL-BY.... 1615-565-5596										37	
			1560-847-7492	S1615-20135-1	<78286>	..POCKET ASSEMBLY RPL-BY.... 1615-565-5596										37	
P	D		1615-565-5596	S1615-20003	<78286>	..POCKET ASSEMBLY RPLS--.... 1560-758-9955 & 1560-847-7492		EA		1					30	37	14
P	D		1615-574-8023	S10-10-2039-1	<78286>	..SEAL,MAIN ROTOR BLADE.....		EA		20					REF	37	15
			1560-847-7493	S1615-20134-1	<78286>	..POCKET,MAIN ROTOR BLADE.... RPL-BY 1615-565-5597										37	
P	D		1615-565-5597	S1615-20004	<78286>	..TIP,POCKET,MAIN ROTOR..... RPLS-- 1560-847-7493		EA		4					*	37	16
P	D		5310-281-9190	AN362C832	<88044>	..NUT,SELF-LOCKING,PLATE.....		EA		8					*	37	17

(1) SOURCE, MAINT AND REC CODE (a) SOURCE CODE	(b) MAINT LEVEL	(c) REC CODE	(2) FEDERAL STOCK NUMBER	REFERENCE NUMBER	(3) DESCRIPTION	MODELS USABLE ON CH-34C	(4) UNIT OF ISSUE	(5) QTY INC IN UNIT PACK	(6) QTY INC IN UNIT	(7) 30-DAY DS/GS MAINT ALW (a) 1-20	(b) 21-50	(c) 51-100	(8) 1-YR ALW PER 100 EQUIP CNTGCY	(9) DEPOT MAINT ALW PER 100 EQUIP	(10) ILLUSTRATION (a) FIG NO	(b) ITEM NO
					CONTINUED										37	17
					ATTACHING PARTS											
			5320-117-6939	MS20426AD3-5 <96906>	..RIVET,SOLID.....		LB		16					*	37	18
					---*---											
			5306-180-2753	AN5H14 <88044>	..BOLT,MACHINE.....		HD		1					*	37	19
			5310-184-8980	AN960PD516L <88044>	..WASHER,FLAT.....		HD		1					*	37	
MF	F			S1615-20024 <78286>	..BOLT,MACHINE.....		EA		1						37	20
					MAKEFR											
					AR 5306-180-2723 BOLT											
P	D		5306-559-7994	S1615-20024-2 <78286>	..BOLT,MACHINE.....		EA		1					*	37	
			5306-151-0722	MS20073-04-24 <96906>	..BOLT,MACHINE.....		EA		2					*	37	24
			5310-141-1795	AN960-416 <88044>	..WASHER,FLAT.....		HD		AR					*	37	
			5310-141-1795	AN960-416 <88044>	..WASHER,FLAT.....		HD		2					*	37	25
			5310-877-5796	MS21044N4 <96906>	..NUT,SELF-LOCKING,HEXAGON...		EA		2					*	37	
X2	D		5307-558-3359	S1615-20023-1 <78286>	..STUD.....		EA		1					*	37	
			1560-574-8025	S1615-20008 <78286>	..PLATE,MAIN ROTOR BLADE.....		EA								37	
					RPL-BY 1560-320-9165											
P	D		1560-320-9165	S1615-20008-1 <78286>	..PLATE,MAIN ROTOR BLADE.....		EA		4					*	37	27
					RPLS-- 1560-574-8025											
P	D		1615-789-7819	S1615-20021 <78286>	..SPACER,PLATE.....		EA		AR					*	37	29
X2	D		1615-698-5430	S1615-20022 <78286>	..SPACER,PLATE.....		EA		AR					*	37	30
X1				S1615-20016-2 <78286>	..ANGLE ASSEMBLY.....		EA		1						37	
			5306-292-8252	AN4H7A <88044>	..BOLT,MACHINE.....		HD		2					*	37	32
			5310-187-2354	AN960PD416 <88044>	..WASHER,FLAT.....		HD		4					*	37	
			5310-184-9001	AN960PD416L <88044>	..WASHER,FLAT.....		HD		4					*	37	
					---*---											
P	D		1615-613-1298	S1615-20128-1 <78286>	...CUFF ASSEMBLY.....		EA		1					50	37	33
					ATTACHING PARTS											
P	D		5306-631-3872	S1615-20002-1 <78286>	...BOLT,MACHINE.....		EA		2					*	37	34
P	D		5306-638-1466	S1615-20038-1 <78286>	...BOLT,MACHINE.....		EA		2					*	37	
P	D		5306-531-8553	S1615-20038-2 <78286>	...BOLT,MACHINE.....		EA		2					*	37	
P	D		5306-576-6321	S1615-20038-3 <78286>	...BOLT,MACHINE.....		EA		2					*	37	
P	D		5306-515-8332	S1615-20038-4 <78286>	...BOLT,MACHINE.....		EA		2					*	37	
P	D		5306-550-2586	S1615-20038-5 <78286>	...BOLT,MACHINE.....		EA		2					*	37	
			5310-167-0820	AN960-516 <88044>	...WASHER,FLAT.....		HD		4					*	37	
			5310-167-0836	AN960-516L <88044>	...WASHER,FLAT.....		HD		4					*	37	
			5310-088-0553	MS21044N5 <96906>	...NUT,SELF-LOCKING,HEXAGON..		HD		2					*	37	
P	D		5306-579-0256	S1615-20002-2 <78286>	...BOLT,MACHINE.....		EA		2					*	37	35
P	D		5306-514-8077	S1615-20038-6 <78286>	...BOLT,MACHINE.....		EA		2					*	37	
P	D		5306-515-8339	S1615-20038-7 <78286>	...BOLT,MACHINE.....		EA		2					*	37	
P	D		5306-591-8322	S1615-20038-8 <78286>	...BOLT,MACHINE.....		EA		2					*	37	
P	D		5306-515-8344	S1615-20038-9 <78286>	...BOLT,MACHINE.....		EA		2					*	37	
P	D		5306-531-8554	S1615-20038-10 <78286>	...BOLT,MACHINE.....		EA		2					*	37	
			5310-167-0820	AN960-516 <88044>	...WASHER,FLAT.....		HD		4					*	37	
			5310-167-0836	AN960-516L <88044>	...WASHER,FLAT.....		HD		4					*	37	
			5310-088-0553	MS21044N5 <96906>	...NUT,SELF-LOCKING,HEXAGON..		HD		2					*	37	
P	D		5306-614-5128	S1615-20002-3 <78286>	...BOLT,MACHINE.....		EA		2					*	37	36
P	D		5306-614-5129	S1615-20038-11 <78286>	...BOLT,MACHINE.....		EA		2					*	37	
P	D		5306-515-8341	S1615-20038-12 <78286>	...BOLT,MACHINE.....		EA		2					*	37	
P	D		5306-515-8340	S1615-20038-13 <78286>	...BOLT,MACHINE.....		EA		2					*	37	
P	D		5306-559-1080	S1615-20038-14 <78286>	...BOLT,MACHINE.....		EA		2					*	37	
P	D		5306-551-1793	S1615-20038-15 <78286>	...BOLT,MACHINE.....		EA		2					*	37	

(1) SOURCE, MAINT AND REC CODE (a) SOURCE CODE	(b) MAINT LEVEL	(c) REC CODE	(2) FEDERAL STOCK NUMBER	(3) DESCRIPTION REFERENCE NUMBER			MODELS USABLE ON CH-34C	(4) UNIT OF ISSUE	(5) QTY INC IN UNIT PACK	(6) QTY INC IN UNIT	(7) 30-DAY DS/GS MAINT ALW (a) 1-20	(b) 21-50	(c) 51-100	(8) 1-YR ALW PER 100 EQUIP CNTGCY	(9) DEPOT MAINT ALW PER 100 EQUIP	(10) ILLUSTRATION (a) FIG NO	(b) ITEM NO
			5310-167-0820	AN960-516	<88044>	...WASHER,FLAT.....		HD		4					*	37	
			5310-167-0836	AN960-516L	<88044>	...WASHER,FLAT.....		HD		4					*	37	
			5310-088-0553	MS21044N5	<96906>	...NUT,SELF-LOCKING,HEXAGON..		HD		2					*	37	
P	D		5306-558-8910	S1615-20002-5	<78286>	...BOLT,MACHINE.....		EA		4					*	37	37
P	D		5306-576-6318	S1615-20038-16	<78286>	...BOLT,MACHINE.....		EA		4					*	37	
P	D		5306-550-2685	S1615-20038-17	<78286>	...BOLT,MACHINE.....		EA		4					*	37	
P	D		5306-576-6317	S1615-20038-18	<78286>	...BOLT,MACHINE.....		EA		4					*	37	
P	D		5306-576-6316	S1615-20038-19	<78286>	...BOLT,MACHINE.....		EA		4					*	37	
P	D		5306-515-8333	S1615-20038-20	<78286>	...BOLT,MACHINE.....		EA		4					*	37	
			5310-167-0820	AN960-516	<88044>	...WASHER,FLAT.....		HD		8					*	37	
			5310-167-0836	AN960-516L	<88044>	...WASHER,FLAT.....		HD		8					*	37	
			5310-088-0553	MS21044N5	<96906>	...NUT,SELF-LOCKING,HEXAGON..		HD		4					*	37	
P	D		5306-558-8910	S1615-20002-5	<78286>	...BOLT,MACHINE.....		EA		4					REF	37	38
P	D		5306-576-6318	S1615-20038-16	<78286>	...BOLT,MACHINE.....		EA		4					REF	37	
P	D		5306-550-2685	S1615-20038-17	<78286>	...BOLT,MACHINE.....		EA		4					*	37	
P	D		5306-576-6317	S1615-20038-18	<78286>	...BOLT,MACHINE.....		EA		4					REF	37	
P	D		5306-576-6316	S1615-20038-19	<78286>	...BOLT,MACHINE.....		EA		4					REF	37	
P	D		5306-515-8333	S1615-20038-20	<78286>	...BOLT,MACHINE.....		EA		4					REF	37	
			5310-167-0820	AN960-516	<88044>	...WASHER,FLAT.....		HD		8					*	37	
			5310-167-0836	AN960-516L	<88044>	...WASHER,FLAT.....		HD		8					*	37	
			5310-088-0553	MS21044N5	<96906>	...NUT,SELF-LOCKING,HEXAGON..		HD		4					*	37	
						---*---											
P	D		1615-565-5600	S1615-20029	<78286>	...PLATE,MAIN ROTOR BLADE....		EA		2					*	37	39
P	D		1615-565-5601	S1615-20029-1	<78286>	...PLATE,MAIN ROTOR BLADE....		EA		AR					*	37	
P	D		1615-565-5602	S1615-20029-2	<78286>	...PLATE,MAIN ROTOR BLADE....		EA		AR					*	37	
P	D		1615-346-1166	S1615-20030-1	<78286>	...PLATE,MAIN ROTOR BLADE....		EA		1					*	37	
X1				S14-10-2126-1	<78286>	...SPACER,MAIN ROTOR BLADE...		EA		1						37	40
X1				S14-10-2126-2	<78286>	...SPACER,MAIN ROTOR BLADE...		EA		1						37	41
X1				S1615-20006	<78286>	...SPACER,MAIN ROTOR BLADE...		EA		1						37	42
P	D		5306-863-1235	S1615-20102-1	<78286>	...BOLT,MACHINE.....		EA		4					*	37	

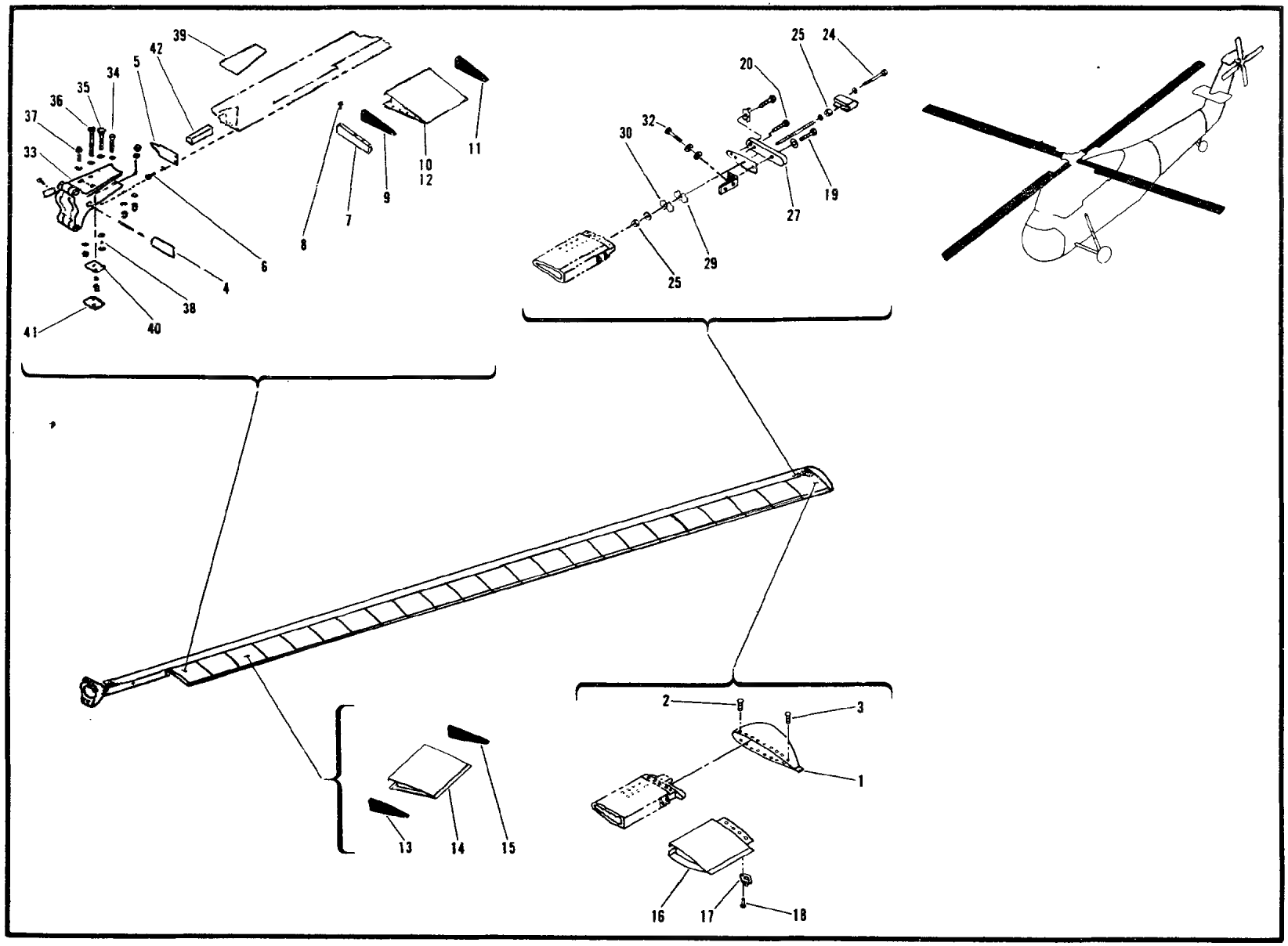

Figure 37. Blade Assembly, Main Rotor

SECTION II

FUNCTIONAL GROUP 03

TAIL ROTOR

(1) SOURCE, MAINT AND REC CODE (a) SOURCE CODE	(b) MAINT LEVEL	(c) REC CODE	(2) FEDERAL STOCK NUMBER	REFERENCE NUMBER		(3) DESCRIPTION	MODELS USABLE ON CH-34C	(4) UNIT OF ISSUE	(5) QTY INC IN UNIT PACK	(6) QTY INC IN UNIT	(7) 30-DAY DS GS MAINT ALW (a) 1-20	(b) 21-50	(c) 51-100	(8) 1-YR ALW PER 100 EQUIP CNTGCY	(9) DEPOT MAINT ALW PER 100 EQUIP	(10) ILLUSTRATION (a) FIG NO	(b) ITEM NO
				S1610-30100-17	<78286>	TAIL ROTOR INSTALLATION.....				1						38	
				S1610-34000	<78286>	.CONTROL INSTALLATION-TAIL... ROTOR PITCH				1						38	
			1615-977-9286	S1610-34003-10	<78286>	..LINK ASSEMBLY,TAIL ROTOR... RPL-BY PN S1610-34003										38	
AF	F			S1610-34003	<78286>	..LINK ASSEMBLY,TAIL ROTOR... ATTACHING PARTS		EA		2						38	1
			5306-151-0329	AN174H23	<88044>	..BOLT,MACHINE.....		EA		1	*	*	*		*	38	2
			5310-187-2354	AN960PD416	<88044>	..WASHER,FLAT.....		HD		5	*	*	*		*	38	
			5310-184-9001	AN960PD416L	<88044>	..WASHER,FLAT.....		HD		1	*	*	*		*	38	
			5310-167-1285	AN310-4	<88044>	..NUT,CASTELLATED,HEXAGON....		HD		1	*	*	*		*	38	
			5315-234-1856	MS24665-155	<96906>	..PIN,COTTER.....		HD		1	*	*	*		*	38	
P	F		1560-531-9095	S1610-34005	<78286>	..SHIM,TAIL ROTOR.....		EA		AR	3	7	14		*	38	3
			5306-174-4114	AN174H14	<88044>	..BOLT,MACHINE.....		EA		1	*	*	*		*	38	4
			5310-187-2354	AN960PD416	<88044>	..WASHER,FLAT.....		HD		2	*	*	*		*	38	
			5310-184-9001	AN960PD416L	<88044>	..WASHER,FLAT.....		HD		2	*	*	*		*	38	
			5310-167-1285	AN310-4	<88044>	..NUT,CASTELLATED,HEXAGON....		HD		1	*	*	*		*	38	
			5315-234-1856	MS24665-155	<96906>	..PIN,COTTER.....		HD		1	*	*	*		*	38	
P	F		1560-531-9095	S1610-34005	<78286>	..SHIM,TAIL ROTOR..... ---*---		EA		AR	REF	REF	REF		REF	38	5
			5310-167-1300	AN316-6R	<88044>	...NUT,PLAIN,HEXAGON.....		HD		1	*	*	*		*	38	6
P	F		1560-574-6397	S1610-34003-3	<78286>	...BEARING,BALL,ROD END.....		EA		1	14	36	72		*	38	7
			5310-753-4394	AN316-6L	<88044>	...NUT,PLAIN,HEXAGON.....		EA		1	*	*	*		*	38	8
P	F		1560-574-6396	S1610-34003-2	<78286>	...BEARING,BALL,ROD END.....		EA		1	10	25	49		*	38	9
P	F		1560-564-5724	S1610-34003-1	<78286>	...LINK,TAIL ROTOR PITCH..... CONTROL		EA		1	7	16	33		*	38	10
AF	F			S1610-34200	<78286>	.COUNTERWEIGHT ASSEMBLY..... TAIL ROTOR		EA		1						38	11
AF	F			S1610-34003	<78286>	..LINK ASSEMBLY,TAIL ROTOR... ATTACHING PARTS		EA		2						38	12
			5306-180-3349	AN4H14	<88044>	..BOLT,MACHINE.....		EA		1	*	*	*		*	38	13
			5310-141-1795	AN960-416	<88044>	..WASHER,FLAT.....		HD		4	*	*	*		*	38	
			5310-167-1285	AN310-4	<88044>	..NUT,CASTELLATED,HEXAGON....		HD		1	*	*	*		*	38	
			5315-234-1856	MS24665-155	<96906>	..PIN,COTTER..... ---*---		HD		1	*	*	*		*	38	
			5310-167-1300	AN316-6R	<88044>	...NUT,PLAIN,HEXAGON.....		HD		1	*	*	*		*	38	14
P	F		1560-574-6397	S1610-34003-3	<78286>	...BEARING,BALL,ROD END.....		EA		1	REF	REF	REF		REF	38	15
			5310-753-4394	AN316-6L	<88044>	...NUT,PLAIN,HEXAGON.....		EA		1	*	*	*		*	38	16
P	F		1560-574-6396	S1610-34003-2	<78286>	...BEARING,BALL,ROD END..... RPLS-- 1560-574-6397		EA		1	REF	REF	REF		REF	38	17
P	F		1560-564-5724	S1610-34003-1	<78286>	...LINK,TAIL ROTOR PITCH..... CONTROL		EA		1	REF	REF	REF		REF	38	18
P	F		1560-566-2399	S1610-34200-1	<78286>	..WEIGHT,TAIL ROTOR..... ATTACHING PARTS		EA		16	3	7	14		*	38	19
			5306-180-2752	AN5H13	<88044>	..BOLT,MACHINE.....		HD		1	*	*	*		*	38	20
			5310-167-0820	AN960-516	<88044>	..WASHER,FLAT.....		HD		2	*	*	*		*	38	
			5310-088-0553	MS21044N5	<96906>	..NUT,SELF-LOCKING,HEXAGON... ---*---		HD		1	*	*	*		*	38	
			4730-172-0010	MS15002-1	<96906>	..FITTING,LUBRICATION.....		EA		4	*	*	*		*	38	21
P	F		1560-506-0516	S1610-34106	<78286>	..NUT,COUNTERWEIGHT,TAIL..... ROTOR		EA		4	2	4	8		*	38	22
			1560-506-0516	YMP226SL	<24892>	ADDED PART NO.FOR ABOVE ITEM.		EA			REF	REF	REF			38	22

(1) SOURCE, MAINT AND REC CODE (a) SOURCE CODE	(b) MAINT LEVEL	(c) REC CODE	(2) FEDERAL STOCK NUMBER	REFERENCE NUMBER		(3) DESCRIPTION	MODELS USABLE ON CH-34C	(4) UNIT OF ISSUE	(5) QTY INC IN UNIT PACK	(6) QTY INC IN UNIT	(7) 30-DAY DS/GS MAINT ALW (a) 1-20	(b) 21-50	(c) 51-100	(8) 1-YR ALW PER 100 EQUIP CNTCCY	(9) DEPOT MAINT ALW PER 100 EQUIP	(10) ILLUSTRATION (a) FIG NO	(b) ITEM NO
P	F		5306-550-2595	S1610-34203	<78286>	..BOLT,MACHINE.....		EA		4	*	*	*		*	38	23
			5310-167-0823	AN960-816	<88044>	..WASHER,FLAT.....		HD		8	*	*	*		*	38	24
			5310-167-1289	AN310-8	<88044>	..NUT,CASTELLATED,HEXAGON....		EA		4	*	*	*		*	38	25
P	F		1615-628-5396	S1610-34107	<78286>	..SPACER,SLEEVE.....		EA		4	2	5	9		*	38	26
				S1610-34109	<78286>	..SUPPORT BEAM.....		EA		1						38	
				S1610-34108	<78286>	..SUPPORT BEAM.....		EA		1						38	
			5315-234-1864	MS24665-302	<96906>	..PIN,COTTER.....		HD		4	*	*	*		*	38	27
P	F		3110-529-9453	DW8E5729	<21335>	..BEARING,TAIL ROTOR.....		EA		4	*	*	*		*	38	28
P	F		1560-506-0515	S1610-34105	<78286>	..BRACKET,COUNTERWEIGHT.....		EA		4	*	2	2		*	38	29
P	F		1615-522-8895	S1610-34201	<78286>	..BEAM RPLS-- 1560-506-0514.		EA		1	*	*	2		*	38	30
AF	F			S1610-31100-19	<78286>	.TAIL ROTOR ASSEMBLY.....		EA		1						38	31
		R	1615-560-5348	S1615-30100-2	<78286>	..BLADE,TAIL ROTOR..... RPL-BY 1615-587-6371										38	
P	F	R	1615-587-6371	S1615-30100-4	<78286>	..BLADE,TAIL ROTOR RPLS--... 1615-560-5348 ATTACHING PARTS		EA		4	6	14	29		*	38	32
			5306-151-3091	AN178H23	<88044>	..BOLT,MACHINE.....		EA		2	*	*	*		*	38	33
			5310-167-0823	AN960-816	<88044>	..WASHER,FLAT.....		HD		4	*	*	*		*	38	
			5310-285-5638	MS20364-820C	<96906>	..NUT,SELF-LOCKING,HEXAGON...		HD		2	*	*	*		*	38	
P	F		1615-307-3620	S1615-30014-1	<78286>	..SHIM,ROTOR,TAIL.....		EA		AR	4	9	18		*	38	34
P	F		1560-332-3513	S1615-30014-2	<78286>	..SHIM,ROTOR,TAIL.....		EA		AR	3	7	13		*	38	35
P	F		1615-620-4117	S1615-30113-5	<78286>	..SHIM,TAIL ROTOR..... RPLS-- 1560-333-7929, 1560-336-0739 OBSLTS 1560-591-6805		EA		AR	8	19	39		*	38	36
P	F		1615-620-4502	S1615-30113-4	<78286>	..SHIM,TAIL ROTOR..... RPLS-- 1560-336-0745, 1560-589-6106,& 1560-698-5431 ---*---		EA		AR	4	10	20		*	38	37
X1				S1615-30101-1	<78286>	...BLADE,TAIL ROTOR.....		EA		1						38	38
P	F		1560-327-3855	S1615-30007	<78286>	....CAP,TAIL ROTOR BLADE TIP. ATTACHING PARTS		EA		1	2	4	8		*	38	39
			5320-582-3501	MS20601AD4W2	<96906>	....RIVET,BLIND.....		VC		8	*	*	*		*	38	40
AH	F			S1610-31100-20	<78286>	..ROTOR ASSEMBLY,TAIL.....		EA		1						38	
P	F		1615-563-9838	S1610-33112-1	<78286>	...SPINDLE ASSEMBLY,TAIL..... ROTOR RPLS-- 1615-567-5195, 1615-701-0562 USE AFT-CMPL-W TM1-1H-34A-550 ATTACHING PARTS		EA		4	4	9	19		*	38	43
P	H		5315-291-2161	S1610-31002	<78286>	...PIN,STRAIGHT,THREADED.....		EA		1	6	14	28		*	38	44
			5310-531-9515	AN960C416	<88044>	...WASHER,FLAT.....		HD		1	*	*	*		*	38	45
P	H		5310-141-3191	S1610-31003	<78286>	...WASHER,FLAT.....		EA		1	6	14	29		*	38	46
P	H		5330-599-9761	S1610-31001	<78286>	...WASHER,NONMETALLIC.....		EA		2	2	4	9		*	38	47
			5310-176-8112	AN320-8	<88044>	...NUT,SLOTTED,HEXAGON.....		LL		1	*	*	*		*	38	48
			5315-245-1254	MS24665-309	<96906>	...PIN,COTTER..... ---*---		HD		1	*	*	*		*	38	49
			4730-172-0010	MS15002-1	<96906>	....FITTING,LUBRICATION.....		EA		1	*	*	*		*	38	50
			1615-508-6870	S1610-34103	<78286>	....ARM,TAIL ROTOR SPINDLE... RPL-BY 1615-942-8170		EA		1						38	

(1) SOURCE, MAINT AND REC CODE (a) SOURCE CODE	(b) MAINT LEVEL	(c) REC CODE	(2) FEDERAL STOCK NUMBER	REFERENCE NUMBER		(3) DESCRIPTION	MODELS USABLE ON CH-34C	(4) UNIT OF ISSUE	(5) QTY INC IN UNIT PACK	(6) QTY INC IN UNIT	(7) 30-DAY DS/GS MAINT ALW (a) 1-20	(b) 21-50	(c) 51-100	(8) 1-YR ALW PER 100 EQUIP CNTGCY	(9) DEPOT MAINT ALW PER 100 EQUIP	(10) ILLUSTRATION (a) FIG NO	(b) ITEM NO
P	H		5330-684-7787	71A7056	<73680>	....SEAL,PLAIN ENCASED.....		EA		4	*	*	*		*	38	
			5306-285-5325	AN174H7A	<88044>	....BOLT MACHINE.....		HD		2	*	*	*		*	38	52
			5310-141-1795	AN960-416	<88044>	....WASHER,FLAT.....		HD		4	*	*	*		*	38	
			5310-877-5796	MS21044N4	<96906>	....NUT SELF-LOCKING,HEXAGON.		EA		2	*	*	*		*	38	
						---*---											
P	H		1615-508-6864	S1610-33107	<78286>	....SLEEVE,TAIL ROTOR SPINDLE RPLS-- 1560-339-0536		EA		1	2	2	4		*	38	53
P	H		5310-508-6866	S1610-33110	<78286>	...NUT,INNER,TAIL ROTOR..... RPLS-- 5308-208-5988		EA		1	2	4	8		3	38	54
P	F		1560-522-8894	S1610-33115	<78286>	....WASHER,LOCK.....		EA		1	8	20	40		*	38	55
P	H		1560-521-9174	S1610-33114	<78286>	....PLUG,TAIL ROTOR SPINDLE..		EA		1	2	6	11		*	38	56
P	H	U	3110-627-7823	SB1500-1	<78286>	....BEARING,BALL,STACK..... ROTOR BLADE		EA		1	7	16	33		*	38	57
			5330-702-4562	26004-7085	<73680>	....SEAL,PLAIN,ENCASED.NOTE 1		EA		4	*	*	*			38	58
P	F		5310-567-5362	S1610-33109	<78286>	....NUT,PLAIN-OUTER.....		EA		1	2	2	4		*	38	59
P	H		1615-508-6867	S1610-33111	<78286>	....STOP,TAIL ROTOR SPINDLE.. RPLS-- 1560-336-0674, 1560-994-7578		EA		1	3	9	17		*	38	60
P	H		1615-508-6868	S1610-33205	<78286>	....SPINDLE,TAIL ROTOR.....		EA		1	*	2	2		20	38	61
AH	H			S1610-33000-2	<78286>	...HUB ASSEMBLY,TAIL ROTOR... RPLS-- 1560-304-4605		EA		1						38	62
			4730-172-0010	MS15002-1	<96906>	....FITTING,LUBRICATION.....		EA		4	*	*	*		*	38	63
			5330-141-4206	26004-7056	<73680>	....SEAL,PLAIN,ENCASED.NOTE 1		EA		4	*	*	*			38	64
P	H		3110-731-4266	SB2500-3	<78286>	....BEARING ROLLER,NEEDLE....		EA		4	14	35	71		*	38	65
P	H		5310-303-2535	S1610-33002	<78286>	....WASHER,SPLIT.....		EA		4	8	19	38		*	38	66
P	H		5330-141-4206	26004-7056	<73680>	....SEAL,PLAIN ENCASED.NOTE 1		EA		4	*	*	*			38	67
P	H		3110-731-4266	SB2500-3	<78286>	....BEARING,ROLLER NEEDLE....		EA		4	REF	REF	REF		REF	38	68
P	H		3110-580-1124	SB2501-1	<78286>	....RING,BEARING,INNER.....		EA		4	10	24	48		*	38	69
P	F		1560-508-6875	S1610-33003-2	<78286>	....HUB,TAIL ROTOR.....		EA		1	2	2	4		*	38	70
P	H		1560-715-2256	S1607-1561-1	<78286>	PARTS KIT,TAIL ROTOR U/O.... PN S1610-31100-19 SEE FUNCTIONAL GROUP 50 FOR COMPONENTS		EA		1	*	2	2		*	38	
P	H		1560-733-2565	S1607-1561-2	<78286>	PARTS KIT,TAIL ROTOR..... U/O PN S1610-31100-19 SEE FUNCTIONAL GROUP 50 FOR COMPONENTS		EA		1	2	5	9		*	38	
			1560-724-3306	EAB430	<81996>	TAPE KIT SPECIAL..... RPL-BY 8030-084-0440 NOTE 1 COMPONENT OF KIT 1560-733-2565		EA		1						38	

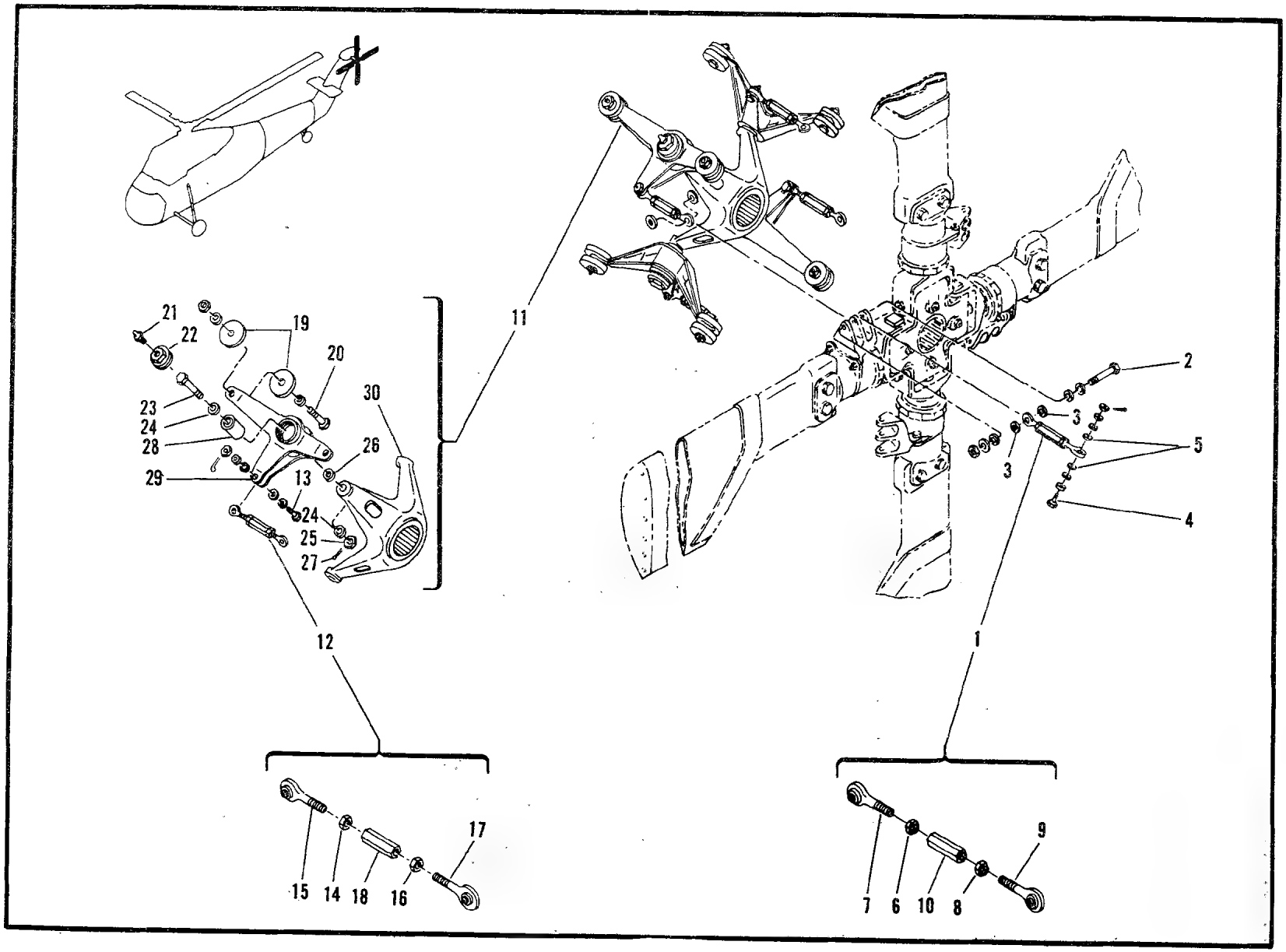

Figure 38. Tail Rotor Installation (Sheet 1 of 2)

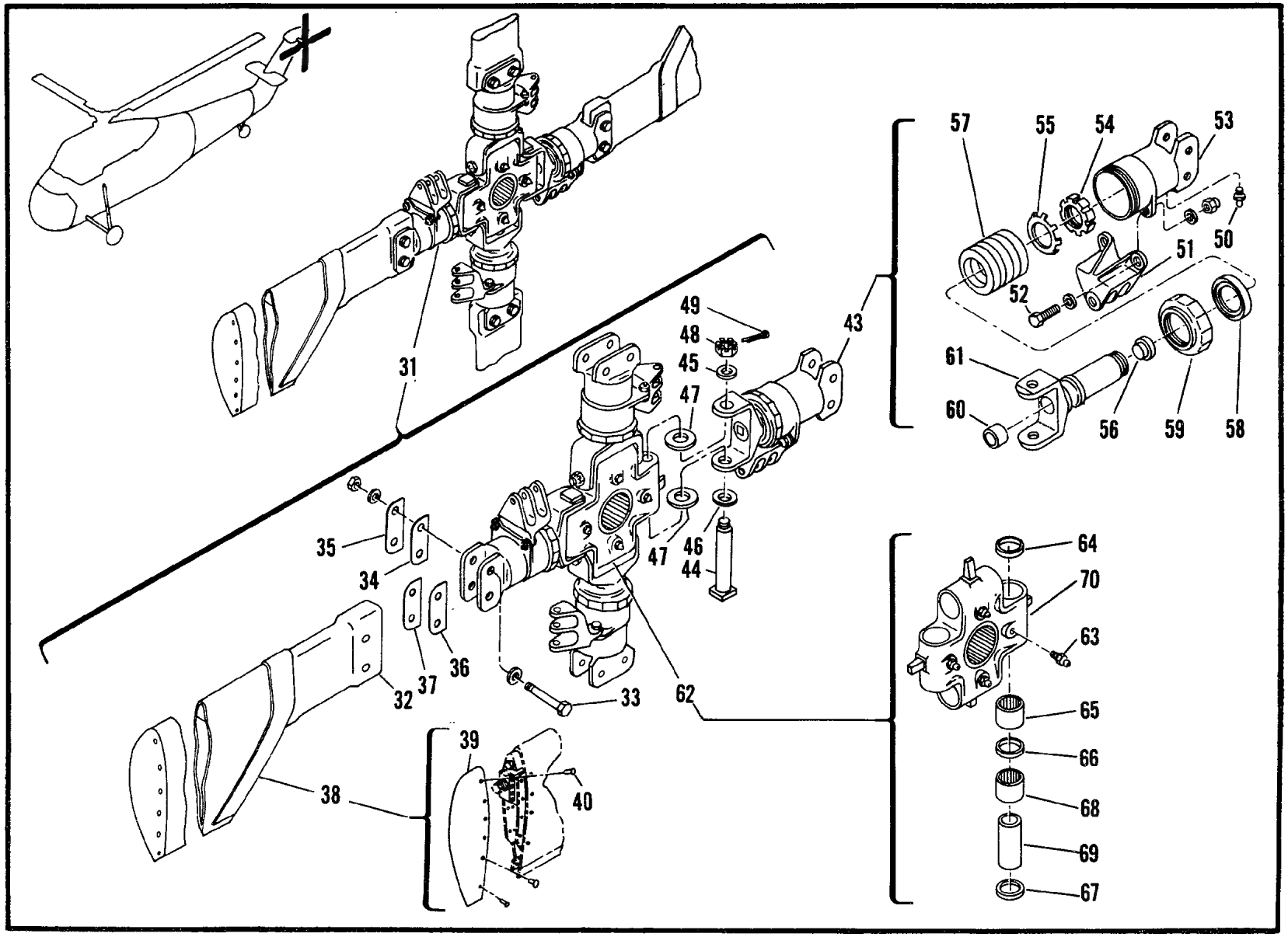

Figure 38. Tail Rotor Installation (Sheet 2 of 2)

SECTION II

FUNCTIONAL GROUP 04

FUSELAGE AND EQUIPMENT

(1) SOURCE, MAINT AND REC CODE (a) SOURCE CODE	(b) MAINT LEVEL	(c) REC CODE	(2) FEDERAL STOCK NUMBER	REFERENCE NUMBER		(3) DESCRIPTION	MODELS USABLE ON CH-34C	(4) UNIT OF ISSUE	(5) QTY INC IN UNIT PACK	(6) QTY INC IN UNIT	(7) 30-DAY DS/GS MAINT ALW (a) 1-20	(b) 21-50	(c) 51-100	(8) 1-YR ALW PER 100 EQUIP CNTGCY	(9) DEPOT MAINT ALW PER 100 EQUIP	(10) ILLUSTRATION (a) FIG NO	(b) ITEM NO
				S1620-61513	<78286>	FUSELAGE AND EQUIPMENT..... ASSEMBLY		EA		1						39	
				S1620-64000-6	<78286>	.PYLON AND EQUIPMENT SEE.... FIG.154 FOR BREAKDOWN ATTACHING PARTS		EA		1						39	1
P	F		5306-550-3568	S1620-64175-1	<78286>	.BOLT,SHOULDER.....		EA		2	8	20	39		*	39	2
			5310-167-0751	AN960PD816	<88044>	.WASHER,FLAT.....		HD		2	*	*	*		*	39	3
			5310-184-8976	AN960PD816L	<88044>	.WASHER,FLAT.....		HD		2	*	*	*		*	39	4
P	F		5310-529-8471	S1620-64175-2	<78286>	.WASHER,FLAT.....		EA		2	*	*	*		*	39	5
			5310-187-2400	AN960PD616	<88044>	.WASHER,FLAT.....		HD		2	*	*	*		*	39	6
			5310-207-9274	AN320C6	<88044>	.NUT,SLOTTED,HEXAGON.....		EA		2	*	*	*		*	39	7
			5315-234-1864	MS24665-302	<96906>	.PIN,COTTER.....		HD		2	*	*	*		*	39	8
						---*---											
				S1620-63141	<78286>	.FLAG INSTALLATION-PIN SIGNAL				1						39	
P	D		1560-663-2966	S1620-63145	<78286>	..SPRING,HELICAL,EXTENSION...		EA		1	2	2	3		*	39	9
			5315-989-7631	MS20392-2C7	<96906>	..PIN,STRAIGHT,HEADED.....		EA		1	*	*	*		*	39	10
			5310-167-0818	AN960-10	<88044>	..WASHER,FLAT.....		HD		2	*	*	*		*	39	11
P	D		1560-671-1928	S1620-63142-6	<78286>	..FLAG ASSEMBLY..... ATTACHING PARTS		EA		1	2	2	3		*	39	12
			5315-058-9756	MS16562-227	<96906>	..PIN,SPRING.....		HD		1	*	*	*		*	39	14
						---*---											
P	F		1560-575-2049	S1620-63143	<78286>	...FEELER ASSEMBLY,HINGE LOCK ATTACHING PARTS		EA		1	*	*	2		*	39	15
			5320-808-7822	MS20470AD3-8	<96906>	...RIVET.....		LB		4	*	*	*		*	39	16
						---*---											
				S1620-63132-2	<78286>	.LOCK INSTALLATION-HINGE.....				1						39	
			5305-145-6971	AN503-8-6	<88044>	..SCREW,MACHINE.....		HD		2	*	*	*		*	39	17
			5310-045-3299	MS35338-42	<96906>	..WASHER,LOCK.....				2	*	*	*		*	39	
			5315-811-1232	MS20392-2C23	<96906>	..PIN,STRAIGHT,HEADED.....		EA		2	*	*	*		*	39	18
			5310-167-0753	AN960PD10L	<88044>	..WASHER,FLAT.....		HD		4	*	*	*		*	39	
			5315-234-1856	MS24665-155	<96906>	..PIN,COTTER.....		HD		2	*	*	*		*	39	
P	F		5120-703-9682	S1620-63229-2	<78286>	..WRENCH,PYLON FOLDER.....		EA		1	2	2	4		*	39	19
P	F		1560-589-4298	S1620-63231	<78286>	..COLLAR,PYLON HINGE LOCK....		EA		2	2	2	3		*	39	20
			1560-589-4298	15505	<23108>	ADDED PART NO.FOR ABOVE ITEM.		EA			REF	REF	REF			39	20
P	F		1560-618-9274	S1620-63136	<78286>	..BUSHING,SLEEVE.....		EA		1	2	2	3		*	39	21
			5310-564-7712	S1620-63134-3	<78286>	..NUT,JACK PIN,PYLON HINGE... RPL-BY 1560-613-0949										39	
P	F		1560-613-0949	S1620-63134-5	<78286>	..JACK PIN NUT,FOLDING HINGE. RPLS-- 5310-564-7712		EA		1	2	2	3		*	39	22
P	F		1560-567-1099	S1620-63135-1	<78286>	..TUBE,FOLDING PYLON-HINGE,.. LOCK TORQUE		EA		1	*	2	2		*	39	23
			1560-323-4369	S1620-63134-2	<78286>	..NUT,JACK PIN RPL-BY..... 1560-613-3014		EA			*	*	*			39	
			1560-346-1162	S1620-63134-4	<78286>	..JACK,PIN,NUT RPL-BY..... 1560-613-3014										39	
P	F		1560-613-3014	S1620-63134-6	<78286>	..JACK,PIN,NUT RPLS--..... 1560-323-4369, 1560-346-1162		EA		1	*	2	2		*	39	24
P	F		1560-323-4366	S1620-63133-1	<78286>	..PIN ASSEMBLY,FOLDING..... PYLON HINGE LOCK		EA		1	*	2	2		*	39	25
P	F		1560-323-4367	S1620-63133-2	<78286>	..PIN ASSEMBLY,FOLDING..... PYLON HINGE LOCK		EA		1	*	2	2		*	39	26

(1) SOURCE, MAINT AND REC CODE (a) SOURCE CODE	(b) MAINT LEVEL	(c) REC CODE	(2) FEDERAL STOCK NUMBER	REFERENCE NUMBER		(3) DESCRIPTION	MODELS USABLE ON CH-34C	(4) UNIT OF ISSUE	(5) QTY INC IN UNIT PACK	(6) QTY INC IN UNIT	(7) 30-DAY DS GS MAINT ALW (a) 1-20	(b) 21-50	(c) 51-100	(8) 1-YR ALW PER 100 EQUIP CNTGCY	(9) DEPOT MAINT ALW PER 100 EQUIP	(10) ILLUSTRATION (a) FIG NO	(b) ITEM NO
P	F		1560-340-0174	S1620-63137	<78286>	..RECEPTACLE,WING FOLD..... ATTACHING PARTS		EA		2	*	2	2		*	39	27
			5305-151-0376	AN500A8-28	<88044>	..SCREW,MACHINE.....		EA		3	*	*	*		*	39	28
			5310-045-3299	M35338-42	<96906>	..WASHER,LOCK.....				3	*	*	*		*	39	
						---*---											
				S1620-63000-3	<78286>	.AFT SECTION TAIL CONE..... EQUIPMENT SEE FIG.150 FOR BREAKDOWN ATTACHING PARTS		EA		1						39	29
			5306-180-3348	AN4CH11	<88044>	.BOLT,MACHINE.....		EA		2	*	*	*		*	39	30
			5310-187-2354	AN960PD416	<88044>	.WASHER,FLAT.....		HD		2	*	*	*		*	39	
			5310-184-9001	AN960PD416L	<88044>	.WASHER,FLAT.....		HD		2	*	*	*		*	39	
			5310-982-4988	MS21045C4	<96906>	.NUT,SELF-LOCKING,HEXAGON....		HD		2	*	*	*		*	39	
			5306-180-1778	AN4CH10A	<88044>	.BOLT,MACHINE.....		EA		2	*	*	*		*	39	31
			5310-187-2354	AN960PD416	<88044>	.WASHER,FLAT.....		HD		2	*	*	*		*	39	
			5310-184-9001	AN960PD416L	<88044>	.WASHER,FLAT.....		HD		2	*	*	*		*	39	
			5310-982-4988	MS21045C4	<96906>	.NUT,SELF-LOCKING,HEXAGON....		HD		2	*	*	*		*	39	
			5306-156-2339	AN4C7A	<88044>	.BOLT,MACHINE.....		EA		36	*	*	*		*	39	32
			5310-187-2354	AN960PD416	<88044>	.WASHER,FLAT.....		HD		36	*	*	*		*	39	
			5310-184-9001	AN960PD416L	<88044>	.WASHER,FLAT.....		HD		36	*	*	*		*	39	
			5310-982-4988	MS21045C4	<96906>	.NUT,SELF-LOCKING,HEXAGON....		HD		36	*	*	*		*	39	
			5306-182-1854	AN3CH5A	<88044>	.BOLT,MACHINE.....		EA		2	*	*	*		*	39	33
			5310-183-4406	AN960PD10	<88044>	.WASHER,FLAT.....		HD		2	*	*	*		*	39	
			5310-877-5797	MS21044N3	<96906>	.NUT,SELF-LOCKING,HEXAGON....		EA		2	*	*	*		*	39	
			5306-282-4309	AN3H5	<88044>	.BOLT,MACHINE.....		HD		4	*	*	*		*	39	34
			5310-877-5797	MS21044N3	<96906>	.NUT,SELF-LOCKING,HEXAGON....		EA		4	*	*	*		*	39	
						---*---											
				S1620-61506	<78286>	.FUSELAGE AND EQUIPMENT..... FORWARD SECTION SEE FIG. 40 FOR BREAKDOWN		EA		1						39	35

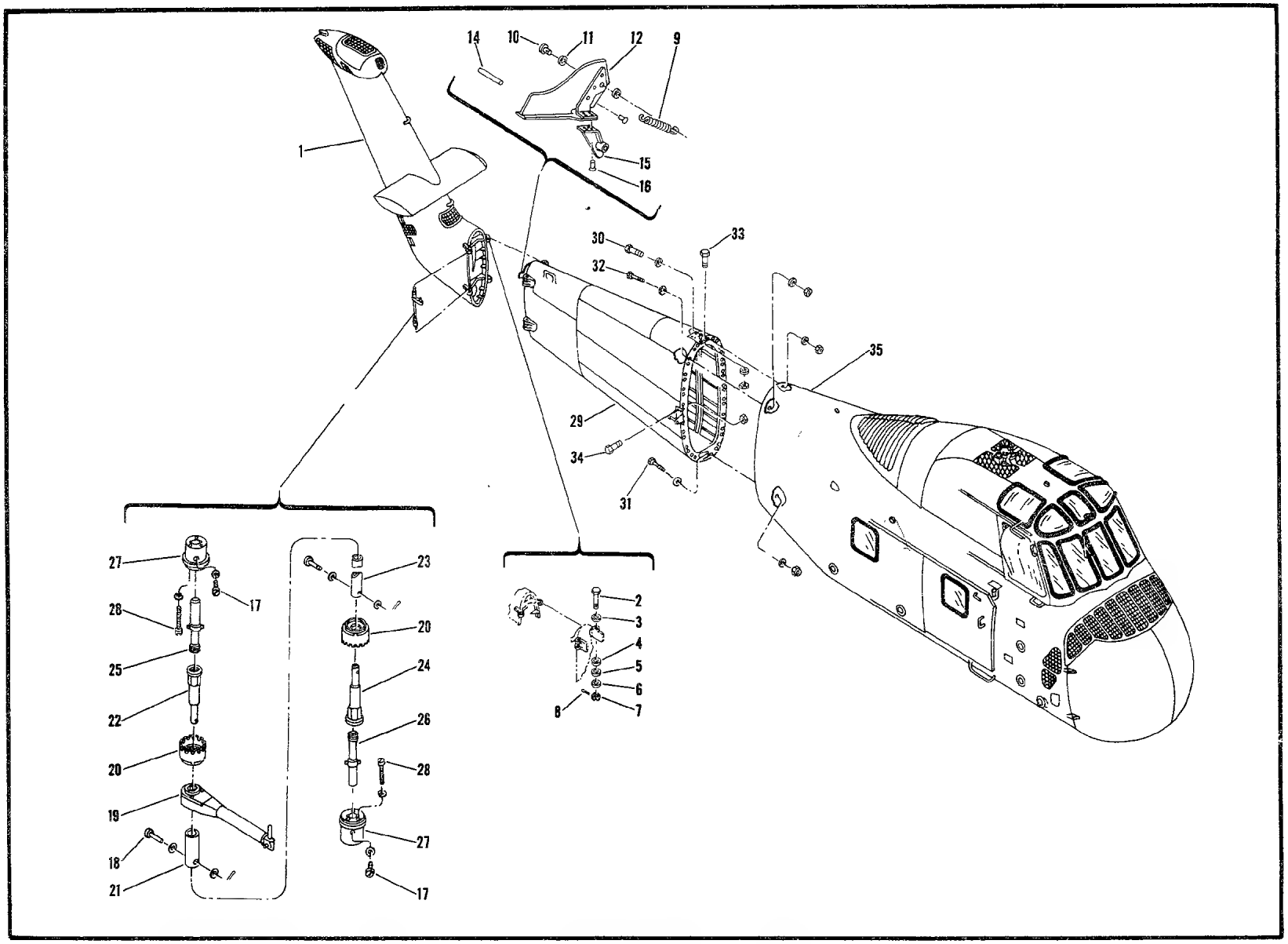

Figure 39. Fuselage and Equipment Assembly

SECTION II

FUNCTIONAL GROUP 05

FORWARD SECTION FUSELAGE AND EQUIPMENT

(1) SOURCE, MAINT AND REC CODE (a) SOURCE CODE	(b) MAINT LEVEL	(c) REC CODE	(2) FEDERAL STOCK NUMBER	(3) DESCRIPTION REFERENCE NUMBER			MODELS USABLE ON	(4) UNIT OF MEAS	(5) QTY INC IN UNIT PACK	(6) QTY INC IN UNIT	(7) 30-DAY DS GS MAINT ALW (a) 1-20	(b) 21-50	(c) 51-100	(8) 1-YR ALWPER 100 EQUIP CNTGCY	(9) DEPOT MAINT ALWPER 100 EQUIP	(10) ILLUSTRATION (a) FIG NO	(b) ITEM NO
				S1620-61506	<78286>	FORWARD SECTION FUSELAGE..... AND EQUIPMENT SEE FIG.39 FOR NHA		EA								40	
				S1635-61230-5	<78286>	.FORWARD TRANSMISSION..... INSTALLATION SEE FIG.82 FOR BREAKDOWN				1						40	1
				S1665-61407-1	<78286>	.ROTOR BRAKE HYDRAULIC..... LINES INSTALLATION SEE FIG.85 FOR BREAKDOWN				1						40	2
				S1645-61020-6	<78286>	.FORWARD FLIGHT AND ENGINE... INSTRUMENT INSTALLATION SEE FIG.109 FOR BREAKDOWN				1						40	3
				S1640-62000	<78286>	.FORWARD FLIGHT CONTROLS..... INSTALLATION SEE FIG.86 FOR BREAKDOWN				1						40	4
				S1630-61000-2	<78286>	.ENGINE THROTTLE CARBURETOR..				1						40	5

(1) SOURCE, MAINT AND REC CODE (a) SOURCE CODE	(b) MAINT LEVEL	(c) REC CODE	(2) FEDERAL STOCK NUMBER	(3) DESCRIPTION REFERENCE NUMBER			MODELS USABLE ON CH-34C	(4) UNIT OF ISSUE	(5) QTY INC IN UNIT PACK	(6) QTY INC IN UNIT	(7) 30-DAY DS/GS MAINT ALW (a) 1-20	(b) 21-50	(c) 51-100	(8) 1-YR ALW PER 100 EQUIP CNTGCY	(9) DEPOT MAINT ALW PER 100 EQUIP	(10) ILLUSTRATION (a) FIG NO	(b) ITEM NO
						CONTINUED AIR AND MIXTURE CONTROLS INSTALLATION USBL EFF 53-4475 THRU 54-3050 SEE FIG.55 FOR BREAKDOWN									40	5
				S1630-61600-5	<78286>	.ENGINE THROTTLE CARBURETOR.. AIR AND MIXTURE CONTROLS INSTALLATION USBL EFF 55-4462 & SUBSEQUENT SEE FIG.56 FOR BREAKDOWN				1					40	
				S1655-61005	<78286>	.FORWARD SECTION ELECTRICAL.. WIRING INSTALLATION SEE FIG.128 FOR BREAKDOWN				1					40	6
				S1630-62400-4	<78286>	.FUEL SYSTEM INSTALLATION.... SEE FIG.77 FOR BREAKDOWN				1					40	7
				S1625-61000-3	<78286>	.MAIN WHEEL BRAKE SYSTEM..... INSTALLATION SEE FIG.54 FOR BREAKDOWN				1					40	8
				S1630-63000-3	<78286>	.LUBRICATION SYSTEM USBL.... EFF 53-4475 THRU 56-4312 SEE FIG.74 FOR BREAKDOWN				1					40	9
				S1630-63100-2	<78286>	.LUBRICATION SYSTEM USBL.... EFF 56-4313 & SUBSEQUENT SEE FIG.75 FOR BREAKDOWN				1					40	
				S1665-61500-1	<78286>	.AUTOMATIC STABILIZATION..... SERVO HYDRAULIC SYSTEM INSTALLATION USBL EFF 53-4475 THRU 56-4312 SEE FIG.144 FOR BREAKDOWN				1					40	
				S1665-61790-1	<78286>	.AUTOMATIC STABILIZATION..... SERVO HYDRAULIC SYSTEM INSTALLATION USBL EFF 56-4313 & SUBSEQUENT SEE FIG.145 FOR BREAKDOWN				1					40	10
				S1650-61003	<78286>	.FURNISHINGS INSTALLATION.... SEE FIG.115 FOR BREAKDOWN				1					40	11
				S1660-61003-1	<78286>	.RADIO INSTALLATION SEE..... FIG.216 FOR BREAKDOWN				1					40	12
				S1660-61700-7	<78286>	.RADIO INSTALLATION SEE..... FIG.216 FOR BREAKDOWN				1					40	
				S1620-61100-6	<78286>	.FORWARD SECTION FUSELAGE.... ASSEMBLY SEE FIG.41 FOR BREAKDOWN				1					40	13
				S1620-61100-6	(78286)	FORWARD SECTION FUSELAGE..... ASSEMBLY SEE FIG.40 FOR NHA									41	

(1) SOURCE, MAINT AND REC CODE (a) SOURCE CODE	(b) MAINT LEVEL	(c) REC CODE	(2) FEDERAL STOCK NUMBER	REFERENCE NUMBER		(3) DESCRIPTION	MODELS USABLE ON CH-34C	(4) UNIT OF ISSUE	(5) QTY INC IN UNIT PACK	(6) QTY INC IN UNIT	(7) 30-DAY DS GS MAINT ALW (a) 1-20	(b) 21-50	(c) 51-100	(8) 1-YR ALW PER 100 EQUIP CNTGCY	(9) DEPOT MAINT ALW PER 100 EQUIP	(10) ILLUSTRATION (a) FIG NO	(b) ITEM NO
				S1620-61700-6	<78286>	.NOSE DOOR INSTALLATION..... SEE FIG.42 FOR BREAKDOWN				1						41	1
				S1620-61599-6	<78286>	.COCKPIT INSTALLATION-PILOTS.				1						41	
				S1620-61599-7	<78286>	..COCKPIT ASSEMBLY-PILOTS....		EA		1						41	
				S1620-61602-1	<78286>	...SKIN INSTALLATION.....				1						41	
			5305-273-5342	AN525-832R12	<88044>	....SCREW,MACHINE.....		EA		164	*	*	*		*	41	2
MF	F			S1620-61602-19	<78286>	....RETAINER-LH.....CODE A MAKEFR		EA		1						41	3
						AR 9535-554-1415 AL ALLY SH											
P	O		1560-981-8731	S1620-61602-32	<78286>	....SCREEN ASSEMBLY..... FUSELAGE		EA		1	*	2	2		*	41	
MF	F			S1620-61602-20	<78286>	....RETAINER-RH.....CODE A MAKEFR		EA		1						41	4
						AR 9535-554-1415 AL ALLY SH											
P	O		1560-981-8732	S1620-61602-33	<78286>	....SCREEN ASSEMBLY,..... FUSELAGE SKIN INSTALLATION,FORWARD		EA		1	*	2	2		*	41	5
			1560-591-9655	S1620-61602-7	<78286>	....SCREEN ASSEMBLY RPL-BY... 1560-981-8730				1						41	
P	O		1560-981-8730	S1620-61602-31	<78286>	....SCREEN ASSEMBLY,..... FUSELAGE RPLS-- 1560-591-9655		EA		1	*	2	2		*	41	6
				S1620-61602-13	<78286>	....HANDLE INSTALLATION.....				1						41	
P	F		1560-332-3514	S1620-65159-3	<78286>	....HANDLE,COCKPIT CANOPY.... ATTACHING PARTS		EA		4	*	*	2		*	41	8
			5306-182-2059	AN3H6A	<88044>	.....BOLT,MACHINE.....		HD		2	*	*	*		*	41	9
			5310-167-0753	AN960PD10L	<88044>	.....WASHER,FLAT.....		HD		4	*	*	*		*	41	
			5310-877-5797	MS21044N3	<96906>	.....NUT,SELF-LOCKING,HEXAGON		EA		2	*	*	*		*	41	
			5306-292-8252	AN4H7A	<88044>	.....BOLT,MACHINE.....		HD		1	*	*	*		*	41	10
			5310-184-9001	AN960PD416L	<88044>	.....WASHER,FLAT.....		HD		2	*	*	*		*	41	
			5310-877-5796	MS21044N4	<96906>	.....NUT,SELF-LOCKING,HEXAGON		EA		1	*	*	*		*	41	
						---*---											
				S1620-61605	<78286>	....SUPPORT INSTALLATION..... PEDAL				1						41	
P	F		1560-570-0597	S1620-61841-10	<78286>	.....BEARING,BALL,BELL CRANK ATTACHING PARTS		EA		1	*	*	*		*	41	11
				MS20470AD4	<96906>	.....RIVET.....		EA		4						41	12
						---*---											
P	F		3110-068-8119	MS20218-2	<96906>	.....BEARING,BALL,BELL CRANK ATTACHING PARTS		EA		1	*	*	*		*	41	13
				MS20470AD4	<96906>	.....RIVET.....		EA		6						41	14
						---*---											
P	F		1560-340-1133	S1640-61726	<78286>	.....FITTING ASSEMBLY.....		EA		1	*	*	*		*	41	15
P	F		3110-142-4466	MS20200KP5	<96906>	.....BEARING,BALL,AIRFRAME..		EA		1	*	*	*		*	41	17
				S1620-61860	<78286>	.....BRACKET INSTALLATION....				1						41	
MF	F			S1620-61860-3	<78286>	.....ANGLE..... MAKEFR		EA		1						41	20
						AR 9535-167-2280 AL ALLY SH ATTACHING PARTS											
				MS20470AD4	<96906>	.....RIVET.....		EA		4						41	21
						---*---											
MF	F			S1620-61860-4	<78286>	[illegible]		EA		1						41	23

(1) SOURCE, MAINT AND REC CODE (a) SOURCE CODE	(b) MAINT LEVEL	(c) REC CODE	(2) FEDERAL STOCK NUMBER	REFERENCE NUMBER	(3) DESCRIPTION	MODELS USABLE ON CH-34C	(4) UNIT OF ISSUE	(5) QTY INC IN UNIT PACK	(6) QTY INC IN UNIT	(7) 30-DAY DS GS MAINT ALW (a) 1-20	(b) 21-50	(c) 51-100	(8) 1-YR ALW PER 100 EQUIP CNTGCY	(9) DEPOT MAINT ALW PER 100 EQUIP	(10) ILLUSTRATION (a) FIG NO	(b) ITEM NO
					CONTINUED										41	22
					MAKEFR											
					AR 9535-167-2280 AL ALLY SH											
					ATTACHING PARTS											
				MS20470AD4 <96906>	.....RIVET.....		EA		2						41	23
					---*---											
MF	F			S1620-61860-2 <78286>	.....BRACKET.....		EA		1						41	24
					MAKEFR											
					AR 9535-554-1414 AL ALLY SH											
				S1620-61612 <78286>	.....TUNNEL INSTALLATION.....				1						41	
X2	F		1560-633-6128	S1620-61603-5 <78286>	.....ANGLE.....		EA		1	*	*	*		*	41	
X2	F			S1620-61612-11 <78286>	.....ANGLE.....		EA		1						41	30
X2	F		1560-565-5604	S1620-61613 <78286>	.....FITTING,TUNNEL.....		EA		1	*	*	*		*	41	
				S1620-61617 <78286>	.....BRACKET INSTALLATION..				1						41	
P	F		1560-547-7517	S1620-61048-4 <78286>	....ROD ASSEMBLY,FUSELAGE....		EA		1	*	*	*		*	41	53
					SECTION-LH											
P	F		1560-545-7128	S1620-61048-5 <78286>	....ROD ASSEMBLY,FUSELAGE....		EA		1	*	*	*		*	41	
					SECTION-RH											
					ATTACHING PARTS											
			5306-156-2533	AN174H6A <88044>	....BOLT,MACHINE.....		HD		1	*	*	*		*	41	54
			5310-184-9001	AN960PD416L <88044>	....WASHER,FLAT.....		HD		2	*	*	*		*	41	
			5310-877-5796	MS21044N4 <96906>	....NUT,SELF-LOCKING,HEXAGON.		EA		1	*	*	*		*	41	
			5306-285-5325	AN174H7A <88044>	....BOLT,MACHINE.....		HD		1	*	*	*		*	41	55
			5310-187-2354	AN960PD416 <88044>	....WASHER,FLAT.....		HD		2	*	*	*		*	41	
			5310-877-5796	MS21044N4 <96906>	....NUT,SELF-LOCKING,HEXAGON.		EA		1	*	*	*		*	41	
					---*---											
			5310-282-4777	AN316C4R <88044>	.....NUT,PLAIN,HEXAGON.....		HD		1	*	*	*		*	41	56
P	F		5306-551-7298	S1620-61048-2 <78286>	.....BOLT,EYE.....		EA		1	*	*	*		*	41	57
P	F		1560-570-0590	S1620-61048-1 <78286>	.....CLEVIS,ROD END.....		EA		1	*	*	*		*	41	63
				S1620-65107 <78286>	...MOTOR INSTALLATION-RH ONLY				1						41	
P	O		6105-373-3526	XW20173-1 <70255>	....MOTOR,DIRECT CURRENT.....		EA		1	*	*	2	7	*	41	64
					SEE FIG.44C FOR											
					BREAKDOWN											
					ATTACHING PARTS											
			5306-182-2015	AN4H4A <88044>	....BOLT,MACHINE.....		HD		4	*	*	*		*	41	65
			5310-184-9001	AN960PD416L <88044>	....WASHER,FLAT.....		HD		4	*	*	*		*	41	
					---*---											
P	D		6105-500-2349	W20208 <70255>	....BASE,MOTOR.....		EA		1					*	41	66
				S1620-63015-28 <78286>	.DAMPER INSTALLATION-LH.....				1						41	
				S1620-63015-27 <78286>	.DAMPER INSTALLATION-RH.....				1						41	
			5315-957-9416	MS20392-3C61 <96906>	..PIN,STRAIGHT,HEADED.....		EA		1	*	*	*		*	41	67
			5310-187-2354	AN960PD416 <88044>	..WASHER,FLAT.....		HD		3	*	*	*		*	41	
			5315-234-1856	MS24665-155 <96906>	..PIN,COTTER.....		HD		1	*	*	*		*	41	
			5315-080-0488	MS20392-2C55 <96906>	..PIN,STRAIGHT,HEADED.....		EA		1	*	*	*		*	41	68
			5310-183-4406	AN960PD10 <88044>	..WASHER,FLAT.....		HD		5	*	*	*		*	41	
			5315-234-1856	MS24665-155 <96906>	..PIN,COTTER.....		HD		1	*	*	*		*	41	
P	F		1680-601-1536	401 <05734>	..SNUBBER ASSEMBLY.....		EA		1	2	4	7		*	41	69
P	O		1560-706-4497	S1620-63015-25 <78286>	..STOP.....		EA		1	2	3	6		*	41	70
X2	F		1560-924-7150	S1620-63015-26 <78286>	..SPACER.....		EA		2	2	2	3		*	41	71
P	F		5340-759-7527	S1620-63015-5 <78286>	..BRACKET,ANGLE.....		EA		1	*	*	2		*	41	72
X2	F		1560-857-3307	S1620-63015-6 <78286>	..BRACKET,ANGLE.....		EA		1	*	*	*		*	41	
					ATTACHING PARTS											

(1) SOURCE, MAINT AND REC CODE (a) SOURCE CODE	(b) MAINT LEVEL	(c) REC CODE	(2) FEDERAL STOCK NUMBER	REFERENCE NUMBER		(3) DESCRIPTION	MODELS USABLE ON CH-34C	(4) UNIT OF ISSUE	(5) QTY INC IN UNIT PACK	(6) QTY INC IN UNIT	(7) 30-DAY DS GS MAINT ALW (a) 1-20	(b) 21-50	(c) 51-100	(8) 1-YR ALW PER 100 EQUIP CNTGCY	(9) DEPOT MAINT ALW PER 100 EQUIP	(10) ILLUSTRATION (a) FIG NO	(b) ITEM NO
P	F		5320-531-0744	ALPPHT6-3	<29666>	..PIN,RIVET.....		EA		4	*	*	*		*	41	73
P	F		5320-489-4823	LCC6	<29666>	..COLLAR,RIVET PIN.....		EA		4	*	*	*		REF	41	
						---*---											
X2	F		1560-869-8160	S1620-63015-9	<78286>	..SUPPORT,FUSELAGE SECTION...		EA		1	*	*	2		*	41	77
X2	F			S1620-63015-20	<78286>	..SUPPORT-RH.....		EA		1						41	
						ATTACHING PARTS											
				MS20470AD4	<96906>	..RIVET.....		EA		3						41	78
						---*---											
				S1620-61551	<78286>	.DOOR INSTALLATION-OIL FILLER				1						41	
MF	F			S1620-61551-8	<78286>	....FILLER.... MAKEFR.....		EA		1						41	84
						AR 9330-260-3806 PLASTIC SH											
P	F		1560-326-3430	S1620-61552	<78286>	....SPRING,HELICAL,TORSION...		EA		1	*	2	2		*	41	89
				S1620-61551-2	<78286>	....HINGE		EA		1						41	90
P	F		5325-639-5575	2600-8W	<71286>	...STUD ASSEMBLY,TURNLOCK....		EA		1	*	*	*		*	41	92
P	F		5310-781-2804	2700LW	<71286>	...WASHER.....		EA		1	*	*	*		*	41	
				S1620-63037-1	<78286>	.BOX INSTALLATION-BATTERY....				1						41	
P	O		1560-658-2908	S1620-66318-13	<78286>	..COVER,FORWARD SECTION.....		EA		1	*	2	2		*	41	94
						USBL EFF 56-4313 &											
						SUBSEQUENT											
						ATTACHING PARTS											
			5305-984-4979	MS35206-222	<96906>	..SCREW,MACHINE.....				4	*	*		*	*	41	95
			5310-550-5009	MS15795-704	<96906>	..WASHER,FLAT.....		HD		8	*	*		*	*	41	
						---*---											
			5340-533-3600	EAB700-12	<81996>	..CLAMP,SUPPORT.....		EA		1	*	*	*		*	41	96
						ATTACHING PARTS											
			5306-182-2008	AN3H17A	<88044>	..BOLT,MACHINE.....		HD		1	*	*	*		*	41	97
			5310-167-0753	AN960PD10L	<88044>	..WASHER,FLAT.....		HD		1	*	*	*		*	41	
			5310-183-4406	AN960PD10	<88044>	..WASHER,FLAT.....		HD		1	*	*	*		*	41	
			5310-877-5797	MS21044N3	<96906>	..NUT,SELF-LOCKING,HEXAGON...		EA		1	*	*	*		*	41	
						---*---											
P	O		1560-633-6970	S1620-66320-10	<78286>	..VENT TUBE,FUSELAGE.....		EA		1	*	*	*		*	41	99
						FORWARD SECTION											
X2	F			S1620-63036	<78286>	..BOX ASSEMBLY-BATTERY.....		EA		1						41	
			5310-811-2483	MK1000-832	<75237>	...NUT-ANCHOR.....		EA		4	*	*	*			41	100
				S1620-63253-1	<78286>	..SUPPORT INSTALLATION.....				1						41	
				S1620-63252-1	<78286>	...SUPPORT ASSEMBLY.....		EA		1						41	
P	F		1560-591-0560	S1650-61873-2	<78286>	.DOOR ASSEMBLY-CARBURETOR....		EA		1	*	*	*		*	41	107
						INDUCTION HEAT											
P	F		1560-731-7925	S1650-66008	<78286>	..STIFFENER-CARBURETOR.....		EA		1	*	*	*		*	41	
						INDUCTION HEAT											
				S1620-61283	<78286>	.RING INSTALLATION.....				1						41	
P	F		5340-598-1474	R4G	<71286>	..RING,RETAINING.....		EA		1	*	*	*		*	41	
			1560-671-5884	S1620-61283-8	<78286>	..RING ASSEMBLY,FORWARD.....										41	
						SECTION RPL-BY											
						1560-657-2905											
P	F		1560-657-2905	S1620-61283-1	<78286>	..RING ASSEMBLY,FORWARD.....		EA		1	*	2	2		*	41	108
						FUSELAGE SECTION CENTER											
						BULKHEAD RPLS--											
						1560-671-5884											
						ATTACHING PARTS											
			5305-639-4812	AN525D832R10	<88044>	..SCREW,MACHINE.....		EA		21	*	*	*		*	41	109

(1) SOURCE, MAINT AND REC CODE (a) SOURCE CODE	(b) MAINT LEVEL	(c) REC CODE	(2) FEDERAL STOCK NUMBER	(3) DESCRIPTION REFERENCE NUMBER			MODELS USABLE ON CH-34C	(4) UNIT OF ISSUE	(5) QTY INC IN UNIT PACK	(6) QTY INC IN UNIT	(7) 30-DAY DS GS MAINT ALW (a) 1-20	(b) 21-50	(c) 51-100	(8) 1-YR ALW PER 100 EQUIP CNTGCY	(9) DEPOT MAINT ALW PER 100 EQUIP	(10) ILLUSTRATION (a) FIG NO	(b) ITEM NO
				S1620-65000-2	<78286>	.COCKPIT CANOPY INSTALLATION. SEE FIG.44 FOR BREAKDOWN				1						41	111
				S1620-65175-1	<78286>	.HINGE INSTALLATION-LH.....				1						41	
				S1620-65175-2	<78286>	.HINGE INSTALLATION-RH.....				1						41	
P	F		1560-563-9876	S1620-65176-5	<78286>	..SUPPORT,FUSELAGE SECTION-LH		EA		1	*	*	*		*	41	
P	F		1560-563-9877	S1620-65176-6	<78286>	..SUPPORT,FUSELAGE SECTION-RH ATTACHING PARTS		EA		1	*	*	*		*	41	
			5305-286-0213	AN525-832R10	<88044>	..SCREW,MACHINE.....		HD		4	*	*	*		*	41	
			5310-184-8966	AN960PD8	<88044>	..WASHER,FLAT.....		HD		8	*	*	*		*	41	
			5310-811-3494	MS21044N08	<96906>	..NUT,SELF-LOCKING,HEXAGON...		EA		4	*	*	*		*	41	
			5305-066-7324	MS24694C64	<96906>	..SCREW,MACHINE.....		EA		8	*	*	*		*	41	
			5310-167-0753	AN960PD10L	<88044>	..WASHER,FLAT.....		HD		8	*	*	*		*	41	
			5310-877-5797	MS21044N3	<96906>	..NUT,SELF-LOCKING,HEXAGON... ---*---		EA		8	*	*	*		*	41	
P	F		1560-563-9872	S1620-65176-1	<78286>	..HINGE,FUSELAGE SECTION-LH..		EA		1	*	*	*		*	41	
P	F		1560-563-9873	S1620-65176-2	<78286>	..HINGE,FUSELAGE SECTION,RH.. ATTACHING PARTS		EA		1	*	*	*		*	41	
			5305-066-7324	MS24694C64	<96906>	..SCREW,MACHINE.....		EA		4	*	*	*		*	41	
			5310-167-0753	AN960PD10L	<88044>	..WASHER,FLAT.....		HD		4	*	*	*		*	41	
			5310-877-5797	MS21044N3	<96906>	..NUT,SELF-LOCKING,HEXAGON... ---*---		EA		4	*	*	*		*	41	
P	F		1560-563-9874	S1620-65176-3	<78286>	..SUPPORT,FUSELAGE SECTION... USBL EFF 58-1721 & SUBSEQUENT		EA		1	*	*	*		*	41	
P	F		1560-563-9875	S1620-65176-4	<78286>	..SUPPORT,FUSELAGE SECTION...		EA		1	*	*	*		*	41	
				S1620-65223-3	<78286>	.WINDOW INSTALLATION..... SLIDING-LH				1						41	
				S1620-65223-4	<78286>	.WINDOW INSTALLATION..... SLIDING-RH				1						41	
P	O	R	1560-918-0690	S1620-65223-53	<78286>	..WINDOW ASSEMBLY,SLIDING,... FORWARD FUSELAGE RPLS-- 1560-575-2053, 1560-633-6121 OBSLTS 1560-327-3864 1560-340-1358, 1560-569-6536,& 1560-626-7163 USBL-AFT-CMPL-W MWO 55-1520-202-34/27		EA		1	*	2	2		*	41	112
		R	1560-633-6120	S1620-65223-10	<78286>	..WINDOW ASSEMBLY,COCKPIT RH. OBS-AFT-CMPL-W MWO 55-1520-202-34/27		EA		1						41	
P	O	R	1560-918-0689	S1620-65223-54	<78286>	..WINDOW ASSEMBLY,SLIDING,... FORWARD FUSELAGE-RH USE-AFT-CMPL-W MWO 55-1520-202-34127 SEE FIG.43 FOR BREAKDOWN		EA		1	*	2	2		*	41	
				S1620-65212-2	<78286>	.STOP INSTALLATION-WINDOW,LH.				1						41	
				S1620-65212-6	<78286>	.STOP INSTALLATION-WINDOW,RH.				1						41	
P	F		1560-633-6967	S1620-65212-3	<78286>	..STOP,WINDOW-LH.....		EA		1	*	*	*		*	41	113
P	F		1560-633-6968	S1620-65212-5	<78286>	..STOP,WINDOW-RH..... ATTACHING PARTS		EA		1	*	*	*		*	41	

(1) SOURCE, MAINT AND REC CODE (a) SOURCE CODE	(b) MAINT LEVEL	(c) REC CODE	(2) FEDERAL STOCK NUMBER	REFERENCE NUMBER		(3) DESCRIPTION	MODELS USABLE ON CH-34C	(4) UNIT OF ISSUE	(5) QTY INC IN UNIT PACK	(6) QTY INC IN UNIT	(7) 30-DAY DS/GS MAINT ALW (a) 1-20	(b) 21-50	(c) 51-100	(8) 1-YR ALW PER 100 EQUIP CNTGCY	(9) DEPOT MAINT ALW PER 100 EQUIP	(10) ILLUSTRATION (a) FIG NO	(b) ITEM NO
			5305-273-5342	AN525-832R12	<88044>	..SCREW,MACHINE.....		EA		2	*	*	*		*	41	114
			5310-184-8966	AN960PD8	<88044>	..WASHER,FLAT.....		HD		2	*	*	*		*	41	
						---*---											
				S1620-61206	<78286>	.STOP INSTALLATION-DOOR.....				1						41	
X2	F			S1620-61206-1	<78286>	..STOP-DOOR.....		EA		1						41	117
X2	F			S1620-61206-2	<78286>	..STOP-DOOR.....		EA		1						41	118
				S1620-61100-11	<78286>	.FITTING INSTALLATION.....				2						41	
P	F		1560-563-9859	S1620-61884	<78286>	..FITTING ASSEMBLY,FUSELAGE..		EA		1	*	*	2		*	41	121
						RPLS-- 1560-091-3896											
P	F		1560-613-3214	S1620-61884-3	<78286>	..FITTING,FORWARD SECTION....		EA		1	*	2	2		*	41	
						STEP											
						ATTACHING PARTS											
			5306-579-0944	NAS1104-8	<80205>	..BOLT,SHEAR.....		EA		2	*	*	*		*	41	122
			5310-184-9001	AN960PD416L	<88044>	..WASHER,FLAT.....		HD		4	*	*	*		*	41	
			5310-543-4443	MS20364-428A	<96906>	..NUT,SELF-LOCKING,HEXAGON...		HD		2	*	*	*		*	41	
			5306-182-1528	AN4H10	<88044>	..BOLT,MACHINE-LH.....		HD		2	*	*	*		*	41	123
			5306-182-1958	AN4H10A	<88044>	..BOLT,MACHINE-RH.....		HD		2	*	*	*		*	41	
			5310-187-2405	AN960PD1416	<88044>	..WASHER,FLAT.....		EA		4	*	*	*		*	41	
			5310-877-5796	MS21044N4	<96906>	..NUT,SELF-LOCKING,HEXAGON...		EA		2	*	*	*		*	41	
			5306-182-1528	AN4H10	<88044>	..BOLT,MACHINE.....		HD		2	*	*	*		*	41	124
			5310-187-2354	AN960PD416	<88044>	..WASHER,FLAT.....		HD		4	*	*	*		*	41	
			5310-877-5796	MS21044N4	<96906>	..NUT,SELF-LOCKING,HEXAGON...		EA		2	*	*	*		*	41	
						---*---											
P	F		1560-091-3919	S1620-61298-5	<78286>	.FITTING ASSEMBLY-LH.....		EA		1	*	*	*		*	41	125
X2	F			S1620-61298-6	<78286>	.FITTING ASSEMBLY-RH.....		EA		1						41	
						ATTACHING PARTS											
			5306-180-2749	AN5H10	<88044>	.BOLT,MACHINE.....		HD		7	*	*	*		*	41	126
			5310-187-2399	AN960PD516	<88044>	.WASHER,FLAT.....		HD		14	*	*	*		*	41	
			5310-088-0553	MS21044N5	<96906>	.NUT,SELF-LOCKING,HEXAGON....		HD		7	*	*	*		*	41	
						---*---											
X1				S1620-61298-7	<78286>	..FITTING,FORWARD SECTION....		EA		1						41	
P	F		1560-662-5643	S1620-61297	<78286>	..BEARING,SLEEVE.....		EA		2	*	*	*		*	41	127
				S1620-61201	<78286>	.DOOR INSTALLATION-CABIN.....				1						41	128
						SEE FIG.48 FOR BREAKDOWN											
				S1620-61952	<78286>	.LOCK INSTALLATION.....				1						41	
P	F		1560-633-6955	S1620-61952-6	<78286>	..CATCH,SPRING.....		EA		1	*	2	2		*	41	129
			5315-234-1856	MS24665-155	<96906>	..PIN,COTTER.....		HD		1	*	*	*		*	41	132
P	F		1560-633-6954	S1620-61952-2	<78286>	..PIN ASSEMBLY.....		EA		1	*	*	*		*	41	133
P	F		1560-939-7619	S1620-61957	<78286>	..SPRING-COMPRESSION.....		EA		1	*	*	*		*	41	134
			5310-187-2354	AN960PD416	<88044>	..WASHER,FLAT.....		HD		3	*	*	*		*	41	135
MF	F			S1620-61952-5	<78286>	..SPACER.....		EA		1						41	138
						MAKEFR											
						AR 9535-554-1416 AL ALLY SH											
				S1620-61646-10	<78286>	.EXTENSION INSTALLATION.....				1						41	
			5320-531-0792	NAS1466-4	<80205>	...PIN,RIVET.....		EA		1	*	*	*		*	41	139
P	F		5320-489-4823	LCC6	<29666>	...COLLAR,RIVET PIN.....		EA		1	*	*	*		REF	41	
P	F		5320-489-4823	LCC6	<29666>	...COLLAR,RIVET PIN.....		EA		1	*	*	*		REF	41	
P	F		5320-619-0157	ALPPHT6-6	<29666>	...PIN,RIVET.....		EA		1	*	*	*		*	41	141
P	F		5320-489-4823	LCC6	<29666>	...COLLAR,RIVET PIN.....		EA		1	*	*	*		REF	41	
			5320-223-6093	NAS179-6	<80205>	...COLLAR.....		EA		1	*	*	*			41	
X2	F			S1620-61645-5	<78286>	...TEE-SIDE.....		EA		1						41	149
						ATTACHING PARTS											

(1) SOURCE, MAINT AND REC CODE (a) SOURCE CODE	(b) MAINT LEVEL	(c) REC CODE	(2) FEDERAL STOCK NUMBER	REFERENCE NUMBER		(3) DESCRIPTION	MODELS USABLE ON CH-34C	(4) UNIT OF ISSUE	(5) QTY INC IN UNIT PACK	(6) QTY INC IN UNIT	(7) 30-DAY DS GS MAINT ALW (a) 1-20	(b) 21-50	(c) 51-100	(8) 1 YR ALW PER 100 EQUIP CNTGCY	(9) DEPOT MAINT ALW PER 100 EQUIP	(10) ILLUSTRATION (a) FIG NO	(b) ITEM NO
			5320-205-7674	HS52P6-10	<73197>	...PIN,RIVET.....		EA		1	*	*	*			41	151
			5310-167-0753	AN960PD10L	<88044>	...WASHER,FLAT.....		HD		1	*	*	*		*	41	
P	F		5320-038-3212	HS15-6	<73197>	...COLLAR,RIVET PIN.....		EA		1					REF	41	
				MS20470AD4	<96906>	...RIVET.....		EA		5						41	152
						---*---											
				S1620-61645-42	<78286>	...COVER ASSEMBLY RPL-BY.... 1560-074-1184										41	
P	F		1560-074-1184	S1620-61645-52	<78286>	...COVER ASSEMBLY,FUSELAGE... RPLS-- PN S1620-61645-42		EA		1	*	*	*		*	41	
X2	F			S1620-61645-40	<78286>	....COVER-BOTTOM.....		EA		1						41	156
P	O		1560-564-1528	S1620-61214-13	<78286>	.HATCH ASSEMBLY,FORWARD..... SECTION,EMERGENCY RPLS-- 1560-330-6180 1560-694-4759		EA		1	2	3	6		*	41	158
			1560-091-3905	S1620-61214-2	<78286>	.HATCH ASSEMBLY..... RPL-BY 1560-564-1529				1						41	
			1560-330-6181	S1620-61214-11	<78286>	.HATCH ASSEMBLY..... RPL-BY 1560-564-1529				1						41	
P	O		1560-564-1529	S1620-61214-11	<78286>	.HATCH ASSEMBLY RPLS--..... 1560-091-3905, 1560-330-6181		EA		1	*	*	*		*	41	
			1560-326-3425	S1620-61220	<78286>	..WINDOW,FUSELAGE SECTION.... RPL-BY 1560-611-3469										41	
P	O		1560-611-3469	S1620-61220-1	<78286>	..WINDOW,FUSELAGE SECTION.... RPLS-- 1560-326-3425 ATTACHING PARTS		EA		1	2	2	3		*	41	159
P	O		9320-379-2615	33197R	<30778>	..RUBBER SPECIAL.....		EA		1	*	*	*		*	41	160
P	O		9320-250-0816	34465R	<30778>	..RUBBER,SPECIAL-SHAPED..... SECTION		FT		1	*	*	*		*	41	161
						---*---											
			1560-589-9122	11371	<71643>	..SEAL RPL-BY..... 1560-591-6831				1						41	
P	F		1560-591-6831	S1605-2148	<78286>	..SEAL RPLS--..... 1560-589-9122		EA		1	2	2	4		*	41	162
X2	F			S1620-61221-1	<78286>	..SUPPORT AND LATCH PLATE.... ASSEMBLY ATTACHING PARTS		EA		2						41	163
X2	O			S1620-61613-1	<78286>	..HATCH ASSEMBLY-EMERGENCY... U/W 1560-564-1528		EA		1						41	168
X2	O			S1620-61613-2	<78286>	..HATCH ASSEMBLY-EMERGENCY... U/W PN S1620-61214-11		EA		1						41	
				S1620-62510	<78286>	.HANDLE INSTALLATION.....				1						41	
P	F		1560-567-1100	S1620-65159-5	<78286>	..HANDLE,FUSELAGE..... ATTACHING PARTS		EA		1	*	*	*		*	41	169
			5306-515-7527	AN4DDH12A	<88044>	..BOLT,MACHINE.....		EA		1	*	*	*		*	41	170
			5310-187-2354	AN960PD416	<88044>	..WASHER,FLAT.....		HD		2	*	*	*		*	41	
			5310-857-4960	MS21044D4	<96906>	..NUT,SELF-LOCKING,HEXAGON...		EA		1	*	*	*		*	41	
			5306-638-5757	AN4DDH11A	<88044>	..BOLT,MACHINE.....		EA		1	*	*	*		*	41	171
			5310-187-2354	AN960PD416	<88044>	..WASHER,FLAT.....		HD		2	*	*	*		*	41	
			5310-857-4960	MS21044D4	<96906>	..NUT,SELF-LOCKING,HEXAGON...		EA		1	*	*	*		*	41	
						---*---											
P	F		1560-567-1100	S1620-65159-5	<78286>	..HANDLE,FUSELAGE.....		EA		1	*	*	*		REF	41	173

(1) SOURCE, MAINT AND REC CODE (a) SOURCE CODE	(b) MAINT LEVEL	(c) REC CODE	(2) FEDERAL STOCK NUMBER	REFERENCE NUMBER		(3) DESCRIPTION	MODELS USABLE ON CH-34C	(4) UNIT OF ISSUE	(5) QTY INC IN UNIT PACK	(6) QTY INC IN UNIT	(7) 30-DAY DS/GS MAINT ALW (a) 1-20	(b) 21-50	(c) 51-100	(8) 1-YR ALW PER 100 EQUIP CNTGCY	(9) DEPOT MAINT ALW PER 100 EQUIP	(10) ILLUSTRATION (a) FIG NO	(b) ITEM NO
						CONTINUED										41	173
						ATTACHING PARTS											
			5306-292-5204	AN4DDH7A	<88044>	..BOLT,MACHINE.....		EA		1	*	*	*		*	41	174
			5310-187-2354	AN960PD416	<88044>	..WASHER,FLAT.....		HD		1	*	*	*		*	41	
			5310-857-4960	MS21044D4	<96906>	..NUT,SELF-LOCKING,HEXAGON...		EA		1	*	*	*		*	41	
			5306-638-5757	AN4DDH11A	<88044>	..BOLT,MACHINE.....		EA		1	*	*	*		*	41	175
			5310-187-2354	AN960PD416	<88044>	..WASHER,FLAT.....		HD		2	*	*	*		*	41	
			5310-857-4960	MS21044D4	<96906>	..NUT,SELF-LOCKING,HEXAGON...		EA		1	*	*	*		*	41	
						---*---											
P	F		1560-567-1100	S1620-65159-5	<78286>	..HANDLE,FUSELAGE.....		EA		1	*	*	*		REF	41	178
						ATTACHING PARTS											
			5306-515-7527	AN4DDH12A	<88044>	..BOLT,MACHINE.....		EA		1	*	*	*		*	41	179
			5310-187-2354	AN960PD416	<88044>	..WASHER,FLAT.....		HD		2	*	*	*		*	41	
			5310-857-4960	MS21044D4	<96906>	..NUT,SELF-LOCKING,HEXAGON...		EA		1	*	*	*		*	41	
			5306-638-5757	AN4DDH11A	<88044>	..BOLT,MACHINE.....		EA		1	*	*	*		*	41	180
			5310-187-2354	AN960PD416	<88044>	..WASHER,FLAT.....		HD		2	*	*	*		*	41	
			5310-857-4960	MS21044D4	<96906>	..NUT,SELF-LOCKING,HEXAGON...		EA		1	*	*	*		*	41	
						---*---											
P	F		1560-567-1100	S1620-65159-5	<78286>	..HANDLE,FUSELAGE.....		EA		1	*	*	*		REF	41	183
						ATTACHING PARTS											
			5306-638-5757	AN4DDH11A	<88044>	..BOLT,MACHINE.....		EA		2	*	*	*		*	41	184
			5310-187-2354	AN960PD416	<88044>	..WASHER,FLAT.....		HD		4	*	*	*		*	41	
			5310-857-4960	MS21044D4	<96906>	..NUT,SELF-LOCKING,HEXAGON...		EA		2	*	*	*		*	41	
						---*---											
				S1620-61212-4	<78286>	.EMERGENCY HATCH MECHANISM...				1						41	187
						INSTALLATION SEE FIG.											
						47 FOR BREAKDOWN											
				S1620-61182-40	<78286>	.COVER INSTALLATION-AFT.....				1						41	
P	O		1560-326-3415	S1620-61182-5	<78286>	..COVER ASSEMBLY,FUSELAGE....		EA		1	*	2	2		*	41	188
						ATTACHING PARTS											
			5305-558-8934	AN525D10R8	<88044>	..SCREW,MACHINE.....		HD		2	*	*	*		*	41	189
			5310-167-0753	AN960PD10L	<88044>	..WASHER,FLAT.....		HD		2	*	*	*		*	41	
			5310-183-4406	AN960PD10	<88044>	..WASHER,FLAT.....		HD		2	*	*	*		*	41	
			5310-877-5798	MS21044D3	<96906>	..NUT,SELF-LOCKING,HEXAGON...		EA		2	*	*	*		*	41	
			5305-576-7810	AN525D10R10	<88044>	..SCREW,MACHINE.....		EA		13	*	*	*		*	41	190
						---*---											
				S1620-63062-1	<78286>	.COVER INSTALLATION-FORWARD..				1						41	
P	O		1560-625-4514	S1620-63062-2	<78286>	..COVER ASSEMBLY-FORWARD.....		EA		1	*	2	2		*	41	191
AF	F			S1620-63062-4	<78286>	..PLATE ASSEMBLY.....		EA		1						41	192
P	O		1560-571-8251	S1620-61182-36	<78286>	..COVER ASSEMBLY,FUSELAGE....		EA		1	*	2	2		*	41	
						RPL-BY 1560-571-8251											
P	O		1560-571-8251	S1620-61182-36	<78286>	..COVER ASSEMBLY.....		EA		1	*	*	*		*	41	
						RPLS-- 1560-326-3414											
				S1620-61219	<78286>	.DRAIN INSTALLATION.....				1						41	
P	F		1560-560-5349	S1620-61219-4	<78286>	..HOSE.....		EA		1	*	*	*		*	41	199
				S1620-61211	<78286>	.WINDOW INSTALLATION.....				1						41	
P	F		1560-611-3468	S1620-61211-2	<78286>	..WINDOW,FORWARD SECTION.....		EA		1	2	2	3		*	41	200
						RPLS-- 1560-326-3424											
						ATTACHING PARTS											
P	F		9320-379-2615	33197R	<30778>	..RUBBER SPECIAL.....		EA		1	*	*	*		REF	41	201
P	F		9320-250-0816	34465R	<30778>	..RUBBER,SPECIAL-SHAPED.....		FT		1	*	*	*		REF	41	202
						SECTION											

(1) SOURCE, MAINT AND REC CODE (a) SOURCE CODE	(b) MAINT LEVEL	(c) REC CODE	(2) FEDERAL STOCK NUMBER	REFERENCE NUMBER	(3) DESCRIPTION	MODELS USABLE ON CH-34C	(4) UNIT OF ISSUE	(5) QTY INC IN UNIT PACK	(6) QTY INC IN UNIT	(7) 30-DAY DS GS MAINT ALW (a) 1-20	(b) 21-50	(c) 51-100	(8) 1 YR ALW PER 100 EQUIP CNTGCY	(9) DEPOT MAINT ALW PER 100 EQUIP	(10) ILLUSTRATION (a) FIG NO	(b) ITEM NO
					CONTINUED										41	202
					---*---											
P	C		1560-336-0057	S14-20-2637-4 <78286>	..STRAP ASSEMBLY,FORWARD..... SECTION		EA		1	2	3	7		*	41	203
P	O		1560-692-2523	S14-20-2637-5 <78286>	..STRAP ASSEMBLY,FORWARD.....		EA		1	*	*	*		*	41	
				S1620-61930 <78286>	.GUTTER INSTALLATION.....				1						41	
				S1620-61930-5 <78286>	..COVER INSTALLATION.....				1						41	
MF	F			S1620-61930-1 <78286>	...COVER..... MAKEFR AR 9535-554-1416 AL ALLY SH		EA		1						41	204
				S1620-61930-6 <78286>	..COVER INSTALLATION.....				1						41	
MF	F			S1620-61930-2 <78286>	...COVER..... MAKEFR AR 9535-554-1416		EA		1						41	205
				S1620-61205-19 <78286>	.GUTTER AND TRACK..... INSTALLATION				1						41	
P	F		1560-675-1235	S1620-61205-21 <78286>	..BRACKET,ANGLE,CABIN..... SLIDING DOOR		EA		2	*	2	2		*	41	
X2	F		1560-675-1236	S1620-61205-22 <78286>	..BLOCK,STOP.....		EA		2	*	2	2		*	41	205A
P	F		1560-609-3026	S1620-61205-13 <78286>	..SUPPORT ASSEMBLY,CABIN..... SLIDING DOOR RPLS-- 1560-609-3025, 1560-609-3027		EA		3	2	4	9		*	41	206
P	F		1560-591-6826	S1620-61210-6 <78286>	...RACE,CABIN SLIDING DOOR... RPLS--1560-332-6553 ATTACHING PARTS		EA		1	2	3	7		*	41	207
X1				S1620-61205-4 <78286>	...TEE,CABIN DOOR.....		EA		1						41	209
P	F		1560-326-3422	S1620-61210-1 <78286>	..TRACK ASSEMBLY,GUTTER AND.. TRACK ATTACHING PARTS		EA		1	3	7	14		*	41	210
			5305-720-8706	AN509C8R7 <88044>	..SCREW,MACHINE.....		EA		13	*	*	*			41	211
			5310-685-3744	AN960C8 <88044>	..WASHER,FLAT.....		HD		13	*	*	*		*	41	
			5310-807-1466	MS21042-08 <96906>	..NUT,SELF-LOCKING,HEXAGON...				13	*	*	*		*	41	
					---*---											
P	F		1560-663-2954	S14-20-2946 <78286>	...SPRING,HELICAL,TORSION....		EA		1	*	*	*		*	41	
MF	F			S1620-61854 <78286>	...BRACKET,FUSELAGE..... MAKEFR AR 9535-554-1412 AL ALLY SH		EA		1						41	
				S1620-62302 <78286>	.BOTTOM STRUCTURE..... INSTALLATION USBL EFF 53-4475 THRU 55-4504 SEE FIG.49 FOR BREAKDOWN				1						41	212
				S1620-62325 <78286>	.BOTTOM STRUCTURE..... INSTALLATION USBL EFF 56-4284 & SUBSEQUENT SEE FIG.49 FOR BREAKDOWN				1						41	
				S1620-61100-7 <78286>	.CABIN ASSEMBLY SEE FIG.50.. FOR BREAKDOWN		EA		1						41	213
P	F		1560-086-6849	S1620-66499-7 <78286>	.ANGLE,FORWARD FUSELAGE.....		EA		1	*	*	*		*	41	
P	F		1560-086-6846	S1620-66499-11 <78286>	.COLLECTOR DRAIN,FORWARD-LH..		EA		1	*	*	*		*	41	
P	F		1560-086-6847	S1620-66499-12 <78286>	.COLLECTOR DRAIN,FORWARD-RH..		EA		1	*	*	*		*	41	
			4720-086-6845	S1620-66499-16 <78286>	.HOSE ASSEMBLY.....		EA		1	*	*	*			41	

(1) SOURCE, MAINT AND REC CODE (a) SOURCE CODE	(b) MAINT LEVEL	(c) REC CODE	(2) FEDERAL STOCK NUMBER	REFERENCE NUMBER		(3) DESCRIPTION	MODELS USABLE ON CH-34C	(4) UNIT OF ISSUE	(5) QTY INC IN UNIT PACK	(6) QTY INC IN UNIT	(7) 30-DAY DS/GS MAINT ALW (a) 1-20	(b) 21-50	(c) 51-100	(8) 1-YR ALW PER 100 EQUIP CNTGCY	(9) DEPOT MAINT ALW PER 100 EQUIP	(10) ILLUSTRATION (a) FIG NO	(b) ITEM NO
						CONTINUED										41	
						ATTACHING PARTS											
			5340-990-9300	EAB700D6	<81996>	.CLAMP,LOOP.....		EA		2	*	*	*		*	41	
			5305-984-6197	MS35206-249	<96906>	.SCREW,MACHINE.....				2	*	*	*		*	41	
			5310-045-3299	MS35338-42	<96906>	.WASHER,LOCK.....				2	*	*	*	*	*	41	
			5310-176-8135	AN340-8	<88044>	.NUT,PLAIN,HEXAGON.....		GR		2	*	*	*		*	41	
						---*---											
P	F		1560-086-6848	S1620-66499-15	<78286>	.OUTLET WELDMENT,FORWARD.....		EA		1	*	*	*		*	41	
P	O		1560-624-0175	EAB20	<81996>	POLISHING KIT,PLEXIGLASS.....		EA		1	*	*	*		*	41	
						SEE FUNCTIONAL GROUP 50											
						FOR COMPONENTS											
P	O		1560-695-4909	1560EG006	<81996>	REPAIR KIT,PLEXIGLASS.....		EA		1	*	*	*		*	41	
						SEE FUNCTIONAL GROUP 50											
						FOR COMPONENTS											
						CODE A											
						USBL EFF 53-4511&SUBSEQUENT											
				S1620-61700-6	<78286>	NOSE DOOR INSTALLATION SEE..										42	
						FIG.41 FOR NHA											
			1560-326-3433	S1620-61701-1	<78286>	.DOOR ASSEMBLY RPL-BY.....				1						42	
						1560-672-4825											
		R	1560-348-8460	S1620-61701-17	<78286>	.DOOR ASSEMBLY-LH RPL-BY....										42	
						1560-672-4825											
		R	1560-625-4516	S1620-64087-1	<78286>	.DOOR ASSEMBLY-LH RPL-BY....										42	
						1560-672-4825											
			1560-650-7010	S1620-64087-10	<78286>	.DOOR ASSEMBLY RPL-BY.....				1						42	
						1560-672-4825											
P	O	R	1560-672-4825	S1620-64087-20	<78286>	.NOSE DOOR ASSEMBLY RPLS--..		EA		1	*	2	2	19	*	42	1
						1560-326-3433,											
						1560-348-8460,											
						1560-625-4516,&											
						1560-650-7010											
		R	1560-326-3434	S1620-61702-1	<78286>	.DOOR ASSEMBLY-RH RPL-BY....										42	
						1560-672-3549											
		R	1560-348-8473	S1620-61702-23	<78286>	.DOOR ASSEMBLY-RH RPL-BY....										42	
						1560-672-3549											
		R	1560-625-4517	S1620-64088-1	<78286>	.DOOR ASSEMBLY-RH RPL-BY....										42	
						1560-672-3549											
		R	1560-766-0924	S1620-61702	<78286>	.DOOR ASSEMBLY RPL-BY.....										42	
						1560-672-3549											
P	O	R	1560-672-3549	S1620-64088-10	<78286>	.DOOR ASSEMBLY-RH RPLS--....		EA		1	*	2	2	17	*	42	
						1560-326-3434,											
						1560-348-8473,											
						1560-625-4517,&											
						1560-766-0924											
						ATTACHING PARTS											
			5306-182-1938	AN5CH24	<88044>	.BOLT,MACHINE.....		EA		4	*	*	*		*	42	2

(1) SOURCE, MAINT AND REC CODE (a) SOURCE CODE	(b) MAINT LEVEL	(c) REC CODE	(2) FEDERAL STOCK NUMBER	REFERENCE NUMBER	(3) DESCRIPTION	MODELS USABLE ON CH-34C	(4) UNIT OF ISSUE	(5) QTY INC IN UNIT PACK	(6) QTY INC IN UNIT	(7) 30-DAY DS GS MAINT ALW (a) 1-20	(b) 21-50	(c) 51-100	(8) 1-YR ALW PER 100 EQUIP CNTGCY	(9) DEPOT MAINT ALW PER 100 EQUIP	(10) ILLUSTRATION (a) FIG NO	(b) ITEM NO
			5310-184-8980	AN960PD516L	<88044> .WASHER,FLAT.....		HD		12	*	*	*		*	42	
			5310-167-1281	AN310C5	<88044> .NUT,CASTELLATED,HEXAGON.....		HD		4	*	*	*		*	42	
			5315-234-1856	MS24665-155	<96906> .PIN,COTTER.....		HD		4	*	*	*		*	42	
					---*---											
				S1620-64089-1	<78286> ..SUPPORT INSTALLATION..... ANTENNA-LH				1						42	3
X2	F		1560-908-6774	S1620-64089-3	<78286> ...SUPPORT,WELD ASSEMBLY.....		EA			*	*	*			42	
				S1620-64089-21	<78286> ....BRACKET,ANTENNA MOUNTING.		EA		1						42	
			1560-772-5542	S1620-64089-2	<78286> ..SUPPORT INSTALLATION..... ANTENNA-RH		EA		1	*	*	*			42	
X2	F		1560-960-0433	S1620-64089-4	<78286> ...SUPPORT,WELD ASSEMBLY.....		EA		1	*	*	*		*	42	
MF	F			S1620-64089-22	<78286> ....PLATE,SUPPORT WELD..... MAKEFR		EA		1						42	
					AR 9535-554-1417 AL ALLY SH											
				S1620-61714-1	<78286> ..LATCH INSTALLATION-LH.....				1						42	
				S1620-61714-3	<78286> ..LATCH INSTALLATION-RH.....				1						42	
P	F		5340-376-5774	117205	<77932> ...TOGGLE ASSEMBLY,LATCH..... ATTACHING PARTS		EA		1	*	2	2		*	42	4
			5306-182-2006	AN3H15A	<88044> ...BOLT,MACHINE.....		EA		1	*	*	*		*	42	5
			5310-167-0753	AN960PD10L	<88044> ...WASHER,FLAT.....		HD		2	*	*	*		*	42	
			5310-877-5797	MS21044N3	<96906> ...NUT,SELF-LOCKING,HEXAGON..		EA		1	*	*	*		*	42	
					---*---											
P	F		5340-376-5773	117204	<77932> ...HOUSING ASSEMBLY..... ATTACHING PARTS		EA		1	2	2	4		*	42	6
			5306-182-2006	AN3H15A	<88044> ...BOLT,MACHINE.....		EA		1	*	*	*		*	42	7
			5310-167-0753	AN960PD10L	<88044> ...WASHER,FLAT.....		HD		2	*	*	*		*	42	
			5310-877-5797	MS21044N3	<96906> ...NUT,SELF-LOCKING,HEXAGON..		EA		1	*	*	*		*	42	
					---*---											
P	F		1560-326-3443	S1620-61716	<78286> ...HANDLE,ENGINE..... COMPARTMENT DOOR ATTACHING PARTS		EA		1	*	*	2		*	42	8
			5320-843-7881	MS20613-5P20	<96906> ...RIVET,SOLID.....		EA		2	*	*	*		*	42	9
					---*---											
MF	F			S1620-61715-9	<78286> ...SHAFT,NOSE DOOR LATCH..... MAKEFR		EA		1						42	10
					AR 4710-277-9870 TUBE											
					ATTACHING PARTS											
			5305-180-3326	AN525-10R16	<88044> ...SCREW,MACHINE.....		HD		1	*	*	*		*	42	11
			5310-877-5797	MS21044N3	<96906> ...NUT,SELF-LOCKING,HEXAGON..		EA		2	*	*	*		*	42	
					---*---											
P	O		1560-663-2973	S14-20-2151	<78286> ...SPRING,HELICAL,EXTENSION..		EA		1	*	2	2		*	42	12
P	F		1560-327-3858	S1620-61724	<78286> ...ROD ASSEMBLY,FUSELAGE..... LOWER ATTACHING PARTS		EA		1	*	*	*		*	42	13
			5306-151-1961	AN23-9	<88044> ...BOLT,CLEVIS.....		EA		1	*	*	*		*	42	14
			5310-167-0753	AN960PD10L	<88044> ...WASHER,FLAT.....		HD		2	*	*	*		*	42	
			5310-285-2177	AN320-3	<88044> ...NUT,SLOTTED,HEXAGON.....		HD		1	*	*	*		*	42	
			5315-234-1856	MS24665-155	<96906> ...PIN,COTTER.....		HD		1	*	*	*		*	42	
			5306-151-1960	AN23-8	<88044> ...BOLT,MACHINE.....		EA		1	*	*	*		*	42	15
			5310-167-0753	AN960PD10L	<88044> ...WASHER,FLAT.....		HD		2	*	*	*		*	42	
			5310-285-2177	AN320-3	<88044> ...NUT,SLOTTED,HEXAGON.....		HD		1	*	*	*		*	42	
			5315-234-1856	MS24665-155	<96906> ...PIN,COTTER.....		HD		1	*	*	*		*	42	

(1) SOURCE, MAINT AND REC CODE (a) SOURCE CODE	(b) MAINT CODE	(c) REC CODE	(2) FEDERAL STOCK NUMBER	REFERENCE NUMBER	(3) DESCRIPTION	MODELS USABLE ON CH-34C	(4) UNIT OF ISSUE	(5) QTY INC IN UNIT PACK	(6) QTY INC IN UNIT	(7) 30-DAY DS GS MAINT ALW (a) 1-20	(b) 21-50	(c) 51-100	(8) 1-YR ALWPER 100 EQUIP CNTGCY	(9) DEPOT MAINT ALWPER 100 EQUIP	(10) ILLUSTRATION (a) FIG NO	(b) ITEM NO
					CONTINUED										42	
					---*---											
X1				NAS75-3-005 <80205>	....BUSHING,SLEEVE WHEN..... EXHTD RQTN NHA 1560-327-3858		EA		1						42	
			1560-567-1095	S1620-61719-1 <78286>	...ARM,NOSE DOOR LATCH-LH.... RPL-BY 1560-245-3080										42	
P	F		1560-245-3080	S14-20-2155-3 <78286>	...BELL CRANK-LH RPLS-..... 1560-567-1095		EA		1	*	*	*		*	42	16
				S1620-61719-2 <78286>	...ARM,ENGINE DOOR LATCH-RH..		EA		1						42	
X2	F		1560-245-3081	S14-20-2155-4 <78286>	...BELLCRANK-RH.....		EA		1	*	*	*		*	42	
P	F		1560-326-3444	S1620-61720 <78286>	...ROD ASSEMBLY,FUSELAGE..... ATTACHING PARTS		EA		2	*	2	2		*	42	17
			5306-151-1960	AN23-8 <88044>	...BOLT,MACHINE.....		EA		1	*	*	*		*	42	18
			5310-167-0753	AN960PD10L <88044>	...WASHER,FLAT.....		HD		2	*	*	*		*	42	
			5310-285-2177	AN320-3 <88044>	...NUT,SLOTTED,HEXAGON.....		HD		1	*	*	*		*	42	
			5315-234-1856	MS24665-155 <96906>	...PIN,COTTER.....		HD		1	*	*	*		*	42	
			5306-629-1746	AN23-7 <88044>	...BOLT,CLEVIS.....		EA		1	*	*	*		*	42	19
			5310-167-0753	AN960PD10L <88044>	...WASHER,FLAT.....		HD		2	*	*	*		*	42	
			5310-285-2177	AN320-3 <88044>	...NUT,SLOTTED,HEXAGON.....		HD		1	*	*	*		*	42	
			5315-234-1856	MS24665-155 <96906>	...PIN,COTTER.....		HD		1	*	*	*		*	42	
					---*---											
X1				NAS75-3-005 <80205>	....BUSHING,SLEEVE WHEN..... EXHTD RQTN NHA 1560-326-3444		EA		1						42	
P	F		1560-566-3232	S1620-61715-13 <78286>	...LINK,NOSE DOOR..... ATTACHING PARTS		EA		1	*	*	*		*	42	20
			5306-151-1963	AN23-11 <88044>	...BOLT,CLEVIS.....		EA		1	*	*	*		*	42	21
			5310-167-0753	AN960PD10L <88044>	...WASHER,FLAT.....		HD		2	*	*	*		*	42	
			5310-285-2177	AN320-3 <88044>	...NUT,SLOTTED,HEXAGON.....		HD		1	*	*	*		*	42	
			5315-234-1856	MS24665-155 <96906>	...PIN,COTTER.....		HD		1	*	*	*		*	42	
					---*---											
P	D		1560-663-2973	S14-20-2151 <78286>	...SPRING,HELICAL,EXTENSION..		EA		1	*	REF	REF		REF	42	22
P	F		1560-326-3524	S1620-61717 <78286>	...LATCH,ENGINE..... ATTACHING PARTS		EA		1	*	2	2		*	42	23
			5306-151-1971	AN23-19 <88044>	...BOLT,CLEVIS.....		EA		1	*	*	*		*	42	24
			5310-167-0753	AN960PD10L <88044>	...WASHER,FLAT.....		HD		2	*	*	*		*	42	
			5310-285-2177	AN320-3 <88044>	...NUT,SLOTTED,HEXAGON.....		HD		1	*	*	*		*	42	
			5315-234-1856	MS24665-155 <96906>	...PIN,COTTER.....		HD		1	*	*	*		*	42	
					---*---											
MF	F			S1620-61715-15 <78286>	...BRACKET-LH..... MAKEFR AR 9535-554-1412 AL ALLY SH		EA		1						42	27
MF	F			S1620-61715-16 <78286>	...BRACKET-RH..... MAKEFR AR 9535-554-1414 AL ALLY SH		EA		1						42	
MF	F			S1620-61715-17 <78286>	...BRACKET-LH..... MAKEFR AR 9535-554-1414 AL ALLY SH		EA		1						42	29
				S1620-61715-18 <78286>	...BRACKET-RH.....		EA		1						42	
MF	F			S1620-61715-11 <78286>	...ANGLE-LH..... MAKEFR		EA		1						42	36

(1) SOURCE CODE (a)	(1) MAINT CODE (b)	(1) REC CODE (c)	(2) FEDERAL STOCK NUMBER	REFERENCE NUMBER	(3) DESCRIPTION	MODELS USABLE ON CH-34C	(4) UNIT OF ISSUE	(5) QTY INC IN UNIT PACK	(6) QTY INC IN UNIT	(7) 30-DAY DS OS MAINT ALW (a) 1-20	(b) 21-50	(c) 51-100	(8) QTY REQD PER 100 EQUIP CNTGCY	(9) DEPOT MAINT ALW PER 100 EQUIP	(10) ILLUSTRATION (a) FIG NO	(b) ITEM NO
					CONTINUED										42	36
					AR 9535-554-1412 AL ALLY SH											
MF	F			S1620-61715-12	<78286> ...ANGLE-RH.....		EA		1						42	
MF	F			S1620-61715-28	<78286> ...PLATE.....		EA		1						42	37
					MAKEFR											
					AR 9535-167-2280 AL ALLY SH											
					ATTACHING PARTS											
P	F		5320-167-4944	P4D	<29666> ...RIVET,BLIND.....		EA		1	*	*	*		*	42	38
P	F		5320-239-1286	P4F	<29666> ...RIVET,BLIND.....		EA		1	*	*	*		*	42	39
			5320-167-4945	P4E	<29666> ...RIVET,BLIND.....		EA		2	*	*	*			42	40
			5320-167-4950	P4C	<29666> ...RIVET,BLIND.....		EA		7	*	*	*			42	41
					---*---											
MF	F			S1620-61715-1	<78286> ...BRACKET,DOOR,FUSELAGE.....		EA		1						42	42
					MAKEFR											
					AR 9535-554-1415 AL ALLY SH											
MF	F			S1620-61715-26	<78286> ...CLIP.....		EA		1						42	44
					MAKEFR											
					AR 9535-554-1414 AL ALLY SH											
MF	F			S1620-61715-25	<78286> ...CLIP.....		EA		1						42	46
					MAKEFR											
					AR 9535-167-2280 AL ALLY SH											
				S1620-61027-1	<78286> ..GRILLE INSTALLATION-LH.....				1						42	
				S1620-61027-2	<78286> ..GRILLE INSTALLATION-RH.....				1						42	
			1560-563-9849	S1620-61027-3	<78286> ...GRILLE ASSEMBLY,NOSE.....										42	
					DOOR-LH RPL-BY											
					1560-956-2945											
P	F		1560-956-2945	S1620-61027-9	<78286> ...SCREEN,NOSE DOOR-LH.....		EA		1	*	*	2		*	42	48
					RPLS-- 1560-563-9849											
			1560-563-9850	S1620-61027-4	<78286> ...GRILLE ASSEMBLY,NOSE.....										42	
					DOOR-RH RPL-BY											
					1560-981-1297											
P	F		1560-981-1297	S1620-61027-10	<78286> ...SCREEN,NOSE DOOR,SKIN.....		EA		1	*	*	*		*	42	
					INSTALLATION RPLS--											
					1560-563-9850											
					ATTACHING PARTS											
			5305-281-8527	AN525-832R8	<88044> ...SCREW,MACHINE.....		HD		10	*	*	*		*	42	49
P	F		5305-546-6930	559	<61864> ...SCREW,MACHINE.....		EA		6	*	*	*		*	42	
			5310-184-8966	AN960PD8	<88044> ...WASHER,FLAT.....		HD		16	*	*	*		*	42	
			5310-811-3494	MS21044N08	<96906> ...NUT,SELF-LOCKING,HEXAGON..		EA		16	*	*	*		*	42	
					---*---											
				S1620-64082-1	<78286> ..WEDJIT INSTALLATION-LH.....				1						42	
				S1620-64082-2	<78286> ..WEDJIT INSTALLATION-RH.....				1						42	
X2	F			295310	<76530> ...WEDJIT ASSEMBLY.....		EA		1						42	50
P	F		1560-326-3441	S1620-61708-1	<78286> ..HINGE,HALF,ENGINE.....		EA		1	2	2	4		*	42	52
					COMPARTMENT DOOR-LH											
P	F		1560-326-3442	S1620-61708-2	<78286> ..HINGE,HALF,ENGINE.....		EA		1	2	2	4		*	42	
					COMPARTMENT DOOR-RH											
					ATTACHING PARTS											
			5305-719-5403	MS24694S54	<96906> ..SCREW,MACHINE.....		HD		4	*	*	*		*	42	53
			5310-167-0753	AN960PD10L	<88044> ..WASHER,FLAT.....		HD		4	*	*	*		*	42	
			5310-877-5797	MS21044N3	<96906> ..NUT,SELF-LOCKING,HEXAGON...		EA		4	*	*	*		*	42	
					---*---											

(1) SOURCE, MAINT AND REC CODE (a) SOURCE CODE	(b) MAINT LEVEL	(c) REC CODE	(2) FEDERAL STOCK NUMBER	REFERENCE NUMBER		(3) DESCRIPTION	MODELS USABLE ON CH-34C	(4) UNIT OF ISSUE	(5) QTY INC IN UNIT PACK	(6) QTY INC IN UNIT	(7) 30-DAY DS/GS MAINT ALW (a) 1-20	(b) 21-50	(c) 51-100	(8) 1-YR ALW PER 100 EQUIP CNTGCY	(9) DEPOT MAINT ALW PER 100 EQUIP	(10) ILLUSTRATION (a) FIG NO	(b) ITEM NO
P	F		1560-326-3439	S1620-61707-1	<78286>	..HINGE,HALF,ENGINE..... COMPARTMENT DOOR-LH		EA		1	*	2	2		*	42	54
P	F		1560-326-3440	S1620-61707-2	<78286>	..HINGE,HALF,ENGINE..... COMPARTMENT DOOR-RH		EA		1	2	2	3		*	42	
			1560-326-3440	HR1012	<13020>	ADDED PART NO.FOR ABOVE ITEM. ATTACHING PARTS		EA			REF	REF	REF			42	
			5305-719-5403	MS24694S54	<96906>	..SCREW,MACHINE.....		HD		4	*	*	*		*	42	55
			5310-167-0753	AN960PD10L	<88044>	..WASHER,FLAT.....		HD		4	*	*	*		*	42	
			5310-877-5797	MS21044N3	<96906>	..NUT,SELF-LOCKING,HEXAGON... ---*---		EA		4	*	*	*		*	42	
MF	F			S1620-61702-25	<78286>	..RETAINER-RH..... MAKEFR AR 9535-557-1414 AL ALLY SH		EA		1						42	
P	O		9320-554-9387	A1-4318-1	<71643>	..RUBBER,SPECIAL SHAPED SEAL.		EA		AR	*	*	*		*	42	68
				S1620-61701-3	<78286>	..SKIN INSTALLATION-OUTER LH.				1						42	
				S1620-64087-2	<78286>	..SKIN INSTALLATION-OUTER LH.				1						42	
				S1620-64087-11	<78286>	..SKIN INSTALLATION-OUTER LH.				1						42	
				S1620-61702-3	<78286>	..SKIN INSTALLATION-OUTER RH.				1						42	
				S1620-64088-3	<78286>	..SKIN INSTALLATION-OUTER RH.				1						42	
				S1620-64088-15	<78286>	..SKIN INSTALLATION-OUTER RH.				1						42	
X2	F			S1620-61701-8	<78286>	...SKIN-OUTER LH.....		EA		1						42	77
X2	F			S1620-61702-8	<78286>	...SKIN-OUTER LH..... ATTACHING PARTS		EA		1						42	
X2	F			S1620-61701-7	<78286>	...SKIN-OUTER LH.....		EA		1						42	79
X2	F			S1620-61702-7	<78286>	...SKIN-OUTER RH..... ATTACHING PARTS		EA		1						42	
				S1620-61701-2	<78286>	..SKIN INSTALLATION-INNER LH.				1						42	
				S1620-64087-3	<78286>	..SKIN INSTALLATION-INNER LH.				1						42	
				S1620-64087-12	<78286>	..SKIN INSTALLATION-INNER LH.				1						42	
				S1620-61702-2	<78286>	..SKIN INSTALLATION-INNER RH.				1						42	
				S1620-64088-2	<78286>	..SKIN INSTALLATION-INNER RH.				1						42	
				S1620-61713-25	<78286>	..SKIN INSTALLATION-INNER RH.				1						42	
X2	F		1560-948-0437	S1620-61711-73	<78286>	...FRAME-LH.....		EA		1	*	*	*		*	42	
		R	1560-633-6121	S1620-65223-9	<78286>	WINDOW ASSEMBLY,COCKPIT..... LH OBS-BY 1560-918-0690										43	
P	O	R	1560-918-0690	S1620-65223-53	<78286>	WINDOW ASSEMBLY,SLIDING,..... FORWARD FUSELAGE RPLS-- 1560-575-2053, 1560-633-6121 OBSLTS 1560-327-3864, 1560-340-1358, 1560-569-6536,& 1560-626-7163 USE-AFT- CMPL-W MW055-1520-202-34/27 SEE FIG.41 FOR NHA		EA			*	REF	REF			43	

(1) SOURCE, MAINT AND REC CODE (a) SOURCE CODE	(b) MAINT LEVEL	(c) REC CODE	(2) FEDERAL STOCK NUMBER	(3) DESCRIPTION REFERENCE NUMBER			MODELS USABLE ON CH-34C	(4) UNIT OF ISSUE	(5) QTY INC IN UNIT PACK	(6) QTY INC IN UNIT	(7) 30-DAY DS GS MAINT ALW (a) 1-20	(b) 21-50	(c) 51-100	(8) 1-YR ALW PER 100 EQUIP CNTGCY	(9) DEPOT MAINT ALW PER 100 EQUIP	(10) ILLUSTRATION (a) FIG NO	(b) ITEM NO
		R	1560-633-6120	S1620-65223-10	<78286>	WINDOW ASSEMBLY,COCKPIT RH... OBS-AFT-CMPL-W MWO 55-1520-202-34/27		EA								43	
P	O	R	1560-918-0689	S1620-65223-54	<78286>	WINDOW ASSEMBY,SLIDING..... FORWARD FUSELAGE RPLS-- 1560-633-6120 USE-AFT-COMP-W MWO 55-1520-202-34/27 SEE FIG. 41 FOR NHA		EA		1	*	*	*		*	43	
				S1620-65204-1	<78286>	.LOCK INSTALLATION-SLIDING... WINDOW-LH				1						43	
				S1620-65204-2	<78286>	.LOCK INSTALLATION-SLIDING... WINDOW-RH				1						43	
AF	F			S1620-65204-3	<78286>	..CAM AND LOCK ASSEMBLY-LH...		EA		1						43	1
AF	F			S1620-65204-4	<78286>	..CAM AND LOCK ASSEMBLY-RH... ATTACHING PARTS		EA		1						43	
			5310-184-8966	AN960PD8	<88044>	..WASHER,FLAT.....		HD		2	*	*	*		*	43	
			5305-844-3572	AN525D832R8	<88044>	..SCREW,MACHINE.....		EA		1	*	*	*		*	43	
			5310-184-8966	AN960PD8	<88044>	..WASHER,FLAT.....		HD		2	*	*	*		*	43	3
X2	F		1560-614-4740	S1620-65204-11	<78286>	..SPACER,COCKPIT CANOPY..... ---*---		EA		1	*	*	*		*	43	4
P	F		1560-864-3475	134AV10528-7	<26512>	...CABLE ASSEMBLY.....		EA		1	*	*	*		*	43	
P	F		1560-560-5355	S1620-65204-6	<78286>	...CABLE ASSEMBLY,COCKPIT.... CANOPY ATTACHING PARTS		EA		1	*	*	*		*	43	5
			5315-080-0170	MS20392-2C9	<96906>	...PIN,STRAIGHT,HEADED.....		EA		1	*	*	*		*	43	6
			5310-183-4406	AN960PD10	<88044>	...WASHER,FLAT.....		HD		1	*	*	*		*	43	
			5315-234-1856	MS24665-155	<96906>	...PIN,COTTER..... ---*---		HD		1	*	*	*		*	43	
P	F		1560-560-5353	S1620-65204-10	<78286>	...CAM,COCKPIT CANOPY..... SLIDING ATTACHING PARTS		EA		1	*	*	*		*	43	7
			5315-080-0170	MS20392-2C9	<96906>	...PIN,STRAIGHT,HEADED.....		EA		1	*	*	*		*	43	8
			5310-167-0753	AN960PD10L	<88044>	...WASHER,FLAT.....		HD		2	*	*	*		*	43	
			5315-234-1856	MS24665-155	<96906>	...PIN,COTTER..... ---*---		HD		1	*	*	*		*	43	
P	F		1560-560-5354	S1620-65204-5	<78286>	...LOCK ASSEMBLY,COCKPIT..... CANOPY		EA		1	*	2	2		*	43	9
			1560-560-5354	505450	<02106>	ADDED PART NO.FOR ABOVE ITEM.		EA			*	REF	REF			43	9
			5315-882-1438	MS16562-193	<96906>	....PIN,SPRING.....		EA		1	*	*	*		*	43	10
X1				S1620-65204-8	<78286>	....PIN WHEN EXHTD RQTN..... NHA 1560-560-5354		EA		1						43	12
P	F		1560-563-9882	S1620-65205	<78286>	....SPRING,HELICAL..... COMPRESSION		EA		1	*	*	*		*	43	13
				S1620-66489-1	<78286>	.LATCH INSTALLATION-SLIDING.. WINDOW-LH				1						43	
				S1620-66489-2	<78286>	.LATCH INSTALLATION-SLIDING.. WINDOW-RH				1						43	
P	O		1560-654-8873	S1620-65201-5	<78286>	..HANDLE..... ATTACHING PARTS		EA		1	*	2	2		*	43	14
			5315-826-3251	MS16562-223	<96906>	..PIN,SPRING..... ---*---		EA		1	*	*	*		*	43	15

(1) SOURCE MAIN AND REC CODE (a)	(b)	(c)	(2) FEDERAL STOCK NUMBER	REFERENCE NUMBER		(3) DESCRIPTION	MODELS USABLE ON CH-34C	(4) UNIT OF ISSUE	(5) QTY INC IN UNIT PACK	(6) QTY INC IN UNIT	(7) 30-DAY DS GS MAINT ALW (a) 1-20	(b) 21-50	(c) 51-100	(8) 1-YR ALW PER 100 EQUIP CNTGCY	(9) DEPOT MAINT ALW PER 100 EQUIP	(10) ILLUSTRATION (a) FIG NO	(b) ITEM NO
			5310-187-2354	AN960PD416	<88044>	..WASHER,FLAT.....		HD		1	*	*	*		*	43	17
			1560-563-9880	S1620-65201-3	<78286>	..LATCH ASSEMBLY-LH RPL-BY.. 1560-625-4518										43	
P	F		1560-625-4518	S1620-66489-3	<78286>	..LATCH ASSEMBLY-LH RPLS--.. 1560-563-9880		EA		1	*	*	2		*	43	20
			1560-524-5137	S1620-65201-4	<78286>	..LATCH ASSEMBLY-RH RPL-BY.. 1560-625-4519										43	
P	F		1560-625-4519	S1620-66489-4	<78286>	..LATCH ASSEMBLY-RH RPLS--.. 1560-524-5137 ATTACHING PARTS		EA		1	*	*	*		*	43	
			5315-881-2253	MS171526	<96906>	..PIN,SPRING..... ---*---		EA		1	*	*	*		*	43	21
P	F		1560-563-9883	S1620-65210-1	<78286>	..SPRING,HELICAL TORSION.....		EA		1	*	2	2		*	43	22
P	F		1560-563-9884	S1620-65210-2	<78286>	..SPRING,HELICAL TORSION..... RPLS-- 1560-336-2531		EA		1	2	2	3		*	43	
			5310-167-0804	AN960C616	<88044>	..WASHER,FLAT.....		HD		1	*	*	*		*	43	23
X2	F		1560-560-5352	S1620-65201-11	<78286>	..SHAFT,COCKPIT SLIDING..... WINDOW CANOPY		EA		1	*	2	2		*	43	24
			5315-080-0170	MS20392-2C9	<96906>	..PIN,STRAIGHT,HEADED.....		EA		1	*	*	*		*	43	25
			5310-167-0812	AN960C10L	<89044>	..WASHER,FLAT.....		HD		1	*	*	*		*	43	
			5315-234-1856	MS24665-153	<96906>	..PIN,COTTER.....		HD		1	*	*	*		*	43	
X2	F		1560-563-9879	S1620-65201-13	<78286>	..LEVER,SLIDING,WINDOW.....		EA		1	*	*	*		*	43	26
MF	F			S1620-65201-14	<78286>	..RUBBING STRIP..... MAKEFR AR 8135-634-2946 TAPE		EA		1						43	27
P	F		1560-654-8872	S1620-65201-12	<78286>	..PIN,COCKPIT CANOPY..... SLIDING WINDOW		EA		1	*	*	*		*	43	28
			5310-184-9001	AN960PD416L	<88044>	..WASHER,FLAT.....		HD		1	*	*	*		*	43	
			5310-543-4443	MS20364-428A	<96906>	..NUT,SELF-LOCKING,HEXAGON...		HD		1	*	*	*		*	43	
P	F		1560-676-3429	S1620-65112-13	<78286>	.RETAINER-SLIDING WINDOW-LH..		EA		1	*	*	*		*	43	29
P	F		1560-623-1411	S1620-65221-21	<78286>	.FITTING ASSEMBLY-LH.....		EA		1	*	*	*		*	43	35
X2	F		1560-620-6929	S1620-65221-1	<78286>	.FITTING ASSEMBLY-RH.....		EA		1	*	*	*		*	43	
P	F		1560-623-1336	S1620-65221-23	<78286>	.FITTING ASSEMBLY,SLIDING.... WINDOW OBSLTS 1560-620-6931		EA		1	*	*	2		*	43	41
X2	F			S1620-65219-1	<78286>	.RETAINER.....		EA		1						43	47
X2	F		1560-675-3285	S1620-65112-17	<78286>	.RETAINER-LH.....		EA		1	*	*	*		*	43	49
X2	F			S1620-65112-14	<78286>	.RETAINER,SLIDING WINDOW.....		EA		1						43	
			1560-654-8867	S1620-65112-11	<78286>	.RETAINER,SLIDING WINDOW..... RPL-BY 1560-654-8868				1						43	
P	F		1560-654-8868	S1620-65112-15	<78286>	.RETAINER,SLIDING WINDOW..... RPLS-- 1560-654-8867		EA		1	*	*	*		*	43	52
P	F		1560-766-2014	S1620-65112-12	<78286>	.RETAINER,WINDOW..... ATTACHING PARTS		EA		1	*	*	*		*	43	
			5305-655-5849	NK525D10-8	<02615>	.SCREW.....		EA		19	*	2	2			43	53
			5310-167-0753	AN960PD10L	<88044>	.WASHER,FLAT.....		HD		19	*	*	*		*	43	
			5310-184-8966	AN960PD8	<88044>	.WASHER,FLAT..... ---*---		HD		1	*	*	*		*	43	
			1560-651-4153	S1620-65112-9	<78286>	.RETAINER,SLIDING WINDOW.....		EA		1	*	*	*			43	54
X2	F		1560-651-4155	S1620-65113-9	<78286>	.PLATE,SLIDING WINDOW.....		EA		1	*	*	*		*	43	61

(1) SOURCE, MAINT AND REC CODE (a) SOURCE CODE	(b) MAINT LEVEL	(c) REC CODE	(2) FEDERAL STOCK NUMBER	REFERENCE NUMBER		(3) DESCRIPTION	MODELS USABLE ON CH-34C	(4) UNIT OF ISSUE	(5) QTY INC IN UNIT PACK	(6) QTY INC IN UNIT	(7) 30-DAY DS/GS MAINT ALW (a) 1-20	(b) 21-50	(c) 51-100	(8) 1-YR ALW PER 100 EQUIP CNTGCY	(9) DEPOT MAINT ALW PER 100 EQUIP	(10) ILLUSTRATION (a) FIG NO	(b) ITEM NO
P	F		1560-711-4590	S1620-65223-13	<78286>	.STRIP,COCKPIT CANOPY.....		EA		1	*	*	*		*	43	62
P	F		1560-653-5887	S1650-62304	<78286>	.STUD ASSEMBLY.....		EA		3	*	*	*		*	43	63
			5310-184-8966	AN960PD8	<88044>	.WASHER,FLAT.....		HD		4	*	*	*		*	43	
			5310-060-2039	MS21044D08	<96906>	.NUT,SELF-LOCKING,HEXAGON....		EA		2	*	*	*		*	43	
						---*---											
P	F		5325-174-2923	AN227-8	<88044>	..STUD,FASTENER.....		EA		1					REF	43	66
			5325-290-5933	AN227-8B9B	<88044>	..FASTENER,SNAP.....		EA		1	*	*	*		*	43	67
			5340-698-3435	NAS43DD3-20	<80205>	.SPACER,SLEEVE.....		EA		6	*	*	*		*	43	68
X2	F		1560-651-4160	S1620-65114-5	<78286>	.RETAINER,SLIDING WINDOW..... ATTACHING PARTS		EA		1	*	*	*		*	43	69
			5305-639-4812	AN525D832R10	<88044>	.SCREW,MACHINE.....		EA		6	*	*	*		*	43	70
			5310-184-8966	AN960PD8	<88044>	.WASHER,FLAT.....		HD		18	*	*	*		*	43	
			5310-060-2039	MS21044D08	<96906>	.NUT,SELF-LOCKING,HEXAGON....		EA		6	*	*	*		*	43	
						---*---											
P	F		1560-613-3019	S1620-65180-1	<78286>	.PANEL,WINDOW,COCKPIT..... RPLS-- 1560-301-3551, 1560-301-3552,& 1560-336-0783 1560-336-0783		EA		1	*	2	2		*	43	71
MF	O			S1620-65106-10	<78286>	.RUBBER EDGING..... MAKEFR AR 9320-241-9742 RBR SH,SLD		EA		AR						43	72
X2	F			S1620-65113-1	<78286>	.RETAINER,SLIDING WINDOW.....		EA		1						43	73
X2	F		1560-654-8871	S1620-65113-13	<78286>	.RETAINER,WINDOW-RH.....		EA		1	*	*	*		*	43	74
			5310-877-5796	MS21044N4	<96906>	..NUT,SELF-LOCKING.....		EA		2	*	*	*		*	43	74A
			5310-961-8433	NAS1252-416L	<80205>	..WASHER,FLAT.....		EA		4	*	*	*		*	43	74B
P	F		5305-912-9206	S1620-61802-16	<78286>	..SCREW,SHOULDER.....		EA		2	*	*	*		*	43	74C
P	F		1560-909-7441	S1620-61802-15	<78286>	..BRACKET,SLIDING WINDOW.....		EA		2	*	*	*		*	43	74D
P	F		1560-904-5117	S162061802-18	<78286>	..SPACER,PLATE.....		EA		2	*	*	*		*	43	74E
P	F		1560-905-5114	S1620-61802-17	<78286>	..BRACKET ANGLE.....		EA		2	*	*	*		*	43	74F
P	F		1560-904-5111	S1620-61802-19	<78286>	..SPACER,PLATE.....		EA		1	*	*	*		*	43	
P	F		5340-909-8729	E240-026-175	<92830>	..SPRING,WINDOW.....		EA		2	*	*	*		*	43	74G
			5305-717-5592	MS24693C275	<96906>	..SCREW,MACHINE.....		EA		1	*	*	*		*	43	
			5310-764-7272	MS21047-3	<96906>	..NUT,SELF-LOCKING.....		EA		1	*	*	*		*	43	
P	F		5320-264-4247	MS20426B3-9	<96906>	..RIVET,SOLID.....		LB		1	*	*	*		*	43	
				S1620-61802-12	<78286>	..BLOCK,GUIDE WINDOW-LH.....		EA		1						43	
X2	F		1560-654-8870	S1620-65113-11	<78286>	.RETAINER,WINDOW.....		EA		1	*	2	2		*	43	75
X2	F		1560-651-4154	S1620-65113-3	<78286>	.RETAINER ASSEMBLY,SLIDING... WINDOW-RH		EA		1	*	*	*		*	43	76
AF	F			S1620-65115-1	<78286>	.STRIP ASSEMBLY,SLIDING.....		EA		1						43	77
MF	F			S1620-65115-3	<78286>	..RETAINER,SLIDING WINDOW.... MAKEFR AR 9535-554-1412 AL ALLY SH		EA		1						43	79
MF	F			S1620-65115-5	<78286>	..RUBBER STRIP..... MAKEFR AR 9330-290-3461 PLASTIC SH		EA		1						43	80
P	F		1560-654-8860	S1620-65095-1	<78286>	.WELD ASSEMBLY,SLIDING..... WINDOW RPLS-- 1560-654-8875, 1560-654-8876		EA		1	*	*	*		*	43	82
X2	F		1560-869-0699	S1620-65095-2	<78286>	.SUPPORT,WELD ASSEMBLY.....		EA		1	*	*	*		*	43	
P	O		1560-677-9838	S1620-65095-6	<78286>	..PIN,COCKPIT CANOPY,.....		EA		4	*	*	*		*	43	84

(1) SOURCE, MAINT AND REC CODE (a) SOURCE CODE	(b) MAINT LEVEL	(c) REC LEVEL	(2) FEDERAL STOCK NUMBER	REFERENCE NUMBER		(3) DESCRIPTION	MODELS USABLE ON CH-34C	(4) UNIT OF ISSUE	(5) QTY INC IN UNIT PACK	(6) QTY INC IN UNIT	(7) 30-DAY DS/GS MAINT ALW (a) 1-20	(b) 21-50	(c) 51-100	(8) 1-YR ALW PER 100 EQUIP CNTGCY	(9) DEPOT MAINT ALW PER 100 EQUIP	(10) ILLUSTRATION (a) FIG NO	(b) ITEM NO
						CONTINUED										43	84
						SLIDING WINDOW ATTACHING PARTS											
			5310-087-7493	MS27183-13	<96906>	..WASHER,FLAT.....		HD		4	*	*	*		*	43	85
			5310-660-3381	MS21083N5	<96906>	..NUT,SELF-LOCKING,HEXAGON...				4	*	*	*		*	43	
						---*---											
P	O		1560-701-0561	S1620-65093	<78286>	..PIN,COCKPIT CANOPY.....		EA		2	*	*	2		*	43	86
						SLIDING WINDOW ATTACHING PARTS											
			5310-167-0753	AN960PD10L	<88044>	..WASHER,FLAT.....		HD		1	*	*	*		*	43	87
			5310-807-1467	MS21042-3	<96906>	..NUT,EXTENDED WASHER.....				1	*	*	*		*	43	
						---*---											
P	F		1560-570-0626	S1620-65194	<78286>	.CLIP,SPRING,SLIDING WINDOW..		EA		3	*	2	2		*	43	89
X2	F			S1620-65220-7	<78286>	.SEALER ASSEMBLY-LH.....		EA		1						43	92
X2	F		1560-675-3284	S1620-65110-8	<78286>	.FRAME ASSEMBLY.....		EA		1	*	*	*		*	43	
X2	F			S1620-65110-5	<78286>	.FRAME ASSEMBLY.....		EA		1						43	93
X2	F		1560-632-4427	S1620-65110-7	<78286>	.WINDOW FRAME ASSEMBLY.....		EA		1	*	*	*		*	43	
X2	F		1560-675-3284	S1620-65110-8	<78286>	.WINDOW FRAME ASSEMBLY.....		EA		1	*	*	*		*	43	
P	F		1560-651-4156	S1620-65114-1	<78286>	.RETAINER,SLIDING WINDOW.....		EA		1	*	*	*		*	43	94
X2	F		1560-651-4157	S1620-65114-2	<78286>	.RETAINER,SLIDING WINDOW.....		EA		1	*	*	*		*	43	
X2	F		1560-651-4158	S1620-65114-3	<78286>	.RETAINER,SLIDING WINDOW.....		EA		1	*	*	*		*	43	
X2	F		1560-651-4159	S1620-65114-4	<78286>	.RETAINER,SLIDING WINDOW.....		EA		1	*	*	*		*	43	
P	F		1560-094-7544	S1620-65104-14	<78286>	.SLIDE ASSEMBLY,CANOPY..... FORWARD		EA		1	*	*	2		*	43	96
P	F		1560-094-7546	S1620-65104-15	<78286>	.SLIDE-RH.....		EA		1	*	*	*		*	43	
P	F		1560-509-0491	S1620-65104-18	<78286>	.SPRING,SILENCER,SLIDE.....		EA		8	*	*	2		*	43	
MF	F			S1620-65106-13	<78286>	.PAD,COCKPIT CANOPY..... MAKEFR AR 9320-291-0416 RBR SH,SLD		EA		1						43	97
MF	F			S1620-65106-14	<78286>	.PAD,COCKPIT CANOPY..... MAKEFR AR 9320-291-0416 RBR SH,SLD		EA		1						43	98
P	F		1560-623-1336	S1620-65221-23	<78286>	.FITTING ASSEMBLY,SLIDING.... WINDOW OBSLTS 1560-620-6931		EA		1	*	*	REF		REF	43	
				S1620-65000-2	<78286>	COCKPIT CANOPY INSTALLATION.. SEE FIG.41 FOR NHA										44	
P	F		1560-657-2924	S1620-65152-1	<78286>	.SKIN ASSEMBLY,CANOPY,FAIRING		EA		1	*	*	*		*	44	1
P	F		1560-672-3539	S1620-65152-2	<78286>	.SKIN ASSEMBLY,CANOPY..... ATTACHING PARTS		EA		1	*	*	2		*	44	
			5305-286-0213	AN525-832R10	<88044>	.SCREW,MACHINE.....		HD		7	*	*	*		*	44	2
			5310-184-8966	AN960PD8	<88044>	.WASHER,FLAT.....		HD		7	*	*	*		*	44	
						---*---											
P	F		5325-276-4969	550A	<61864>	..POST,SNAP.....		EA		8	*	*	*		*	44	3
P	F		5325-174-2923	AN227-8	<88044>	..STUD.....		EA		8	*	*	*		REF	44	4
P	F		5325-290-8028	4002-4	<71286>	..STUD ASSEMBLY,TURNLOCK.....		EA		10	*	*	*		*	44	5

(1) SOURCE, MAINT AND REC CODE (a) SOURCE CODE	(b) MAINT LEVEL	(c) REC CODE	(2) FEDERAL STOCK NUMBER	REFERENCE NUMBER		(3) DESCRIPTION	MODELS USABLE ON CH-34C	(4) UNIT OF ISSUE	(5) QTY INC IN UNIT PACK	(6) QTY INC IN UNIT	(7) 30-DAY DS/GS MAINT ALW (a) 1-20	(b) 21-50	(c) 51-100	(8) 1-YR ALW PER 100 EQUIP CNTGCY	(9) DEPOT MAINT ALW PER 100 EQUIP	(10) ILLUSTRATION (a) FIG NO	(b) ITEM NO
						CONTINUED										44	5
						FASTENER											
P	F		5325-282-2045	4002N	<71286>	..EYELET,TURNLOCK FASTENER...		EA		10	*	*	*		*	44	6
P	F		5325-290-8232	4002-6	<71286>	..STUD,ASSEMBLY,TURNLOCK.....		EA		1	*	*	*		*	44	7
						FASTENER											
P	F		5325-282-2045	4002N	<71286>	..EYELET,TURNLOCK FASTENER...		EA		1	*	*	*		REF	44	8
P	F		5325-290-8235	4002-5	<71286>	..STUD ASSEMBLY,TURNLOCK.....		EA		4	*	*	*		*	44	9
						FASTENER											
P	F		5325-282-2045	4002N	<71286>	..EYELET,TURNLOCK FASTENER...		EA		4	*	*	*		REF	44	10
P	F		5325-290-8233	4002-7	<71286>	..STUD ASSEMBLY,TURNLOCK.....		EA		1	*	*	*		*	44	11
						FASTENER											
P	F		5325-282-2045	4002N	<71286>	..EYELET,TURNLOCK FASTENER...		EA		1	*	*	*		REF	44	12
P	F		5325-290-8232	4002-6	<71286>	..STUD ASSEMBLY,TURNLOCK.....		EA		7	*	*	*		REF	44	13
						FASTENER											
P	F		5325-282-2045	4002N	<71286>	..EYELET,TURNLOCK FASTENER...		EA		7	*	*	*		REF	44	14
				S1620-65157	<78286>	.SKIN INSTALLATION-CANOPY....				1						44	
						FAIRING											
P	F		1560-560-5351	S1620-65157-7	<78286>	..BEAM ASSEMBLY,CANOPY.....		EA		1	*	2	2		*	44	15
						RPLS-- 1560-327-3831											
						ATTACHING PARTS											
			5305-286-0213	AN525-832R10	<88044>	..SCREW,MACHINE.....		HD		2	*	*	*		*	44	16
			5305-584-8279	AN525D832R6	<88044>	..SCREW,MACHINE.....		EA		37	*	*	*		*	44	17
			5305-180-0010	AN525-10R8	<88044>	..SCREW,MACHINE.....		HD		30	*	*	*		*	44	18
						---*---											
X2	F		1560-570-0617	S1620-65157-1	<78286>	..BEAM ASSEMBLY,CANOPY.....		EA		1	*	*	*		*	44	19A
						FAIRING											
						ATTACHING PARTS											
			5305-584-8279	AN525D832R6	<88044>	..SCREW,MACHINE.....		EA		6	*	*	*		*	44	19B
						---*---											
X2	F			S1620-65128-1	<78286>	..BULKHEAD ASSEMBLY.....		EA		1						44	19C
						ATTACHING PARTS											
			5305-286-0213	AN525-1032R10	<88044>	..SCREW,MACHINE.....		HD		15	*	*	*		*	44	19D
			5310-184-8966	AN960PD8	<88044>	..WASHER.....		HD		1	*	*	*		*	44	
						---*---											
X2	F		1560-766-2015	S1620-61993-1	<78286>	..BULKHEAD ASSEMBLY.....		EA		1	*	*	*		*	44	
				S1620-65145	<78286>	.SCREEN INSTALLATION.....				1						44	
P	F		1560-671-5883	S1620-65145-31	<78286>	..CAP STRIP,CANOPY FAIRING...		EA		1	*	*	*		*	44	20
						ATTACHING PARTS											
			5305-286-0213	AN525-832R10	<88044>	..SCREW,MACHINE.....		HD		8	*	*	*		*	44	21
						---*---											
P	F		1560-675-5769	S1620-65145-32	<78286>	..STRIP,CANOPY FAIRING.....		EA		1	*	*	2		*	44	22
						ATTACHING PARTS											
			5305-286-0213	AN525-832R10	<88044>	..SCREW,MACHINE.....		HD		6	*	*	*		*	44	23
						---*---											
P	F		1560-675-5770	S1620-65145-33	<78286>	..STRIP,CANOPY FAIRING.....		EA		1	*	*	*		*	44	24
						ATTACHING PARTS											
			5305-286-0213	AN525-832R10	<88044>	..SCREW,MACHINE.....		HD		6	*	*	*		*	44	25
						---*---											
			1560-563-9869	S1620-65145-38	<78286>	..SCREEN ASSEMBLY,CANOPY.....										44	
						FAIRING RPL-BY											
						1560-981-8733											
P	O		1560-981-8733	S1620-65145-86	<78286>	..SCREEN,CANOPY.....		EA		1	2	3	5		*	44	26

(1) SOURCE, MAINT AND REC CODE (a) SOURCE CODE	(b) MAINT LEVEL	(c) REC CODE	(2) FEDERAL STOCK NUMBER	REFERENCE NUMBER		(3) DESCRIPTION	MODELS USABLE ON CH-34C	(4) UNIT OF ISSUE	(5) QTY INC IN UNIT PACK	(6) QTY INC IN UNIT	(7) 30-DAY DS GS MAINT ALW (a) 1-20	(b) 21-50	(c) 51-100	(8) 1-YR ALW PER 100 EQUIP CNTGCY	(9) DEPOT MAINT ALW PER 100 EQUIP	(10) ILLUSTRATION (a) FIG NO	(b) ITEM NO
						CONTINUED										44	26
						INSTALLATION,FORWARD FUSELAGE RPLS-- 1560-563-9869											
						ATTACHING PARTS											
			5305-286-0213	AN525-832R10	<88044>	..SCREW,MACHINE.....		HD		16	*	*	*		*	44	27
						---*---											
			1560-563-9870	S1620-65145-39	<78286>	..SCREEN ASSEMBLY.....		EA								44	
						RPL-BY 1560-991-0815											
P	O		1560-991-0815	S1620-65145-82	<78286>	..SCREEN ASSEMBLY.....		EA		1	*	*	*		*	44	28
						RPLS--1560-563-9870											
			5305-286-0213	AN525-832R10	<88044>	..SCREW,MACHINE.....		HD		9	*	*	*		*	44	29
						---*---											
			1560-563-9871	S1620-65145-40	<78286>	..SCREEN ASSEMBLY,CANOPY.....										44	
						FAIRING RPL-BY 1560-987-3314											
P	O		1560-987-3314	S1620-65145-84	<78286>	..SCREEN ASSEMBLY,CANOPY.....		EA		1	2	4	7		*	44	30
						RPLS-- 1560-563-9871											
						ATTACHING PARTS											
			5305-286-0213	AN525-832R10	<88044>	..SCREW,MACHINE.....		HD		6	*	*	*		*	44	31
						---*---											
P	F		1560-326-3429	S1620-65144	<78286>	.HANDLE,FUSELAGE SECTION.....		EA		1	*	*	*		*	44	
X2	F		1560-654-3164	S1620-65144-15	<78286>	..FAIRING ASSEMBLY,CANOPY....		EA		1	*	*	*		*	44	32
						ATTACHING PARTS											
			5305-180-0010	AN525-10R8	<88044>	..SCREW,MACHINE.....		HD		6	*	*	*		*	44	33
			5305-180-0004	AN525-8R8	<88044>	..SCREW,MACHINE.....		HD		4					*	44	34
						---*---											
X1				S1620-65144-11	<78286>	...BRACKET,CANOPY FAIRING....		EA		1						44	
X1				S1620-65144-7	<78286>	....SKIN,CANOPY FAIRING.....		EA		1						44	
X1				S1620-65144-8	<78286>	....SUPPORT,CANOPY FAIRING...		EA		2						44	
X2	F		1560-771-5664	S1620-65149-1	<78286>	.FRAME ASSEMBLY.....		EA		1	*	*	*		*	44	36
						ATTACHING PARTS											
			5305-180-0010	AN525-10R8	<88044>	.SCREW,MACHINE.....		HD		8	*	*	*		*	44	37
			5310-167-0753	AN960PD10L	<88044>	.WASHER,FLAT.....		HD		16	*	*	*		*	44	
			5310-877-5797	MS21044N3	<96906>	.NUT,SELF-LOCKING,HEXAGON....		EA		8	*	*	*		*	44	
						---*---											
X2	F			S1620-65149-9	<78286>	..CLIP ASSEMBLY.....		EA		1						44	38
P	F		1560-652-9240	S1620-65125-75	<78286>	.PLATFORM ASSEMBLY,CANOPY-LH.		EA		1	*	*	*		*	44	40
						RPLS-- 1560-570-4862 SEE FIG.45 FOR BREAKDOWN											
P	O	R	1560-587-2610	S1620-65186-75	<78286>	.SERVICE PLATFORM,CANOPY-RH..		EA		1	*	*	*		*	44	
						RPLS-- 1560-310-5367, 1560-570-4863 SEE FIG.45 FOR BREAKDOWN											
				XW20101S58	<70255>	.WIPER SYSTEM,WINDSHIELD,....		EA		1						44	41
						ELECTRIC SEE FIG.44A FOR BREAKDOWN											
AF	F			S1620-65168-1	<78286>	.CABLE ASSEMBLY.....		EA		2						44	42
						ATTACHING PARTS											
			5306-182-2060	AN3H7A	<88044>	.BOLT,MACHINE.....		HD		1	*	*	*		*	44	43
			5310-167-0753	AN960PD10L	<88044>	.WASHER,FLAT.....		HD		3	*	*	*		*	44	

(1) SOURCE, MAINT AND REC CODE (a) SOURCE CODE	(b) MAINT LEVEL	(c) REC CODE	(2) FEDERAL STOCK NUMBER	REFERENCE NUMBER		(3) DESCRIPTION	MODELS USABLE ON CH-34C	(4) UNIT OF ISSUE	(5) QTY INC IN UNIT PACK	(6) QTY INC IN UNIT	(7) 30-DAY DS GS MAINT ALW (a) 1-20	(b) 21-50	(c) 51-100	(8) 1-YR ALW PER 100 EQUIP CNTGCY	(9) DEPOT MAINT ALW PER 100 EQUIP	(10) ILLUSTRATION (a) FIG NO	(b) ITEM NO
			5310-183-4406	AN960PD10	<88044>	.WASHER,FLAT.....		HD		2	*	*	*		*	44	
			5310-877-5797	MS21044N3	<96906>	.NUT,SELF-LOCKING,HEXAGON....		EA		1	*	*	*		*	44	
			5306-182-2064	AN3H13A	<88044>	.BOLT,MACHINE.....		HD		1	*	*	*		*	44	44
			5310-167-0753	AN960PD10L	<88044>	.WASHER,FLAT.....		HD		2	*	*	*		*	44	
			5310-877-5797	MS21044N3	<96906>	.NUT,SELF-LOCKING,HEXAGON....		EA		1	*	*	*		*	44	
						---*---											
			5340-619-7556	AN155B32S	<88044>	..TURNBUCKLE BODY.....		EA		1	*	*	*		*	44	46
P	F		4010-631-3809	NAS304-27-0272	<80205>	..WIRE ROPE ASSEMBLY,..... SINGLE LEG		EA		1	*	*	*		*	44	47
P	F		4010-631-3827	NAS304-36-0272	<80205>	..WIRE ROPE ASSEMBLY,..... SINGLE LEG		EA		1	*	*	*		*	44	48
AF	F			S1620-65100-2	<78286>	.CANOPY ASSEMBLY,COCKPIT..... SEE FIG.46 FOR BREAKDOWN ATTACHING PARTS		EA		1						44	53
			5305-180-0012	AN525-10R10	<88044>	.SCREW,MACHINE.....		HD		8	*	*	*		*	44	54
			5310-167-0753	AN960PD10L	<88044>	.WASHER,FLAT.....		HD		16	*	*	*		*	44	
			5305-180-0010	AN525-10R8	<88044>	.SCREW,MACHINE.....		HD		4	*	*	*		*	44	55
			5310-167-0753	AN960PD10L	<88044>	.WASHER,FLAT.....		HD		4	*	*	*		*	44	
			5305-180-0012	AN525-10R10	<88044>	.SCREW,MACHINE.....		HD		4	*	*	*		*	44	56
			5310-167-0753	AN960PD10L	<88044>	.WASHER,FLAT.....		HD		8	*	*	*		*	44	
			5305-180-0012	AN525-10R10	<88044>	.SCREW,MACHINE.....		HD		11	*	*	*		*	44	57
			5310-183-4406	AN960PD10	<88044>	.WASHER,FLAT.....		HD		11	*	*	*		*	44	
			5305-206-1201	AN525-10R14	<88044>	.SCREW,MACHINE.....		HD		2	*	*	*		*	44	58
			5310-167-0753	AN960PD10L	<88044>	.WASHER,FLAT.....		HD		4	*	*	*		*	44	
			5305-180-0012	AN525-10R10	<88044>	.SCREW,MACHINE.....		HD		4	*	*	*		*	44	59
			5310-167-0753	AN960PD10L	<88044>	.WASHER,FLAT.....		HD		8	*	*	*		*	44	
						---*---											
MF	F			S1620-65126-69	<78286>	.CLIP,CANOPY FAIRING..... MAKEFR AR 9535-554-1412 AL ALLY SH		EA		1						44	
MF	F			S1620-65142-3	<78286>	.RUBBER,CANOPY FAIRING..... RETAINER MAKEFR AR 9320-241-9763 RBR SH,SLD		EA		1						44	
MF	F			S1620-65143-10	<78286>	...CLIP,CANOPY FAIRING BEAM.. MAKEFR AR 9535-554-1413 AL ALLY SH		EA		1						44	
MF	F			S1620-65143-9	<78286>	...CLIP,CANOPY FAIRING BEAM.. MAKEFR AR 9320-141-7166 RBR SH,SLD		EA		1						44	
				XW20101S58	<70255>	WIPER SYSTEM,WINDSHIELD,..... ELECTRIC SEE FIG.44 FOR NHA										44A	
P	O		1680-031-5319	W2091-2A4	<70255>	.ARM,WINDSHIELD WIPER.....		EA		1	*	2	2		*	44A	
				V20111	<70255>	..SCREW,ADJUSTMENT.....		EA		1						44A	1
				V21090	<70255>	..NUT,ADJUSTMENT.....		EA		1						44A	2

(1) SOURCE, MAINT AND REC CODE (a) SOURCE CODE	(b) MAINT LEVEL	(c) REC CODE	(2) FEDERAL STOCK NUMBER	REFERENCE NUMBER		(3) DESCRIPTION	MODELS USABLE ON CH-34C	(4) UNIT OF ISSUE	(5) QTY INC IN UNIT PACK	(6) QTY INC IN UNIT	(7) 30-DAY DS-GS MAINT ALW (a) 1-20	(b) 21-50	(c) 51-100	(8) 1-YR ALW PER 100 EQUIP CNTGCY	(9) DEPOT MAINT ALW PER 100 EQUIP	(10) ILLUSTRATION (a) FIG NO	(b) ITEM NO
				V21030	<70255>	..SCREW,TENSION.....		EA		1						44A	3
				V21020	<70255>	..NUT,CONNECTOR.....		EA		1						44A	4
				V20037	<70255>	..BUSHING,SPACER.....		EA		1						44A	5
				S119	<70255>	..SADDLE ASSEMBLY.....		EA		1						44A	6
				S166FIG1-4 1-16.	<70255>	..CHANEL AND ARM ASSEMBLY....		EA		1						44A	7
P	O		1680-303-8603	W2111-24A	<70255>	.BLADE,WINDSHIELD WIPER..... RPLS-- 1680-510-2512		EA		1	2	3	6		*	44A	8
P	O		1680-303-8604	XW20067-1975	<70255>	.SHAFT ASSEMBLY,FLEXIBLE.....		EA		1	*	2	2		*	44A	9
			5306-754-3049	MS20073-03-04	<96906>	.BOLT,MACHINE.....		EA		1	*	*	*		*	44A	10
P	O		1680-321-1908	XW20345-344-120	<70255>	.ACTUATOR ASSEMBLY..... WINDSHIELD SEE FIG.44B FOR BREAKDOWN		EA		1	*	2	2	12	*	44A	11
P	O		6105-373-3526	XW20173-1	<70255>	.MOTOR,DIRECT CURRENT..... SEE FIG.44C FOR BREAKDOWN		EA		1	*	*	REF	REF	REF	44A	12
P	O		5930-305-2750	XW20336-1	<70255>	.SWITCH,ROTARY.....		EA		1	*	*	*		*	44A	13
P	O		1680-321-1908	XW20345-344-120	<70255>	ACTUATOR ASSEMBLY,WINDSHIELD. SEE FIG.44A FOR NHA		EA			*	REF	REF	REF		44B	
			5306-754-3049	MS20073-03-04	<96906>	.BOLT,MACHINE.....		EA		1	*	*	*		*	44B	1
P	H		5340-964-9153	PS1220-4	<70255>	.RING,RETAINING.....		EA		1	*	*	*		*	44B	3
			1680-736-8879	W20150	<70255>	.SLEEVE,NYLON.....		EA		1	*	*	*			44B	10
			5330-584-0265	MS28775-012	<96906>	.PACKING,PREFORMED.....		EA		1	REF	REF	REF		*	44B	11
			3110-516-5413	PS1219-8	<70255>	.BEARING.....		EA		2	*	*	*			44B	13
			5310-298-7397	W20166-9	<70255>	.WASHER.....		EA		2	*	*	*			44B	14
			1680-326-4470	W20168	<70255>	.CAP,WORM GEAR END.....		EA		2	*	*	*			44B	17
			1680-328-1690	W20169	<70255>	.PLATE,IDLER COVER..... ATTACHING PARTS		EA		1	*	*	*			44B	18
			5305-206-3657	AN507C440R3	<88044>	.SCREW,MACHINE..... ---*---		EA		3	*	*	*			44B	19
P	F		5310-209-5392	W20166-8	<70255>	.WASHER.....		EA		1	*	*	*		*	44B	20
			1680-639-1342	W20170-4	<70255>	.PLATE,NAME.....		EA		1	*	*	*			44B	21
			1680-024-6240	XW20368	<70255>	.WORM AND HOUSING.....		EA		1	*	*	*			44B	25
P	O		6105-373-3526	XW20173-1	<70255>	MOTOR,DIRECT CURRENT SEE.... FIG.41 & 44A FOR NHA		EA			*	*	REF	REF		44C	
P	D		6105-332-7864	XW20195-2	<70255>	.HOUSING,GEAR..... ATTACHING PARTS		EA		1	*	*	*		*	44C	3
			5305-150-9207	AN502-10-18	<88044>	.SCREW,MACHINE..... ---*---		EA		3	*	*	*		*	44C	4
			5970-341-9933	W20388	<70255>	.INSULATOR,VALVE,WINDSHIELD..		EA		1	*	*	*			44C	7
X1				XW20119	<70225>	.CAM ASSEMBLY,MOTOR.....		EA		1						44C	8
			6105-307-5903	XW20128-3	<70255>	.GEAR ASSEMBLY.....		EA		1	*	*	*			44C	9

(1) SOURCE, MAINT AND REC CODE (a) SOURCE CODE	(b) MAINT LEVEL	(c) REC CODE	(2) FEDERAL STOCK NUMBER	REFERENCE NUMBER	(3) DESCRIPTION	MODELS USABLE ON CH-34C	(4) UNIT OF ISSUE	(5) QTY INC IN UNIT PACK	(6) QTY INC IN UNIT	(7) 30-DAY DS GS MAINT ALW (a) 1-20	(b) 21-50	(c) 51-100	(8) 1-YR ALW PER 100 EQUIP CNTGCY	(9) DEPOT MAINT ALW PER 100 EQUIP	(10) ILLUSTRATION (a) FIG NO	(b) ITEM NO
P	D		6105-307-5902	XW20128-2	<70255> .GEAR ASSEMBLY.....		EA		1					*	44C	10
P	D		5340-614-4475	W20048-12	<70255> .RING,RETAINING.....		EA		1						44C	11
P	D		6105-307-5901	XW20128-1	<70255> .GEAR ASSEMBLY.....		EA		1					*	44C	12
			5310-550-5009	MS15795-704	<96906> .WASHER,FLAT.....		HD		1					*	44C	13
P	H		6105-506-7842	W20136	<70255> .GEAR ASSEMBLY.....		EA		1	*	*	*		*	44C	14
P	D		6150-635-9083	XW20137	<70255> .END BELL,ELECTRICAL.....		EA		1					*	44C	
					ROTATING EQUIPMENT											
					ATTACHING PARTS											
			5305-527-4371	W17379	<70255> .SCREW,MACHINE.....		EA		2						44C	15
			5310-011-1041	MS35338-79	<96906> .WASHER,LOCK.....		HD		2					*	44C	16
					---*---											
			5310-261-7437	AN935-3L	<88044> ..WASHER,LOCK.....		HD		2	*	*	*		*	44C	18
P	H		5930-815-9908	PS1264-2	<70255> ..SWITCH,SENSITIVE.....		EA		1	*	*	*		*	44C	19
P	H		3110-791-5467	PS1219-5	<70255> .BEARING,BALL.....		EA		2	*	*	*		*	44C	21
P	D		6105-510-2514	XW17380-4	<70255> .ARMATURE,MOTOR.....		EA		1					*	44C	
			6105-862-5788	XW20442	<70255> .COVER AND NAMEPLATE.....		EA		1	*	*	*			44C	23
					ASSEMBLY											
					ATTACHING PARTS											
P	H		6105-328-1689	W17387	<70255> .GASKET.....		EA		1	*	*	*		*	44C	26
P	F		5935-726-0708	MS3102R10SL3P	<96906> .CONNECTOR,RECEPTACLE.....		EA		1	*	*	*		*	44C	27
					ATTACHING PARTS											
			5305-685-2290	AN500A4-4	<88044> .SCREW,MACHINE.....		EA		4	*	*	*		*	44C	28
					---*---											
			6105-635-7281	XW20174-1	<70255> .STATOR,MOTOR.....		EA		1	*	*	*			44C	
X2	H		6150-547-5387	XW20441	<70255> ..END BELL ASSEMBLY MOTOR....		EA		1	*	*	*		*	44C	
				XW20020	<70255> ...RING,BRUSH MOUNTING.....		EA		2						44C	29
					ATTACHING PARTS											
			5305-151-2198	AN501-4-3	<88044> ...SCREW.....		GR		2	*	*	*		*	44C	30
			5310-551-7770	AN935-4L	<88044> ...WASHER,LOCK.....		EA		2	*	*	*		*	44C	31
					---*---											
P	H		5977-503-2300	XW17386	<70255> ...HOLDER ASSEMBLY,BRUSH.....		EA		2	*	*	*		*	44C	32
					ATTACHING PARTS											
			5305-582-0057	AN500B2-4	<88044> ...SCREW,MACHINE.....		EA		4	*	*	*		*	44C	33
					---*---											
P	H		5977-698-2057	W17392	<70255> ...BRUSH HOLDER,RING.....		EA		1	*	*	*			44C	34
X1				XW20145-2	<70255> ...END BELL ASSEMBLY.....		EA		1						44C	37
P	H		6105-308-3915	PS1239	<70255> ..PROTECTOR,THERMAL.....		EA		1	*	*	*		*	44C	38
					OVERLOAD,ELECTRIC MOTOR											
				XW20142	<70255> ..BASE ASSEMBLY.....		EA		1						44C	
					ATTACHING PARTS											
			5305-957-7814	MS24693S48	<96906> ..SCREW,MACHINE.....		HD		1	*	*	*		*	44C	39
			5305-207-7465	MS35214	<96906> ..SCREW,MACHINE.....				1	*	*	*		*	44C	40
P	F		5310-558-4214	PS198	<70255> ..WASHER,LOCK.....		EA		1	*	*	*		*	44C	41
					---*---											
				AN507-832-14	<88044> ...SCREW,MACHINE.....		EA		2						44C	42
				W20144	<70255> ...SUB-BASE.....		EA		1						44C	43
				W20143	<70255> ...BASE.....		EA		1						44C	44
			6105-547-3369	XW20175	<70255> ..BARREL ASSEMBLY.....		EA		1	*	*	*			44C	45
P	H		5940-018-0244	PS1247-5	<70255> .TERMINAL.....		EA		1	*	*	*		*	44C	46
P	H		5910-018-0240	PS1101-7	<70255> .CAPACITOR,FIXED.....		EA		2	*	*	*		*	44C	47
P	H		6105-875-7984	XW20863	<70255> .PARTS KIT,MOTOR,WINDOW.....		EA		1	*	*	*		*	44C	
					U/O 6105-373-3526 SEE											

(1) SOURCE, MAINT AND REC CODE (a) SOURCE CODE	(b) MAINT LEVEL	(c) REC CODE	(2) FEDERAL STOCK NUMBER	REFERENCE NUMBER	(3) DESCRIPTION	MODELS USABLE ON CH-34C	(4) UNIT OF ISSUE	(5) QTY INC IN UNIT PACK	(6) QTY INC IN UNIT	(7) 30-DAY DS GS MAINT ALW (a) 1-20	(b) 21-50	(c) 51-100	(8) 1-YR ALW PER 100 EQUIP CNTGCY	(9) DEPOT MAINT ALW PER 100 EQUIP	(10) ILLUSTRATION (a) FIG NO	(b) ITEM NO
					CONTINUED FUNCTIONAL GROUP 50 FOR COMPONENTS										44C	
					PLATFORM ASSEMBLY,CANOPY..... FAIRING SERVICE										45	
P	F		1560-652-9240	S1620-65125-75 <78286>	PLATFORM ASSEMBLY,CANOPY-LH.. FAIRING SERVICE RPLS-- 1560-570-4862 SEE FIG.44 FOR NHA		EA			*	*	*			45	
P	O	R	1560-587-2610	S1620-65186-75 <78286>	SERVICE PLATFORM,CANOPY-RH... RPLS-- 1560-310-5367, 1560-570-4863 SEE FIG.44 FOR NHA		EA			*	*	*			45	
P	O		1560-566-2405	S1620-65158-1 <78286>	.CABLE ASSEMBLY,CANOPY..... FAIRING,SERVICE PLATFORM ATTACHING PARTS		EA		1	2	2	3		*	45	1
			5306-156-2695	AN24-11 <88044>	.BOLT,CLEVIS-LH ONLY.....		EA		1	*	*	*		*	45	2
			5306-156-2696	AN24-12 <88044>	.BOLT,CLEVIS-RH ONLY.....		EA		1	*	*	*		*	45	
			5310-187-2354	AN960PD416 <88044>	.WASHER,FLAT-LH ONLY.....		HD		3	*	*	*		*	45	
			5310-184-9001	AN960PD416L <88044>	.WASHER,FLAT-RH ONLY.....		HD		3	*	*	*		*	45	
			5310-176-8108	AN320-4 <88044>	.NUT,SLOTTED,HEXAGON.....		HD		1	*	*	*		*	45	
			5315-234-1856	MS24665-155 <96906>	.PIN,COTTER..... ---*---		HD		1	*	*	*		*	45	
X1				HFL4 <73134>	.BEARING,PLAIN ROD END.....		EA		1						45	
X2	O			S1620-65134-27 <78286>	.BUSHING.....		EA		1						45	3
			4010-566-2406	S1620-65158-2 <78286>	.WIRE ROPE ASSEMBLY,SINGLE... LEG RPL-BY 4010-631-3788		EA			*	*	*			45	
P	O		4010-631-3788	NAS305-33-0201 <80205>	.WIRE ROPE ASSEMBLY,SINGLE... LEG RPLS-- 4010-566-2406 ATTACHING PARTS		EA		1	*	*	*		*	45	4
			5306-156-2695	AN24-11 <88044>	.BOLT,CLEVIS-LH ONLY.....		EA		1	*	*	*		*	45	5
			5306-156-2694	AN24-10 <88044>	.BOLT,CLEVIS-RH ONLY.....		EA		1	*	*	*		*	45	
			5310-187-2354	AN960PD416 <88044>	.WASHER,FLAT-LH ONLY.....		HD		3	*	*	*		*	45	
			5310-184-9001	AN960PD416L <88044>	.WASHER,FLAT-RH ONLY.....		HD		3	*	*	*		*	45	
			5310-176-8108	AN320-4 <88044>	.NUT,SLOTTED,HEXAGON.....		HD		1	*	*	*		*	45	
			5315-234-1856	MS24665-155 <96906>	.PIN,COTTER..... ---*---		HD		1	*	*	*		*	45	
X2	O			S1620-65134-27 <78286>	.BUSHING.....		EA		1						45	6
				S1620-65132-1 <78286>	.LATCH INSTALLATION-LH.....				1						45	
				S1620-65132-2 <78286>	.LATCH INSTALLATION-RH.....				1						45	
P	F		1560-942-2248	S1620-65132-19 <78286>	..CONNECTING LINK,FAIRING....		EA		1	*	*	2		*	45	
P	O		1560-663-2870	S1620-65199 <78286>	..SPRING,HELICAL,EXTENSION... RPLS-- 1560-326-3466		EA		1	2	2	4		*	45	7
P	F		1560-663-2985	S1620-65179 <78286>	..SPRING,HELICAL,EXTENSION...		EA		1	*	2	2		*	45	8
		R	5340-334-2529	S1520-62278 <78286>	..HANDLE,DOOR RPL-BY..... 5340-541-3620		EA								45	

(1) SOURCE, MAINT AND REC CODE (a) SOURCE CODE	(b) MAINT LEVEL	(c) REC CODE	(2) FEDERAL STOCK NUMBER	REFERENCE NUMBER		(3) DESCRIPTION	MODELS USABLE ON CH-34C	(4) UNIT OF ISSUE	(5) QTY INC IN UNIT PACK	(6) QTY INC IN UNIT	(7) 30-DAY DS/GS MAINT ALW (a) 1-20	(b) 21-50	(c) 51-100	(8) 1-YR ALW PER 100 EQUIP CNTGCY	(9) DEPOT MAINT ALW PER 100 EQUIP	(10) ILLUSTRATION (a) FIG NO	(b) ITEM NO
P	F		5340-541-3620	S1520-62278-3	<78286>	..HANDLE,CARGO DOOR RPLS--..		EA		1	*	2	2		*	45	9
						5340-334-2529											
						ATTACHING PARTS											
			5315-823-8747	MS16562-218	<96906>	..PIN,SPRING.....		EA		2	*	*	*		*	45	10
						---*---											
MF	F			S1620-65132-12	<78286>	..BUSHING,SLEEVE.....		EA		1						45	11
						MAKEFR											
						AR 4710-279-0948 TUBE											
P	F		1560-996-0850	S1620-65132-11	<78286>	..TUBE ASSEMBLY.....		EA		1	*	2	2		*	45	12
						ATTACHING PARTS											
			5305-286-1772	AN525-832R14	<88044>	..SCREW,MACHINE.....		EA		2	*	*	*		*	45	13
			5310-184-8966	AN960PD8	<88044>	..WASHER,FLAT.....		HD		4	*	*	*		*	45	
			5310-807-1466	MS21042-08	<96906>	..NUT,SELF-LOCKING,HEXAGON...				2	*	*	*		*	45	
						---*---											
P	F		1560-570-0615	S1620-65132-5	<78286>	..LEVER ASSEMBLY-LH.....		EA		1	*	*	2		*	45	14
P	F		1560-563-9868	S1620-65132-6	<78286>	..LEVER ASSEMBLY-RH.....		EA		1	*	*	*		*	45	
						ATTACHING PARTS											
			5315-080-0170	MS20392-2C9	<96906>	..PIN,STRAIGHT,HEADED.....		EA		1	*	*	*		*	45	15
			5310-167-0753	AN960PD10L	<88044>	..WASHER,FLAT.....		HD		2	*	*	*		*	45	
			5310-183-4406	AN960PD10	<88044>	..WASHER,FLAT.....		HD		1	*	*	*		*	45	
			5315-234-1856	MS24665-155	<96906>	..PIN,COTTER.....		HD		1	*	*	*		*	45	
						---*---											
P	F		1560-981-1298	S1620-65132-14	<78286>	..LEVER,LATCH INSTALLATION,..		EA		1	2	2	3		*	45	15A
						SERVICE PLATFORM											
AF	F			S1620-65132-3	<78286>	..SUPPORT ASSEMBLY-LH.....		EA		1						45	16
AF	F			S1620-65132-4	<78286>	..SUPPORT ASSEMBLY-RH.....		EA		1						45	
						ATTACHING PARTS											
			5306-182-1854	AN3CH5A	<88044>	..BOLT,MACHINE.....		EA		1	*	*	*		*	45	17
			5310-167-0753	AN960PD10L	<88044>	..WASHER,FLAT.....		HD		2	*	*	*		*	45	
			5310-187-2354	AN960PD416	<88044>	..WASHER,FLAT.....		HD		1	*	*	*		*	45	
			5310-877-5797	MS21044N3	<96906>	..NUT,SELF-LOCKING,HEXAGON...		EA		1	*	*	*		*	45	
				MS20470AD4	<96906>	..RIVET.....		EA		4						45	18
						---*---											
MF	F			S1620-65132-8	<78286>	...BRACKET-LH.....		EA		1						45	19
						MAKEFR											
						AR 9535-554-1414 AL ALLY SH											
MF	F			S1620-65132-24	<78286>	...BRACKET,CANOPY FAIRING....		EA		1						45	
						SERVICE PLATFORM-RH											
						MAKEFR											
						AR 9535-554-1414 AL ALLY SH											
				MS20470AD4	<96906>	...RIVET.....		EA		4						45	20
X1				S1620-65125-21	<78286>	.SKIN ASSEMBLY-LH.....		EA		1						45	22
			1560-310-5367	S1620-65186-3	<78286>	.PLATFORM ASSEMBLY-SERVICE-RH										45	
						RPL-BY 1560-587-2610											
P	O	R	1560-587-2610	S1620-65186-75	<78286>	.SERVICE PLATFORM,CANOPY.....		EA		1	*	*	*		*	45	
						RPLS-- 1560-310-5367											
						ATTACHING PARTS											
X2	F			S1620-65125-13	<78286>	.PIN-LH ONLY.....		EA		2						45	23
MF	F			S1620-65186-9	<78286>	.PIN-RH.....		EA		1						45	
						MAKEFR											
						AR 5340-573-0780 PIN,HINGE											

(1) SOURCE, MAINT AND REC CODE (a) SOURCE CODE	(b) MAINT LEVEL	(c) REC CODE	(2) FEDERAL STOCK NUMBER	REFERENCE NUMBER	(3) DESCRIPTION	MODELS USABLE ON CH-34C	(4) UNIT OF ISSUE	(5) QTY INC IN UNIT PACK	(6) QTY INC IN UNIT	(7) 30-DAY DS/GS MAINT A_W (a) 1-20	(b) 21-50	(c) 51-100	(8) 1-YR ALW PER 100 EQUIP CNTGCY	(9) DEPOT MAINT ALW PER 100 EQUIP	(10) ILLUSTRATION (a) FIG NO	(b) ITEM NO
				S1620-65186-10	<78286> .PIN-RH ONLY.....		EA		1						45	
			5306-156-2694	AN24-10	<88044> .BOLT,MACHINE.....		EA		1	*	*	*		*	45	24
			5310-184-9001	AN960PD416L	<88044> .WASHER,FLAT.....		HD		2	*	*	*		*	45	
			5310-176-8108	AN320-4	<88044> .NUT,SLOTTED,HEXAGON.....		HD		1	*	*	*		*	45	
			5315-234-1856	MS24665-155	<96906> .PIN,COTTER.....		HD		1	*	*	*		*	45	
P	F		1560-905-2104	S1620-65134-28	<78286> .BUSHING-LH ONLY.....		EA		1	2	2	3		*	45	25
					---*---											
P	F		9320-141-7575	32832	<75183> ..RUBBER,SPECIAL-SHAPED..... SECTION		FT		1	*	*	*		*	45	30
P	F		5305-546-6930	559	<61864> ..SCREW,MACHINE.....		EA		5	*	*	*		*	45	31
			5310-184-8966	AN960PD8	<88044> ..WASHER,FLAT.....		HD		10	*	*	*		*	45	
			5310-060-2039	MS21044D08	<96906> ..NUT,SELF-LOCKING,HEXAGON...		EA		5	*	*	*		*	45	
X2	F		1560-633-8472	S1620-65134-30	<78286> ...SUPPORT,CANOPY FAIRING....		EA		1	*	*	*		*	45	
MF	F			S1620-65125-11	<78286> ...HINGE,CANOPY FAIRING-LH...		EA		1						45	32
					MAKEFR											
					AR 5340-634-7884 HINGE											
P	F		1560-711-4589	S1620-65186-7	<78286> ...HINGE,CANOPY FAIRING-RH...		EA		1	*	*	*		*	45	
P	F		1560-711-4587	S1620-65186-8	<78286> ...HINGE.....		EA		1	*	*	*		*	45	
MF	F			S1620-65126-69	<78286> ...CLIP,CANOPY FAIRING.....		EA		1						45	
					MAKEFR											
					AR 9535-554-1412 AL ALLY SH											
P	F		1560-336-0779	S1620-65171-1	<78286> ...BUMPER,CANOPY FAIRING.....		EA		1	*	2	2		*	45	34
P	F		1560-336-0782	S1620-65171-2	<78286> ...BUMPER,CANOPY FAIRING.....		EA		3	*	2	2		*	45	35
MF	F			S1620-65126-42	<78286> ....SUPPORT,SERVICE..... PLATFORM,FRAME		EA		1						45	37
					MAKEFR											
					AR 9330-260-3806 PLASTIC SH											
				MS20470AD4	<96906> ....RIVET.....		EA		4						45	38
MF	F			S1620-65126-41	<78286> ....SUPPORT.....		EA		1						45	41
					MAKEFR											
					AR 9330-576-3984 PLASTIC SH											
				S1620-65187-26	<78286> ...CLIP-RH ONLY.....		EA		2						45	45
				S1620-65186-11	<78286> ..DOOR INSTALLATION-RH ONLY..				1						45	
X2	F			S1620-65186-13	<78286> ...SKIN ASSEMBLY-DOOR..... ATTACHING PARTS		EA		1						45	50
			5320-243-0671	P5F	<29666> ...RIVET,BLIND.....		EA		8	*	*	*			45	51
					---*---											
X2	F			S1620-65186-14	<78286> ....SKIN..... ATTACHING PARTS		EA		1						45	55
P	F		5320-147-1646	100V4B	<29666> ....RIVET,BLIND.....		EA		33	*	*	*		*	45	56
			5320-147-1649	100V4E	<29666> ....RIVET,BLIND.....		EA		3	*	*	*			45	58
					---*---											
X2	F			S1620-65187-34	<78286> ....STRIP-CHAFING.....		EA		1						45	59
X2	F			S1620-65186-15	<78286> ....SKIN.....		EA		1						45	61
			1560-575-2055	S1620-65186-12	<78286> ....DOOR ASSEMBLY,CANOPY..... FAIRING RPL-BY 1560-962-0109										45	
P	F		1560-962-0109	S1620-65227-2	<78286> ....DOOR ASSEMBLY,SERVICE.... PLATFORM RPLS-- 1560-575-2055		EA		1	*	*	*		*	45	63
P	F		1560-587-6410	S1620-65189-1	<78286> ....HINGE ASSEMBLY,CANOPY....		EA		2	*	*	2		*	45	

(1) SOURCE, MAINT AND REC CODE (a) SOURCE CODE	(b) MAINT LEVEL	(c) REC CODE	(2) FEDERAL STOCK NUMBER	REFERENCE NUMBER	(3) DESCRIPTION	MODELS USABLE ON CH-34C	(4) UNIT OF ISSUE	(5) QTY INC IN UNIT PACK	(6) QTY INC IN UNIT	(7) 30-DAY DS GS MAINT ALW (a) 1-20	(b) 21-50	(c) 51-100	(8) 1-YR ALW PER 100 EQUIP CNTGCY	(9) DEPOT MAINT ALW PER 100 EQUIP	(10) ILLUSTRATION (a) FIG NO	(b) ITEM NO
					CONTINUED										45	
					DOOR											
					ATTACHING PARTS											
			5315-081-7023	MS20392-4C11 <96906>	....PIN,STRAIGHT,HEADED.....		EA		1	*	*	*		*	45	
			5310-167-0753	AN960PD10L <88044>	....WASHER,FLAT.....		HD		2	*	*	*		*	45	
			5310-183-4406	AN960PD10 <88044>	....WASHER,FLAT.....		HD		1	*	*	*		*	45	
			5315-234-1864	MS24665-302 <96906>	....PIN,COTTER.....		HD		AR	*	*	*		*	45	
					---*---											
					COCKPIT CANOPY ASSEMBLY.....										46	
AF	F			S1620-65100-2 <78286>	CANOPY ASSEMBLY, COCKPIT		EA								46	
					SEE FIG.44 FOR NHA											
P	F		1560-332-3514	S1620-65159-3 <78286>	.HANDLE,COCKPIT CANOPY.....		EA		2	*	*	REF		REF	46	1
					ATTACHING PARTS											
			5306-156-2395	AN24-30A <88044>	.BOLT,CLEVIS.....		HD		1	*	*	*		*	46	2
			5310-184-9001	AN960PD416L <88044>	.WASHER,FLAT.....		HD		2	*	*	*		*	46	
			5310-877-5796	MS21044N4 <96906>	.NUT,SELF-LOCKING,HEXAGON....		EA		1	*	*	*		*	46	
			5306-156-2527	AN23-25A <88044>	.BOLT,CLEVIS.....		HD		1	*	*	*		*	46	3
			5306-144-3859	AN25-23 <88044>	.BOLT,CLEVIS.....		EA		1	*	*	*		*	46	
			5310-167-0753	AN960PD10L <88044>	.WASHER,FLAT.....		HD		2	*	*	*		*	46	
			5310-877-5797	MS21044N3 <96906>	.NUT,SELF-LOCKING,HEXAGON....		EA		1	*	*	*		*	46	
			5306-150-9925	AN23-40A <88044>	.BOLT,CLEVIS.....		EA		1	*	*	*		*	46	4
			5310-167-0753	AN960PD10L <88044>	.WASHER,FLAT.....		HD		2	*	*	*		*	46	
			5310-877-5798	MS21044D3 <96906>	.NUT,SELF-LOCKING,HEXAGON....		EA		1	*	*	*		*	46	
					---*---											
X2	F			S1620-65174-3 <78286>	.SPACER.....		EA		1						46	5
X2	F			S1620-65174-2 <78286>	.SPACER.....		EA		1						46	6
X2	F			S1620-65174-4 <78286>	.SPACER.....		EA		1						46	7
X2	F			S1620-65174-1 <78286>	.SPACER.....		EA		1						46	8
X2	F			S1620-65165-1 <78286>	.RETAINER-OUTBOARD-LH.....		EA		1						46	9
				S1620-65165-2 <78286>	.RETAINER-OUTBOARD-RH.....		EA		1						46	
X2	F			S1620-65148-7 <78286>	.RETAINER-OUTBOARD-LH.....		EA		1						46	11
X2	F			S1620-65155-7 <78286>	.RETAINER-OUTBOARD-LH.....		EA		1						46	13
X2	F			S1620-65155-8 <78286>	.RETAINER-OUTBOARD-RH.....		EA		1						46	
					ATTACHING PARTS											
			5310-184-8966	AN960PD8 <88044>	.WASHER,FLAT.....		HD		8	*	*	*		*	46	
			5305-844-3572	AN525D832R8 <88044>	.SCREW,MACHINE.....		EA		2	*	*	*		*	46	15
			5310-184-8966	AN960PD8 <88044>	.WASHER,FLAT.....		HD		4	*	*	*		*	46	
			5310-060-2039	MS21044D08 <96906>	.NUT,SELF-LOCKING,HEXAGON....		EA		2	*	*	*		*	46	
					---*---											
X2	F			S1620-65138 <78286>	.RETAINER-OUTBOARD-LH.....		EA		1						46	16
X2	F		1560-226-2741	S1620-65137 <78286>	.RETAINER-OUTBOARD-RH.....		EA		1	*	*	*			46	
					ATTACHING PARTS											
			5305-844-3572	AN525D832R8 <88044>	.SCREW,MACHINE.....		EA		17	*	*	*		*	46	17
			5310-184-8966	AN960PD8 <88044>	.WASHER,FLAT.....		HD		34	*	*	*		*	46	
			5310-060-2039	MS21044D08 <96906>	.NUT,SELF-LOCKING,HEXAGON....		EA		17	*	*	*		*	46	
			5305-558-8934	AN525D10R8 <88044>	.SCREW,MACHINE.....		HD		5	*	*	*		*	46	18

(1) SOURCE, MAINT AND REC CODE (a) SOURCE CODE	(b) MAINT LEVEL	(c) REC CODE	(2) FEDERAL STOCK NUMBER	REFERENCE NUMBER	(3) DESCRIPTION	MODELS USABLE ON CH-34C	(4) UNIT OF ISSUE	(5) QTY INC IN UNIT PACK	(6) QTY INC IN UNIT	(7) 30-DAY DS GS MAINT ALW (a) 1-20	(b) 21-50	(c) 51-100	(8) 1-YR ALW PER 100 EQUIP CNTGCY	(9) DEPOT MAINT ALW PER 100 EQUIP	(10) ILLUSTRATION (a) FIG NO	(b) ITEM NO
			5310-167-0753	AN960PD10L <88044>	.WASHER,FLAT.....		HD		10	*	*	*		*	46	
			5310-877-5798	MS21044D3 <96906>	.NUT,SELF-LOCKING,HEXAGON....		EA		5	*	*	*		*	46	
					---*---											
X2	F			S1620-65148-3 <78286>	.RETAINER-OUTBOARD-LH.....		EA		1						46	19
X2	F			S1620-65148-4 <78286>	.RETAINER-OUTBOARD-RH.....		EA		1						46	
					ATTACHING PARTS											
			5305-844-3572	AN525D832R8 <88044>	.SCREW,MACHINE.....		EA		4	*	*	*		*	46	20
			5310-184-8966	AN960PD8 <88044>	.WASHER,FLAT.....		HD		8	*	*	*		*	46	
			5310-060-2039	MS21044D08 <96906>	.NUT,SELF-LOCKING,HEXAGON....		EA		4	*	*	*		*	46	
P	F		5305-546-6930	559 <61864>	.SCREW,MACHINE.....		EA		1	*	*	*		*	46	21
			5310-184-8966	AN960PD8 <88044>	.WASHER,FLAT.....		HD		2	*	*	*		*	46	
			5310-060-2039	MS21044D08 <96906>	.NUT,SELF-LOCKING,HEXAGON....		EA		1	*	*	*		*	46	
					---*---											
			1560-301-3553	S1620-65150-1 <78286>	.PANEL,TRANSPARENT FUSELAGE..		EA								46	
P	F		1560-611-3472	S1620-65150-3 <78286>	.PANEL,COCKPIT CANOPY.....		EA		1	*	2	2		*	46	22
			1560-301-3554	S1620-65150-2 <78286>	.PANEL,TRANSPARENT,FUSELAGE..										46	
					RPL-BY 1560-611-3473											
P	F		1560-611-3473	S1620-65150-4 <78286>	.PANEL,TRANSPARENT.....		EA		1	*	2	2		*	46	
					RPLS-- 1560-301-3554											
MO	O			S1620-65188 <78286>	.EDGING,COCKPIT CANOPY,RUBBER		FT		AR						46	23
					MAKEFR											
					AR 9320-833-6083 RUBBER CHN											
			1560-301-3557	S1620-65156-4 <78286>	.PANEL,TRANSPARENT,FUSELAGE..										46	
					RPL-BY 1560-611-3479											
P	F		1560-611-3479	S1620-65156-10 <78286>	.PANEL,TRANSPARENT RPLS--...		EA		1	2	2	3		*	46	34
					1560-301-3557											
			1560-301-3558	S1620-65156-5 <78286>	.PANEL,TRANSPARENT,FUSELAGE..										46	
					RPL-BY 1560-611-3480											
P	F		1560-611-3480	S1620-65156-11 <78286>	.PANEL,TRANSPARENT RPLS--...		EA		1	2	2	3		*	46	
					1560-301-3558											
MO	O			S1620-65188 <78286>	.EDGING,COCKPIT CANOPY,RUBBER		FT		AR						46	35
					MAKEFR											
					AR 9320-833-6083 RUBBER CHN											
			1560-301-3556	S1620-65156-3 <78286>	.PANEL,TRANSPARENT,FUSELAGE..										46	
					RPL-BY 1560-611-3478											
P	F		1560-611-3478	S1620-65156-9 <78286>	.PANEL,TRANSPARENT,FUSELAGE..		EA		1	*	2	2		*	46	39
					RPLS-- 1560-301-3556											
MO	O			S1620-65188 <78286>	.EDGING,COCKPIT CANOPY,RUBBER		FT		AR						46	40
					MAKEFR											
					AR 9320-833-6083 RUBBER CHN											
			1560-570-9845	S1620-65140-1 <78286>	.RETAINER-INBOARD-LH.....		EA		1	*	*	*			46	41
X2	F			S1620-65140-2 <78286>	.RETAINER-INBOARD-RH.....		EA		1						46	
X2	F			S1620-65142-1 <78286>	.FAIRING ASSEMBLY-RETAINER...		EA		1						46	42
MF	F			S1620-65142-3 <78286>	.RUBBER,CANOPY FAIRING.....		EA		1						46	
					RETAINER											
					MAKEFR											
					AR 9320-241-9763 RBR SH,SLD											
			1560-327-3869	S1620-65151-1 <78286>	.PANEL,COCKPIT,TRANSPARENT,..		EA			*	*	*			46	
					FRONT CENTER RPL-BY											
					1560-611-3474											
P	F		1560-611-3474	S1620-65151-3 <78286>	.PANEL,COCKPIT,CANOPY.....		EA		1	*	2	2		*	46	44

(1) SOURCE, MAINT AND REC CODE (a) SOURCE CODE	(b) MAINT. LEVEL	(c) REC. CODE	(2) FEDERAL STOCK NUMBER	REFERENCE NUMBER	(3) DESCRIPTION	MODELS USABLE ON CH-34C	(4) UNIT OF ISSUE	(5) QTY INC IN UNIT PACK	(6) QTY INC IN UNIT	(7) 30-DAY DS/GS MAINT ALW (a) 1-20	(b) 21-50	(c) 51-100	(8) 1-YR ALW PER 100 EQUIP CNTGCY	(9) DEPOT MAINT ALW PER 100 EQUIP	(10) ILLUSTRATION (a) FIG NO	(b) ITEM NO
					CONTINUED										46	44
					FRONT CENTER RPLS-- 1560-327-3869											
MO	O			S1620-65188 <78286>	.EDGING,COCKPIT CANOPY,RUBBER MAKEFR		FT		AR						46	45
					AR 9320-833-6083 RUBBER CHN											
			1560-327-3870	S1620-65151-2 <78286>	.PANEL,COCKPIT,TRANSPARENT... FRONT LH RPL-BY 1560-611-3475										46	
P	F		1560-611-3475	S1620-65151-4 <78286>	.PANEL,COCKPIT,CANOPY,FRONT.. LH RPLS-- 1560-327-3870		EA		1	2	2	4		*	46	46
P	F		1560-327-3866	S1620-65108 <78286>	.PANEL,WINDSHIELD FUSELAGE...		EA		1	*	2	2		*	46	
			1560-327-3866	R203-1560H34-004 <75829>	ADDED PART NO.FOR ABOVE ITEM.		EA			*	REF	REF			46	
MO	O			S1620-65188 <78286>	.EDGING,COCKPIT CANOPY,RUBBER MAKEFR		FT		AR						46	47
					AR 9320-833-6083 RUBBER CHN											
X2	F			S1620-65153-1 <78286>	.RETAINER-INBOARD-LH.....		EA		1						46	48
X2	F			S1620-65153-2 <78286>	.RETAINER-INBOARD-RH.....		EA		1						46	
X2	F			S1620-65139-5 <78286>	.RETAINER-INBOARD-LH.....		EA		1						46	49
X2	F			S1620-65139-6 <78286>	.RETAINER-INBOARD-RH.....		EA		1						46	
X2	F			S1620-65139-1 <78286>	.RETAINER-INBOARD-LH.....		EA		1						46	50
X2	F			S1620-65139-2 <78286>	.RETAINER-INBOARD-RH.....		EA		1						46	
X2	F			S1620-65139-11 <78286>	.RETAINER-INBOARD.....		EA		1						46	51
X2	F			S1620-65139-9 <78286>	.RETAINER-INBOARD.....		EA		1						46	52
			5310-184-8966	AN960PD8 <88044>	.WASHER,FLAT.....		HD		26	*	*	*		*	46	
			1560-326-3464	S1620-65156-1 <78286>	.PANEL,COCKPIT TRANSPARENT... FRONT LH RPL-BY 1560-611-3476										46	
P	F		1560-611-3476	S1620-65156-7 <78286>	.PANEL,COCKPIT,CANOPY,FRONT.. LH RPLS-- 1560-326-3464		EA		1	2	2	3		*	46	55
			1560-301-3555	S1620-65156-2 <78286>	.PANEL,COCKPIT TRANSPARENT... FRONT RH RPL-BY 1560-611-3477										46	
P	F		1560-611-3477	S1620-65156-8 <78286>	.PANEL TRANSPARENT,FRONT..... RPLS-- 1560-301-3555		EA		1	*	2	2		*	46	
MO	O			S1620-65188 <78286>	.EDGING,COCKPIT CANOPY,RUBBER MAKEFR		FT		AR						46	56
					AR 9320-833-6083 RUBBER CHN											
X2	F			S1620-65155-2 <78286>	.RETAINER ASSEMBLY-RH.....		EA		1						46	
P	F		9320-633-6840	S1620-65155-17 <78286>	..EDGING,RETAINER.....		EA		1	*	*	*		*	46	59
P	F		1680-650-1637	S1620-65155-18 <78286>	..EDGING,COCKPIT CANOPY,..... RETAINER		EA		1	2	2	3		*	46	60
P	F		1680-650-1636	S1620-65155-19 <78286>	..EDGING,COCKPIT CANOPY,..... RETAINER		EA		1	*	2	2		*	46	61
				S1620-65105-3 <78286>	.RELEASE INSTALLATION-LH.....										46	
				S1620-65094-1 <78286>	.RELEASE INSTALLATION-LH.....										46	
				S1620-65105-4 <78286>	.RELEASE INSTALLATION-RH.....										46	
				S1620-65094-2 <78286>	.RELEASE INSTALLATION-RH.....										46	
P	F		1560-576-9350	S1620-65123 <78286>	..SPRING,HELICAL EXTENSION...		EA		1	*	*	*		*	46	62
X2	F		1560-654-3176	S1620-65118-9 <78286>	..SPACER,SLEEVE.....		EA		4	*	*	*		*	46	
			5315-234-1856	MS24665-155 <96906>	..PIN,COTTER.....		HD		1	*	*	*		*	46	67

(1) SOURCE, MAINT AND REC CODE (a) SOURCE CODE	(b) MAINT LEVEL	(c) REC CODE	(2) FEDERAL STOCK NUMBER	REFERENCE NUMBER		(3) DESCRIPTION	MODELS USABLE ON CH-34C	(4) UNIT OF ISSUE	(5) QTY INC IN UNIT PACK	(6) QTY NC IN UNIT	(7) 30-DAY DS/GS MAINT ALW (a) 1-20	(b) 21-50	(c) 51-100	(8) 1-YR ALW PER 100 EQUIP CNTGCY	(9) DEPOT MAINT ALW PER 100 EQUIP	(10) ILLUSTRATION (a) FIG NO	(b) ITEM NO
			5310-183-4406	AN960PD10	<88044>	..WASHER,FLAT.....		HD		1	*	*	*		*	46	68
X2	F		1560-997-6296	S1620-65094-28	<78286>	..PLATE-LH U/O.....		EA		1	*	*	*		*	46	78
						PN S1620-65094-1											
				S1620-65094-20	<78286>	..PLATE RPL-BY.....										46	
						PN S1620-65094-27											
X2	F			S1620-65094-27	<78286>	..PLATE-RH RPLS--.....		EA		1						46	
						PN S1620-65094-20 U/O											
						PN S1620-65094-2											
						ATTACHING PARTS											
			5305-180-0010	AN525-10R8	<88044>	..SCREW,MACHINE.....		HD		3	*	*	*		*	46	79
			5310-167-0818	AN960-10	<88044>	..WASHER,FLAT.....		HD		3	*	*	*		*	46	
			5310-263-2862	MS21045C3	<96906>	..NUT,SELF-LOCKING,HEXAGON...		HD		3	*	*	*		*	46	
						---*---											
P	F		1560-620-4118	S1620-65094-3	<78286>	..HANDLE ASSEMBLY-LH.....		EA		1	*	*	2		*	46	81
						U/O PN S1620-65094-1											
P	F		1560-620-4119	S1620-65094-4	<78286>	..HANDLE ASSEMBLY-RH.....		EA		1	*	*	2		*	46	
						U/O PN S1620-65094-2											
						ATTACHING PARTS											
			5305-286-0213	AN525-832R10	<88044>	..SCREW,MACHINE.....		HD		1	*	*	*		*	46	82
			5310-184-8966	AN960PD8	<88044>	..WASHER,FLAT.....		HD		1	*	*	*		*	46	
			5310-811-3494	MS21044N08	<96906>	..NUT,SELF-LOCKING,HEXAGON...		EA		1	*	*	*		*	46	
						---*---											
P	O		1560-766-6369	S1620-65094-30	<78286>	..SHIELD,CANOPIES,MOVABLE....		EA		2	2	2	5		*	46	83
						AIRCRAFT											
				S1620-65211-1	<78286>	.SUPPORT INSTALLATION.....				1						46	
						LONGERON-LH											
				S1620-65211-2	<78286>	.SUPPORT INSTALLATION.....				1						46	
						LONGERON-RH											
						ATTACHING PARTS											
			5305-180-0012	AN525-10R10	<88044>	.SCREW,MACHINE.....		HD		2	*	*	*		*	46	84
			5310-167-0753	AN960PD10L	<88044>	.WASHER,FLAT-UNDER HEAD.....		HD		2	*	*	*		*	46	
			5310-726-1802	AN955-3	<88044>	.WASHER,CONVEX-UNDER NUT.....		EA		2	*	*	*		*	46	
			5310-877-5797	MS21044N3	<96906>	.NUT,SELF-LOCKING,HEXAGON....		EA		2	*	*	*		*	46	
			5305-180-0010	AN525-10R8	<88044>	.SCREW,MACHINE.....		HD		2	*	*	*		*	46	85
			5310-167-0753	AN960PD10L	<88044>	.WASHER,FLAT.....		HD		2	*	*	*		*	46	
			5305-180-0010	AN525-10R8	<88044>	.SCREW,MACHINE.....		HD		2	*	*	*		*	46	86
			5310-167-0753	AN960PD10L	<88044>	.WASHER,FLAT.....		HD		4	*	*	*		*	46	
			5310-877-5797	MS21044N3	<96906>	.NUT,SELF-LOCKING,HEXAGON....		EA		2	*	*	*		*	46	
						---*---											
AF	F			S1620-65211-3	<78286>	..SUPPORT ASSEMBLY-LONGERON..		EA		1						46	87
						LH											
AF	F			S1620-65211-4	<78286>	..SUPPORT ASSEMBLY-LONGERON..		EA		1						46	
						RH											
X2	F		1560-639-0582	S1620-65211-9	<78286>	...LONGERON SUPPORT-LH.....		EA		1	*	*	*		*	46	88
P	F		1560-633-6964	S1620-65211-8	<78286>	...LONGERON SUPPORT-RH.....		EA		1	*	*	*		*	46	
MF	F			S1620-65211-7	<78286>	..LONGERON SUPPORT,.....		EA		1						46	100
						INSTALLATION											
X2	F			S1620-65146-1	<78286>	.SKIN ASSEMBLY.....		EA		1						46	102
MF	F			S1620-65191-11	<78286>	..WINDOW,AIRCRAFT.....		EA		1						46	
						MAKEFR											
						AA 9330-202-1891 PLASTIC SH											
				S1620-65098	<78286>	...SUPPORT INSTALLATION.....										46	

(1) SOURCE, MAINT AND REC CODE (a) SOURCE CODE	(b) MAINT LEVEL	(c) REC CODE	(2) FEDERAL STOCK NUMBER	REFERENCE NUMBER	(3) DESCRIPTION	MODELS USABLE ON CH-34C	(4) UNIT OF ISSUE	(5) QTY INC IN UNIT PACK	(6) QTY INC IN UNIT	(7) 30-DAY DS GS MAINT ALW (a) 1-20	(b) 21-50	(c) 51-100	(8) 1-YR ALW PER 100 EQUIP CNTGCY	(9) DEPOT MAINT ALW PER 100 EQUIP	(10) ILLUSTRATION (a) FIG NO	(b) ITEM NO
X2	F		1560-633-6962	S1620-65097-7	<78286> .....BRACKET,ANGLE.....		EA		1	*	*	*		*	46	111
X2	F		1560-943-0761	S1620-61932-1	<78286> ...COVER ASSEMBLY-LH.....		EA		1	*	*	*		*	46	
X2	F			S1620-61932-2	<78286> ...COVER ASSEMBLY-RH.....		EA		1						46	
				MS20426B3	<96906> ...RIVET.....		EA		3						46	116
MF	F			S1620-65141-69	<78286> ...BRACKET,FUSELAGE.....		EA		1						46	120
					MAKEFR											
					AR 9535-554-1414 AL ALLY SH											
					ATTACHING PARTS											
			5320-167-4950	P4C	<29666> ...RIVET,BLIND.....		EA		4	*	*	*			46	121
					---*---											
				S1620-61212-4	<78286> EMERGENCY HATCH MECHANISM....										47	
					INSTALLATION SEE FIG.41											
					FOR NHA											
MF	F			S14-20-5178	<78286> .LINK,HATCH EMERGENCY.....		EA		1						47	1
					MAKEFR											
					AR 4710-279-0948 TUBE											
					ATTACHING PARTS											
			5315-951-2395	MS20392-2C13	<96906> .PIN,STRAIGHT,HEADED.....		EA		2	*	*	*		*	47	2
			5310-183-4406	AN960PD10	<88044> .WASHER,FLAT.....		HD		4	*	*	*		*	47	
			5315-234-1856	MS24665-153	<96906> .PIN,COTTER.....		HD		2	*	*	*		*	47	
					---*---											
P	F		1560-397-1412	S14-20-2392-24	<78286> .HANDLE ASSEMBLY.....		EA		1	*	*	*		*	47	3
					ATTACHING PARTS											
			5320-118-1762	AN435M4-10	<88044> .RIVET,SOLID.....		LB		1	*	*	*		*	47	4
					---*---											
			5310-167-0821	AN960-616	<88044> .WASHER,FLAT.....		HD		1	*	*	*		*	47	5
P	F		1560-520-6277	S14-20-5184	<78286> .HANDLE ASSEMBLY.....		EA		1	*	*	*		*	47	6
P	F		5355-587-3012	NAS124Y125	<80205> ..KNOB.....		EA		1	*	*	*		*	47	6A
					ATTACHING PARTS											
			5315-826-3251	MS16562-223	<96906> ..PIN,SPRING.....		EA		1	*	*	*		*	47	7
					---*---											
P	F		1560-508-7342	S1620-61539-2	<78286> .LATCH ASSEMBLY,EMERGENCY....		EA		1	*	*	*		*	47	8
					HATCH											
X2	F			S14-20-5179	<78286> .TUBE.....		EA		1						47	9
					ATTACHING PARTS											
			5315-826-3251	MS16562-223	<96906> .PIN,SPRING.....		EA		1	*	*	*		*	47	10
					---*---											
P	F		1560-508-7342	S1620-61539-2	<78286> .LATCH ASSEMBLY,EMERGENCY....		EA		1	*	*	*		REF	47	11
					HATCH											
			9905-696-1825	S14-5C-1015	<78286> .MARKER,SELF-LUMINOUS.....										47	
					OBS-BY 1560-022-9002											
P	F		1560-022-9002	LAB659S1	<02006> .MARKER OBSLTS 9905-696-1825		EA		1	*	*	*		*	47	12
					ATTACHING PARTS											
			5305-059-8248	MS35214-23	<96906> .SCREW,MACHINE.....				2	*	*	*		*	47	13
			5310-188-7721	AN960PD6	<88044> .WASHER,FLAT.....		HD		2	*	*	*		*	47	
					---*---											

(1) SOURCE, MAINT AND REC CODE (a) SOURCE CODE	(b) MAINT LEVEL	(c) REC CODE	(2) FEDERAL STOCK NUMBER	REFERENCE NUMBER		(3) DESCRIPTION	MODELS USABLE ON CH-34C	(4) UNIT OF ISSUE	(5) QTY INC IN UNIT PACK	(6) QTY INC IN UNIT	(7) 30-DAY DS, GS MAINT ALW (a) 1-20	(b) 21-50	(c) 51-100	(8) 1-YR ALW PER 100 EQUIP CNTCCY	(9) DEPOT MAINT ALW PER 100 EQUIP	(10) ILLUSTRATION (a) FIG NO	(b) ITEM NO
			1560-570-0594	S1620-61212-1	<78286>	.SPRING,EMERGENCY HATCH.....		EA								47	
P	F		1560-587-2609	S1620-61212-6	<78286>	.SPRING,EMERGENCY HATCH..... RPLS-- 1560-570-0594		EA		1	*	*	*		*	47	14
MF	F			S1620-61894	<78286>	.DOUBLER..... MAKEFR AR 9535-554-1414 AL ALLY SH		EA		1						47	16
MF	F			S1620-61201-41	<78286>	.WEATHER STRIP,DOOR ASSEMBLY. MAKEFR AR 9320-241-9754 RBR SH,SLD		EA		1						47	
				S1620-61201	<78286>	CABIN DOOR INSTALLATION..... SEE FIG.41 FOR NHA										48	
P	O		1560-575-2017	S1620-61201-19	<78286>	.WELD ASSEMBLY,CABIN DOOR.... ATTACHING PARTS		EA		1	2	2	4		*	48	1
			5305-984-6198	MS35206-246	<96906>	.SCREW,MACHINE.....		HD		2	*	*	*		*	48	2
			5310-184-8966	AN960PD8	<88044>	.WASHER,FLAT.....		HD		2	*	*	*		*	48	
			5310-807-1466	MS21042-08	<96906>	.NUT,SELF-LOCKING,HEXAGON.... ---*---				2	*	*	*		*	48	
P	F		5340-862-4911	S1620-61201-30	<78286>	.SHIM.....		EA		1	*	*	*		*	48	3
P	F	R	1560-326-3416	S1620-61201-1	<78286>	.DOOR ASSEMBLY,FUSELAGE.....		EA		1	*	2	2		*	48	4
				S1620-61203	<78286>	..RELEASE INSTALLATION..... EMERGENCY										48	
				S1620-61203-2	<78286>	...HANDLE ASSEMBLY AND..... INSTALLATION										48	
P	F		1560-674-1173	S1620-61203-6	<78286>	....HANDLE ASSEMBLY,OUTSIDE.. CABIN ATTACHING PARTS		EA		1	*	2	2		*	48	5
			5320-702-4999	MS20615-5M14	<96906>	....RIVET..... ---*---		LB		1	*	*	*			48	6
MF	F			S14-20-2663-13	<78286>	....PIN,TAPERED,THREADED..... MAKEFR AR 5315-198-8091 PIN		EA		1						48	
X2	F		1560-766-2017	S1620-61203-5	<78286>	....HANDLE ASSEMBLY.....		EA		1	*	*	*		*	48	6A
X2	F			S1620-61203-25	<78286>	....ROD ASSEMBLY.....		EA		1						48	
P	O		1560-622-4862	S1620-61203-31	<78286>	....SPRING,CABIN DOOR..... RPLS-- 1560-575-2018, 1560-589-6107 ATTACHING PARTS		EA		1	*	2	2		*	48	7
				MS20470AD4	<96906>	....RIVET..... ---*---		EA		2						48	8
X2	F		1560-674-1174	S1620-61203-4	<78286>	....BEARING ASSEMBLY,FUSELAGE		EA		1	*	*	*		*	48	
P	F		1560-710-6648	S1620-61203-32	<78286>	....CLIP..... ATTACHING PARTS		EA		1	*	*	*		*	48	9
			5306-638-1476	AN3DD11A	<88044>	....BOLT,MACHINE.....		EA		2	*	*	*		*	48	10
			5310-167-0753	AN960PD10L	<88044>	....WASHER,FLAT.....		HD		4	*	*	*		*	48	
			5310-877-5798	MS21044D3	<96906>	....NUT,SELF-LOCKING,HEXAGON.		EA		2	*	*	*		*	48	

(1) SOURCE, MAINT AND REC CODE (a) SOURCE CODE	(b) MAINT LEVEL	(c) REC CODE	(2) FEDERAL STOCK NUMBER	REFERENCE NUMBER	(3) DESCRIPTION	MODELS USABLE ON CH-34C	(4) UNIT OF ISSUE	(5) QTY INC IN UNIT PACK	(6) QTY INC IN UNIT	(7) 30-DAY DS/GS MAINT ALW (a) 1-20	(b) 21-50	(c) 51-100	(8) 1-YR ALW PER 100 EQUIP CNTGCY	(9) DEPOT MAINT ALW PER 100 EQUIP	(10) ILLUSTRATION (a) FIG NO	(b) ITEM NO
					CONTINUED										48	
					---*---											
MF	F			S1620-61201-41 <78286>	...WEATHER STRIP,DOOR.....		EA		1						48	
					ASSEMBLY											
					MAKEFR											
					AR 9320-241-9754 RBR SH,SLD											
P	F		1560-613-3027	S1620-61201-31 <78286>	..WINDOW,CABIN DOOR RPLS--..		EA		1	2	2	4		*	48	11
					1560-326-3418											
					ATTACHING PARTS											
P	F		9320-250-0816	34465R <30778>	..RUBBER,SPECIAL SHAPED.....		FT		1	*	*	*		REF	48	12
					SECTION											
P	F		9320-379-2615	33197R <30778>	..RUBBER SPECIAL.....		EA		1	*	*	*		REF	48	13
					---*---											
P	F		1560-567-1100	S1620-65159-5 <78286>	..HANDLE,FUSELAGE.....		EA		1	*	*	*		REF	48	16
					ATTACHING PARTS											
			5306-292-5204	AN4DDH7A <88044>	..BOLT,MACHINE.....		EA		2	*	*	*		*	48	17
			5310-187-2354	AN960PD416 <88044>	..WASHER,FLAT.....		HD		2	*	*	*		*	48	
			5310-857-4960	MS21044D4 <96906>	..NUT,SELF-LOCKING,HEXAGON...		EA		2	*	*	*		*	48	
					---*---											
				S1620-61204 <78286>	..LATCH INSTALLATION.....				1						48	
P	F		1560-326-3428	S1620-61294 <78286>	...SPRING,HELICAL EXTENSION..		EA		1	*	*	2		*	48	18
P	F		1560-672-9453	S1620-61204-15 <78286>	...HANDLE-OUTSIDE.....		EA		1	*	2	2		*	48	19
					ATTACHING PARTS											
			5315-954-6841	AN385A40P8 <88044>	...PIN,TAPERED,PLAIN.....		EA		1	*	*	*		*	48	20
					---*---											
P	O		1560-674-1176	S1620-61204-14 <78286>	...PIN,CARGO DOOR.....		EA		1	*	2	2		*	48	21
P	F		1560-567-9841	S1620-61204-5 <78286>	...BEARING,SLEEVE.....		EA		1	*	*	2		*	48	22
				MS20426B3 <96906>	...RIVET.....		EA		2						48	23
					---*---											
P	F		1680-570-0592	S1620-61204-1 <78286>	...HANDLE ASSEMBLY,CARGO DOOR		EA		1	*	2	2		*	48	24
P	F		1560-326-3420	S1620-61204-2 <78286>	...LATCH ASSEMBLY,DOOR.....		EA		1	*	2	2		*	48	25
P	F		1560-697-0506	S1620-61204-6 <78286>	...BEARING,SLEEVE.....		EA		1	*	*	2		*	48	26
				S1620-61204-4 <78286>	...LINER.....		EA		1						48	28
			5315-954-6841	AN385A40P8 <88044>	...PIN,TAPERED,PLAIN.....		EA		1	*	*	*		*	48	
				MS15985-8R8 <96906>	..SCREW,SELF-LOCKING.....		EA		25						48	31
			5310-188-7971	MS27130-16K <96906>	..NUT,BLIND RIVET.....		EA		25					*	48	32
			5330-948-9886	S1620-61201-24 <78286>	..FELT,MECHANICAL PREFORMED..		EA		1	*	*	*			48	33
P	O		1560-711-4581	S1620-61201-23 <78286>	..CHANNEL,CABIN.....		EA		1	*	2	2		*	48	34
MF	F			S14-20-2640-18 <78286>	..BUMPER.....		EA		1						48	35
					MAKEFR											
					AR 9320-641-7084 RBR SH,SLD											
P	O		1560-348-9884	S14-20-2640-13 <78286>	..SPRING,CABIN DOORSTOP.....		EA		1	2	3	5		*	48	36
					ATTACHING PARTS											
			5306-182-1899	AN3H12 <88044>	..BOLT,MACHINE.....		HD		2	*	*	*		*	48	37
			5310-183-4406	AN960PD10 <88044>	..WASHER,FLAT.....		HD		4	*	*	*		*	48	
			5310-877-5797	MS21044N3 <96906>	..NUT,SELF-LOCKING,HEXAGON...		EA		2	*	*	*		*	48	
					---*---											
P	F		1560-446-6390	S1620-61201-17 <78286>	..PLATE ASSEMBLY.....		EA		1	*	*	*		*	48	40
					ATTACHING PARTS											
P	F		5320-239-1286	P4F <29666>	..RIVET,BLIND.....		EA		26	*	*	*		REF	48	41
					---*---											
			5305-844-9888	MS24621-15 <96906>	..SCREW,TAPPING,THREAD,.....				30	*	*	*		*	48	42

(1) SOURCE, MAINT AND REC CODE (a) SOURCE CODE	(b) MAINT LEVEL	(c) REC CODE	(2) FEDERAL STOCK NUMBER	REFERENCE NUMBER	(3) DESCRIPTION	MODELS USABLE ON CH-34C	(4) UNIT OF ISSUE	(5) QTY INC IN UNIT PACK	(6) QTY INC IN UNIT	(7) 30-DAY DS GS MAINT ALW (a) 1-20	(b) 21-50	(c) 51-100	(8) 1-YR ALW PER 100 EQUIP CNTGCY	(9) DEPOT MAINT ALW PER 100 EQUIP	(10) ILLUSTRATION (a) FIG NO	(b) ITEM NO
					CONTINUED										48	42
					FORMING											
			1560-327-3856	S1620-61201-9 <78286>	..STRIP,CABIN,WEATHER.....										48	
					RPL-BY PN S1620-61201-40											
MF	F			S1620-61201-40 <78286>	...WEATHER STRIP,DOOR.....		EA		1						48	44
					ASSEMBLY RPLS--											
					1560-327-3856											
					MAKEFR											
					AR 9320-241-9754 RBR SH SLD											
				S1620-61201-42 <78286>	...SPLICE,DOOR ASSEMBLY.....		EA		1						48	
P	F		1560-633-6951	S1620-61201-44 <78286>	..SEAL,DOOR ASSEMBLY.....		EA		1	*	2	2		*	48	45
MF	F			S14-20-2663-13 <78286>	..PIN,TAPERED,THREADED.....		EA		1						48	
					MAKEFR											
					1 EA 5315-198-8091 PIN											
MF	F			S1620-61248-6 <78286>	..GUSSET,DOOR OPENING.....		EA		1						48	
					ASSEMBLY											
					MAKEFR											
					AR 9535-554-1415 AL ALLY SH											
				S1620-62302 <78286>	BOTTOM STRUCTURE.....										49	
					INSTALLATION USBL EFF											
					53-4475 THRU 55-4504 SEE											
					FIG.41 FOR NHA											
				S1620-62325 <78286>	STRUCTURE INSTALLATION.....										49	
					BOTTOM USBL EFF 56-4284											
					& SUBSEQUENT SEE FIG.41											
					FOR NHA											
				S1620-62302-1 <78286>	.STRUCTURE ASSEMBLY-BOTTOM...		EA		1						49	
				S1620-62325-1 <78286>	.STRUCTURE ASSEMBLY-BOTTOM...		EA		1						49	
X2	F		1560-949-5466	S1620-62007-1 <78286>	..KEEL BEAM ASSEMBLY.....		EA		1	*	*	*		*	49	
X2	F			S1620-62007-2 <78286>	..KEEL BEAM ASSEMBLY.....		EA		1						49	
				S1620-61348-2 <78286>	.ADAPTER INSTALLATION-.....				1						49	
					BOTTOM STRUCTURE											
X2	F			S1620-61348-4 <78286>	..ADAPTER,OIL SUMP.....		EA		1						49	
X2	F		1560-991-3246	S1620-61420-1 <78286>	..FRAME ASSEMBLY.....		EA		1	*	*	*		*	49	
X2	F		1560-983-0496	S1620-61415-7 <78286>	..TEE.....		EA		1	*	*	*		*	49	
X2	F		1560-981-3029	S1620-61415-5 <78286>	..TEE.....		EA		1	*	*	*		*	49	
				S1620-61020-1 <78286>	..STEP INSTALLATION-RH ONLY..				1						49	
			1560-632-9104	S1620-61020-23 <78286>	...STEP ASSEMBLY,BOTTOM.....		EA		1						49	1
					STRUCTURE											
					OBS-AFT-CMPL-W											
					TM1-1H-34A-1013											
					ATTACHING PARTS											
			5306-182-2058	AN3H5A <88044>	...BOLT,MACHINE.....		EA		4	*	*	*		*	49	2
			5310-167-0818	AN960-10 <88044>	...WASHER,FLAT.....		HD		3	*	*	*		*	49	
			5306-182-2058	AN3H5A <88044>	..BOLT,MACHINE.....		EA		4	*	*	*		*	49	2
			5306-182-[illegible]	AN3H10A <88044>	..BOLT,MACHINE.....		EA		1							

(1) SOURCE, MAINT AND REC CODE (a) SOURCE CODE	(b) MAINT LEVEL	(c) REC CODE	(2) FEDERAL STOCK NUMBER	REFERENCE NUMBER		(3) DESCRIPTION	MODELS USABLE ON CH-34C	(4) UNIT OF ISSUE	(5) QTY INC IN UNIT PACK	(6) QTY INC IN UNIT	(7) 30 DAY DS GS MAINT ALW (a) 1-20	(b) 21-50	(c) 51-100	(8) 1-YR ALW PER 100 EQUIP CNTGCY	(9) DEPOT MAINT ALW PER 100 EQUIP	(10) ILLUSTRATION (a) FIG NO	(b) ITEM NO
			5310-167-0818	AN960-10	<88044>	...WASHER,FLAT..... ---*---		HD		2	*	*	*		*	49	
				S1620-62324	<78286>	.PLATING INSTALLATION U/O... PN S1620-62325				1						49	
MF	F			S1620-62304-14	<78286>	..PLATE,BOTTOM STRUCTURE..... MAKEFR AR 9535-554-1411 AL ALLY SH		EA		1						49	
				S1620-61020-18	<78286>	..NUT AND DOUBLER..... INSTALLATION				1						49	
			5310-728-5510	MS21078-3	<96906>	...NUT,SELF-LOCKING,PLATE.... ATTACHING PARTS		EA		4	*	*	*		*	49	6
			5320-117-7289	MS20426AD6-9	<96906>	...RIVET,SOLID..... ---*---		LB		2	*	*	*		*	49	
MF	F			S1620-61020-20	<78286>	...DOUBLER..... MAKEFR AR 9535-554-1412 AL ALLY SH		EA		1						49	7
				S1620-61020-2	<78286>	..SUPPORT INSTALLATION-LH....				1						49	
P	O		1560-632-9105	S1620-61020-24	<78286>	...SUPPORT ASSEMBLY,BOTTOM... STRUCTURE ATTACHING PARTS		EA		1	*	*	*		*	49	8
			5306-182-2058	AN3H5A	<88044>	...BOLT,MACHINE.....		EA		4	*	*	*		*	49	9
			5306-182-2061	AN3H10A	<88044>	...BOLT,MACHINE.....		HD		2	*	*	*		*	49	10
			5310-167-0818	AN960-10	<88044>	...WASHER,FLAT..... ---*---		HD		6	*	*	*		*	49	
			5340-709-1680	NAS43HT8-36	80205	...SPACER,SLEEVE.....		EA		1	*	*	*		*		
				S1620-61020-17	<78286>	..NUT AND DOUBLER..... INSTALLATION				1						49	
			5310-728-5510	MS21078-3	<96906>	...NUT,SELF-LOCKING,PLATE.... ATTACHING PARTS		EA		6	*	*	*		*	49	12
			5320-117-7289	MS20426AD6-9	<96906>	...RIVET,SOLID..... ---*---		LB		2	*	*	*		*	49	
				S1620-61890	<78286>	..FAIRING INSTALLATION..... EMERGENCY FUEL LINES U/O PN S1620-62302				1						49	
				S1620-62005	<78286>	..FAIRING INSTALLATION..... EMERGENCY FUEL LINES U/O PN S1620-62325				1						49	
P	O		1560-508-7706	S1620-61890-8	<78286>	...FAIRING,EMERGENCY FUEL.... ATTACHING PARTS		EA		1	*	*	2		*	49	14
			5305-180-0010	AN525-10R8	<88044>	...SCREW,MACHINE U/O..... PN S1620-61890		HD		4	*	*	*		*	49	15
			5310-167-0753	AN960PD10L	<88044>	...WASHER,FLAT..... ---*---		HD		4	*	*	*		*	49	
P	O		1560-508-7697	S1620-61890-7	<78286>	...FAIRING,EMERGENCY FUEL.... RPLS-- 1560-575-2021 U/O PN S1620-61890		EA		1	*	*	2		*	49	16
P	O		1560-587-9383	S1620-62005-6	<78286>	...FAIRING,BOTTOM STRUCTURE.. U/O PN S1620-62005 ATTACHING PARTS		EA		1	*	*	*		*	49	
			5305-180-0010	AN525-10R8	<88044>	...SCREW,MACHINE U/O..... 1560-508-7697		HD		2	*	*	*		*	49	17
			5310-167-0753	AN960PD10L	<88044>	...WASHER,FLAT.....		HD		2	*	*	*		*	49	

(1) SOURCE, MAINT AND REC CODE (a) SOURCE CODE	(b) MAINT LEVEL	(c) RECOV CODE	(2) FEDERAL STOCK NUMBER	(3) DESCRIPTION REFERENCE NUMBER			MODELS USABLE ON CH-34C	(4) UNIT OF ISSUE	(5) QTY INC IN UNIT PACK	(6) QTY INC IN UNIT	(7) 30-DAY DS GS MAINT ALW (a) 1-20	(b) 21-50	(c) 51-100	(8) 1-YR ALWPER 100 EQUIP CNTGCY	(9) DEPOT MAINT ALWPER 100 EQUIP	(10) ILLUSTRATION (a) FIG NO	(b) ITEM NO
						CONTINUED										49	
						---*---											
P	O		1560-508-7576	S1620-61890-6	<78286>	...FAIRING,EMERGENCY FUEL.... LINE U/O PN S1620-61890		EA		1	*	*	2		*	49	18
P	O		1560-587-9382	S1620-62005-5	<78286>	...FAIRING,BOTTOM STRUCTURE.. U/O PN S1620-62005 ATTACHING PARTS		EA		1	*	*	*		*	49	
			5305-180-0010	AN525-10R8	<88044>	...SCREW,MACHINE U/O..... 1560-508-7576		HD		2	*	*	*		*	49	19
			5305-180-0010	AN525-10R8	<88044>	...SCREW,MACHINE U/O..... 1560-508-7576		HD		2	*	*	*		*	49	20
			5305-619-2261	NK525-10-10	<02615>	...SCREW U/O 1560-587-9382..		EA		2	*	*	*			49	
			5310-167-0753	AN960PD10L	<88044>	...WASHER,FLAT.....		HD		4	*	*	*		*	49	
						---*---											
P	O		1560-508-7572	S1620-61890-5	<78286>	...FAIRING,EMERGENCY FUEL.... LINE U/O PN S1620-61890		EA		1	*	*	2		*	49	21
P	O		1560-587-9381	S1620-62005-4	<78286>	...FAIRING,BOTTOM STRUCTURE.. U/O PN S1620-62005 ATTACHING PARTS		EA		1	*	*	*		*	49	
			5305-180-0010	AN525-10R8	<88044>	...SCREW,MACHINE U/O..... 1560-508-7572		HD		2	*	*	*		*	49	22
			5305-180-0010	AN525-10R8	<88044>	...SCREW,MACHINE U/O..... 1560-508-7572		HD		2	*	*	*		*	49	23
			5310-167-0753	AN960PD10L	<88044>	...WASHER,FLAT.....		HD		4	*	*	*		*	49	
						---*---											
P	O		1560-508-7447	S1620-61890-1	<78286>	...FAIRING,EMERGENCY FUEL.... LINE ATTACHING PARTS		EA		1	*	2	2		*	49	24
			5305-180-0010	AN525-10R8	<88044>	...SCREW,MACHINE.....		HD		2	*	*	*		*	49	25
				NK525-10-8	<02615>	...SCREW.....		EA		2						49	
			5310-167-0753	AN960PD10L	<88044>	...WASHER,FLAT.....		HD		2	*	*	*		*	49	
						---*---											
P	O		1560-508-7571	S1620-61890-4	<78286>	...FAIRING,EMERGENCY FUEL.... LINE U/O PN S1620-61890		EA		1	*	*	*		*	49	26
P	O		1560-587-9380	S1620-62005-3	<78286>	...FAIRING,BOTTOM STRUCTURE.. U/O PN S1620-62005 ATTACHING PARTS		EA		1	*	*	*		*	49	
			5305-180-0010	AN525-10R8	<88044>	...SCREW,MACHINE U/O..... 1560-508-7571		HD		3	*	*	*		*	49	27
			5305-655-5779	NK525-10-9	<02615>	...SCREW U/O 1560-587-9380..		EA		3	*	*	*			49	
			5305-180-0010	AN525-10R8	<88044>	...SCREW,MACHINE U/O..... 1560-508-7571		HD		3	*	*	*		*	49	28
				NK525-10-8	<02615>	...SCREW U/O 1560-587-9380..		EA		3						49	
			5310-167-0753	AN960PD10L	<88044>	...WASHER,FLAT.....		HD		6	*	*	*		*	49	
						---*---											
P	O		1560-508-7570	S1620-61890-3	<78286>	...FAIRING,EMERGENCY FUEL.... LINE U/O PN S1620-61890 ATTACHING PARTS		EA		1	*	*	2		*	49	29
			5305-180-0010	AN525-10R8	<88044>	...SCREW,MACHINE.....		HD		6	*	*	*		*	49	30
			5310-167-0753	AN960PD10L	<88044>	...WASHER,FLAT.....		HD		6	*	*	*		*	49	
						---*---											
P	O		1560-508-7569	S1620-61890-2	<78286>	...FAIRING,EMERGENCY FUEL....		EA		1	*	*	2		*	49	31

(1) SOURCE, MAINT AND REC CODE (a) SOURCE CODE	(b) MAINT LEVEL	(c) REC CODE	(2) FEDERAL STOCK NUMBER	REFERENCE NUMBER	(3) DESCRIPTION	MODELS USABLE ON CH-34C	(4) UNIT OF ISSUE	(5) QTY INC IN UNIT PACK	(6) QTY INC IN UNIT	(7) 30-DAY DS/GS MAINT ALW (a) 1-20	(b) 21-50	(c) 51-100	(8) 1-YR ALW PER 100 EQUIP CNTGCY	(9) DEPOT MAINT ALW PER 100 EQUIP	(10) ILLUSTRATION (a) FIG NO	(b) ITEM NO
					CONTINUED										49	31
					LINE U/O PN S1620-61890											
P	O		1560-587-9379	S1620-62005-2 <78286>	...FAIRING,BOTTOM STRUCTURE..		EA		1	*	*	*		*	49	
					U/O PN S1620-62005											
					ATTACHING PARTS											
			5305-180-0010	AN525-10R8 <88044>	...SCREW,MACHINE U/O.....		HD		2	*	*	*		*	49	32
					1560-508-7569											
			5305-180-0012	AN525-10R10 <88044>	...SCREW,MACHINE U/O.....		HD		2	*	*	*		*	49	33
					1560-508-7569											
			5305-619-2261	NK525-10-10 <02615>	...SCREW U/O 1560-587-9379..		EA		2	*	*	*			49	
			5310-167-0753	AN960PD10L <88044>	...WASHER,FLAT.....		HD		6	*	*	*		*	49	
					---*---											
P	O		1560-508-7447	S1620-61890-1 <78286>	...FAIRING,EMERGENCY FUEL....		EA		1	*	REF	REF		REF	49	35
					LINE											
					ATTACHING PARTS											
			5305-180-0010	AN525-10R8 <88044>	...SCREW,MACHINE U/O.....		HD		2	*	*	*		*	49	36
					PN S1620-61890											
			5310-167-0753	AN960PD10L <88044>	...WASHER,FLAT.....		HD		2	*	*	*		*	49	
					---*---											
			1560-508-9604	S1620-61890-9 <78286>	...FAIRING,EMERGENCY FUEL....		EA			*	*	*			49	
					LINE OBS-BY											
					1560-611-5911											
P	O		1560-611-5911	S1620-61890-10 <78286>	...FAIRING,EMERGENCY FUEL....		EA		1	*	*	*		*	49	37
					LINE OBS-BY											
					1560-508-9604											
					ATTACHING PARTS											
				MS20470B4 <96906>	...RIVET,SOLID.....		EA		36						49	38
					---*---											
				S1620-61406-1 <78286>	..FLOOR INSTALLATION.....				1						49	
					FORWARD RIVETED											
X2	F			S1620-61406-9 <78286>	...FLOOR.....		EA		1						49	39
				S1620-61406-3 <78286>	..FLOOR INSTALLATION-AFT.....				1						49	
				S1620-61406-25 <78286>	...CLIP-LH.....		EA		1						49	
				S1620-61406-7 <78286>	...DOOR ASSEMBLY.....		EA		1						49	
X2	F			S1620-61406-5 <78286>	...FLOOR ASSEMBLY-LH.....		EA		1						49	
X2	F		1560-566-2403	S1620-61406-6 <78286>	...FLOOR ASSEMBLY,FUSELAGE-RH		EA		1	*	*	*		*	49	
P	F		5305-546-6930	559 <61864>	....SCREW,MACHINE.....		EA		3	*	*	*		REF	49	42
			5340-716-8061	NAS43HT3-128 <80205>	....SPACER,SLEEVE.....		EA		3	*	*	*		*	49	43
			5325-174-2923	AN227-8 <88044>	....STUD,SNAP FASTENER.....		EA		3	*	*	*		*	49	45
X2	F			S1620-61406-27 <78286>	....ANGLE.....		EA		2						49	48
X2	F			S1620-61406-19 <78286>	....STIFFENER.....		EA		4						49	49
					ATTACHING PARTS											
X2	F			S1620-61406-25 <78286>	...CLIP-LH.....		EA		1						49	50
					---*---											
X2	F			S1620-61406-26 <78286>	...CLIP-RH.....		EA		1						49	
X2	F			S1620-66792-25 <78286>	...CLIP.....		EA		1						49	53
X2	F			S1620-66792-24 <78286>	...CLIP.....		EA		1						49	54
X2	F		1560-676-3428	S1620-62102-11 <78286>	..SKIN PANEL,FUSELAGE.....		EA		1	*	*	*		*	49	
				S1620-62095-1 <78286>	..SKIN INSTALLATION-INNER....				1						49	
				S1620-62095-2 <78286>	..SKIN INSTALLATION-INNER....				1						49	
MF	F			S1620-62095-3 <78286>	...SKIN U/O PN S1620-62095-1		EA		1						49	55
					MAKEFR											

(1) SOURCE, MAINT AND REC CODE (a) SOURCE CODE	(b) MAINT LEVEL	(c) REC CODE	(2) FEDERAL STOCK NUMBER	REFERENCE NUMBER	(3) DESCRIPTION	MODELS USABLE ON CH-34C	(4) UNIT OF ISSUE	(5) QTY INC IN UNIT PACK	(6) QTY INC IN UNIT	(7) 30-DAY DS/GS MAINT ALW (a) 1-20	(b) 21-50	(c) 51-100	(8) 1-YR ALW PER 100 EQUIP CNTGCY	(9) DEPOT MAINT ALW PER 100 EQUIP	(10) ILLUSTRATION (a) FIG NO	(b) ITEM NO
					CONTINUED										49	55
					AR 9535-167-2278 AL ALLY SH											
MF	F			S1620-62095-4 <78286>	...SKIN U/O PN S1620-62095-2		EA		1						49	
					MAKEFR											
					AR 9535-167-2278 AL ALLY SH											
X2	F			S1620-62095-11 <78286>	...SPOTWELD ASSEMBLY,FUSELAGE		EA		1						49	
				S1620-61004 <78286>	..FLOOR ASSEMBLY.....		EA		1	*	*	*		*	49	
P	F		1560-563-2710	S1620-61004-1 <78286>	...FLOOR ASSEMBLY.....		EA		1	*	*	*		*	49	55A
					ATTACHING PARTS											
			5306-559-8135	AN3DDH7A <88044>	...BOLT,MACHINE.....		EA		83	*	*	*		*	49	55B
			5306-559-8133	AN3DDH10A <88044>	...BOLT,MACHINE.....		EA		10	*	*	*		*	49	
			5310-183-4406	AN960PD10 <88044>	...WASHER,FLAT.....		HD		10	*	*	*		*	49	
					---*---											
P	F		1670-180-5309	AN7516-1 <88044>	...ADAPTER,TIE DOWN,.....		EA		5	*	*	*		*	49	56
					AIRCRAFT FLOOR											
				S1620-61005 <78286>	..FLOOR INSTALLATION-CARGO...										49	60
				S1620-62328 <78286>	..FLOOR INSTALLATION-CARGO...										49	
P	F		1670-180-5309	AN7516-1 <88044>	...ADAPTER,TIE DOWN,.....		EA		9	*	*	*		REF	49	61
					AIRCRAFT FLOOR											
					ATTACHING PARTS											
P	F		5320-269-9415	NAS1526-8 <80205>	...PIN,RIVET.....		EA		36	*	*	*		*	49	62
			5320-286-4630	NAS1080D6 <80205>	...COLLAR,PIN RIVET.....		EA		36	*	*	*		*	49	
P	F		5310-477-8775	140-58228 <43999>	...WASHER,FLAT.....		EA		36	*	*	*		REF	49	63
					---*---											
X2	F			S1650-61330 <78286>	...FITTING,TIE DOWN.....		EA		1						49	64
					ATTACHING PARTS											
P	F		5320-269-9415	NAS1526-8 <80205>	...PIN,RIVET.....		EA		5	*	*	*		REF	49	65
			5320-286-4630	NAS1080D6 <80205>	...COLLAR,RIVET PIN.....		EA		5	*	*	*		*	49	
P	F		5310-477-8775	140-58228 <43999>	...WASHER,FLAT.....		EA		5	*	*	*		REF	49	66
					---*---											
			1560-563-9844	S1620-61005-1 <78286>	...FLOOR ASSEMBLY RPL-BY....										49	
					1560-544-0950											
P	F		1560-544-0950	S1620-62328-1 <78286>	...FLOOR ASSEMBLY RPLS--....		EA		1	*	2	2		*	49	67
					1560-563-9844											
					ATTACHING PARTS											
			5306-559-8135	AN3DDH7A <88044>	...BOLT,MACHINE.....		EA		193	*	*	*		*	49	
					---*---											
MF	F			S1620-61005-10 <78286>	....DOUBLER U/O.....		EA		1						49	68
					1560-563-9844											
					MAKEFR											
					AR 9535-554-1412 AL ALLY SH											
				S1620-62328-10 <78286>	....DOUBLER U/O.....		EA		1						49	
					PN S1620-62328-1											
					ATTACHING PARTS											
			5306-559-8135	AN3DDH7A <88044>	....BOLT,MACHINE.....		EA		3	*	*	*		*	49	
					---*---											
				S1620-62329 <78286>	..COVER INSTALLATION.....				1						49	
					OBSERVATION WINDOW											
AF	F			S1620-62329-1 <78286>	...COVER ASSEMBLY.....		EA		1						49	69
					ATTACHING PARTS											
			5306-559-8135	AN3DDH7A <88044>	...BOLT MACHINE.....		EA		5	*	*	*		*	49	
					---*---											

(1) SOURCE, MAINT AND REC CODE (a) SOURCE CODE	(b) MAINT LEVEL	(c) REC CODE	(2) FEDERAL STOCK NUMBER	REFERENCE NUMBER		(3) DESCRIPTION	MODELS USABLE ON CH-34C	(4) UNIT OF ISSUE	(5) QTY INC IN UNIT PACK	(6) QTY INC IN UNIT	(7) 30-DAY DS GS MAINT ALW (a) 1-20	(b) 21-50	(c) 51-100	(8) 1-YR ALW PER 100 EQUIP CNTGCY	(9) DEPOT MAINT ALW PER 100 EQUIP	(10) ILLUSTRATION (a) FIG NO	(b) ITEM NO
X2	F			S1620-62329-2	<78286>	....PANEL ASSEMBLY.....		EA		1						49	
P	F		5325-298-6999	2600-15	<71286>	....STUD ASSEMBLY,TURNLOCK... FASTENER		EA		2	*	*	*		*	49	
X2	F			S1620-62329-6	<78286>	...HINGE..... ATTACHING PARTS		EA		1						49	70
P	F		5320-286-4704	CKLP5K	<29666>	...RIVET.....		EA		11	*	*	*		*	49	
P	F		5320-038-3382	CKLP5L	<29666>	...RIVET.....		EA		2	*	*	*		*	49	
						---*---											
				S1620-62103	<78286>	..SKIN INSTALLATION-INNER....				1						49	
			1560-570-0607	S1620-62103-3	<78286>	...SKIN RPL-BY..... 1560-675-5778										49	
P	F		1560-675-5778	S1620-62103-7	<78286>	...SKIN RPLS--..... 1560-570-0607		EA		1	*	*	*		*	49	71
			1560-570-0612	S1620-62103-4	<78286>	...SKIN OBS-BY..... 1560-675-5779		EA			*	*	*			49	
P	F		1560-675-5779	S1620-62103-8	<78286>	...SKIN OBSLTS..... 1560-570-0612		EA		1	*	*	*		*	49	72
			1560-570-0601	S1620-62103-1	<78286>	...SKIN-LH RPL-BY..... 1560-675-5776										49	
P	F		1560-675-5776	S1620-62103-5	<78286>	...SKIN-LH RPLS--..... 1560-570-0601		EA		1	*	*	*		*	49	73
			1560-575-2025	S1620-61498-2	<78286>	...SKIN-RH RPL-BY..... 1560-675-5777										49	
			1560-570-0606	S1620-62103-2	<78286>	...SKIN-RH RPL-BY..... 1560-675-5777										49	
P	F		1560-675-5777	S1620-62103-6	<78286>	...SKIN,FUSELAGE BOTTOM..... STRUCTURE RPLS-- 1560-570-0606, 1560-575-2025		EA		1	*	*	*		*	49	
				S1620-61006	<78286>	..FLOOR INSTALLATION.....				1						49	
X2	F		1560-544-0933	S1620-61006-1	<78286>	...FLOOR ASSEMBLY..... ATTACHING PARTS		EA		1	*	*	*		*	49	
			5306-559-8135	AN3DDH7A	<88044>	...BOLT,MACHINE.....		EA		87	*	*	*		*	49	
P	F		1670-180-5309	AN7516-1	<88044>	...ADAPTER,TIE DOWN,..... AIRCRAFT FLOOR		EA		2	*	*	*		REF	49	74
			5306-559-8135	AN3DDH7A	<88044>	...BOLT,MACHINE.....		EA		3	*	*	*		*	49	75
P	F		1670-180-5309	AN7516-1	<88044>	...ADAPTER,TIE DOWN,..... AIRCRAFT FLOOR ATTACHING PARTS		EA		9	*	*	*		REF	49	77
			5320-205-8511	ALPPHE6-9	<29666>	...PIN,RIVET.....		EA		4	*	*	*			49	78
			5320-286-4630	NAS1080D6	<80205>	...COLLAR,RIVET PIN.....		EA		4	*	*	*		*	49	
P	F		5310-477-8775	140-58228	<43999>	...WASHER,FLAT.....		EA		4	*	*	*		REF	49	79
						---*---											
				S1620-61007	<78286>	..FLOOR INSTALLATION.....				1						49	
P	F		1560-544-0934	S1620-61007-1	<78286>	...FLOOR ASSEMBLY..... ATTACHING PARTS		EA		1	*	*	*		*	49	
			5306-559-8135	AN3DDH7A	<88044>	...BOLT,MACHINE.....		EA		121	*	*	*		*	49	
			5306-559-8133	AN3DDH10A	<88044>	...BOLT,MACHINE.....		EA		21	*	*	*		*	49	
			5306-292-5204	AN4DDH7A	<88044>	...BOLT,MACHINE.....		EA		5	*	*	*		*	49	
						---*---											
P	F		1670-180-5309	AN7516-1	<88044>	...ADAPTER,TIE DOWN,..... AIRCRAFT FLOOR		EA		7	*	*	*		REF	49	80

(1) SOURCE, MAINT AND REC CODE (a) SOURCE CODE	(b) MAINT CATEGORY	(c) REC CODE	(2) FEDERAL STOCK NUMBER	REFERENCE NUMBER		(3) DESCRIPTION	MODELS USABLE ON CH-34C	(4) UNIT OF ISSUE	(5) QTY INC IN UNIT PACK	(6) QTY INC IN UNIT	(7) 30-DAY DS/GS MAINT ALW (a) 1-20	(b) 21-50	(c) 51-100	(8) 1-YR ALW PER 100 EQUIP CNTGCY	(9) DEPOT MAINT ALW PER 100 EQUIP	(10) ILLUSTRATION (a) FIG NO	(b) ITEM NO
						CONTINUED										49	80
						ATTACHING PARTS											
			5306-559-8135	AN3DDH7A	<88044>	...BOLT,MACHINE.....		EA		2	*	*	*		*	49	81
P	F		5310-477-8775	140-58228	<43999>	...WASHER,FLAT.....		EA		4	*	*	*		REF	49	82
			5320-286-4630	NAS1080D6	<80205>	...COLLAR,RIVET PIN.....		EA		4	*	*	*		*	49	83
						---*---											
MF	F			S1620-61414-6	<78286>	...CLIP,BOTTOM.....		EA		1						49	
						MAKEFR											
						AR 9535-249-5811 AL ALLY SH											
				S1620-62323	<78286>	..SKELETON ASSEMBLY.....		EA		1						49	
X1			1560-304-4607	S1620-61456	<78286>	....FITTING,FUSELAGE BOTTOM..		EA		1	*	*	*			49	
				S1620-63220	<78286>	..CATWALK INSTALLATION.....				1						49	
X2	F		1560-340-1352	S1620-63220-1	<78286>	...CATWALK ASSEMBLY.....		EA		1	*	*	*		*	49	83A
						ATTACHING PARTS											
			5305-206-1201	AN525-10R14	<88044>	...SCREW,MACHINE.....		HD		10	*	*	*		*	49	
			5310-167-0753	AN960PD10L	<88044>	...WASHER,FLAT.....		HD		10	*	*	*		*	49	
						---*---											
			1560-570-0595	S1620-61450-1	<78286>	...FITTING ASSEMBLY.....		EA			*	*	*			49	
						OBS-BY 1560-323-4353											
P	F		1560-323-4353	S1620-62050-1	<78286>	...FITTING ASSEMBLY-MAIN.....		EA		1	*	*	*		*	49	84
						LANDING GEAR OBSLTS											
						1560-570-0595											
			1560-336-0756	S1620-61450-2	<78286>	...FITTING ASSEMBLY-MAIN.....										49	
						LANDING GEAR RPL-BY											
						1560-323-4354											
P	F		1560-323-4354	S1620-62050-2	<78286>	...FITTING ASSEMBLY-MAIN.....		EA		1	*	*	*		*	49	
						LANDING GEAR RPLS--											
						1560-336-0756											
X1				S1620-61453-1	<78286>	....BEARING,SLEEVE-LH.....		EA		1						49	85
X1				S1620-61453-2	<78286>	....BEARING,SLEEVE-RH WHEN..		EA		1						49	
						EXHTD RQTN NHA											
						1560-323-4353											
P	H		1650-523-4941	S1620-61457	<78286>	...BEARING,SLEEVE.....		EA		1	*	*	*		*	49	
P	F		5315-559-5659	S1620-61454	<78286>	....KEY,MACHINE.....		EA		4	*	*	*		*	49	86
				S1620-62331	<78286>	...SUPPORT INSTALLATION.....				1						49	87
						OBSERVATION WINDOW											
X2	F			S1620-62331-10	<78286>	....RETAINER.....		EA		1						49	88
						ATTACHING PARTS											
			5305-180-0014	AN525-10R12	<88044>	....SCREW,MACHINE.....		HD		20	*	*	*		*	49	89
			5310-167-0753	AN960PD10L	<88044>	....WASHER,FLAT.....		HD		20	*	*	*		*	49	
						---*---											
P	F		1560-633-0884	S1620-62332	<78286>	....WINDOW ASSEMBLY,BOTTOM...		EA		1	*	2	2		*	49	90
						STRUCTURE											
				S1620-62310	<78286>	..SIDE PANEL INSTALLATION....				1						49	
						BOTTOM STRUCTURE											
			1560-508-9712	S1620-62311-1	<78286>	...PANEL OBS-BY.....		EA			*	*	*			49	
						1560-675-5780											
P	F		1560-675-5780	S1620-62311-11	<78286>	...PANEL,BOTTOM STRUCTURE....		EA		2	*	*	*		*	49	93
						SIDE OBSLTS											
						1560-508-9712											
						ATTACHING PARTS											
P	F		5320-945-8982	201-141131-00-0103	<30323>	...RIVET-PLASTIC.....		EA		AR	*	*	*		*	49	94

(1) SOURCE, MAINT AND REC CODE (a) SOURCE CODE	(b) MAINT LEVEL	(c) REC CODE	(2) FEDERAL STOCK NUMBER	REFERENCE NUMBER		(3) DESCRIPTION	MODELS USABLE ON CH-34C	(4) UNIT OF ISSUE	(5) QTY INC IN UNIT PACK	(6) QTY NC IN UNIT	(7) 30-DAY DS GS MAINT ALW (a) 1-20	(b) 21-50	(c) 51-100	(8) 1-YR ALW PER 100 EQUIP CNTGCY	(9) DEPOT MAINT ALW PER 100 EQUIP	(10) ILLUSTRATION (a) FIG NO	(b) ITEM NO
MF	F			S1620-62312	<78286>	...SPACER,SLEEVE.....NOTE1 ---*---		EA		AR						49	95
			1560-509-0434	S1620-62311-2	<78286>	...PANEL RPL-BY..... 1560-956-2944										49	
			1560-675-5781	S1620-62311-12	<78286>	...PANEL,BOTTOM STRUCTURE.... SIDE OBS-BY 1560-956-2944										49	
P	F		1560-956-2944	S1620-62311-21	<78286>	...PANEL,BOTTOM STRUCTURE.... RPLS-- 1560-509-0434 OBSLTS 1560-675-5781 ATTACHING PARTS		EA		2	*	*	*		*	49	96
P	F		5320-945-8982	201-141131-00-0103	<30323>	...RIVET-PLASTIC.....		EA		AR	*	*	*		REF	49	97
MF	F			S1620-62312	<78286>	...SPACER,SLEEVE.....NOTE1 ---*---		EA		AR						49	98
			1560-509-0435	S1620-62311-3	<78286>	...PANEL RPL-BY..... 1560-675-5782										49	
P	F		1560-675-5782	S1620-62311-13	<78286>	...PANEL,BOTTOM STRUCTURE.... SIDE RPLS-- 1560-509-0435 ATTACHING PARTS		EA		2	*	*	*		*	49	99
P	F		5320-945-8982	201-141131-00-0103	<30323>	...RIVET-PLASTIC.....		EA		AR	*	*	*		REF	49	100
MF	F			S1620-62312	<78286>	...SPACER,SLEEVE.....NOTE1 ---*---		EA		AR						49	101
			1560-509-0446	S1620-62311-4	<78286>	...PANEL RPL-BY..... 1560-675-5783										49	
P	F		1560-675-5783	S1620-62311-14	<78286>	...PANEL,BOTTOM STRUCTURE.... SIDE RPLS-- 1560-509-0446 ATTACHING PARTS		EA		2	*	*	*		*	49	102
P	F		5320-945-8982	201-141131-00-0103	<30323>	...RIVET-PLASTIC.....		EA		AR	*	*	*		REF	49	103
MF	F			S1620-62312	<78286>	...SPACER,SLEEVE.....NOTE1 ---*---		EA		AR						49	104
			1560-509-0448	S1620-62311-5	<78286>	...PANEL RPL-BY..... 1560-675-5784										49	
P	F		1560-675-5784	S1620-62311-15	<78286>	...PANEL,BOTTOM STRUCTURE.... SIDE RPLS-- 1560-509-0448 ATTACHING PARTS		EA		2	*	*	*		*	49	105
P	F		5320-945-8982	201-141131-00-0103	<30323>	...RIVET-PLASTIC.....		EA		AR	*	*	*		REF	49	106
MF	F			S1620-62312	<78286>	...SPACER,SLEEVE.....NOTE1 ---*---		EA		AR						49	107
P	F		1560-675-5785	S1620-62311-16	<78286>	...PANEL,BOTTOM STRUCTURE.... SIDE RPLS-- 1560-509-0454 ATTACHING PARTS		EA		2	*	*	*		*	49	108
P	F		5320-945-8982	201-141131-00-0103	<30323>	...RIVET-PLASTIC.....		EA		AR	*	*	*		REF	49	109
MF	F			S1620-62312	<78286>	...SPACER,SLEEVE.....NOTE1 ---*---		EA		AR						49	110
			1560-675-5786	S1620-62311-17	<78286>	...PANEL RPL-BY..... 1560-509-0467										49	
P	F		1560-509-0467	S1620-62311-7	<78286>	...PANEL,BOTTOM STRUCTURE.... SIDE RPLS--		EA		1	*	*	*		*	49	111

(1) SOURCE, MAINT AND REC CODE (a) SOURCE CODE	(b) MAINT LEVEL	(c) REC CODE	(2) FEDERAL STOCK NUMBER	REFERENCE NUMBER	(3) DESCRIPTION	MODELS USABLE ON CH-34C	(4) UNIT OF ISSUE	(5) QTY INC IN UNIT PACK	(6) QTY INC IN UNIT	(7) 30-DAY DS GS MAINT ALW (a) 1-20	(b) 21-50	(c) 51-100	(8) 1-YR ALW PER 100 EQUIP CNTGCY	(9) DEPOT MAINT ALW PER 100 EQUIP	(10) ILLUSTRATION (a) FIG NO	(b) ITEM NO
					CONTINUED										49	111
					1560-675-5786											
					ATTACHING PARTS											
P	F		5320-945-8982	201-141131-00-0103 <30323>	...RIVET-PLASTIC.....		EA		AR	*	*	*		REF	49	112
MF	F			S1620-62312 <78286>	...SPACER,SLEEVE.....NOTE1		EA		AR						49	113
					---*---											
			1560-675-5787	S1620-62311-18 <78286>	...PANEL,BOTTOM STRUCTURE....										49	
					SIDE RPL-BY											
					1560-509-0485											
P	F		1560-509-0485	S1620-62311-8 <78286>	...PANEL,BOTTOM STRUCTURE....		EA		1	*	*	*		*	49	114
					SIDE RPLS--											
					1560-675-5787											
					ATTACHING PARTS											
P	F		5320-945-8982	201-141131-00-0103 <30323>	...RIVET-PLASTIC.....		EA		AR	*	*	*		REF	49	115
MF	F			S1620-62312 <78286>	...SPACER,SLEEVE.....NOTE1		EA		AR						49	116
					---*---											
			1560-509-0488	S1620-62311-9 <78286>	...PANEL RPL-BY.....										49	
					1560-675-5788											
P	F		1560-675-5788	S1620-62311-19 <78286>	...PANEL,BOTTOM STRUCTURE....		EA		1	*	*	*		*	49	117
					SIDE RPLS--											
					1560-509-0488											
					ATTACHING PARTS											
P	F		5320-945-8982	201-141131-00-0103 <30323>	...RIVET-PLASTIC.....		EA		AR	*	*	*		REF	49	118
MF	F			S1620-62312 <78286>	...SPACER,SLEEVE.....NOTE1		EA		AR						49	119
					---*---											
			1560-508-9713	S1620-62311-10 <78286>	...PANEL RPL-BY.....										49	
					1560-675-5789											
P	F		1560-675-5789	S1620-62311-20 <78286>	...PANEL,BOTTOM STRUCTURE....		EA		1	*	*	*		*	49	120
					SIDE RPLS--											
					1560-508-9713											
					ATTACHING PARTS											
P	F		5320-945-8982	201-141131-00-0103 <30323>	...RIVET-PLASTIC.....		EA		AR	*	*	*		REF	49	121
MF	F			S1620-62312 <78286>	...SPACER,SLEEVE.....NOTE1		EA		AR						49	122
					---*---											
				S1620-61412-1 <78286>	...BULKHEAD INSTALLATION-LH..				1						49	
				S1620-61412-2 <78286>	...BULKHEAD INSTALLATION-RH..										49	
P	F		1560-757-4830	S1620-61412-7 <78286>	....FRAME,BULKHEAD-LH.....		EA		1	*	*	*		*	49	
P	F		1560-757-4831	S1620-61412-8 <78286>	....FRAME,BULKHEAD-RH.....		EA		1	*	*	*		*	49	
P	F		1560-757-4828	S1620-61412-17 <78286>	....GUSSET,BULKHEAD-LH.....		EA		1	*	*	*		*	49	
P	F		1560-757-4829	S1620-61412-18 <78286>	....GUSSET,BULKHEAD-RH.....		EA		1	*	*	*		*	49	
				S1620-61412-3 <78286>	....BULKHEAD ASSEMBLY-LH.....		EA		1						49	
				S1620-61412-4 <78286>	....BULKHEAD ASSEMBLY-RH.....		EA		1						49	
P	F		1560-336-0683	S1620-61026-1 <78286>	.....FITTING ASSEMBLY,.....		EA		1	*	*	*		*	49	123
					BOTTOM											
P	F		1560-098-8272	S1620-61026-2 <78286>	.....FITTING ASSEMBLY,.....		EA		1	*	*	2		*	49	
					BULKHEAD-RH											
					ATTACHING PARTS											
P	F		5320-680-2598	ALPPHT6-5 <29666>	.....PIN,RIVET.....		EA		6						49	
P	F		5320-489-4823	LCC6 <29666>	.....COLLAR.....		EA		6	*	*	*		REF	49	
P	F		5320-531-0744	ALPPHT6-3 <29666>	.....PIN,RIVET.....		EA		3	*	*	*		REF	49	
			5320-878-7184	LCR6 <29666>	.....COLLAR,RIVET PIN.....		EA		3	*	*	*			49	
				MS20470AD6 <96906>	.....RIVET.....		EA		4						49	

(1) SOURCE, MAINT AND REC CODE (a) SOURCE CODE	(b) MAINT LEVEL	(c) REC CODE	(2) FEDERAL STOCK NUMBER	REFERENCE NUMBER		(3) DESCRIPTION	MODELS USABLE ON CH-34C	(4) UNIT OF ISSUE	(5) QTY INC IN UNIT PACK	(6) QTY INC IN UNIT	(7) 30-DAY DS GS MAINT ALW (a) 1-20	(b) 21-50	(c) 51-100	(8) 1-YR ALW PER 100 EQUIP CNTGCY	(9) DEPOT MAINT ALW PER 100 EQUIP	(10) ILLUSTRATION (a) FIG NO	(b) ITEM NO
			5320-205-7686	NAS529-6-6	<80205>	.....PIN,RIVET.....		EA		1	*	*	*			49	
			5320-579-1215	NAS528A6	<80205>	.....COLLAR.....		EA		1	*	*	*		*	49	
			5320-205-7776	NAS529-6-5	<80205>	.....PIN,RIVET.....		EA		1	*	*	*			49	
			5320-579-1215	NAS528A6	<80205>	.....COLLAR.....		EA		1	*	*	*		*	49	
			5320-531-0792	NAS1466-4	<80205>	.....PIN,RIVET.....		EA		3	*	*	*		*	49	
P	F		5320-489-4823	LCC6	<29666>	.....COLLAR,RIVET PIN.....		EA		3	*	*	*		REF	49	
P	F		5320-531-0744	ALPPHT6-3	<29666>	.....PIN,RIVET.....		EA		3	*	*	*		REF	49	
P	F		5320-878-7184	LCR6	<29666>	.....COLLAR.....		EA		3	*	*	*			49	
			5320-205-7705	NAS529-8-5	<80205>	.....PIN,RIVET.....		EA		3	*	*	*			49	
			5320-579-5076	NAS528A8	<80205>	.....COLLAR.....		EA		3	*	*	*			49	
						---*---											
P	F		1560-516-0357	S14-20-2749	<78286>	.....SPACER,SLEEVE.....		EA		2	*	*	2		*	49	124
P	F		1560-554-1088	S1620-61022	<78286>	.....BUSHING,SLEEVE.....		EA		1	*	2	2		*	49	125
P	H		1560-711-4585	S1620-62323-499	<78286>	..TUBE SECTION.....		EA		1	*	*	*		*	49	
P	H		1560-711-4584	S1620-62323-498	<78286>	..TUBE SECTION.....		EA		1	*	*	*		*	49	
P	H		1560-711-4583	S1620-62323-497	<78286>	..TUBE SECTION.....		EA		1	*	*	*		*	49	
P	H		1560-711-4582	S1620-62323-496	<78286>	..TUBE SECTION.....		EA		1	*	*	*		*	49	
MF	F			S1620-61855-1	<78286>	...PLATE,FUSELAGE.....		EA		1						49	
						MAKEFR											
						AR 9535-554-1415 AL ALLY SH											
MF	F			S1620-61925-13	<78286>	....COVER,FORWARD SECTION....		EA		1						49	
						MAKEFR											
						AR 9535-554-1414 AL ALLY SH											
				S1620-61416	<78286>	.BULKHEAD INSTALLATION,.....				1						49	
						BOTTOM STRUCTURE											
X2	F			S1620-61416-1	<78286>	..BULKHEAD ASSEMBLY,BOTTOM...		EA		1						49	
						STRUCTURE											
X2	F		1560-633-6770	S1620-61416-10	<78286>	...SUPPORT,BOTTOM STRUCTURE..		EA		1	*	*	*		*	49	
P	F		1560-650-1606	S1620-61410-1	<78286>	...SUPPORT,BOTTOM STRUCTURE..		EA		1	*	*	*		*	49	
X2	F		1560-633-6771	S1620-61416-12	<78286>	...SUPPORT,BOTTOM STRUCTURE..		EA		1	*	*	*		*	49	
X2	F		1560-650-1597	S1620-61416-13	<78286>	...CLIP,BOTTOM STRUCTURE.....		EA		1	*	*	*		*	49	
X2	F		1560-650-1598	S1620-61416-14	<78286>	...CLIP,BOTTOM STRUCTURE.....		EA		1	*	*	*		*	49	
X2	F		1560-650-1599	S1620-61416-15	<78286>	...STIFFENER,BOTTOM STRUCTURE		EA		1	*	*	*		*	49	
X2	F		1560-650-1600	S1620-61416-16	<78286>	...ZEE,BOTTOM STRUCTURE.....		EA		1	*	*	*		*	49	
X2	F		1560-650-1601	S1620-61416-17	<78286>	...ZEE,BOTTOM STRUCTURE.....		EA		1	*	*	*		*	49	
X2	F		1560-650-1602	S1620-61416-18	<78286>	...STIFFENER,BOTTOM STRUCTURE		EA		1	*	*	*		*	49	
X2	F		1560-650-1603	S1620-61416-19	<78286>	...STIFFENER,BOTTOM STRUCTURE		EA		1	*	*	*		*	49	
X2	F		1560-672-7375	S1620-61416-2	<78286>	...WEB,BOTTOM STRUCTURE.....		EA		1	*	*	*		*	49	
X2	F			S1620-61416-1	<78286>	...WEB,BOTTOM STRUCTURE.....		EA		1						49	
X2	F			S1620-61416-3	<78286>	...WEB,BOTTOM STRUCTURE.....		EA		1						49	
X2	F		1560-679-2601	S1620-61416-20	<78286>	...STIFFENER,BOTTOM STRUCTURE		EA		1	*	*	*		*	49	
X2	F		1560-650-1604	S1620-61416-21	<78286>	...STIFFENER,BOTTOM STRUCTURE		EA		1	*	*	*		*	49	
P	F		1560-650-1605	S1620-61416-22	<78286>	...STIFFENER,BOTTOM STRUCTURE		EA		1	*	*	*		*	49	
X2	F			S1620-61416-23	<78286>	...STIFFENER,BOTTOM STRUCTURE		EA		1						49	
MF	F			S1620-61416-24	<78286>	...FILLER,BOTTOM STRUCTURE...		EA		1						49	
						MAKEFR											
						AR 9535-554-1412 AL ALLY SH											
X2	F		1560-650-1635	S1620-61416-25	<78286>	...TEE,BOTTOM STRUCTURE.....		EA		1	*	*	*		*	49	
X2	F		1560-654-8858	S1620-61416-26	<78286>	...BRACKET,BOTTOM STRUCTURE..		EA		1	*	*	*		*	49	
X2	F		1560-650-1613	S1620-61416-4	<78286>	...WEB,BOTTOM STRUCTURE.....		EA		1	*	*	*		*	49	
X2	F		1560-650-1612	S1620-61416-5	<78286>	...ANGLE,BOTTOM STRUCTURE....		EA		1	*	*	*		*	49	
X2	F		1560-651-4142	S1620-61416-6	<78286>	...ANGLE,BOTTOM STRUCTURE....		EA		1	*	*	*		*	49	

(1) SOURCE, MAINT AND REC CODE (a) SOURCE CODE	(b) MAINT CODE	(c) REC LEVEL CODE	(2) FEDERAL STOCK NUMBER	REFERENCE NUMBER		(3) DESCRIPTION	MODELS USABLE ON CH-34C	(4) UNIT OF ISSUE	(5) QTY INC IN UNIT PACK	(6) QTY INC IN UNIT	(7) 30-DAY DS/GS MAINT ALW (a) 1-20	(b) 21-50	(c) 51-100	(8) 1-YR ALW PER 100 EQUIP CNTGCY	(9) DEPOT MAINT ALW PER 100 EQUIP	(10) ILLUSTRATION (a) FIG NO	(b) ITEM NO
P	F		1560-650-1611	S1620-61416-9	<78286>	...PLATE,BOTTOM STRUCTURE....		EA		1	*	*	*		*	49	
X2	F			S1620-61444-1	<78286>	...ANGLE,BOTTOM STRUCTURE....		EA		1						49	
X2	F		1560-651-4143	S1620-61444-2	<78286>	...BRACKET,ANGLE.....		EA		1	*	*	*		*	49	
X2	F		1560-651-4144	S1620-61444-3	<78286>	...ANGLE,BOTTOM STRUCTURE....		EA		1	*	*	*		*	49	
X2	F			S1620-61444-4	<78286>	...ANGLE,BOTTOM STRUCTURE....		EA		1						49	
X2	F		1560-650-1610	S1620-61445-1	<78286>	...FILLER,BOTTOM STRUCTURE...		EA		2	*	*	*		*	49	
X2	F		1560-650-1609	S1620-61445-4	<78286>	...FILLER,BOTTOM STRUCTURE...		EA		2	*	*	*		*	49	
X2	F		1560-651-4145	S1620-61446-3	<78286>	...GUSSET,BOTTOM STRUCTURE...		EA		2	*	*	*		*	49	
			5325-513-1726	AN231-4	<88044>	..GROMMET-DRAINAGE,PLASTIC...		EA		6	*	*	*		*	49	
						NOTE 1											
						MAKEFR											
						AR 4720-720-4912 HOSE											
				S1620-61100-7	<78286>	CABIN ASSEMBLY SEE FIG.41...										50	
						FOR NHA											
				S1620-63040-1	<78286>	.DECK INSTALLATION.....				1						50	
				S1620-63040-7	<78286>	.DECK INSTALLATION USBL.....				1						50	
						EFF 57-1742 & SUBSEQUENT											
P	F		1560-653-4375	S1620-63039-27	<78286>	..DECK ASSEMBLY.....		EA		1	*	*	2		*	50	
				S1620-61391-8	<78286>	..SUPPORT INSTALLATION-BRAKE.				1						50	
				S1620-61392-1	<78286>	...BRACE ASSEMBLY.....		EA		1						50	
						ATTACHING PARTS											
P	F		5320-270-2798	NAS1530-10	<80205>	...PIN,RIVET.....		EA		6	2	2	4		*	50	1
			5320-286-4630	NAS1080D6	<80205>	...COLLAR,RIVET PIN.....		EA		6	*	*	*		*	50	
P	F		5320-269-9415	NAS 1526-8	<80205>	...PIN,RIVET.....		EA		12	*	*	*		REF	50	2
			5320-286-4630	NAS1080D6	<80205>	...COLLAR,RIVET PIN.....		EA		12	*	*	*		*	50	
			5305-286-0213	AN525-832R10	<88044>	...SCREW,MACHINE.....		HD		4	*	*	*		*	50	3
			5310-184-8966	AN960PD8	<88044>	...WASHER,FLAT.....		HD		4	*	*	*		*	50	
			5310-811-3494	MS21044N08	<96906>	...NUT,SELF-LOCKING,HEXAGON..		EA		4	*	*	*		*	50	
			5305-281-8527	AN525-832R8	<88044>	...SCREW,MACHINE.....		HD		4	*	*	*		*	50	4
			5310-184-8966	AN960PD8	<88044>	...WASHER,FLAT.....		HD		4	*	*	*		*	50	
			5310-811-3494	MS21044N08	<96906>	...NUT,SELF-LOCKING,HEXAGON..		EA		4	*	*	*		*	50	
						---*---											
X2	F			S1620-61392-3	<78286>	....CLIP.....		EA		1						50	5
X2	F			S1620-61392-4	<78286>	....CLIP.....		EA		1						50	6
				S1620-61391-9	<78286>	...SUPPORT INSTALLATION.....				1						50	
						BRAKE-LH											
				S1620-61391-10	<78286>	...SUPPORT INSTALLATION.....				1						50	
						BRAKE-RH											
P	F		1560-659-9200	S1620-61392-7	<78286>	....SUPPORT ASSEMBLY,BRAKE...		EA		1	*	*	*		*	50	8
P	F		1560-654-1393	S1620-61392-8	<78286>	....SUPPORT ASSEMBLY,FUSELAGE		EA		1	*	*	*		*	50	
						ATTACHING PARTS											
			5306-182-2058	AN3H5A	<88044>	....BOLT,MACHINE.....		EA		8	*	*	*		*	50	9
			5310-183-4406	AN960PD10	<88044>	....WASHER,FLAT.....		HD		16	*	*	*		*	50	
			5310-877-5797	MS21044N3	<96906>	....NUT,SELF-LOCKING,HEXAGON.		EA		8	*	*	*		*	50	
			5305-281-8874	AN525-832R18	<88044>	....SCREW,MACHINE.....		EA		4	*	*	*		*	50	10
			5310-184-8966	AN960PD8	<88044>	....WASHER,FLAT.....		HD		8	*	*	*		*	50	

CODE (a) SOURCE, COUT	(b) MAINT LEVEL	(c) REC CODE	FEDERAL STOCK NUMBER	REFERENCE NUMBER		DESCRIPTION	MODELS USABLE ON CH-34C	UNIT OF ISSUE	QTY INC IN UNIT PACK	QTY INC IN UNIT	MAINT ALW (a) 1-20	(b) 21-50	(c) 51-100	ALW PER 100 EQUIP CONTGCY	MAINT ALW PER 100 EQUIP	FIG NO	ITEM NO
			5310-811-3494	MS21044N08	<96906>	....NUT,SELF-LOCKING,HEXAGON.		EA		4	*	*	*		*	50	
						---*---											
			5310-183-4406	AN960PD10	<88044>	.....WASHER,FLAT.....		HD		4	*	*	*		*	50	
			5310-877-5797	MS21044N3	<96906>	.....NUT,SELF-LOCKING,HEXAGON		EA		4	*	*	*		*	50	
X1				S1620-61392-29	<78286>	.....ANGLE-LH.....		EA		1						50	13
X1				S1620-61392-30	<78286>	.....ANGLE-RH.....		EA		1						50	
X1				S1620-61392-31	<78286>	.....BRAKE SUPPORT-LH.....		EA		1						50	16
X1				S1620-61392-6	<78286>	.....BRAKE SUPPORT-RH.....		EA		1						50	
X2	F			S1620-61392-25	<78286>	....GUSSET-RH.....		EA		1						50	
						ATTACHING PARTS											
P	F		5320-119-5548	P5D	<29666>	....RIVET,BLIND.....		EA		4	*	*	*		REF	50	20
X2	F			S1620-61392-25	<78286>	.....GUSSET.....NOTE 1		EA		1						50	24
X2	F			S1620-65149-3	<78286>	..CLIP.....		EA		1						50	25
X2	F			S1620-65149-4	<78286>	..CLIP.....		EA		1						50	
						ATTACHING PARTS											
			5320-286-4630	NAS1080D6	<80205>	..COLLAR,RIVET PIN.....		EA		4	*	*	*		*	50	
						---*---											
X2	F		1560-070-2693	S1620-63038-37	<78286>	..DECK ASSEMBLY.....		EA		1	*	*	*		*	50	
MF	F			S1620-63038-13	<78286>	...COVER,FORWARD SECTION.....		EA		1						50	
						MAKEFR											
						AR 9535-554-1414 AL ALLY SH											
P	F		1560-653-4375	S1620-63039-27	<78286>	..DECK ASSEMBLY.....		EA		1	*	*	REF		*	50	27
						ATTACHING PARTS											
P	F		5310-477-8775	140-58228	<43999>	..WASHER,FLAT.....		EA		23	*	*	*		REF	50	29
			5320-286-4630	NAS1080D6	<80205>	..COLLAR.....		EA		23	*	*	*		*	50	30
			5306-182-2063	AN3H12A	<88044>	..BOLT,MACHINE.....		HD		1	*	*	*		*	50	31
			5310-183-4406	AN960PD10	<88044>	..WASHER,FLAT.....		HD		1	*	*	*		*	50	32
P	F		5310-477-8775	140-58228	<43999>	..WASHER,FLAT.....		EA		1	*	*	*		REF	50	33
			5310-877-5797	MS21044N3	<96906>	..NUT,SELF-LOCKING,HEXAGON...		EA		1	*	*	*		*	50	34
				ALPPH-E6-12	<29666>	..LOCK BOLT.....		EA		8						50	35
P	F		5310-477-8775	140-58228	<43999>	..WASHER,FLAT.....		EA		8	*	*	*		REF	50	36
			5320-286-4630	NAS1080D6	<80205>	..COLLAR,RIVET PIN.....		EA		8	*	*	*		*	50	37
P	F		5310-477-8775	140-58228	<43999>	..WASHER,FLAT.....		EA		19	*	*	*		REF	50	39
			5320-286-4630	NAS1080D6	<80205>	..COLLAR,RIVET PIN.....		EA		19	*	*	*		*	50	40
						---*---											
			1560-779-2463	S1620-63014-3	<78286>	...COVER ASSEMBLY,FORWARD....										50	
						SECTION RPL-BY											
						1560-757-4832											
P	F		1560-757-4832	S1620-63014-5	<78286>	...COVER ASSEMBLY,FORWARD....		EA		1	*	*	*		*	50	
						FUSELAGE SECTION RPLS--											
						1560-779-2463											
P	O		1560-659-9192	S1620-61845-2	<78286>	...SPACER,SLEEVE.....		EA		4	*	*	*		*	50	41
				S1620-61871-42	<78286>	.SKIN INSTALLATION-LH.....				1						50	
X2	F			S1620-61871-25	<78286>	..GUSSET.....		EA		1						50	50
				S1620-61872-38	<78286>	.SKIN INSTALLATION-RH.....				1						50	
			5305-286-0213	AN525-832R10	<88044>	..SCREW,MACHINE.....		HD		28	*	*	*		*	50	42
P	F		5325-285-3373	S3-150	<72794>	..LOCKSPRING,TURNLOCK.....		EA		28	*	*	*		*	50	43
						FASTENER CODE J											
P	F		1560-629-4603	SS4050-2	<78286>	..SPACER.....CODE J		EA		56	*	2	2		*	50	45
P	F		1560-566-8107	S1620-61500-13	<78286>	..RETAINER,SCREEN FUSELAGE...		EA		1	*	*	*		*	50	
P	F		1560-563-9853	S1620-61501-13	<78286>	..RETAINER,SCREEN.....CODE D		EA		1	*	2	2		*	50	46
P	F		1560-613-3029	S1620-61871-35	<78286>	..RETAINER ASSEMBLY....CODE J		EA		1	*	*	*		*	50	

(1) SOURCE, MAINT AND REC CODE (a) SOURCE CODE	(b) MAINT LEVEL	(c) REC CODE	(2) FEDERAL STOCK NUMBER	REFERENCE NUMBER		(3) DESCRIPTION	MODELS USABLE ON CH-34C	(4) UNIT OF ISSUE	(5) QTY INC IN UNIT PACK	(6) QTY INC IN UNIT	(7) 30-DAY DS GS MAINT ALW (a) 1-20	(b) 21-50	(c) 51-100	(8) 1-YR ALW PER 100 EQUIP CNTGCY	(9) DEPOT MAINT ALW PER 100 EQUIP	(10) ILLUSTRATION (a) FIG NO	(b) ITEM NO
			1560-524-2644	S1620-61500-14	<78286>	..SCREEN,FUSELAGE RPL-BY.... 1560-987-3327										50	
P	O		1560-987-3327	S1620-64202-1	<78286>	..SCREEN ASSEMBLY RPLS--.... 1560-524-2644		EA		1	2	3	5		*	50	47
P	O		1560-980-9424	S1620-64202-2	<78286>	..SCREEN ASSEMBLY,FUSELAGE... RPLS-- 1560-445-3401, 1560-524-2645		EA		1	2	2	3		*	50	
				S1620-61550	<78286>	..SCUPPER INSTALLATION-OIL...				1						50	
P	F		5325-505-4798	212-12	<71286>	...RECEPTACLE,TURNLOCK..... FASTENER		EA		1	*	*	*		*	50	48
X2	F			S1620-61550-2	<78286>	...ANGLE.....		EA		1						50	50
X2	F			S1620-61550-5	<78286>	...CLIP.....		EA		2						50	53
X2	F			S1620-61550-3	<78286>	...ANGLE.....		EA		1						50	55
X2	F			S1620-61550-4	<78286>	...ANGLE.....		EA		1						50	
X2	F			S1620-61550-1	<78286>	...SCUPPER.....		EA		1						50	59
				S1620-61566-1	<78286>	..LOCK ROD AND PAN..... INSTALLATION-LH				1						50	
				S1620-61566-2	<78286>	..LOCK ROD AND PAN..... INSTALLATION-RH				1						50	
X2	F			S1620-61566-3	<78286>	...CHANNEL ASSEMBLY..... ATTACHING PARTS		EA		1						50	
			5310-167-0753	AN960PD10L	<88044>	...WASHER,FLAT.....		HD		2	*	*	*		*	50	61
			5310-877-5797	MS21044N3	<96906>	...NUT,SELF-LOCKING,HEXAGON..		EA		1	*	*	*		*	50	
				MS20470AD4	<96906>	...RIVET.....		EA		8						50	62
						---*---											
X2	F			S1620-61563	<78286>	...PAN.....		EA		1						50	
X2	F			S1620-61566-7	<78286>	...SUPPORT.....		EA		1						50	
				S1620-61123-1	<78286>	..ANGLE INSTALLATION..... SERVICE STEPS-LH				1						50	
				S1620-61123-2	<78286>	..ANGLE INSTALLATION..... SERVICE STEPS-RH				1						50	
				S1620-61123-5	<78286>	..ANGLE INSTALLATION..... SERVICE STEPS-LH				1						50	
				S1620-61123-6	<78286>	..ANGLE INSTALLATION..... SERVICE STEPS-RH				1						50	
				S1620-61123-7	<78286>	..ANGLE INSTALLATION..... SERVICE STEPS-LH				1						50	
				S1620-61123-8	<78286>	..ANGLE INSTALLATION..... SERVICE STEPS-RH				1						50	
				S1620-66370	<78286>	..SUPPORT INSTALLATION.....				1						50	
X2	F		1560-879-6675	S1620-66370-5	<78286>	...DOOR ASSEMBLY-RH ONLY.....		EA		1	*	*	*			50	89
X2	F		5340-929-1041	S1620-61852-2	<78286>	....HINGE ASSEMBLY-RH ONLY... ATTACHING PARTS		EA		1	*	*	*		*	50	91
			5310-550-5009	MS 15795-704	<96906>	...WASHER,FLAT.....		HD		1	*	*	*		*	50	93
X2	F			S1620-61852-11	<78286>	...COVER-RH ONLY.....CODE D		EA		1						50	94
X2	F			S1620-66870-4	<78286>	...COVER-RH ONLY.....CODE J		EA		1						50	
X2	F			S1620-61852-10	<78286>	...DOUBLER-RH ONLY.....CODE D		EA		1						50	96
X2	F			S1620-66870-3	<78286>	...DOUBLER-RH.....CODE J		EA		1						50	
X2	F			S1620-61160-10	<78286>	...INTERCOSTAL-RH ONLY.....		EA		1						50	98
P	O		1560-446-1443	S1620-66370-7	<78286>	...SUPPORT ASSEMBLY.....		EA		1	*	*	*		*	50	
				S1620-61869-1	<78286>	..SERVICE STEP INSTALLATION.. UPPER LH ONLY				1						50	

(1) SOURCE, MAINT AND REC CODE (a) SOURCE CODE	(b) MAINT LEVEL	(c) REC CODE	(2) FEDERAL STOCK NUMBER	REFERENCE NUMBER		(3) DESCRIPTION	MODELS USABLE ON CH-34C	(4) UNIT OF ISSUE	(5) QTY INC IN UNIT PACK	(6) QTY INC IN UNIT	(7) 30-DAY DS GS MAINT ALW (a) 1-20	(b) 21-50	(c) 51-100	(8) TYP ALWPER 100 EQUIP CNTGCY	(9) DEPOT MAINT ALWPER 100 EQUIP	(10) ILLUSTRATION (a) FIG NO	(b) ITEM NO
				S1620-61869-48	<78286>	..SERVICE STEP INSTALLATION.. LOWER LH ONLY				1						50	
P	F		1560-711-4571	S14-20-2529-26	<78286>	...DOOR ASSEMBLY.....		EA		1	*	*	*		*	50	100
AF	F			S12-20-2611-4	<78286>	....HINGE ASSEMBLY..... ATTACHING PARTS		EA		1						50	102
			5320-117-6815	MS20470AD3-4	<96906>	....RIVET,SOLID..... ---*---		LB		6	*	*	*		*	50	103
P	F		1560-663-1579	S12-20-2325-1	<78286>	.....SPRING,HELICAL TORSION..		EA		1	2	3	6		*	50	104
X2	F			S1620-61869-33	<78286>	...COVER ASSEMBLY-LOWER.....		EA		1						50	106
X2	F			S1620-61869-35	<78286>	...COVER ASSEMBLY,LOWER.....		EA		1						50	
			5310-187-2400	AN960PD616	<88044>	....WASHER,FLAT.....		HD		1	*	*	*		*	50	113
				A31-200	<03481>	....RIVNUT.....		EA		1						50	
X2	F			S1620-61869-44	<78286>	....COVER.....		EA		1						50	114
X2	F			S1620-61869-26	<78286>	...SPACER-LOWER.....		EA		1						50	115
X2	F			S1620-61869-16	<78286>	...CLIP-LOWER.....		EA		1						50	117
X2	F			S1620-61869-15	<78286>	...CLIP-LOWER.....		EA		1						50	121
X2	F			S1620-61869-9	<78286>	...SPACER-LOWER.....		EA		1						50	124
X2	F			S1620-61869-11	<78286>	...CLIP-LOWER.....		EA		1						50	125
X2	F			S1620-61300-12	<78286>	...CLIP-LOWER.....		EA		1						50	128
X2	F			S1620-61300-10	<78286>	...SPACER-LOWER.....		EA		1						50	130
X2	F			S1620-61300-4	<78286>	...SUPPORT-UPPER.....		EA		1						50	132
X2	F			S1620-61869-17	<78286>	...CLIP-UPPER LH.....		EA		1						50	134
X2	F			S1620-61869-23	<78286>	...CLIP-UPPER RH..... ATTACHING PARTS		EA		1						50	
				S1620-61870	<78286>	..SERVICE STEP INSTALLATION.. LOWER RH ONLY				1						50	
P	F		1560-711-4571	S14-20-2529-26	<78286>	...DOOR ASSEMBLY.....		EA		1	*	*	*		REF	50	137
AF	F			S12-20-2611-4	<78286>	....HINGE ASSEMBLY..... ATTACHING PARTS		EA		1						50	139
			5320-117-6815	MS20470AD3-4	<96906>	....RIVET,SOLID..... ---*---		LB		6	*	*	*		*	50	140
P	F		1560-663-1579	S12-20-2325-1	<78286>	.....SPRING,HELICAL TORSION..		EA		1	REF	REF	REF		REF	50	141
				S1620-61942-16	<78286>	..FUEL VENT INSTALLATION-RH.. ONLY				1						50	
			5310-857-5547	MS21044D06	<96906>	...NUT,SELF-LOCKING,HEXAGON..		EA		2	*	*	*		*	50	
X2	F			S1620-61942-5	<78286>	...GUARD.....		EA		1						50	144
X2	F			S1620-61942-6	<78286>	...GUARD.....		EA		1						50	145
			4730-287-0290	AN818-10D	<88044>	....NUT,TUBE COUPLING.....		EA		2	*	*	*		*	50	147
			4730-277-5358	MS20819-10D	<96906>	....SLEEVE,FLARED,TUBE..... FITTING		EA		2	*	*	*		*	50	148
			4730-287-0290	AN818-10D	<88044>	....NUT,TUBE COUPLING.....		EA		2	*	*	*		*	50	151
			4730-277-5358	MS20819-10D	<96906>	....SLEEVE,FLARED,TUBE..... FITTING		EA		2	*	*	*		*	50	152
P	F		1560-626-8413	S1620-62585-1	<78286>	...GUARD.....		EA		1	*	*	*		*	50	154
P	F		1560-633-6132	S1620-62585-2	<78286>	...ANGLE.....		EA		1	*	*	*		*	50	156
				S1620-61781	<78286>	..FLANGE INSTALLATION-RH ONLY				1						50	
P	F		1560-509-4548	S14-45-2307	<78286>	...FLANGE,STATIC PRESSURE.... INSTRUMENT		EA		1	*	*	*		*	50	158
				S1620-61867-12	<78286>	..GUSSET INSTALLATION-RH ONLY				1						50	
X2	F			S1620-61231-4	<78286>	...GUSSET.....		EA		1						50	161
				S1620-61867-10	<78286>	..GUSSET INSTALLATION-RH ONLY				1						50	
X2	F			S1620-61231-5	<78286>	...GUSSET.....		EA		1						50	163

(1) SOURCE, MAINT AND REC CODE (a) SOURCE	(b) MAINT LEVEL	(c) REC LEVEL	(2) FEDERAL STOCK NUMBER	REFERENCE NUMBER	(3) DESCRIPTION	MODELS USABLE ON CH-34C	(4) UNIT OF ISSUE	(5) QTY INC IN UNIT PACK	(6) QTY INC IN UNIT	(7) 30 DAY DS GS MAINT ALW (a) 1-20	(b) 21-50	(c) 51-100	(8) 1-YR ALW PER 100 EQUIP CNTGCY	(9) DEPOT MAINT ALW PER 100 EQUIP	(10) ILLUSTRATION (a) FIG NO	(b) ITEM NO
					CONTINUED										50	163
					ATTACHING PARTS											
X2	F			S1620-61500-1 <78286>	..SKIN-LH ONLY.....		EA		1						50	165
X2	F			S1620-61501-15 <78286>	..STRIP-TAPERED.....		EA		2						50	167
					ATTACHING PARTS											
			5306-151-1961	AN23-9 <88044>	..BOLT,CLEVIS.....		EA		2	*	*	*		*	50	168
			5310-167-0753	AN960PD10L <88044>	..WASHER,FLAT.....		HD		2	*	*	*		*	50	
			5310-807-1467	MS21042-3 <96906>	..NUT,EXTENDED WASHER.....				2	*	*	*		*	50	
					---*---											
X2	F			S1620-61500-3 <78286>	..SKIN-LH ONLY.....		EA		1						50	169
X2	F			S1620-61500-4 <78286>	..SKIN-LH ONLY.....		EA		1						50	170
X2	F			S1620-61500-5 <78286>	..SKIN-LH ONLY.....		EA		1						50	171
X2	F			S1620-61501-16 <78286>	..STRIP-TAPERED.....		EA		2						50	172
					ATTACHING PARTS											
			5306-150-9906	AN23-10A <88044>	..BOLT,CLEVIS.....		EA		2	*	*	*		*	50	173
			5310-167-0753	AN960PD10L <88044>	..WASHER,FLAT.....		HD		2	*	*	*		*	50	
			5310-807-1467	MS21042-3 <96906>	..NUT,EXTENDED WASHER.....				2	*	*	*		*	50	
					---*---											
X2	F			S1620-61500-15 <78286>	..GUSSET-LH ONLY.....		EA		1						50	174
					ATTACHING PARTS											
			5306-150-9906	AN23-10A <88044>	..BOLT,CLEVIS-LH ONLY.....		EA		2	*	*	*		*	50	178
			5310-167-0753	AN960PD10L <88044>	..WASHER,FLAT-LH ONLY.....		HD		2	*	*	*		*	50	
			5310-807-1467	MS21042-3 <96906>	..NUT,EXTENDED WASHER.....				2	*	*	*		*	50	
P	F		5320-558-3085	SALP-T6-7 <29666>	..PIN-LH ONLY.....		EA		1	*	*	*		*	50	181
X2	F			S1620-61501-6 <78286>	..SKIN-LH ONLY.....		EA		1						50	183
X2	F			S1620-61500-8 <78286>	..SKIN-LH ONLY.....		EA		1						50	184
X2	F			S1620-61500-9 <78286>	..SKIN-LH ONLY.....		EA		1						50	185
X2	F		1560-672-0060	S1620-61500-10 <78286>	..SKIN-LH ONLY.....		EA		1	*	*	*		*	50	186
X2	F			S1620-61500-7 <78286>	..SKIN.....		EA		1						50	187
X2	F			S1620-61500-11 <78286>	..SKIN-LH ONLY.....		EA		1						50	188
X2	F		1560-347-3441	S10-20-5006-2 <78286>	...LOUVER.....		EA		4	*	*	*		*	50	
X2	F		1560-672-0062	S1620-61501-9 <78286>	SKIN,FORWARD SECTION.....		EA		1	*	*	*		*	50	
X2	F			S1620-61502-5 <78286>	..SKIN,FORWARD SECTION.....		EA		1						50	
X2	F		1560-766-2016	S1620-61502-3 <78286>	..SKIN ASSEMBLY.....		EA		1	*	*	*		*	50	
X2	F		1560-672-0061	S1620-61502-1 <78286>	..SKIN,FORWARD SECTION.....		EA		1	*	*	*		*	50	
X2	F			S1620-61230-2 <78286>	...ANGLE.....		EA		1						50	
					ATTACHING PARTS											
			5305-958-1009	MS35219-55 <96906>	...SCREW,MACHINE.....		EA		1	*	*	*		*	50	
					---*---											
P	F		5340-584-6176	SS1050-3 <78286>	...CLIP.....		EA		2	*	*	*		*	50	
P	F		1560-633-6950	S1620-61189-8 <78286>	..BEARING SUPPORT,FUSELAGE...		EA		1	*	*	2		*	50	191
					ATTACHING PARTS											
			5310-167-0753	AN960PD10L <88044>	..WASHER,FLAT.....		HD		4	*	*	*		*	50	
			5310-877-5798	MS21044D3 <96906>	..NUT,SELF-LOCKING,HEXAGON...		EA		2	*	*	*		*	50	
					---*---											
X2	F		1560-986-0385	S1620-61196 <78286>	.ANGLE,FUSELAGE,FORWARD.....		EA		1	*	*	*		*	50	
P	F		1560-654-8901	S1620-61176 <78286>	..SUPPORT,FUSELAGE,BEARING...		EA		1	*	*	2		*	50	197
X2	F			S1620-61172 <78286>	..SPACER.....		EA		1						50	199
				S1620-61323-8 <78286>	.SPLICE INSTALLATION.....				1						50	
X2	F			S1620-61187-11 <78286>	..CLIP.....		EA		1						50	200
X2	F			S1620-61188 <78286>	..SPLICE-ZEE.....		EA		1						50	202
X2	F			S1620-61337-7 <78286>	..CLIP.....		EA		1						50	

(1) SOURCE, MAINT AND REC CODE (a) SOURCE CODE	(b) MAINT LEVEL	(c) REC CODE	(2) FEDERAL STOCK NUMBER	REFERENCE NUMBER		(3) DESCRIPTION	MODELS USABLE ON CH-34C	(4) UNIT OF ISSUE	(5) QTY INC IN UNIT PACK	(6) QTY INC IN UNIT	(7) 30-DAY DS GS MAINT ALW (a) 1-20	(b) 21-50	(c) 51-100	(8) 1-YR ALW PER 100 EQUIP CNTGCY	(9) DEPOT MAINT ALW PER 100 EQUIP	(10) ILLUSTRATION (a) FIG NO	(b) ITEM NO
X2	F			S1620-61230-1	<78286>	..PLATE-TIE.....		EA		1						50	204
X2	F			S1620-61338-1	<78286>	..CLIP.....		EA		1						50	206
P	F		1560-765-7787	S1620-63161	<78286>	..BEARING SUPPORT.....		EA		1	*	*	*		*	50	208
			1560-765-7787	L1560-765-7787	<13805>	ADDED PART NO.FOR ABOVE ITEM.		EA			*	*	*			50	208
X2	F			S1620-61339	<78286>	..CHANNEL-SPLICE.....		EA		1						50	210
				S1620-61139-9	<78286>	..LEFT HAND BULKHEAD.....				1						50	212
						INSTALLATION SEE FIG.51											
						FOR BREAKDOWN CODE D											
				S1620-61137-7	<78286>	..FRAME ASSEMBLY-LH.....		EA		1						50	
P	F		1560-340-0173	S1620-61875	<78286>	...FITTING ASSEMBLY RPLS--..		EA		1	*	*	*		*	50	213
						1560-575-2016											
						ATTACHING PARTS											
P	H		5320-630-5713	ALPPHT8-6	<29666>	...PIN,RIVET.....		EA		6	*	*	*		REF	50	214
P	H		5320-489-4824	LCC8	<29666>	...COLLAR,RIVET PIN.....		EA		6	*	*	*		REF	50	
						---*---											
X2	F		1560-591-6808	S1620-61076-3	<78286>	...FITTING.....		EA		1	*	*	*		*	50	
			5310-728-5510	MS21078-3	<96906>	...NUT,SELF-LOCKING,PLATE....		EA		4	*	*	*		*	50	215
						ATTACHING PARTS											
MF	F			S1620-61960	<78286>	...SPACER.....		EA		4						50	218
						MAKEFR											
						AR 9535-555-1416 AL ALLY SH											
MF	F			S1620-61958	<78286>	...ANGLE.....		EA		4						50	220
						MAKEFR											
						AR 9535-554-1416 AL ALLY SH											
P	D		1560-693-8815	S1620-61874	<78286>	..FITTING ASSEMBLY,FUSELAGE..		EA		1					*	50	
				S1620-63004-67	<78286>	..BULKHEAD ASSEMBLY.....		EA		1						50	
X2	F			S1620-66115-3	<78286>	...SPLICE TEE.....		EA		1						50	
X2	F			S1620-66120-73	<78286>	...ANGLE.....		EA		1						50	
				S1620-63004-58	<78286>	...COVER INSTALLATION.....				1						50	
X2	F			S1620-66120-75	<78286>	...ANGLE.....		EA		1						50	
X2	F			S1620-66120-22	<78286>	...ANGLE,FORWARD SECTION.....		EA		1						50	
X2	F			S1620-66120-25	<78286>	...GUSSET,FORWARD SECTION....		EA		1						50	
P	O		1560-780-1117	S1620-63256-1	<78286>	...COVER ASSEMBLY.....		EA		1	*	2	2		*	50	224
			5325-449-3229	AW4-30	<72794>	.....STUD RPL-BY.....										50	
						5325-291-0315											
			5325-231-0315	AW4-45	<72794>	.....STUD,TURNLOCK FASTENER..		EA		1					*	50	
						RPL-BY 5325-290-2906											
P	F		5325-290-2906	AJ4-45	<72794>	.....STUD,TURNLOCK FASTENER.		EA		1	*	*	*			50	225
						RPLS--5325-291-0315											
P	F		5325-281-4965	GA4-250	<72794>	.....EYELET,TURNLOCK FASTENER		HD		10	*	*	*		*	50	226
P	O		1560-633-6961	S1620-63256-2	<78286>	.....COVER.....		EA		1	*	*	*		*	50	227
MF	F			S1620-63004-31	<78286>	....HINGE ASSEMBLY.....		EA		10						50	228
						MAKEFR											
						AR 5340-550-5035 AL ALLY SH											
			5340-664-8140	MS20001P3-7200	<96906>	....HINGE,BUTT.....		EA		1	*	*	*		*	50	
AF	F			S1620-63004-9	<78286>	....COVER ASSEMBLY.....CODE I		EA		1						50	230
MF	F			S1620-63004-33	<78286>	.....HINGE,CONTINUOUS.....		EA		1						50	231
						MAKEFR											
						AR 5340-057-2625 HINGE											
MF	O			AN253-2-3600	<88044>	.....PIN,HINGE.....		EA		1						50	
						MAKEFR											
						AR 9505-186-9155 AL ALLY SH											

(1) SOURCE, MAINT AND REC CODE (a) SOURCE CODE	(b) MAINT LEVEL	(c) REC CODE	(2) FEDERAL STOCK NUMBER	REFERENCE NUMBER	(3) DESCRIPTION	MODELS USABLE ON CH-34C	(4) UNIT OF ISSUE	(5) QTY INC IN UNIT PACK	(6) QTY INC IN UNIT	(7) 30-DAY DS GS MAINT ALW (a) 1-20	(b) 21-50	(c) 51-100	(8) 1-YR ALW PER 100 EQUIP CNTGCY	(9) DEPOT MAINT ALW PER 100 EQUIP	(10) ILLUSTRATION (a) FIG NO	(b) ITEM NO
P	F		5325-700-6014	AW4-25	<72794> .....FASTENER..... U/O PN S1620-63004-9		EA		3	*	*	*		*	50	233
P	F		5325-449-3156	A4-25	<72794> .....STUD,TURNLOCK FASTENER.. U/O PN S1620-63004-56		HD		3	*	*	*		*	50	
P	F		5325-281-4965	GA4-250	<72794> .....EYELET,TURNLOCK FASTENER RPLS-- 5325-449-3229		HD		3	*	*	*		REF	50	234
			1560-830-5705	S1620-63004-10	<78286> .....COVER RPL-BY..... 1560-830-5706										50	235
P	F		1560-830-5706	S1620-63004-11	<78286> .....COVER,FORWARD SECTION... RPLS-- 1560-830-5705 U/O PN S1620-63004-9		EA		1	*	*	2		*	50	236
P	F		1560-633-6959	S1620-63004-57	<78286> .....COVER U/O..... PN S1620-63004-56		EA		1	*	*	*		*	50	237
X2	F		1560-986-0389	S1620-66120-24	<78286> ....ANGLE.....		EA		1	*	*	*		*	50	
P	F		5325-355-8963	S4-200	<72794> ....LOCKSPRING,TURN LOCK.....		EA		3	*	*	*		*	50	238
P	F		1560-629-4603	SS4050-2	<78286> ....SPACER.....		EA		6	*	REF	REF		REF	50	239
X2	F			S1620-66120-14	<78286> ....ANGLE.....		EA		1						50	
P	F		5325-355-8963	S4-200	<72794> ....LOCKSPRING.....		EA		3	*	*	*		REF	50	241
P	F		1560-629-4603	SS4050-2	<78286> ....SPACER.....		EA		6	*	REF	REF		REF	50	242
X2	D			S1620-66120-27	<78286> ....CLIP.....		EA		1						50	
X2	F			S1620-63004-25	<78286> ...CHANNEL ASSEMBLY.....		EA		1						50	
X1				S1620-63004-21	<78286> ....CHANNEL.....		EA		1						50	
P	F		5325-355-8963	S4-200	<72794> ....LOCKSPRING.....		EA		2	*	*	*		REF	50	244
P	F		1560-629-4603	SS4050-2	<78286> ....SPACER.....		EA		4	*	REF	REF		REF	50	245
				S1620-61780	<76286> ...SCREEN INSTALLATION.CODE D				1						50	
P	F		5340-994-3256	S1620-63004-50	<78286> ....CLIP.....		EA		1	*	*	*		*	50	
P	F		1560-575-2026	S1620-61780-1	<78286> ....SCREEN ASSEMBLY,FORWARD.. SECTION		EA		1	*	*	*		*	50	247
					ATTACHING PARTS											
			5305-958-1011	MS35219-56	<96906> ....SCREW,MACHINE.....		HD		6	*	*	*		*	50	248
			5310-167-0753	AN960PD10L	<88044> ....WASHER,FLAT.....		HD		12	*	*	*		*	50	
			5310-877-5798	MS21044D3	<96906> ....NUT,SELF-LOCKING,HEXAGON.		EA		6	*	*	*		*	50	
					---*---											
X2	F		1560-979-7500	S1620-66120-21	<78286> ...ANGLE-FORWARD SECTION.....		EA		1	*	*	*		*	50	
P	F		1560-591-0560	S1650-61873-2	<78286> ...DOOR ASSEMBLY-CARBURETOR.. INDUCTION HEAT		EA		1	*	*	*		*	50	248B
P	F		5325-141-3291	244-16S	<71286> ...RECEPTACLE,TURNLOCK..... FASTENER		EA		7	*	*	*		*	50	249
P	F		5325-505-4798	212-12	<71286> ...RECEPTACLE,TURNLOCK..... FASTENER		EA		2	*	*	*		REF	50	250
X2	F			S1620-63004-45	<78286> ...PANEL ASSEMBLY..... ATTACHING PARTS		EA		1						50	251
			5306-182-2057	AN3H4A	<88044> ...BOLT,MACHINE.....		HD		20	*	*	*		*	50	252
			5310-167-0818	AN960-10	<88044> ...WASHER,FLAT.....		HD		20	*	*	*		*	50	
					---*---											
X2	F		1560-805-4884	S1620-61141-4	<78286> ...CLIP.....		EA		2	*	*	*		*	50	
					...HINGE INSTALLATION.....				1						50	
P	F		5340-326-3435	S1620-61704-1	<78286> ....LEAF,BUTT HINGE..... ATTACHING PARTS		EA		1	*	*	*		*	50	257
			5305-824-2021	MS24694C54	<96906> ....SCREW,MACHINE.....		EA		4	*	*	*		*	50	258
			5310-167-0753	AN960PD10L	<88044> ....WASHER,FLAT.....		HD		4	*	*	*		*	50	
			5310-877-5797	MS21044N3	<96906> ....NUT,SELF-LOCKING,HEXAGON.		EA		4	*	*	*		*	50	

(1) SOURCE, MAINT AND REC CODE (a) SOURCE CODE	(b) MAINT LEVEL	(c) REC CODE	(2) FEDERAL STOCK NUMBER	REFERENCE NUMBER		(3) DESCRIPTION	MODELS USABLE ON CH-34C	(4) UNIT OF ISSUE	(5) QTY INC IN UNIT PACK	(6) QTY INC IN UNIT	(7) 30-DAY DS GS MAINT ALW (a) 1-20	(b) 21-50	(c) 51-100	(8) 1-YR ALW PER 100 EQUIP CNTGCY	(9) DEPOT MAINT ALW PER 100 EQUIP	(10) ILLUSTRATION (a) FIG NO	(b) ITEM NO
				S1620-61721-3	<78286>	....TEE CLIP.....		EA		1						50	260
				S1620-61703-3	<78286>	....HINGE INSTALLATION.....				1						50	
P	F		5340-984-8814	S1620-61705-1	<78286>	.....LEAF,BUTT HINGE.....		EA		1	*	*	2		*	50	262
						ATTACHING PARTS											
			5305-824-2021	MS24694C54	<96906>	.....SCREW,MACHINE.....		EA		4	*	*	*		*	50	263
			5310-167-0753	AN960PD10L	<88044>	.....WASHER,FLAT.....		HD		4	*	*	*		*	50	
			5310-877-5797	MS21044N3	<96906>	.....NUT,SELF-LOCKING,HEXAGON		EA		4	*	*	*		*	50	
X2	F			S1620-61133-9	<78286>	....PLATE-SPLICE.....		EA		1						50	267
						ATTACHING PARTS											
MF	F			S1620-61944	<78286>	...GUSSET.....		EA		2						50	269
						MAKEFR											
						AR 9535-554-1416 AL ALLY SH											
MF	F			S1620-61944	<78286>	...GUSSET.....		EA		2						50	272
						MAKEFR											
						AR 9535-554-1416 AL ALLY SH											
				S1620-61128-5	<78286>	..FRAME INSTALLATION.....				1						50	
				S1620-61128-6	<78286>	...FRAME ASSEMBLY.....		EA		1						50	
MF	F			S1620-61698	<78286>	....GUARD.....		EA		1						50	275
						MAKEFR											
						AR 9330-290-3461 PLASTIC SH											
						ATTACHING PARTS											
				S1620-61132-13	<78286>	..FRAME INSTALLATION-LH.....				1						50	
			5310-728-5510	MS21078-3	<96906>	...NUT,SELF-LOCKING,PLATE....		EA		1	*	*	*		*	50	277
			5310-728-5510	MS21078-3	<96906>	....NUT,SELF-LOCKING,PLATE...		EA		8	*	*	*		*	50	280
X2	F			S1620-61132-5	<78286>	....ANGLE.....		EA		1						50	285
						ATTACHING PARTS											
X2	F			S1620-61132-7	<78286>	....ANGLE.....		EA		1						50	287
						ATTACHING PARTS											
				S1620-61928-1	<78286>	..BULKHEAD INSTALLATION.....				1						50	
X2	F			S1620-61928-23	<78286>	...BULKHEAD ASSEMBLY.....		EA		1						50	
P	F		1560-633-0883	S1620-61891-3	<78286>	....CHANNEL,BULKHEAD.....		EA		1	*	*	2		*	50	292
MF	F			S1620-61891-4	<78286>	....SPACER.....		EA		11						50	294
						MAKEFR											
						AR 9330-576-3984 PLASTIC SH											
				S1620-63260	<78286>	...PANEL INSTALLATION.....				1						50	
X2	F			S1620-61352-10	<78286>	...CLIP,FUSELAGE FORWARD.....		EA		1						50	
						SECTION											
X2	F			S1620-61353-11	<78286>	...CLIP.....		EA		1						50	
P	F		5325-505-4798	212-12	<71286>	.....RECEPTACLE,TURNLOCK.....		EA		3	*	*	*		*	50	296
						FASTENER											
P	F		5325-505-4798	212-12	<71286>	.....RECEPTACLE,TURNLOCK.....		EA		2	*	*	*		REF	50	299
						FASTENER											
				S1620-61049-1	<78286>	...FRAME INSTALLATION.....				1						50	
				S1620-61696-2	<78286>	.....GUARD.....		EA		1						50	301
						ATTACHING PARTS											
				MS20470AD4	<96906>	.....RIVET.....		EA		4						50	302
						---*---											
				S1620-61117-1	<78286>	...FRAME INSTALLATION.....				1						50	
				S1620-61117-5	<78286>	....FRAME.....		EA		1						50	
MF	F			S1620-61695	<78286>	.....GUARD.....		EA		1						50	303
						MAKEFR											

(1) SOURCE, MAINT AND REC CODE (a) SOURCE CODE	(b) MAINT CATEGORY	(c) REC CODE	(2) FEDERAL STOCK NUMBER	REFERENCE NUMBER		(3) DESCRIPTION	MODELS USABLE ON CH-34C	(4) UNIT OF ISSUE	(5) QTY INC IN UNIT PACK	(6) QTY INC IN UNIT	(7) 30-DAY DS/GS MAINT ALW (a) 1-20	(b) 21-50	(c) 51-100	(8) 1-YR ALW PER 100 EQUIP CNTGCY	(9) DEPOT MAINT ALW PER 100 EQUIP	(10) ILLUSTRATION (a) FIG NO	(b) ITEM NO
						CONTINUED										50	303
						AR 9330-290-3461 PLASTIC SH											
X2	F		1560-766-2018	S1620-61106-23	<78286>	..BRACKET,FUSELAGE.....		EA		1	*	*	*		*	50	
				S1620-61139-10	<78286>	..RIGHT HAND BULKHEAD.....				1						50	305
						INSTALLATION SEE FIG.52											
						FOR BREAKDOWN CODE D											
				S1620-61990-22	<78286>	..BULKHEAD INSTALLATION.....				1						50	
						SEE FIG.53 FOR BREAKDOWN											
						CODE J											
				S1620-63004-4	<78286>	..BULKHEAD ASSEMBLY.....		EA		1						50	
X2	F			S1620-63004-16	<78286>	...STIFFENER.....		EA		1						50	306
			5310-728-5510	MS21078-3	<96906>	...NUT,SELF-LOCKING,PLATE....		EA		2	*	*	*		*	50	310
X2	F			S1620-61949	<78286>	...ANGLE.....		EA		1						50	311
X2	F			S1620-61141-2	<78286>	...ANGLE.....		EA		1						50	314
			5320-680-3598	R3001T6-5	<29666>	...PIN,RIVET.....		EA		4	*	*	*			50	317
P	F		5320-489-4823	LCC6	<29666>	...COLLAR,RIVET PIN.....		EA		4	*	*	*		REF	50	
X2	F		1560-804-2456	S1620-61141-3	<78286>	...FILLER.....		EA		1	*	*	*		*	50	318
X2	F			S1620-61065-24	<78286>	...SUPPORT.....		EA		2						50	319
				MS20470AD4	<96906>	...RIVET.....		EA		2						50	321
				MS20470AD4	<96906>	...RIVET.....		EA		7						50	323
				MS20470AD4	<96906>	...RIVET.....		EA		7						50	326
X2	F			S1620-61066-3	<78286>	...STIFFENER.....		EA		1						50	328
X2	F			S1620-61955	<78286>	...ANGLE.....		EA		1						50	343
				MS20470AD4	<96906>	...RIVET.....		EA		1						50	345
X2	F		1560-672-7376	S1620-66313-2	<78286>	...SUPPORT ASSEMBLY.....		EA		1	*	*	*		*	50	346
X2	F		1560-672-7377	S1620-66314-2	<78286>	...SUPPORT ASSEMBLY.....		EA		1	*	*	*		*	50	348
X2	F			S1620-66337	<78286>	...ANGLE.....		EA		1						50	351
X2	F			S1620-61885-2	<78286>	...ANGLE.....CODE C		EA		1						50	354
P	F		1560-520-6308	S1620-61060-2	<78286>	...SUPPORT ASSEMBLY,.....		EA		1	*	*	*		*	50	358
						HYDRAULIC-LH CODE C											
P	F		1560-520-6307	S1620-61060-1	<78286>	...SUPPORT ASSEMBLY,.....		EA		1	*	*	*		*	50	
						HYDRAULIC-RH CODE D											
P	F		1560-633-6952	S1620-61544-4	<78286>	...HANDLE.....		EA		1	*	*	*		*	50	362
			5310-167-0801	AN960C10	<88044>	...WASHER,FLAT.....		HD		6	*	*	*		*	50	
			5310-877-5797	MS21044N3	<96906>	...NUT,SELF-LOCKING,HEXAGON..		EA		2	*	*	*		*	50	
			5306-182-1853	AN3CH4A	<88044>	...BOLT,MACHINE.....		EA		2	*	*	*		*	50	364
			5310-167-0801	AN960C10	<88044>	...WASHER,FLAT.....		HD		4	*	*	*		*	50	
				S1620-61904-7	<78286>	..FRAME INSTALLATION.....				1						50	
X2	F			S1620-61904-4	<78286>	...FRAME ASSEMBLY.....		EA		1						50	365
				S1620-61295	<78286>	..STRIKE PLATE INSTALLATION..				1						50	
P	D		1680-674-6933	S1620-61295-3	<78286>	...PLATE,STRIKE,FUSELAGE.....		EA		1	2	3	7		*	50	369
						ATTACHING PARTS											
			5306-182-2061	AN3H10A	<88044>	...BOLT,MACHINE.....		HD		2	*	*	*		*	50	370
			5310-167-0818	AN960-10	<88044>	...WASHER,FLAT.....		HD		2	*	*	*		*	50	
			5310-167-0753	AN960PD10L	<88044>	...WASHER,FLAT.....		HD		2	*	*	*		*	50	
			5310-877-5797	MS21044N3	<96906>	...NUT,SELF-LOCKING,HEXAGON..		EA		2	*	*	*		*	50	
						---*---											

(1) SOURCE, MAINT AND REC CODE (a) SOURCE CODE	(b) MAINT LEVEL	(c) REC CODE	(2) FEDERAL STOCK NUMBER	(3) DESCRIPTION REFERENCE NUMBER			MODELS USABLE ON CH-34C	(4) UNIT OF ISSUE	(5) QTY INC IN UNIT PACK	(6) QTY INC IN UNIT	(7) 30-DAY DS/GS MAINT ALW (a) 1-20	(b) 21-50	(c) 51-100	(8) 1-YR ALW PER 100 EQUIP CNTGCY	(9) DEPOT MAINT ALW PER 100 EQUIP	(10) ILLUSTRATION (a) FIG NO	(b) ITEM NO
				S1620-61131-9	<78286>	..FRAME INSTALLATION.....				1						50	
				S1620-61131-8	<78286>	...FRAME ASSEMBLY.....		EA		1						50	
				S1620-61167	<78286>	....BRACKET INSTALLATION.....				1						50	
MF	F			S1620-61668-1	<78286>	.....BRACKET.....		EA		1						50	372
						MAKEFR											
						AR 9535-554-1415 AL ALLY SH											
MF	F			S1620-61668-2	<78286>	.....BRACKET.....		EA		1						50	374
						MAKEFR											
						AR 9535-554-1415 AL ALLY SH											
				S1620-61132-14	<78286>	..FRAME INSTALLATION-RH.....				1						50	
P	F		1560-520-6310	S1620-61761	<78286>	....GUARD.....		EA		1	*	*	*		*	50	376
				S1620-61928-38	<78286>	..BULKHEAD INSTALLATION.....				1						50	
				S1620-61928-37	<78286>	...BULKHEAD ASSEMBLY.....		EA		1						50	
P	F		1560-633-0883	S1620-61891-3	<78286>	...CHANNEL,BULKHEAD.....		EA		1	*	*	REF		REF	50	379
MF	F			S1620-61891-4	<78286>	...SPACER.....		EA		11						50	381
						MAKEFR											
						AR 9330-576-3984 PLASTIC SH											
				S1620-61937	<78286>	..SIDE PANEL ASSEMBLY.....		EA		1						50	
				S1620-61133-2	<78286>	...FRAME INSTALLATION-CANTED.				1						50	
X2	F		1560-869-2422	S1620-61133-4	<78286>	....FRAME ASSEMBLY,FUSELAGE..		EA		1	*	*	*		*	50	
X2	F			S1620-61133-10	<78286>	.....PLATE-SPLICE.....		EA		1						50	382
				S1620-61703-4	<78286>	.....HINGE INSTALLATION.....				1						50	
P	F		1560-326-3438	S1620-61705-2	<78286>	.....HINGE,HALF,ENGINE.....		EA		1	*	2	2		*	50	383
						COMPARTMENT											
			5305-824-2021	MS24694C54	<96906>	.....SCREW,MACHINE.....		EA		4	*	*	*		*	50	384
			5310-167-0753	AN960PD10L	<88044>	.....WASHER,FLAT.....		HD		4	*	*	*		*	50	
			5310-877-5797	MS21044N3	<96906>	.....NUT,SELF-LOCKING,.....		EA		4	*	*	*		*	50	
						HEXAGON											
				S1620-61721-6	<78286>	.....FILLER.....		EA		1						50	387
				S1620-61703-2	<78286>	....HINGE INSTALLATION.....				1						50	
P	F		1560-326-3436	S1620-61704-2	<78286>	.....HINGE,HALF,ENGINE.....		EA		1	*	2	2		*	50	388
						COMPARTMENT											
			5305-824-2021	MS24694C54	<96906>	.....SCREW,MACHINE.....		EA		4	*	*	*		*	50	389
			5310-167-0753	AN960PD10L	<88044>	.....WASHER,FLAT.....		HD		4	*	*	*		*	50	
			5310-877-5797	MS21044N3	<96906>	.....NUT,SELF-LOCKING,HEXAGON		EA		4	*	*	*		*	50	
P	O		1560-854-9080	S1620-63033-2	<78286>	.LEG,STEP INSTALLATION FUSE..		EA		2	*	*	*		*	50	
				S1620-63033-1	<78286>	.STEP INSTALLATION.....				1						50	
X2	F		1560-919-7315	S1620-63033-3	<78286>	..STEP,FUSELAGE.....		EA		1	*	*	*		*	50	
X2	F			S1625-50156	<78286>	..CHAIN ASSEMBLY.....		EA		2						50	393
P	O		5315-973-2789	BLS4CLO-25	<84256>	..PIN,QUICK RELEASE RPLS....		EA		1	2	2	3		*	50	394
						5740-657-2981											
				S1620-66492	<78286>	.CLAMP INSTALLATION-INVERTOR.				1						50	
				S1620-66493-2	<78286>	..BAR ASSEMBLY.....		EA		2						50	395
						ATTACHING PARTS											
			5310-184-8980	AN960PD516L	<88044>	..WASHER,FLAT.....		HD		1	*	*	*		*	50	
						---*---											
				S1620-66493-1	<78286>	..ZEE ASSEMBLY.....		EA		2						50	397

(1) SOURCE, MAINT AND REC CODE (a) SOURCE CODE	(b) MAINT LEVEL	(c) REC CODE	(2) FEDERAL STOCK NUMBER	REFERENCE NUMBER		(3) DESCRIPTION	MODELS USABLE ON CH-34C	(4) UNIT OF ISSUE	(5) QTY INC IN UNIT PACK	(6) QTY INC IN UNIT	(7) 30-DAY DS, GS MAINT ALW (a) 1-20	(b) 21-50	(c) 51-100	(8) 1-YR ALW PER 100 EQUIP CNTGCY	(9) DEPOT MAINT ALW PER 100 EQUIP	(10) ILLUSTRATION (a) FIG NO	(b) ITEM NO
P	O		5325-171-4680	S3-175	<72794>	..LOCKSPRING,TURN LOCK.....		EA		1	*	*	*		*	50	
				S1620-61080-4	<78286>	.BRACKET INSTALLATION..... CONTROL GYRO AND AMPLIFIER				1						50	
P	F		1560-972-0258	S1620-61080-6	<78286>	..BRACKET,FORWARD FUSELAGE...		EA		1	*	*	*		*	50	
				S1620-63070	<78286>	.BRACKET INSTALLATION..... CONTROL GYRO AND AMPLIFIER				1						50	
P	F		1560-968-4667	S1607-5715	<78286>	..WASHER,BRACKET..... INSTALLATION		EA		4	*	*	*		*	50	
P	O		6615-787-4288	S1645-61125	<78286>	..COVER ASSEMBLY GYRO.....		EA		1	*	*	*		*	50	
P	F		1560-785-6773	S1645-61191	<78286>	..SPRING,HELICAL.....		EA		4	2	2	3		*	50	
P	F		1560-785-6774	S1645-61192	<78286>	..RETAINER,SPRING.....		EA		8	*	2	2		*	50	
P	F		5340-785-5457	1942	<94581>	..STRAP ASSEMBLY.....		EA		1	*	*	*		*	50	
P	F		1560-987-8926	S1607-2234-12	<78286>	..GUSSET,CONTROL GYRO.....		EA		1	*	*	*		*	50	
P	F		1560-987-8928	S1607-2234-7	<78286>	..GUSSET,CONTROL GYRO.....		EA		1	*	*	*		*	50	
P	F		1560-987-8927	S1607-2234-4	<78286>	..FILLER,CONTROL GYRO.....		EA		1	*	*	*		*	50	
P	F		1560-987-8925	S1607-2234-11	<78286>	..GUSSET,CONTROL GYRO.....		EA		1	*	*	*		*	50	
P	F		1560-987-8924	S1607-2234-10	<78286>	..BRACKET,ANGLE.....		EA		1	*	*	*		*	50	
P	F		1560-987-8930	S1607-2234-9	<78286>	..BRACKET,ANGLE.....		EA		1	*	*	*		*	50	
P	F		1560-987-8929	S1607-2234-8	<78286>	..GUSSET,CONTROL GYRO.....		EA		1	*	*	*		*	50	
P	F		1560-987-8931	S1620-63299-9	<78286>	..PLATE,SUPPORT,CONTROL GYRO.		EA		1	*	*	*		*	50	
X2	F		1560-022-9869	S1660-61031	<78286>	.DOUBLER,RADIO ANTENNA.....		EA		1	*	*	*		*	50	
						NOTE 1											
						U/O PN S1620-61391-6 ONLY											
						CODE A											
						USBL EFF 53-4475 THRU 54-2873											
						CODE C											
						USBL EFF 53-4475 THRU 54-3050											
						CODE D											
						USBL EFF 53-4475 THRU 56-4312											
						CODE E											
						USBL EFF 53-4475 THRU 56-4342											
						CODE F											
						USBL EFF 54-2874 & SUBSEQUENT											
						CODE G											
						USBL EFF 54-2882 THRU 56-4319											
						CODE H											
						USBL EFF 55-4462 & SUBSEQUENT											
						CODE I											
						USBL EFF 56-4312 THRU 57-1738											
						CODE J											
						USBL EFF 56-4313 & SUBSEQUENT											
						CODE K											
						USBL EFF 56-4320 & SUBSEQUENT											
						CODE L											
						USBL EFF 57-1684 & SUBSEQUENT											
						CODE M											
						USBL EFF 57-1739 & SUBSEQUENT											

(1) SOURCE, MAINT AND REC CODE (a) SOURCE CODE	(b) MAINT LEVEL	(c) REC CODE	(2) FEDERAL STOCK NUMBER	REFERENCE NUMBER	(3) DESCRIPTION	MODELS USABLE ON CH-34C	(4) UNIT OF ISSUE	(5) QTY INC IN UNIT PACK	(6) QTY INC IN UNIT	(7) 30-DAY DS GS MAINT ALW (a) 1-20	(b) 21-50	(c) 51-100	(8) 1-YR ALW PER 100 EQUIP CNTGCY	(9) DEPOT MAINT ALW PER 100 EQUIP	(10) ILLUSTRATION (a) FIG NO	(b) ITEM NO
				S1620-61139-9	<78286> LEFT HAND BULKHEAD..... INSTALLATION USBL EFF 53-4475 THRU 56-4312 SEE FIG.50 FOR NHA										51	
				S1620-61139-7	<78286> .FRAME ASSEMBLY-LH..... ATTACHING PARTS		EA		1						51	
			5306-182-2058	AN3H5A	<88044> .BOLT,MACHINE.....		EA		3	*	*	*		*	51	1
			5310-183-4406	AN960PD10	<88044> .WASHER,FLAT.....		HD		6	*	*	*		*	51	
			5310-877-5797	MS21044N3	<96906> .NUT,SELF-LOCKING,HEXAGON....		EA		3	*	*	*		*	51	
			5306-182-2059	AN3H6A	<88044> .BOLT,MACHINE.....		HD		5	*	*	*		*	51	2
			5310-183-4406	AN960PD10	<88044> .WASHER,FLAT.....		HD		10	*	*	*		*	51	
			5310-877-5797	MS21044N3	<96906> .NUT,SELF-LOCKING,HEXAGON....		EA		5	*	*	*		*	51	
				HS28-6-5	<73197> .RIVET.....		EA		3						51	
			5320-223-6093	NAS179-6	<80205> .COLLAR.....		EA		3	*	*	*			51	
					---*---											
P	D		1560-332-6550	S1620-61876-1	<78286> ..FITTING ASSEMBLY,..... TRANSMISSION ATTACHING PARTS		EA		1	*	*	*		*	51	4
P	D		5320-038-3265	ALPPHT8-8	<29666> ..PIN,RIVET.....		EA		1					*	51	5
P	D		5320-489-4824	LCC8	<29666> ..COLLAR,RIVET PIN.....		EA		1	*	*	*		REF	51	
P	D		5320-630-5713	ALPPHT8-6	<29666> ..PIN,RIVET.....		EA		2	*	*	*		REF	51	6
P	D		5320-489-4824	LCC8	<29666> ..COLLAR,RIVET PIN.....		EA		2	*	*	*		REF	51	
				MS20470AD4	<96906> ..RIVET.....		EA		1						51	7
P	D		5320-630-5713	ALPPHT8-6	<29666> ..PIN,RIVET.....		EA		6	*	*	*		REF	51	8
P	D		5320-489-4824	LCC8	<29666> ..COLLAR,RIVET PIN.....		EA		6	*	*	*		REF	51	
					---*---											
X2	F		1560-565-8495	S1650-61104	<78286> ..FITTING,SUPPORT,CO-PILOTS..		EA		1	*	*	*		*	51	
			5310-728-7708	MS21081-5	<96906> ..NUT,SELF-LOCKING,PLATE..... ATTACHING PARTS		EA		1	*	*	*		*	51	9
				MS20426AD3	<96906> ..RIVET.....		EA		2						51	
					---*---											
X2	F		1560-307-3625	S1620-61250-5	<78286> ..FITTING,FUSELAGE FORWARD... ATTACHING PARTS		EA		1	*	*	*		*	51	11
				MS20426AD6	<96906> ..RIVET.....		EA		2						51	
				MS20470AD6	<96906> ..RIVET.....		EA		7						51	
				ALPPH-T6-9	<29666> ..PIN,RIVET.....		EA		5						51	
P	F		5320-489-4823	LCC6	<29666> ..COLLAR,RIVET PIN.....		EA		5	*	*	*		REF	51	
				HS28-6-9	<73197> ..RIVET.....		EA		1						51	
			5320-223-6093	NAS179-6	<80205> ..COLLAR.....		EA		1	*	*	*			51	
				MS20470AD5	<96906> ..RIVET.....		EA		4						51	
			5306-182-2017	AN4H6A	<88044> ..BOLT,MACHINE.....		HD		6	*	*	*		*	51	17
			5310-141-1795	AN960-416	<88044> ..WASHER,FLAT.....		HD		12	*	*	*		*	51	
			5310-877-5796	MS21044N4	<96906> ..NUT,SELF-LOCKING,HEXAGON...		EA		6	*	*	*		*	51	
					---*---											
X2	F		1560-301-3547	S1620-61250-3	<78286> ..FITTING,FUSELAGE FORWARD... ATTACHING PARTS		EA		1	*	*	*		*	51	18
				MS20470AD5	<96906> ..RIVET.....		EA		3						51	
				MS20426AD6	<96906> ..RIVET.....		EA		4						51	
			5306-182-2017	AN4H6A	<88044> ..BOLT,MACHINE.....		HD		6	*	*	*		*	51	21
			5310-141-1795	AN960-416	<88044> ..WASHER,FLAT.....		HD		12	*	*	*		*	51	
			5310-877-5796	MS21044N4	<96906> ..NUT,SELF-LOCKING,HEXAGON...		EA		6	*	*	*		*	51	
					---*---											

(1) SOURCE MAINT AND REC CODE (a)	(b)	(c)	(2) FEDERAL STOCK NUMBER	REFERENCE NUMBER		(3) DESCRIPTION	MODELS USABLE ON CH-34C	(4) UNIT OF ISSUE	(5) QTY INC IN UNIT PACK	(6) QTY INC IN UNIT	(7) 30-DAY DS GS MAINT ALW (a) 1-20	(b) 21-50	(c) 51-100	(8) 1-YR ALW PER 100 EQUIP CNTGCY	(9) DEPOT MAINT ALW PER 100 EQUIP	(10) ILLUSTRATION (a) FIG NO	(b) ITEM NO
X2	D		1560-520-6309	S1620-61075-1	<78286>	..FITTING ASSEMBLY,FUSELAGE.. ATTACHING PARTS		EA		1	*	*	*		*	51	22
			5306-182-1959	AN4H11A	<88044>	..BOLT,MACHINE.....		HD		4	*	*	*		*	51	23
			5310-141-1795	AN960-416	<88044>	..WASHER,FLAT.....		HD		8	*	*	*		*	51	
			5310-877-5796	MS21044N4	<96906>	..NUT,SELF-LOCKING,HEXAGON...		EA		4	*	*	*		*	51	
				MS20470AD5	<96906>	..RIVET.....		EA		4						51	
			5306-292-8252	AN4H7A	<88044>	..BOLT,MACHINE.....		HD		2	*	*	*		*	51	25
			5310-141-1795	AN960-416	<88044>	..WASHER,FLAT.....		HD		4	*	*	*		*	51	
			5310-877-5796	MS21044N4	<96906>	..NUT,SELF-LOCKING,HEXAGON...		EA		2	*	*	*		*	51	
				MS20426AD5	<96906>	..RIVET.....		EA		2						51	
						---*---											
			5306-207-4594	NAS428H4-6	<80205>	..BOLT,MACHINE.....		EA		2	*	*	*		*	51	27
			5310-316-8956	AN316-4R	<88044>	..NUT,PLAIN,HEXAGON.....		HD		2		*	*		*	51	
						RIGHT HAND BULKHEAD..... INSTALLATION USBL EFF 53-4475 THRU 56-4312										52	
				S1620-61139-10	<78286>	RIGHT HAND BULKHEAD..... INSTALLATION USBL EFF 53-4475 THRU 56-4312 SEE FIG.50 FOR NHA										52	
				S1620-61139-8	<78286>	.FRAME ASSEMBLY-RH..... ATTACHING PARTS		EA		1						52	
			5306-182-2058	AN3H5A	<88044>	.BOLT,MACHINE.....		EA		3	*	*	*		*	52	1
			5310-183-4406	AN960PD10	<88044>	.WASHER,FLAT.....		HD		6	*	*	*		*	52	
			5310-877-5797	MS21044N3	<96906>	.NUT,SELF-LOCKING,HEXAGON....		EA		3	*	*	*		*	52	
			5306-182-2059	AN3H6A	<88044>	.BOLT,MACHINE.....		HD		5	*	*	*		*	52	2
			5310-183-4406	AN960PD10	<88044>	.WASHER,FLAT.....		HD		10	*	*	*		*	52	
			5310-877-5797	MS21044N3	<96906>	.NUT,SELF-LOCKING,HEXAGON....		EA		5	*	*	*		*	52	
				MS2047086	<96906>	.RIVET.....		EA		3						52	
						---*---											
X2	F		1560-301-3548	S1620-61256-2	<78286>	..FITTING,FUSELAGE FORWARD... ATTACHING PARTS		EA		1	*	*	*		*	52	4
				ALP426H-T8-7	<29666>	..LOCK BOLT.....		EA		2						52	
P	F		5320-489-4824	LCC8	<29666>	..COLLAR,RIVET PIN.....		EA		2	*	*	*		REF	52	
				HS28-6-4	<73197>	..RIVET-HI-SHEAR.....		EA		6						52	
			5320-223-6093	NAS179-6	<80205>	..COLLAR-HI-SHEAR.....		EA		6	*	*	*			52	
						---*---											
				S1620-61255-2	<78286>	..TEE..... ATTACHING PARTS		EA		1						52	
			5320-531-0792	NAS1466-4	<80205>	..PIN,RIVET.....		EA		2	*	*	*		*	52	
P	F		5320-489-4823	LCC6	<29666>	..COLLAR,RIVET PIN.....		EA		2	*	*	*		REF	52	
P	F		5320-531-0719	ALPPHT6-7	<29666>	..PIN,RIVET.....		EA		1					REF	52	9
P	F		5320-489-4823	LCC6	<29666>	..COLLAR,RIVET PIN.....		EA		1	*	*	*		REF	52	
	F		5320-619-0157	ALPPHT6-6	<29666>	..PIN,RIVET.....		EA		1	*	*	*		REF	52	
P	F		5320-489-4823	LCC6	<29666>	..COLLAR,RIVET PIN.....		EA		1	*	*	*		REF	52	
				MS20426AD5	<96906>	..RIVET.....		EA		1						52	

(1) SOURCE, MAINT AND REC CODE (a) SOURCE CODE	(b) MAINT LEVEL	(c) REC CODE	(2) FEDERAL STOCK NUMBER	REFERENCE NUMBER	(3) DESCRIPTION	MODELS USABLE ON CH-34C	(4) UNIT OF ISSUE	(5) QTY INC IN UNIT PACK	(6) QTY INC IN UNIT	(7) 30-DAY DS/GS MAINT ALW (a) 1-20	(b) 21-50	(c) 51-100	(8) 1-YR ALW PER 100 EQUIP CNTGCY	(9) DEPOT MAINT ALW PER 100 EQUIP	(10) ILLUSTRATION (a) FIG NO	(b) ITEM NO
					CONTINUED										52	
					---*---											
X2	F			S1620-61259-3 <78286>	..DOUBLER.....		EA		1						52	12
					ATTACHING PARTS											
P	F		5320-531-0791	ALPPHT8-7 <29666>	..PIN,RIVET.....		EA		3	*	*	*		*	52	13
P	F		5320-489-4824	LCC8 <29666>	..COLLAR,RIVET PIN.....		EA		3	*	*	*		REF	52	
P	F		5320-630-5713	ALPPHT8-6 <29666>	..PIN,RIVET.....		EA		3	*	*	*		REF	52	14
P	F		5320-489-4824	LCC8 <29666>	..COLLAR,RIVET PIN.....		EA		3	*	*	*		REF	52	
				MS20470B5 <96906>	..RIVET.....		EA		1						52	
				MS20426B5 <96906>	..RIVET.....		EA		1						52	
					---*---											
X2	F		1560-304-4650	S1650-61108 <78286>	..SUPPORT,SEAT ATTACHMENT....		EA		1	*	*	*		*	52	17
					ATTACHING PARTS											
				MS20470B5 <96906>	..RIVET.....		EA		10						52	
				MS20426AD5 <96906>	..RIVET.....		EA		4						52	
			5306-182-1959	AN4H11A <88044>	..BOLT,MACHINE.....		HD		4	*	*	*		*	52	20
			5310-141-1795	AN960-416 <88044>	..WASHER,FLAT.....		HD		8	*	*	*		*	52	
			5310-877-5796	MS21044N4 <96906>	..NUT,SELF-LOCKING,HEXAGON...		EA		4	*	*	*		*	52	
					---*---											
X2	F			S1650-61109 <78286>	..SPACER.....		EA		1						52	21
X2	F			S1620-61261-2 <78286>	..TIE PLATE.....		EA		1						52	22
					ATTACHING PARTS											
				MS20426AD6 <96906>	..RIVET.....		EA		22						52	
				MS20470AD5 <96906>	..RIVET.....		EA		65						52	
					---*---											
X2	F			S1620-61258 <78286>	..SUPPORT-SEAT.....		EA		1						52	25
					ATTACHING PARTS											
			5306-182-2017	AN4H6A <88044>	..BOLT,MACHINE.....		HD		1	*	*	*		*	52	26
			5310-141-1795	AN960-416 <88044>	..WASHER,FLAT.....		HD		2	*	*	*		*	52	
			5310-877-5796	MS21044N4 <96906>	..NUT,SELF-LOCKING,HEXAGON...		EA		1	*	*	*		*	52	
			5306-182-2017	AN4H6A <88044>	..BOLT,MACHINE.....		HD		1	*	*	*		*	52	27
			5310-141-1795	AN960-416 <88044>	..WASHER,FLAT.....		HD		1	*	*	*		*	52	
				AN950-1 <88044>	..WASHER.....		EA		1						52	
			5310-877-5796	MS21044N4 <96906>	..NUT,SELF-LOCKING,HEXAGON...		EA		1	*	*	*		*	52	
				MS20470B5 <96906>	..RIVET.....		EA		4						52	
P	F		5320-531-0736	ALPPHT8-10 <29666>	..PIN,RIVET.....		EA		4	*	*	*		*	52	29
P	F		5320-489-4824	LCC8 <29666>	..COLLAR,RIVET PIN.....		EA		4	*	*	*		REF	52	
					---*---											
				S1620-61259-4 <78286>	..FILLER PLATE.....		EA		1						52	
P	F		1560-565-8494	S1650-61103-2 <78286>	..FITTING,SUPPORT,PILOTS SEAT		EA		1	*	*	*		*	52	31
					ATTACHING PARTS											
				ALP426HT8-6 <29666>	..PIN,RIVET.....		EA		1						52	
P	F		5320-489-4823	LCC6 <29666>	..COLLAR,RIVET PIN.....		EA		1	*	*	*		REF	52	
P	F		5320-038-3265	ALPPHT8-8 <29666>	..PIN,RIVET.....		EA		2					*	52	33
P	F		5320-489-4824	LCC8 <29666>	..COLLAR,RIVET PIN.....		EA		2	*	*	*		REF	52	
				MS20470B5 <96906>	..RIVET.....		EA		15						52	
					---*---											
X2	F			S1650-61105 <78286>	..SPACER.....		EA		1						52	35
				S1620-61174-2 <78286>	..FITTING-TEE.....		EA		1						52	
					ATTACHING PARTS											
P	F		5320-531-0715	ALPPHT6-8 <29666>	..PIN,RIVET.....		EA		4	*	*	*		*	52	37
P	F		5320-489-4823	LCC6 <29666>	..COLLAR,RIVET PIN.....		EA		4	*	*	*		REF	52	

(1) SOURCE, MAINT AND REC CODE (a) SOURCE CODE	(b) MAINT LEVEL	(c) REC CODE	(2) FEDERAL STOCK NUMBER	(3) DESCRIPTION REFERENCE NUMBER			MODELS USABLE ON CH-34C	(4) UNIT OF ISSUE	(5) QTY INC IN UNIT PACK	(6) QTY INC IN UNIT	(7) 30-DAY DS GS MAINT ALW (a) 1-20	(b) 21-50	(c) 51-100	(8) 1-YR ALW PER 100 EQUIP CNTGCY	(9) DEPOT MAINT ALW PER 100 EQUIP	(10) ILLUSTRATION (a) FIG NO	(b) ITEM NO
						CONTINUED										52	
						---*---											
P	D		1560-332-6551	S1620-61876-2	<78286>	..FITTING ASSEMBLY,..... TRANSMISSION		EA		1	*	*	*		*	52	37A
			5310-728-7708	MS21081-5	<96906>	..NUT,SELF-LOCKING,PLATE..... ATTACHING PARTS		EA		1	*	*	*		*	52	38
				MS20426AD	<96906>	..RIVET.....		EA		2						52	
						---*---											
X2	D		1560-307-3624	S1620-61250-4	<78286>	..FITTING,FUSELAGE FORWARD... ATTACHING PARTS		EA		1	*	*	*		*	52	40
				MS20426AD6	<96906>	..RIVET.....		EA		4						52	
				MS20470AD6	<96906>	..RIVET.....		EA		7						52	
			5320-680-4456	ALPPHT6-9	<29666>	..PIN,RIVET.....		EA		6	*	*	*			52	43
P	D		5320-489-4823	LCC6	<29666>	..COLLAR,RIVET PIN.....		EA		6	*	*	*		REF	52	
				MS20470AD5	<96906>	..RIVET.....		EA		4						52	
			5306-182-2017	AN4H6A	<88044>	..BOLT,MACHINE.....		HD		6	*	*	*		*	52	45
			5310-141-1795	AN960-416	<88044>	..WASHER,FLAT.....		HD		12	*	*	*		*	52	
			5310-877-5796	MS21044N4	<96906>	..NUT,SELF-LOCKING,HEXAGON...		EA		6	*	*	*		*	52	
						---*---											
X2	F		1560-307-3626	S1620-61250-6	<78286>	..FITTING,FUSELAGE FORWARD... ATTACHING PARTS		EA		1	*	*	*		*	52	46
			5306-182-2017	AN4H6A	<88044>	..BOLT,MACHINE.....		HD		6	*	*	*		*	52	47
			5310-141-1795	AN960-416	<88044>	..WASHER,FLAT.....		HD		12	*	*	*		*	52	
			5310-877-5796	MS21044N4	<96906>	..NUT,SELF-LOCKING,HEXAGON...		EA		6	*	*	*		*	52	
				MS20470AD5	<96906>	..RIVET.....		EA		3						52	
						---*---											
X2	F		1560-520-1016	S1620-61075-2	<78286>	..FITTING ASSEMBLY,..... FUSELAGE,FORWARD SECTION ATTACHING PARTS		EA		1	*	*	*		*	52	
			5306-182-1959	AN4H11A	<88044>	..BOLT,MACHINE.....		HD		4	*	*	*		*	52	
			5310-141-1795	AN960-416	<88044>	..WASHER,FLAT.....		HD		8	*	*	*		*	52	
			5310-877-5796	MS21044N4	<96906>	..NUT,SELF-LOCKING,HEXAGON...		EA		4	*	*	*		*	52	
						---*---											
			5306-282-0921	NAS428H4-6	<80205>	..BOLT,MACHINE.....		EA		1	*	*	*		*	52	48B
			5310-316-8956	AN316-4R	<88044>	..NUT,PLAIN,HEXAGON.....		HD		2	*	*	*		*	52	
				S1620-61546	<78286>	..HANDLE INSTALLATION.....				1						52	
P	F		1560-326-3429	S1620-61544	<78286>	...HANDLE,FUSELAGE SECTION... ATTACHING PARTS		EA		1	*	*	*		*	52	49
			5306-559-8134	AN3DDH5A	<88044>	...BOLT,MACHINE.....		EA		4	*	*	*		*	52	50
			5310-183-4406	AN960PD10	<88044>	...WASHER,FLAT.....		HD		4	*	*	*		*	52	
			5310-877-5798	MS21044D3	<96906>	...NUT,SELF-LOCKING,HEXAGON..		EA		4	*	*	*		*	52	
						---*---											
				S1620-61295	<78286>	..STRIKE PLATE INSTALLATION..				1						52	
P	D		1680-674-6933	S1620-61295-3	<78286>	...PLATE,STRIKE,FUSELAGE..... ATTACHING PARTS		EA		1	REF	REF	REF		REF	52	51
			5306-182-2061	AN3H10A	<88044>	...BOLT,MACHINE.....		HD		2	*	*	*		*	52	52
			5310-167-0818	AN960-10	<88044>	...WASHER,FLAT.....		HD		2	*	*	*		*	52	
			5310-167-0753	AN960PD10L	<88044>	...WASHER,FLAT.....		HD		2	*	*	*		*	52	
			5310-877-5797	MS21044N3	<96906>	...NUT,SELF-LOCKING,HEXAGON..		EA		2	*	*	*		*	52	
						---*---											
				S1620-61295-2	<78286>	...BLOCK-FILLER.....		EA		1						52	

(1) SOURCE, MAINT AND REC CODE (a) SOURCE CODE	(b) MAINT LEVEL	(c) REC CODE	(2) FEDERAL STOCK NUMBER	REFERENCE NUMBER		(3) DESCRIPTION	MODELS USABLE ON CH-34C	(4) UNIT OF ISSUE	(5) QTY INC IN UNIT PACK	(6) QTY INC IN UNIT	(7) 30-DAY DS GS MAINT ALW (a) 1-20	(b) 21-50	(c) 51-100	(8) 1-YR ALW PER 100 EQUIP CNTGCY	(9) DEPOT MAINT ALW PER 100 EQUIP	(10) ILLUSTRATION (a) FIG NO	(b) ITEM NO
				S1620-61990-22	<78286>	BULKHEAD INSTALLATION USBL.. EFF 56-4313 AND SUBSEQUENT SEE FIG.50 FOR NHA										53	
X2	F			S1620-61990-21	<78286>	.BULKHEAD ASSEMBLY.....		EA		1						53	1
						ATTACHING PARTS											
			5306-182-2060	AN3H7A	<88044>	.BOLT,MACHINE.....		HD		5	*	*	*		*	53	2
			5310-183-4406	AN960PD10	<88044>	.WASHER,FLAT.....		HD		10	*	*	*		*	53	
			5310-877-5797	MS21044N3	<96906>	.NUT,SELF-LOCKING,HEXAGON....		EA		5	*	*	*		*	53	
				MS20470B6	<96906>	.RIVET.....		EA		3						53	
X2	F			S1620-61599-8	<78286>	.SHIM.....		EA		2						53	4
						---*---											
X2	F			S1620-61990-33	<78286>	.ANGLE.....		EA		1						53	
X2	F			S1620-61990-12	<78286>	..WEB-LH.....		EA		1						53	5
X2	F			S1620-61990-13	<78286>	..WEB-RH.....		EA		1						53	
						ATTACHING PARTS											
				MS20470AD5	<96906>	..RIVET U/O.....		EA		89						53	
						PN S1620-61990-13											
				MS20470AD5	<96906>	..RIVET U/O.....		EA		76						53	
						PN S1620-61990-12											
						---*---											
				S1620-61990-5	<78286>	..ANGLE.....		EA		1						53	
X2	F		1560-625-4512	S1620-61989-6	<78286>	...SUPPORT,FITTING.....		EA		1	*	*	*		*	53	
				S1620-61990-7	<78286>	..ANGLE.....		EA		1						53	
				S1620-61990-8	<78286>	..ANGLE.....		EA		1						53	
				S1620-61990-10	<78286>	..ANGLE.....		EA		1						53	
X2	F			S1620-61990-14	<78286>	..ANGLE.....		EA		1						53	9
						ATTACHING PARTS											
P	F		5320-531-0793	ALPPHT8-5	<29666>	..PIN,RIVET.....		EA		2	*	*	*		*	53	10
P	F		5320-489-4824	LCC8	<29666>	..COLLAR,RIVET PIN.....		EA		2	*	*	*		REF	53	
P	F		5320-531-0719	ALPPHT6-7	<29666>	..PIN,RIVET.....		EA		2					REF	53	11
P	F		5320-489-4824	LCC8	<29666>	..COLLAR,RIVET PIN.....		EA		2	*	*	*		REF	53	
				MS20470AD5	<96906>	..RIVET.....		EA		12						53	
						---*---											
X2	F			S1620-61990-15	<78286>	..DOUBLER.....		EA		1						53	13
						ATTACHING PARTS											
P	F		5320-619-0157	ALPPHT6-6	<29666>	..PIN,RIVET.....		EA		2	*	*	*		REF	53	14
P	F		5320-489-4823	LCC6	<29666>	..COLLAR,RIVET PIN.....		EA		2	*	*	*		REF	53	
P	H		5320-680-3598	ALPPHT6-5	<29666>	..PIN,RIVET.....		EA		1						53	15
P	F		5320-489-4823	LCC6	<29666>	..COLLAR,RIVET PIN.....		EA		1	*	*	*		REF	53	
				MS20426AD4	<96906>	..RIVET.....		EA		18						53	
				MS20470AD6	<96906>	..RIVET.....		EA		3						53	
				MS20470AD5	<96906>	..RIVET.....		EA		35						53	18
						---*---											
MF	F			S1620-61139-11	<78286>	..FILLER,BULKHEAD.....		EA		1						53	
						MAKEFR											
						AR 9535-554-1414 AL ALLY SH											
P	D		1560-332-6550	S1620-61876-1	<78286>	..FITTING ASSEMBLY,.....		EA		1	*	*	*		REF	53	
						TRANSMISSION											
P	D		1560-332-6551	S1620-61876-2	<78286>	..FITTING ASSEMBLY,.....		EA		1	*	*	*		REF	53	
						TRANSMISSION											

(1) SOURCE, MAINT AND REC CODE (a) SOURCE	(b) MAINT	(c) REC CODE	(2) FEDERAL STOCK NUMBER	(3) DESCRIPTION REFERENCE NUMBER			MODELS USABLE ON CH-34C	(4) UNIT OF ISSUE	(5) QTY INC IN UNIT PACK	(6) QTY INC IN UNIT	(7) 30-DAY DS GS MAINT ALW (a) 1-20	(b) 21-50	(c) 51-100	(8) 1-YR ALW PER 100 EQUIP CNTGCY	(9) DEPOT MAINT ALW PER 100 EQUIP	(10) ILLUSTRATION (a) FIG NO	(b) ITEM NO
				S1625-61000-3	<78286>	MAIN WHEEL BRAKE SYSTEM..... INSTALLATION SEE FIG.40 FOR NHA										54	
				S1625-61050-33	<78286>	.LINES INSTALLATION-BRAKE....				1						54	
P	F		4730-033-4554	155S4-4S	<00624>	..COUPLING,HALF,FLUID LINE...		EA		AR	*	*	*		*	54	
P	G		4720-935-1598	MS27363E0170	<96906>	..HOSE ASSEMBLY,RUBBER.....		EA		AR					*	54	1
AF	F			S1625-61050-23	<78286>	..TUBE ASSEMBLY.....		EA		1						54	2
			4730-287-0289	AN818-4D	<88044>	...NUT,TUBE COUPLING.....		EA		2	*	*	*		*	54	3
			4730-302-8641	MS20819-4D	<96906>	...SLEEVE,FLARED TUBE FITTING		EA		2	*	*	*		*	54	4
				S1625-61050-25	<78286>	...TUBE.....		EA		1						54	
			4730-834-9560	MS24392D4	<96906>	..NIPPLE,TUBE.....		EA		1	REF	REF	REF	REF	*	54	6
			5330-805-2966	MS28778-4	<96906>	..PACKING,PREFORMED.....		EA		2	REF	REF	REF	REF	*	54	
AF	F			S1625-61050-17	<78286>	..TUBE ASSEMBLY.....		EA		1						54	7
			4730-287-0289	AN818-4D	<88044>	...NUT,TUBE COUPLING.....		EA		2	*	*	*		*	54	8
			4730-302-8641	MS20819-4D	<96906>	...SLEEVE,FLARED TUBE FITTING		EA		2	*	*	*		*	54	9
				S1625-61050-21	<78286>	...TUBE.....		EA		1						54	
P	F		1630-766-3488	S1625-61050-29	<78286>	..TUBE ASSEMBLY.....		EA		1	*	*	*		*	54	11
			4730-287-0289	AN818-4D	<88044>	...NUT,TUBE COUPLING.....		EA		2	*	*	*		*	54	12
			4730-278-0678	AN819-4	<88044>	...SLEEVE,FLARED TUBE FITTING		EA		2	*	*	*		*	54	13
				S1625-61050-11	<78286>	...TUBE.....		EA		1						54	
			4730-933-0942	MS24401-4	<96906>	..ELBOW.....		EA		1					*	54	15
AF	F			S1625-61050-31	<78286>	..TUBE ASSEMBLY.....		EA		1						54	16
			4730-334-7845	AN818-4	<88044>	...NUT,TUBE COUPLING.....		EA		2	*	*	*		*	54	17
			4730-278-0678	MS20819-4	<96906>	...SLEEVE,FLARED TUBE FITTING		EA		2	*	*	*		*	54	18
				S1625-61050-32	<78286>	...TUBE.....		EA		1						54	
			4730-834-9560	MS24392D4	<96906>	..NIPPLE,TUBE.....		EA		1	REF	REF	REF	REF	*	54	20
			4730-278-3682	AN939D4	<88044>	..ELBOW,BOSS.....		EA		1	*	*	*		*	54	21
			4730-277-6371	AN6289D4	<88044>	..LOCKNUT,TUBE FITTING.....		EA		1	*	*	*		*	54	22
			5330-805-2966	MS28778-4	<96906>	..PACKING,PREFORMED.....		EA		1	REF	REF	REF	REF	*	54	23
			5330-186-4947	MS28777-4	<96906>	..WASHER,NONMETALLIC.....		LL		1	*	*	*		*	54	24
P	F		4730-033-4554	155S4-4D	<00624>	..COUPLING HALF,..... SELF-SEALING		EA		1	*	*	*		*	54	25
						ATTACHING PARTS											
			5305-989-7434	MS35207-263	<96906>	..SCREW,MACHINE.....				4					*	54	26
			5310-183-4406	AN960PD10	<88044>	..WASHER,FLAT.....		HD		4	*	*	*		*	54	
			5310-877-5797	MS21044N3	<96906>	..NUT,SELF-LOCKING,HEXAGON...		EA		4	*	*	*		*	54	
						---*---											
AF	G			S1625-61050-24	<78286>	..TUBE ASSEMBLY,BRAKE SYSTEM.		EA		1						54	27
			4730-287-0289	AN818-4D	<88044>	...NUT,TUBE COUPLING.....		EA		2	*	*	*		*	54	28
			4730-302-8641	MS20819-4D	<96906>	...SLEEVE,FLARED TUBE FITTING		EA		2	*	*	*		*	54	29
				S1625-61050-26	<78286>	...TUBE.....		EA		1						54	
			4730-834-9560	MS24392D4	<96906>	..NIPPLE,TUBE.....		EA		1	REF	REF	REF	REF	*	54	31
AF	F			S1625-61050-18	<78286>	..TUBE ASSEMBLY,BRAKE.....		EA		1						54	32
			4730-287-0289	AN818-4D	<88044>	...NUT,TUBE COUPLING.....		EA		2	*	*	*		*	54	33
			4730-302-8641	MS20819-4D	<96906>	...SLEEVE,FLARED TUBE FITTING		EA		2	*	*	*		*	54	34
				S1625-61050-22	<78286>	...TUBE.....		EA		1						54	35
MF	F			S1625-61053-2	<78286>	...TUBE..... MAKEFR		EA		1						54	
						AR PN S1625-61053-7 TUBE											
						2 EA 4730-334-7845 NUT											
						2 EA 4730-278-0678 SLEEVE											
				S1625-61050-6	<78286>	..TUBE ASSEMBLY.....		EA		1						54	36

SOURCE MAINT AND REC CODE (a) SOURCE CODE	(b) MAINT CODE	(c) REC CODE	(2) FEDERAL STOCK NUMBER	(3) DESCRIPTION REFERENCE NUMBER			MODELS USABLE ON CH-34C	(4) UNIT OF ISSUE	(5) QTY INC IN UNIT PACK	(6) QTY INC IN UNIT	(7) 30-DAY DS GS MAINT ALW (a) 1-20	(b) 21-50	(c) 51-100	(8) 1-YR ALW PER 100 EQUIP CNTGCY	(9) DEPOT MAINT ALW PER 100 EQUIP	(10) ILLUSTRATION (a) FIG NO	(b) ITEM NO
				S1625-61000-3	<78286>	MAIN WHEEL BRAKE SYSTEM..... INSTALLATION SEE FIG.40 FOR NHA										54	
				S1625-61050-33	<78286>	.LINES INSTALLATION-BRAKE....				1						54	
P	F		4730-033-4554	155S4-4S	<00624>	..COUPLING,HALF,FLUID LINE...		EA		AR	*	*	*		*	54	
P	O		4720-935-1598	MS27363E0170	<96906>	..HOSE ASSEMBLY,RUBBER.....		EA		AR					*	54	1
AF	F			S1625-61050-23	<78286>	..TUBE ASSEMBLY.....		EA		1						54	2
			4730-287-0289	AN818-4D	<88044>	...NUT,TUBE COUPLING.....		EA		2	*	*	*		*	54	3
			4730-302-8641	MS20819-4D	<96906>	...SLEEVE,FLARED TUBE FITTING		EA		2	*	*	*		*	54	4
				S1625-61050-25	<78286>	...TUBE.....		EA		1						54	
			4730-834-9560	MS24392D4	<96906>	..NIPPLE,TUBE.....		EA		1	REF	REF	REF	REF	*	54	6
			5330-805-2966	MS28778-4	<96906>	..PACKING,PREFORMED.....		EA		2	REF	REF	REF	REF	*	54	
AF	F			S1625-61050-17	<78286>	..TUBE ASSEMBLY.....		EA		1						54	7
			4730-287-0289	AN818-4D	<88044>	...NUT,TUBE COUPLING.....		EA		2	*	*	*		*	54	8
			4730-302-8641	MS20819-4D	<96906>	...SLEEVE,FLARED TUBE FITTING		EA		2	*	*	*		*	54	9
				S1625-61050-21	<78286>	...TUBE.....		EA		1						54	
P	F		1630-766-3488	S1625-61050-29	<78286>	..TUBE ASSEMBLY.....		EA		1	*	*	*		*	54	11
			4730-287-0289	AN818-4D	<88044>	...NUT,TUBE COUPLING.....		EA		2	*	*	*		*	54	12
			4730-278-0678	AN819-4	<88044>	...SLEEVE,FLARED TUBE FITTING		EA		2	*	*	*		*	54	13
				S1625-61050-11	<78286>	...TUBE.....		EA		1						54	
			4730-933-0942	MS24401-4	<96906>	..ELBOW.....		EA		1					*	54	15
AF	F			S1625-61050-31	<78286>	..TUBE ASSEMBLY.....		EA		1						54	16
			4730-334-7845	AN818-4	<88044>	...NUT,TUBE COUPLING.....		EA		2	*	*	*		*	54	17
			4730-278-0678	MS20819-4	<96906>	...SLEEVE,FLARED TUBE FITTING		EA		2	*	*	*		*	54	18
				S1625-61050-32	<78286>	...TUBE.....		EA		1						54	
			4730-834-9560	MS24392D4	<96906>	..NIPPLE,TUBE.....		EA		1	REF	REF	REF	REF	*	54	20
			4730-278-3682	AN939D4	<88044>	..ELBOW,BOSS.....		EA		1	*	*	*		*	54	21
			4730-277-6371	AN6289D4	<88044>	..LOCKNUT,TUBE FITTING.....		EA		1	*	*	*		*	54	22
			5330-805-2966	MS28778-4	<96906>	..PACKING,PREFORMED.....		EA		1	REF	REF	REF	REF	*	54	23
			5330-186-4947	MS28777-4	<96906>	..WASHER,NONMETALLIC.....		LL		1	*	*	*		*	54	24
P	F		4730-033-4554	155S4-4D	<00624>	..COUPLING HALF,..... SELF-SEALING		EA		1	*	*	*		*	54	25
						ATTACHING PARTS											
			5305-989-7434	MS35207-263	<96906>	..SCREW,MACHINE.....				4					*	54	26
			5310-183-4406	AN960PD10	<88044>	..WASHER,FLAT.....		HD		4	*	*	*		*	54	
			5310-877-5797	MS21044N3	<96906>	..NUT,SELF-LOCKING,HEXAGON...		EA		4	*	*	*		*	54	
						---*---											
AF	O			S1625-61050-24	<78286>	..TUBE ASSEMBLY,BRAKE SYSTEM.		EA		1						54	27
			4730-287-0289	AN818-4D	<88044>	...NUT,TUBE COUPLING.....		EA		2	*	*	*		*	54	28
			4730-302-8641	MS20819-4D	<96906>	...SLEEVE,FLARED TUBE FITTING		EA		2	*	*	*		*	54	29
				S1625-61050-26	<78286>	...TUBE.....		EA		1						54	
			4730-834-9560	MS24392D4	<96906>	..NIPPLE,TUBE.....		EA		1	REF	REF	REF	REF	*	54	31
AF	F			S1625-61050-18	<78286>	..TUBE ASSEMBLY,BRAKE.....		EA		1						54	32
			4730-287-0289	AN818-4D	<88044>	...NUT,TUBE COUPLING.....		EA		2	*	*	*		*	54	33
			4730-302-8641	MS20819-4D	<96906>	...SLEEVE,FLARED TUBE FITTING		EA		2	*	*	*		*	54	34
				S1625-61050-22	<78286>	...TUBE.....		EA		1						54	35
MF	F			S1625-61053-2	<78286>	...TUBE..... MAKEFR		EA		1						54	
						AR PN S1625-61053-7 TUBE											
						2 EA 4730-334-7845 NUT											
						2 EA 4730-278-0678 SLEEVE											
				S1625-61050-6	<78286>	..TUBE ASSEMBLY.....		EA		1						54	36

(1) SOURCE, MAINT AND REC CODE (a) SOURCE CODE	(b) MAINT LEVEL	(c) REC CODE	(2) FEDERAL STOCK NUMBER	REFERENCE NUMBER		(3) DESCRIPTION	MODELS USABLE ON CH-34C	(4) UNIT OF ISSUE	(5) QTY INC IN UNIT PACK	(6) QTY INC IN UNIT	(7) 30-DAY DS/GS MAINT ALW (a) 1-20	(b) 21-50	(c) 51-100	(8) 1-YR ALW PER 100 EQUIP CNTGCY	(9) DEPOT MAINT ALW PER 100 EQUIP	(10) ILLUSTRATION (a) FIG NO	(b) ITEM NO
AF	F			S1625-61053-3	<78286>	..TUBE ASSEMBLY.....		EA		1						54	
			4730-287-0289	AN818-4D	<88044>	...NUT,TUBE COUPLING.....		EA		2	*	*	*		*	54	37
			4730-278-0678	MS20819-4	<96906>	...SLEEVE,FLARED TUBE FITTING		EA		2	*	*	*		*	54	38
MF	F			S1625-61053-7	<78286>	...TUBE.....		EA		1						54	39
						MAKEFR											
						AR 4730-334-7845 NUT											
						AR 4730-278-0678 SLEEVE											
						1 EA S1625-61053-7 TUBE											
			4730-933-0942	MS24401-4	<96906>	..ELBOW,TUBE.....		EA		1					*	54	40
MF	F			S1625-61053-4	<78286>	..TUBE ASSEMBLY.....		EA		1						54	41
						MAKEFR											
						AR 4710-202-9731 TUBE											
						2 EA 4730-969-0605 SLEEVE											
						2 EA 4730-230-2658 NUT											
			4730-334-7845	AN818-4	<88044>	...NUT,TUBE COUPLING.....		EA		2	*	*	*		*	54	
			4730-278-0678	MS20819-4	<96906>	...SLEEVE,FLARED TUBE FITTING		EA		2	*	*	*		*	54	
			4730-834-9560	MS24392D4	<96906>	..NIPPLE,TUBE.....		EA		1	REF	REF	REF	REF	*	54	45
			4730-277-6371	AN6289D4	<88044>	..LOCKNUT,TUBE FITTING.....		EA		1	*	*	*		*	54	46
			5330-805-2966	MS28778-4	<96906>	..PACKING,PREFORMED.....		EA		1	REF	REF	REF	REF	*	54	47
			5330-186-4947	MS28777-4	<96906>	..WASHER,NONMETALLIC.....		LL		1	*	*	*		*	54	48
			4730-278-3682	AN939D4	<88044>	..ELBOW,BOSS.....		EA		1	*	*	*		*	54	49
P	F		4730-033-4554	155S4-4D	<00624>	..COUPLING HALF,.....		EA		1	*	*	*		REF	54	50
						SELF-SEALING											
						ATTACHING PARTS											
			5305-989-7434	MS35207-263	<96906>	..SCREW,MACHINE.....				4					*	54	51
			5310-183-4406	AN960PD10	<88044>	..WASHER,FLAT.....		HD		4	*	*	*		*	54	
			5310-877-5797	MS21044N3	<96906>	..NUT,SELF-LOCKING,HEXAGON...		EA		4	*	*	*		*	54	
						----*----											
				S1625-61020-2	<78286>	.VALVE AND HANDLE.....				1						54	
						INSTALLATION											
			5315-234-1856	MS24665-155	<96906>	..PIN,COTTER.....		HD		1	*	*	*		*	54	52
			1560-341-0855	S1525-61031	<78286>	..SPRING,HELICAL,.....		EA		1	*	*	*			54	
						COMPRESSION USE UNTIL											
						EXHAUSTED,NO REPLACEMENT											
			5315-812-3759	MS20392-2C11	<96906>	..PIN,SPRING.....		EA		1					*	54	53
P	O		5315-614-0311	59-018-078-0500	<72962>	..PIN,SPRING.....		EA		1	*	*	*		*	54	54
P	O		1560-575-2068	S1625-61017	<78286>	..TERMINAL,BRAKE ROD.....		EA		1	*	2	2		*	54	55
			5315-234-1856	MS24665-155	<96906>	..PIN,COTTER.....		HD		1	*	*	*		*	54	56
			5310-141-1795	AN960-416	<88044>	..WASHER,FLAT.....		HD		1	*	*	*		*	54	57
P	O		1630-663-2923	S1625-61010	<78286>	..SPRING,HELICAL,COMPRESSION.		EA		1	*	*	2		*	54	58
			5310-141-1795	AN960-416	<88044>	..WASHER,FLAT.....		HD		1	*	*	*		*	54	59
MF	F			S1625-61020-1	<78286>	..PLATE-STRIKE.....		EA		1	*	*	*		*	54	60
						MAKEFR											
						AR 9515-184-8815 STEEL SH											
				S1625-61011	<78286>	..VALVE,PARKING BRAKE.....		EA		1						54	
P	O	R	1630-562-5053	591-40-1	<70236>	..VALVE,PARKING BRAKE.....		EA		1	*	*	*		*	54	61
						RPLS-- 1560-593-3882,											
						1630-511-1119											
				591-40-1	<70236>	..VALVE PARKING BRAKE.....		EA		1						54	
						INTRCH PN S1625-61011											

(1) SOURCE, MAINT AND REC CODE (a) SOURCE CODE	(b) MAINT LEVEL	(c) RECV CODE	(2) FEDERAL STOCK NUMBER	REFERENCE NUMBER		(3) DESCRIPTION	MODELS USABLE ON CH-34C	(4) UNIT OF ISSUE	(5) QTY INC IN UNIT PACK	(6) QTY INC IN UNIT	(7) 30-DAY DS GS MAINT ALW (a) 1-20	(b) 21-50	(c) 51-100	(8) 1-YR ALW PER 100 EQUIP CNTGCY	(9) DEPOT MAINT ALW PER 100 EQUIP	(10) ILLUSTRATION (a) FIG NO	(b) ITEM NO
			1630-593-3882	9006	<70236>	..VALVE,PARKING BRAKE..... INTRCH PN S1625-61011 ATTACHING PARTS		EA		1						54	
			5306-559-8139	AN3H45A	<88044>	..BOLT,MACHINE.....		EA		1	*	*	*		*	54	62
			5310-183-4406	AN960PD10	<88044>	..WASHER,FLAT.....		HD		1	*	*	*		*	54	
			5310-167-0753	AN960PD10L	<88044>	..WASHER,FLAT.....		HD		2	*	*	*		*	54	
			5310-877-5797	MS21044N3	<96906>	..NUT,SELF-LOCKING,HEXAGON...		EA		1	*	*	*		*	54	
			5306-559-8140	AN3H44A	<88044>	..BOLT,MACHINE.....		EA		1	*	*	*		*	54	63
			5310-183-4406	AN960PD10	<88044>	..WASHER,FLAT.....		HD		1	*	*	*		*	54	
			5310-167-0753	AN960PD10L	<88044>	..WASHER,FLAT.....		HD		2	*	*	*		*	54	
			5310-877-5797	MS21044N3	<96906>	..NUT,SELF-LOCKING,HEXAGON...		EA		1	*	*	*		*	54	
						---*---											
AF	F			S1625-61015-1	<78286>	..ROD RPLS-- 1560-563-9887..		EA		1						54	64
			5315-663-1298	MS16562-205	<96906>	...PIN,SPRING.....		HD		1	*	*	*		*	54	65
			1560-575-2067	S1625-61016-1	<78286>	...ROD,PARKING BRAKE..... RPL-BY 1560-070-2694										54	
P	F		1560-070-2694	S1625-61016-3	<78286>	...ROD,PARKING BRAKE..... RPLS-- 1560-327-3877, 1560-563-9888,& 1560-575-2067		EA		1	*	*	2		*	54	66
P	F		1560-339-9616	S1525-61034	<78286>	...HANDLE,PARKING BRAKE..... ACTUATING		EA		1	*	*	*		*	54	67
			5306-182-2062	AN3H11A	<88044>	..BOLT,MACHINE.....		HD		4	*	*	*		*	54	68
			5310-167-0818	AN960-10	<88044>	..WASHER,FLAT.....		HD		4	*	*	*		*	54	
			5310-877-5797	MS21044N3	<96906>	..NUT,SELF-LOCKING,HEXAGON...		EA		4	*	*	*		*	54	
P	F		1560-563-9885	S1625-61012-2	<78286>	..CLAMP ASSEMBLY,HALF..... RPLS-- 1560-575-2066		EA		1	*	*	*		*	54	69
P	F		1560-563-9886	S1625-61013	<78286>	..BRACKET ASSEMBLY.....		EA		1	*	*	2		*	54	70
P	F		1560-341-0854	S1525-61026	<78286>	...HOUSING ASSEMBLY,PARKING.. BRAKE HANDLE GEAR ATTACHING PARTS		EA		1	*	*	*		*	54	71
				MS20470AD3	<96906>	...RIVET.....		EA		4						54	
						---*---											
				S1625-61012-1	<78286>	...HALF CLAMP ASSEMBLY,..... HANDLE SUPPORT USE UNTIL EXHAUSTED,NO REPLACEMENT		EA		1	*	*	*			54	73
				S1630-61000-2	<78286>	ENGINE THROTTLE CARBURETOR... AIR AND MIXTURE CONTROLS INSTALLATION USBL EFF 53-4475 THRU 54-3050 SEE FIG.40 FOR NHA										55	
			5340-067-9875	MS21251B3S	<96906>	.TURNBUCKLE BODY.....		EA		4					*	55	1
				S1630-61078	<78286>	.MIXTURE AND SELECTOR VALVE.. CONTROLS PULLEY INSTALLATION SEE FIG.59				1						55	2

(1) SOURCE, MAINT AND REC CODE (a) SOURCE CODE	(b) MAINT LEVEL	(c) REC CODE	(2) FEDERAL STOCK NUMBER	REFERENCE NUMBER	(3) DESCRIPTION	MODELS USABLE ON CH-34C	(4) UNIT OF ISSUE	(5) QTY INC IN UNIT PACK	(6) QTY INC IN UNIT	(7) 30-DAY DS/GS MAINT ALW (a) 1-20	(b) 21-50	(c) 51-100	(8) 1-YR ALW PER 100 EQUIP CNTGCY	(9) DEPOT MAINT ALW PER 100 EQUIP	(10) ILLUSTRATION (a) FIG NO	(b) ITEM NO
			5310-167-0753	AN960PD10L <88044>	.WASHER,FLAT.....		HD		2	*	*	*		*	55	
			5310-807-1467	MS21042-3 <96906>	. NUT,EXTENDED WASHER				1					*	55	
					---*---											
P	F		3110-506-1605	FR3-4 <77896>	..BEARING,ROLLER,ROD END.....		EA		1	*	*	*		REF	55	37
P	O		2995-622-6001	S1630-61156-3 <78286>	..ROD,END.....		EA		1	*	*	*		*	55	37A
P	F		1560-345-6719	S14-30-3122 <78286>	.RETAINER.....		EA		1	*	*	*		REF	55	38
				S1630-61022 <78286>	.THROTTLE SYNCHRONIZER.....				1						55	39
					INSTALLATION USBL EFF											
					53-4475 THRU 54-3050											
					SEE FIG.70 FOR BREAKDOWN											
			5315-234-1856	MS24665-155 <96906>	.PIN,COTTER.....		HD		1	*	*	*		*	55	
			1560-327-3880	S1630-61009 <78286>	.ROD ASSEMBLY,SERVO.....		EA								55	41
					ACTUATING											
			5306-292-8276	AN173H11A <88044>	.BOLT,MACHINE.....		EA		2	*	*	*		*	55	42
			5310-167-0753	AN960PD10L <88044>	.WASHER,FLAT.....		HD		4	*	*	*		*	55	
			5310-807-1467	MS21042-3 <96906>	. NUT,EXTENDED WASHER				2					*	55	
P	F		3110-173-5075	REB3N2 <21335>	..BEARING,BALL,ROD END.....		EA		1	*	*	*		*	55	43
P	F		3110-198-1264	FR3-5 <77896>	..BEARING,ROLLER,ROD END.....		EA		1	*	*	*		*	55	44
				S1630-61092 <78286>	.SERVO ACTUATING TORQUE.....				1						55	45
					TUBE INSTALLATION											
					USBL EFF 53-4475 THRU											
					54-3050 SEE FIG.71 FOR											
					BREAKDOWN											
			5315-234-1856	MS24665-155 <96906>	.PIN,COTTER.....		HD		1	*	*	*		*	55	46
				S1630-61154 <78286>	.ROD ASSEMBLY.....		EA		1						55	
					ATTACHING PARTS											
			5306-292-8276	AN173H11A <88044>	.BOLT,MACHINE.....		EA		1	*	*	*		*	55	
			5310-167-0753	AN960PD10L <88044>	.WASHER,FLAT.....		HD		2	*	*	*		*	55	
			5310-807-1467	MS21042-3 <96906>	. NUT,EXTENDED WASHER				1					*	55	
			5306-550-3405	AN173H10A <88044>	.BOLT,MACHINE.....		EA		1	*	*	*		*	55	
			5310-167-0753	AN960PD10L <88044>	.WASHER,FLAT.....		HD		2	*	*	*		*	55	
			5310-807-1467	MS21042-3 <96906>	. NUT,EXTENDED WASHER				1					*	55	
					---*---											
P	F		1560-336-7955	S1630-61130 <78286>	..ROD ASSEMBLY,THROTTLE.....		EA		1	*	*	*		*	55	50
					CONTROL											
P	F		1560-570-4871	S1630-61130-1 <78286>	...TUBE ASSEMBLY,THROTTLE....		EA		1	*	*	*		*	55	51
					CONTROL											
					ATTACHING PARTS											
			5306-550-3405	AN173H10A <88044>	...BOLT,MACHINE.....		EA		2	*	*	*		*	55	52
			5310-167-0753	AN960PD10L <88044>	...WASHER,FLAT.....		HD		4	*	*	*		*	55	
			5310-807-1467	MS21042-3 <96906>	...NUT,EXTENDED WASHER ..				2					*	55	
					---*---											
P	F		3110-173-5075	REB3N2 <21335>	....BEARING,BALL,ROD END.....		EA		1	*	*	*		REF	55	53
X1				S1630-61130-2 <78286>	...THROTTLE CONTROLS ROD.....		EA		1						55	54
					ASSEMBLY PLUG											
P	F		1560-570-0641	S1630-61154-1 <78286>	..TUBE ASSEMBLY,THROTTLE.....		EA		1	*	*	*		*	55	55
					CONTROL											
			5310-316-8956	AN316-4R <88044>	...NUT,PLAIN,HEXAGON.....		HD		1	*	*	*		*	55	56
P	F		3110-159-1632	RA3M4-2 <51663>	...BEARING,BALL,ROD END.....		EA		1	*	*	*		*	55	57
			1560-567-5215	S1630-61153-3 <78286>	.SEAL ASSEMBLY-PUSH PULL.....										55	
					ROD FIRE RPL-BY											
					1560-632-4546											

(1) SOURCE, MAINT AND REC CODE (a) SOURCE CODE	(b) MAINT LEVEL	(c) REC CODE	(2) FEDERAL STOCK NUMBER	REFERENCE NUMBER		(3) DESCRIPTION	MODELS USABLE ON CH-34C	(4) UNIT OF ISSUE	(5) QTY INC IN UNIT PACK	(6) QTY INC IN UNIT	(7) 30-DAY DS/GS MAINT ALW (a) 1-20	(b) 21-50	(c) 51-100	(8) 1-YR ALW PER 100 EQUIP CNTGCY	(9) DEPOT MAINT ALW PER 100 EQUIP	(10) ILLUSTRATION (a) FIG NO	(b) ITEM NO
P	F		1560-632-4546	S1630-61153-6	<78286>	.FIRE SEAL ASSEMBLY RPLS--.. 1560-567-5215		EA		1	*	*	*		*	55	58
				S1630-61016	<78286>	.MOUNT ASSEMBLY-THROTTLE..... SYNCHRONIZER ACTUATING TORQUE TUBE ATTACHING PARTS		EA		1						55	
			5306-182-2057	AN3H4A	<88044>	.BOLT,MACHINE.....		HD		4	*	*	*		*	55	
			5310-167-0753	AN960PD10L	<88044>	.WASHER,FLAT.....		HD		4	*	*	*		*	55	
						---*---											
			5310-877-5796	MS21044N4	<96906>	..NUT,SELF-LOCKING,HEXAGON...		EA		2	*	*	*		*	55	61
			5310-167-0753	AN960PD10L	<88044>	..WASHER,FLAT.....		HD		2	*	*	*		*	55	62
				S1630-61019-1	<78286>	..SUPPORT ASSEMBLY.....		EA		2						55	
			3110-143-3034	541-00429-0504	<96906>	...BEARING,BALL,BELLCRANK.... RPL-BY 3110-198-1010										55	
P	F		3110-198-1010	MS20218-1	<96906>	...BEARING,BALL,BELLCRANK.... RPLS-- 3110-143-3034 ATTACHING PARTS		EA		1	*	*	*		*	55	64
				MS20470AD4	<96906>	...RIVET.....		EA		6						55	65
						---*---											
			1560-327-3881	S1630-61011	<78286>	..LEVER,TORQUE TUBE RPL-BY.. 1560-330-6171										55	
P	F		1560-330-6171	S1630-61197	<78286>	..LEVER,TORQUE TUBE RPLS--.. 1560-327-3881 ATTACHING PARTS		EA		1	*	*	*		*	55	66
			5315-298-1035	AN386-2-7A	<88044>	..PIN,TAPERED,THREADED.....		EA		1	*	*	*		*	55	67
			5310-167-0685	AN975-3	<88044>	..WASHER,RECESSED.....		HD		1	*	*	*		*	55	
			5310-807-1467	MS21042-3	<96906>	.. NUT,EXTENDED WASHER ...				1					*	55	
						---*---											
P	F		1560-330-6170	S1630-61196	<78286>	..LEVER,THROTTLE CONTROL..... ATTACHING PARTS		EA		1	*	*	*		*	55	68
			5315-298-1035	AN386-2-7A	<88044>	..PIN,TAPERED,THREADED.....		EA		1	*	*	*		*	55	69
			5310-167-0685	AN975-3	<88044>	..WASHER,RECESSED.....		HD		1	*	*	*		*	55	
			5310-807-1467	MS21042-3	<96906>	.. NUT,EXTENDED WASHER ...				1					*	55	
						---*---											
			1560-327-3878	S1630-61007	<78286>	.ROD ASSEMBLY RPL-BY..... 1560-633-4391										55	
			1560-563-9891	S1630-61007-2	<78286>	.ROD ASSEMBLY,SERVO RPL-BY.. 1560-633-4391										55	
P	F		1560-633-4391	S1630-61007-4	<78286>	.ROD ASSEMBLY-THROTTLE..... SYNCHRONIZER CAM RPLS-- 1560-327-3878, 1560-563-9891 ATTACHING PARTS		EA		1	*	*	*		*	55	71
			5306-550-3405	AN173H10A	<88044>	.BOLT,MACHINE.....		EA		1	*	*	*		*	55	72
			5310-167-0753	AN960PD10L	<88044>	.WASHER,FLAT.....		HD		2	*	*	*		*	55	
			5310-807-1467	MS21042-3	<96906>	. NUT,EXTENDED WASHER				1					*	55	
			5306-292-8276	AN173H11A	<88044>	.BOLT,MACHINE.....		EA		1	*	*	*		*	55	73
			5310-167-0753	AN960PD10L	<88044>	.WASHER,FLAT.....		HD		2	*	*	*		*	55	
			5310-807-1467	MS21042-3	<96906>	. NUT,EXTENDED WASHER				1					*	55	
						---*---											
P	F		3110-173-5075	RE83N2	<21335>	..BEARING,BALL,ROD END.....		EA		1	*	*	*		REF	55	74
			1560-327-2879	S1630-61002	[illegible]	[illegible] CRANK ASSEMBLY RPL-BY [illegible]										55	

(1) SOURCE, MAINT AND REC CODE (a) SOURCE CODE	(b) MAINT LEVEL	(c) REC CODE	(2) FEDERAL STOCK NUMBER	(3) DESCRIPTION REFERENCE NUMBER			MODELS USABLE ON CH-34C	(4) UNIT OF ISSUE	(5) QTY INC IN UNIT PACK	(6) QTY INC IN UNIT	(7) 30-DAYS GS MAINT ALW (a) 1-20	(b) 21-50	(c) 51-100	(8) 1YR ALW PER 100 EQUIP CNTGCY	(9) DEPOT MAINT ALW PER 100 EQUIP	(10) ILLUSTRATION (a) FIG NO	(b) ITEM NO
						CONTINUED										55	
						1560-330-6172											
P	F		1560-330-6172	S1630-61198	<78286>	.BELL CRANK ASSEMBLY,SERVO...		EA		1	*	*	2		*	55	75
						ACTUATING RPLS--											
						1560-327-3879											
						ATTACHING PARTS											
			5306-156-2542	AN174H17A	<88044>	.BOLT,MACHINE.....		HD		1	*	*	*		*	55	76
			5310-187-2354	AN960PD416	<88044>	.WASHER,FLAT.....		HD		2	*	*	*		*	55	
			5310-543-4443	MS20364-428A	<96906>	.NUT,SELF-LOCKING,HEXAGON....		HD		1	*	*	*		*	55	
						---*---											
P	F		3110-926-4655	DW4K	<21335>	..BEARING,BALL,AIRFRAME.....		EA		1	2	3	6	72	*	55	77
			5315-234-1856	MS24665-155	<96906>	.PIN,COTTER.....		HD		1	*	*	*		*	55	78
			1560-334-6355	S1630-61131-1	<78286>	.ROD ASSEMBLY,THROTTLE.....		EA								55	79
						CONTROL											
						ATTACHING PARTS											
			5306-550-3405	AN173H10A	<88044>	.BOLT,MACHINE.....		EA		1	*	*	*		*	55	80
			5310-167-0753	AN960PD10L	<88044>	.WASHER,FLAT.....		HD		2	*	*	*		*	55	
			5310-807-1467	MS21042-3	<96906>	.NUT.EXTENDED WASHER ...				1					*	55	
			5306-156-2542	AN174H17A	<88044>	.BOLT,MACHINE.....		HD		1	*	*	*		*	55	81
			5310-187-2354	AN960PD416	<88044>	.WASHER,FLAT.....		HD		2	*	*	*		*	55	
			5310-543-4443	MS20364-428A	<96906>	.NUT,SELF-LOCKING,HEXAGON....		HD		1	*	*	*		*	55	
						---*---											
P	F		3110-173-5075	REB3N2	<21335>	..BEARING,BALL,ROD END.....		EA		1	*	*	*		REF	55	82
P	F		3110-173-5077	RE4F5	<21335>	..BEARING,BALL,ROD END.....		EA		1	*	*	*		*	55	83
			5315-234-1856	MS24665-155	<96906>	.PIN,COTTER.....		HD		1	*	*	*		*	55	84
			5306-550-3405	AN173H10A	<88044>	.BOLT,MACHINE.....		EA		2	*	*	*		*	55	86
			5310-167-0753	AN960PD10L	<88044>	.WASHER,FLAT.....		HD		4	*	*	*		*	55	
			5310-807-1467	MS21042-3	<96906>	.NUT. EXTENDED WASHER				2					*	55	
P	F		3110-173-5075	REB3N2	<21335>	..BEARING,BALL,ROD END.....		EA		2	*	*	*		REF	55	87
				S1630-61127	<78286>	.BELLCRANK INSTALLATION.....				1						55	
						THROTTLE CONTROL											
				S1630-61127-1	<78286>	..BELLCRANK ASSEMBLY.....		EA		1						55	88
						ATTACHING PARTS											
			5306-150-9928	AN23-46A	<88044>	..BOLT,CLEVIS.....		EA		2	*	*	*		*	55	89
			5310-167-0753	AN960PD10L	<88044>	..WASHER,FLAT.....		HD		4	*	*	*		*	55	
			5310-807-1467	MS21042-3	<96906>	..NUT.EXTENDED WASHER ...				2					*	55	
						---*---											
P	F		2995-327-3895	S1630-61126	<78286>	...BELLCRANK ASSEMBLY,.....		EA		1	*	*	*		*	55	90
						THROTTLE CONTROLS											
						ATTACHING PARTS											
			5306-550-3408	AN174H13A	<88044>	...BOLT,MACHINE.....		HD		1	*	*	*		*	55	91
			5310-184-9001	AN960PD416L	<88044>	...WASHER,FLAT.....		HD		4	*	*	*		*	55	
			5310-543-4443	MS20364-428A	<96906>	...NUT,SELF-LOCKING,HEXAGON..		HD		1	*	*	*		*	55	
						---*---											
			5306-156-2472	AN173H20A	<88044>	...BOLT,MACHINE.....		EA		1	*	*	*		*	55	92
			5310-167-0753	AN960PD10L	<88044>	...WASHER,FLAT.....		HD		2	*	*	*		*	55	
			5310-807-1467	MS21042-3	<96906>	...NUT. EXTENDED WASHER ..				1					*	55	
			1560-334-6353	S1630-61129-3	<78286>	...LEVER,THROTTLE CONTROLS...				1						55	
P	F		1560-334-6352	S1630-61129-2	<78286>	...LEVER,THROTTLE CONTROLS...		EA		1	*	*	*		*	55	93
P	F		2995-327-3896	S1630-61128	<78286>	...BLOCK ASSEMBLY,THROTTLE...		EA		1	*	*	*		*	55	95
						CONTROLS											
P	F		3110-142-4453	AN200KP3	<88044>	....BEARING,BALL,AIRFRAME....		EA		1	*	*	*		*	55	96

(1) SOURCE, MAINT AND REC CODE (a) SOURCE CODE	(b) MAINT LEVEL	(c) REC CODE	(2) FEDERAL STOCK NUMBER	REFERENCE NUMBER		(3) DESCRIPTION	MODELS USABLE ON CH-34C	(4) UNIT OF ISSUE	(5) QTY INC IN UNIT PACK	(6) QTY INC IN UNIT	(7) 30-DAY DS/GS MAINT ALW (a) 1-20	(b) 21-50	(c) 51-100	(8) 1-YR ALW PER 100 EQUIP CNTGCY	(9) DEPOT MAINT ALW PER 100 EQUIP	(10) ILLUSTRATION (a) FIG NO	(b) ITEM NO
P	F		1560-792-6392	SS4055-3-81	<78286>	....SPACER,SLEEVE.....		EA		1	*	*	*		*	55	97
P	F		3110-142-4453	AN200KP3	<88044>	....BEARING,BALL,AIRFRAME....		EA		1	*	*	*		REF	55	98
				S1630-61120	<78286>	.THROTTLE CONTROL TORQUE..... TUBE INSTALLATION USBL EFF 53-4475 THRU 54-3050 SEE FIG.72 FOR BREAKDOWN				1						55	99
				S1630-61134	<78286>	.SWITCH INSTALLATION-LIMIT...				1						55	
P	F		5930-503-3843	BZE7RQ2TN	<91929>	..SWITCH,MICRO..... ATTACHING PARTS		EA		1	*	*	*		*	55	100
			5305-151-0837	AN526-632 40	<88044>	..SCREW,MACHINE.....		EA		2					*	55	101
			5310-187-2398	AN960PD6L	<88044>	..WASHER,FLAT.....		HD		4	*	*	*		*	55	
			5310-905-8451	MS21083N06	<96906>	..NUT,SELF-LOCKING,HEXAGON... ---*---		HD		2	*	*	*		*	55	
				S1630-61650	<78286>	.FUEL SELECTOR VALVE..... CONTROL INSTALLATION SEE FIG.57 FOR BREAKDOWN				1						55	102
				S1630-61600-5	<78286>	ENGINE THROTTLE CARBURETOR... AIR AND MIXTURE CONTROLS INSTALLATION USBL EFF 55-4462 AND SUBSEQUENT SEE FIG.40 FOR NHA										56	
			5340-067-9875	MS21251B3S	<96906>	.TURNBUCKLE BODY.....		EA		4					*	56	1
				S1630-61646	<78286>	.MIXTURE AND SELECTOR VALVE.. CONTROLS PULLEY INSTALLATION USBL EFF 55-4462 & SUBSEQUENT SEE FIG.60 FOR BREAKDOWN				1						56	2
		R	2995-613-9688	5L2820-5	<82833>	.QUADRANT RPL-BY..... 2995-573-3982										56	
P	F		2995-573-3982	50104-3	<80477>	.QUADRANT,ENGINE CONTROL..... RPLS-- 2995-613-9688 ATTACHING PARTS		EA		1	*	2	2		*	56	3
			5306-182-2058	AN3H5A	<88044>	.BOLT,MACHINE.....		EA		8	*	*	*		*	56	4
			5310-183-4406	AN960PD10	<88044>	.WASHER,FLAT..... ---*---		HD		8	*	*	*		*	56	
P	C		5355-913-2352	MS26519	<96906>	..KNOB.....		EA		1	*	*	*		*	56	
P	C		5355-913-2353	MS26524-2	<96906>	..KNOB.....		EA		1	*	*	*		*	56	
			5305-180-0014	AN525-10R12	<88044>	.SCREW,MACHINE.....		HD		2	*	*	*		*	56	5
			5310-183-4406	AN960PD10	<88044>	.WASHER,FLAT.....		HD		4	*	*	*		*	56	
			5310-877-5797	MS21044N3	<96906>	.NUT,SELF-LOCKING,HEXAGON....		EA		2	*	*	*		*	56	
MF	F			S1630-61637-1	<78286>	.FAIRLEAD..... MAKEFR AR 9330-290-3461 PLASTIC SH		EA		1						56	6
MF	F			S1630-61637-2	<78286>	.FAIRLEAD..... MAKEFR AR 9330-290-3461 PLASTIC SH		EA		1						56	7

(1) SOURCE, MAINT AND REC CODE (a) SOURCE CODE	(b) MAINT LEVEL	(c) REC LEVEL CODE	(2) FEDERAL STOCK NUMBER	REFERENCE NUMBER	(3) DESCRIPTION	MODELS USABLE ON CH-34C	(4) UNIT OF ISSUE	(5) QTY INC IN UNIT PACK	(6) QTY INC IN UNIT	(7) 30-DAY DS GS MAINT ALW (a) 1-20	(b) 21-50	(c) 51-100	(8) 1-YR ALW PER 100 EQUIP CNTGCY	(9) DEPOT MAINT ALW PER 100 EQUIP	(10) ILLUSTRATION (a) FIG NO	(b) ITEM NO
P	F		5330-599-7708	95 <75165>	.ASBESTOS SHEET,WOVEN.....		IN		1	*	*	*		*	56	8
				S1630-61644-1 <78286>	.FAIRLEAD INSTALLATION.....				1						56	
			5305-180-0012	AN525-10R10 <88044>	..SCREW,MACHINE.....		HD		2	*	*	*		*	56	9
			5310-167-0753	AN960PD10L <88044>	..WASHER,FLAT.....		HD		4	*	*	*		*	56	
			5310-807-1467	MS21042-3 <96906>	..NUT,EXTENDED WASHER ...				2					*	56	
				S1630-61644-8 <78286>	..FAIRLEAD.....		EA		1						56	10
					MAKEFR											
					AR 9330-576-3980 PLASTIC SH											
				S1630-61644-9 <78286>	..FAIRLEAD.....		EA		1						56	11
					MAKEFR											
					AR 9330-576-3980 PLASTIC SH											
			5305-180-0012	AN525-10R10 <88044>	..SCREW,MACHINE.....		HD		2	*	*	*		*	56	12
			5310-167-0753	AN960PD10L <88044>	..WASHER,FLAT.....		HD		4	*	*	*		*	56	
			5310-807-1467	MS21042-3 <96906>	..NUT,SELF-LOCKING,HEXAGON...				2					*	56	
MF	F			S1630-61644-4 <78286>	.FAIRLEAD ENGINE CONTROLL....		EA		1						56	
					MAKEFR											
					AR 9330-576-3980 PLASTIC SH											
MF	F			S1630-61644-5 <78286>	..FAIRLEAD.....		EA		1						56	13
					MAKEFR											
					AR 9330-576-3980 PLASTIC SH											
MF	F			S1630-61644-6 <78286>	..FAIRLEAD.....		EA		1						56	14
					MAKEFR											
					AR 9330-576-3980 PLASTIC SH											
MF	F			S1630-61644-10 <78286>	..FAIRLEAD-RIVETED.....		EA		1						56	15
					MAKEFR											
					AR 9330-576-3980 PLASTIC SH											
			5305-180-0012	AN525-10R10 <88044>	..SCREW,MACHINE.....		HD		2	*	*	*		*	56	16
			5310-167-0753	AN960PD10L <88044>	..WASHER,FLAT.....		HD		4	*	*	*		*	56	
			5310-807-1467	MS21042-3 <96906>	..NUT,SELF-LOCKING,HEXAGON...				2					*	56	
				S1630-61644-7 <78286>	..FAIRLEAD.....		EA		1						56	17
					MAKEFR											
					AR 9330-576-3980 PLASTIC SH											
			1560-560-5379	S1630-61631-5 <78286>	.CABLE ASSEMBLY RPL-BY.....										56	
					4010-882-1646											
P	F		4010-882-1646	NAS303-67-0364 <80205>	.WIRE ROPE ASSEMBLY RPLS--..		EA		1	*	*	*		*	56	18
					1560-560-5379											
			1560-560-5380	S1630-61631-7 <78286>	.CABLE ASSEMBLY RPL-BY.....										56	
					1560-866-6082											
P	F		1560-866-6082	S1630-61631-69 <78286>	.CABLE ASSEMBLY,POWER PLANT..		EA		1	2	2	4		*	56	19
					CONTROLS RPLS--											
					1560-560-5380											
			5340-067-9875	MS21251B38 <96906>	.TURNBUCKLE BODY.....		EA		1					*	56	20
			1560-560-5376	S1630-61631-21 <78286>	.CABLE ASSEMBLY RPL-BY.....										56	
					1560-867-1140											
P	F		1560-867-1140	S1630-61631-81 <78286>	.CABLE ASSEMBLY,WIRE RPLS--.		EA		1	*	2	2		*	56	21
					1560-560-5376											
				S1630-61600-2 <78286>	.BRACKET ASSEMBLY.....		EA		1						56	
					ATTACHING PARTS											
			5306-182-2059	AN3H6A <88044>	.BOLT,MACHINE.....		HD		3	*	*	*		*	56	
			5310-167-0753	AN960PD10L <88044>	.WASHER,FLAT.....		HD		6	*	*	*		*	56	
			5310-877-5798	MS21044D3 <96906>	.NUT,SELF-LOCKING,HEXAGON....		EA		3	*	*	*		*	56	

---*---

(1) SOURCE, MAINT AND REC CODE (a) SOURCE CODE	(b) MAINT LEVEL	(c) REC CODE	(2) FEDERAL STOCK NUMBER	REFERENCE NUMBER	(3) DESCRIPTION	MODELS USABLE ON CH-34C	(4) UNIT OF ISSUE	(5) QTY INC IN UNIT PACK	(6) QTY INC IN UNIT	(7) 30-DAY DS/GS MAINT ALW (a) 1-20	(b) 21-50	(c) 51-100	(8) 1-YR ALW PER 100 EQUIP CNTGCY	(9) DEPOT MAINT ALW PER 100 EQUIP	(10) ILLUSTRATION (a) FIG NO	(b) ITEM NO
			5315-598-3035	NAS427W19 <80205>	..PIN,STRAIGHT,HEADLESS.....		EA		2	*	*	*		*	56	23
			5315-234-1856	MS24665-155 <96906>	..PIN,COTTER.....		HD		2	*	*	*		*	56	
			3020-288-3411	MS20219A2 <96906>	..PULLEY,GROOVED.....		EA		2	*	*	*		*	56	24
					ATTACHING PARTS											
				NAS464-4-25 <80205>	..BOLT,MACHINE.....		EA		1						56	
			5310-187-2354	AN960PD416 <88044>	..WASHER,FLAT.....		HD		4	*	*	*		*	56	
			5310-543-4443	MS20364-428A <96906>	..NUT,SELF-LOCKING,HEXAGON...		HD		1	*	*	*		*	56	
					---*---											
P	F		1560-560-5369	S1630-61629 <78286>	..BRACKET-PULLEY.....		EA		1	*	*	*		*	56	26
			5315-141-6356	NAS427K40 <80205>	.PIN,SPRING.....		EA		1	*	*	*		*	56	27
			5315-597-1519	NAS427T21 <80205>	.PIN,SPRING.....		EA		2	*	*	*		*	56	28
			5340-698-3435	NAS43DD3-20 <80205>	.SPACER,SLEEVE.....		EA		2	*	*	*		*	56	
			5315-597-1600	NAS427K22 <80205>	.PIN,SPRING.....		EA		1	*	*	*		*	56	29
			5306-558-9467	AN4H32A <88044>	.BOLT,MACHINE.....		EA		1	*	*	*		*	56	30
			5310-187-2354	AN960PD416 <88044>	.WASHER,FLAT.....		HD		3	*	*	*		*	56	
			5310-543-4443	MS20364-428A <96906>	.NUT,SELF-LOCKING,HEXAGON....		HD		1	*	*	*		*	56	
			3020-277-1119	MS20219-4 <96906>	.PULLEY,GROOVED.....		EA		2	*	*	*		*	56	31
			3020-288-3411	MS20219A2 <96906>	.PULLEY,GROOVED.....		EA		2	*	*	*		*	56	32
				NAS43DD4-22 <80205>	.SPACER,SLEEVE.....		EA		2						56	
MF	F			S1630-61630-2 <78286>	.CLIP SUPPORT.....		EA		1						56	34
					MAKEFR											
					AR 9535-232-0378 AL ALLY SH											
MF	F			S1630-61630-3 <78286>	.SUPPORT.....		EA		1						56	35
					MAKEFR											
					AR 9535-232-0378 AL ALLY SH											
					ATTACHING PARTS											
			5306-182-2057	AN3H4A <88044>	.BOLT,MACHINE.....		HD		2	*	*	*		*	56	36
			5310-167-0753	AN960PD10L <88044>	.WASHER,FLAT.....		HD		2	*	*	*		*	56	
			5310-183-4406	AN960PD10 <88044>	.WASHER,FLAT.....		HD		2	*	*	*		*	56	
			5310-807-1467	MS21042-3 <96906>	.NUT, EXTENDED WASHER ...				2					*	56	
					---*---											
MF	F			S1630-61630-1 <78286>	.SUPPORT.....		EA		1						56	37
					MAKEFR											
					AR 9535-232-0378 AL ALLY SH											
					ATTACHING PARTS											
			5306-182-2057	AN3H4A <88044>	.BOLT,MACHINE.....		HD		2	*	*	*		*	56	38
			5310-167-0753	AN960PD10L <88044>	.WASHER,FLAT.....		HD		2	*	*	*		*	56	
			5310-183-4406	AN960PD10 <88044>	.WASHER,FLAT.....		HD		2	*	*	*		*	56	
			5310-807-1467	MS21042-3 <96906>	.NUT,EXTENDED WASHER				2					*	56	
					---*---											
			1560-560-5381	S1630-61631-9 <78286>	.CABLE ASSEMBLY RPL-BY.....										56	
					1560-866-6083											
P	F		1560-866-6083	S1630-61631-71 <78286>	.CABLE ASSEMBLY RPLS--.....		EA		1	2	2	5		*	56	39
					1560-560-5381											
P	F		2995-560-5382	S1630-61633 <78286>	.PULLEY ASSEMBLY.....		EA		1	*	*	*		*	56	40
					ATTACHING PARTS											
			5306-182-1966	AN4H20A <88044>	.BOLT,MACHINE.....		HD		1	*	*	*		*	56	41
			5310-187-2354	AN960PD416 <88044>	.WASHER,FLAT.....		HD		4	*	*	*		*	56	
			5310-543-4443	MS20364-428A <96906>	.NUT,SELF-LOCKING,HEXAGON....		HD		1	*	*	*		*	56	
					---*---											
			3020-288-3411	MS20219A2 <96906>	.PULLEY,GROOVED.....		EA		1	*	*	*		*	56	42
					ATTACHING PARTS											

(1) SOURCE, MAINT AND REC CODE (a) SOURCE CODE	(b) MAINT LEVEL	(c) REC CODE	(2) FEDERAL STOCK NUMBER	(3) DESCRIPTION REFERENCE NUMBER			MODELS USABLE ON CH-34C	(4) UNIT OF ISSUE	(5) QTY INC IN UNIT PACK	(6) QTY INC IN UNIT	(7) 30-DAY DS GS MAINT ALW (a) 1-20	(b) 21-50	(c) 51-100	(8) 1-YR ALW PER 100 EQUIP CNTGCY	(9) DEPOT MAINT ALW PER 100 EQUIP	(10) ILLUSTRATION (a) FIG NO	(b) ITEM NO
			5306-182-1966	AN4H20A	<88044>	.BOLT,MACHINE.....		HD		1	*	*	*		*	56	43
			5310-187-2354	AN960PD416	<88044>	.WASHER,FLAT.....		HD		2	*	*	*		*	56	
			5310-543-4443	MS20364-428A	<96906>	.NUT,SELF-LOCKING,HEXAGON....		HD		1	*	*	*		*	56	
						---*---											
				NAS43DD4-16	<80205>	.SPACER,SLEEVE.....		EA		1						56	44
				NAS43DD4-37	<80205>	.SPACER,SLEEVE.....		EA		1						56	
X2	F			S1630-61642	<78286>	.CLIP ASSEMBLY.....		EA		1						56	46
MF	F			S1630-61632-1	<78286>	.BRACKET.....		EA		1						56	47
						MAKEFR											
						AR 9535-232-0378 AL ALLY SH											
						ATTACHING PARTS											
			5306-182-2057	AN3H4A	<88044>	.BOLT,MACHINE.....		HD		1	*	*	*		*	56	48
			5310-167-0753	AN960PD10L	<88044>	.WASHER,FLAT.....		HD		2	*	*	*		*	56	
			5310-807-1467	MS21042-3	<96906>	.NUT,SELF-LOCKING,HEXAGON....				1					*	56	
						---*---											
MF	F			S1630-61632-2	<78286>	.BRACKET.....		EA		1						56	49
						MAKEFR											
						AR 9535-232-0378 AL ALLY SH											
						ATTACHING PARTS											
			5306-182-2057	AN3H4A	<88044>	.BOLT,MACHINE.....		HD		1	*	*	*		*	56	50
			5310-167-0753	AN960PD10L	<88044>	.WASHER,FLAT.....		HD		2	*	*	*		*	56	
			5310-807-1467	MS21042-3	<96906>	.NUT,SELF-LOCKING,HEXAGON....				1					*	56	
						---*---											
			5315-234-1856	MS24665-155	<96906>	.PIN,COTTER.....		HD		1	*	*	*		*	56	51
P	F		2915-560-5383	S1630-61634	<78286>	.GUARD,CARBURETOR AIR.....		EA		1	*	*	*		*	56	52
			5310-183-4406	AN960PD10	<88044>	.WASHER,FLAT.....		HD		2	*	*	*		*	56	53
P	F		1560-591-6716	S1630-61647	<78286>	.SLEEVE.....		EA		4	*	2	2		*	56	54
P	O		1560-674-5490	S1630-80821-1	<78286>	.GUIDE,ENGINE.....		EA		4	2	5	10		*	56	55
			5340-067-9875	MS21251B3S	<96906>	.TURNBUCKLE BODY.....		EA		1					*	56	56
			1560-560-5372	S1630-61631-13	<78286>	.CABLE ASSEMBLY RPL-BY.....										56	
						1560-868-6963											
P	F		1560-868-6963	S1630-61631-73	<78286>	.CABLE ASSEMBLY,POWER PLANT..		EA		1	2	2	4		*	56	57
						CONTROLS RPLS--											
						1560-560-5372											
			1560-560-5374	S1630-61631-17	<78286>	.CABLE ASSEMBLY.....										56	
						RPL-BY 1560-918-3063											
P	F		1560-918-3063	S1630-61631-77	<78286>	.CABLE ASSEMBLY,POWER.....		EA		1	2	2	4		*	56	58
						RPLS-- 1560-560-5374											
P	F		4030-303-6359	D6-1001-3-2A	<45402>	.COUPLING,WIRE ROPE,QUICK....		EA		1	*	2	2	12	*	56	59
						DISCONNECT											
			1560-560-5373	S1630-61631-15	<78286>	.CABLE ASSEMBLY,POWER PLANT..										56	
						CONTROLS RPL-BY											
						1560-868-6964											
P	F		1560-868-6964	S1630-61631-75	<78286>	.CABLE ASSEMBLY,POWER PLANT..		EA		1	*	2	2		*	56	60
						CONTROLS RPLS--											
						1560-560-5373											
			1560-560-5375	S1630-61631-19	<78286>	.CABLE ASSEMBLY,POWER PLANT..										56	
						CONTROLS RPL-BY											
						1560-918-3062											
P	F		1560-918-3062	S1630-61631-79	<78286>	.CABLE ASSEMBLY,POWER.....		EA		1	2	3	5		*	56	61
						RPLS-- 1560-560-5375											
AF	F			S1630-61627	<78286>	.BRACKET ASSEMBLY.....		EA		1						56	62

(1) SOURCE, MAINT AND REC CODE (a) SOURCE CODE	(b) MAINT LEVEL	(c) RECOVERY CODE	(2) FEDERAL STOCK NUMBER	REFERENCE NUMBER	(3) DESCRIPTION	MODELS USABLE ON CH-34C	(4) UNIT OF ISSUE	(5) QTY INC IN UNIT PACK	(6) QTY INC IN UNIT	(7) 30-DAY DS GS MAINT ALW (a) 1-20	(b) 21-50	(c) 51-100	(8) 1-YR ALWPER 100 EQUIP CNTGCY	(9) DEPOT MAINT ALWPER 100 EQUIP	(10) ILLUSTRATION (a) FIG NO	(b) ITEM NO
					CONTINUED										56	62
					ATTACHING PARTS											
			5306-182-2057	AN3H4A <88044>	.BOLT,MACHINE.....		HD		2	*	*	*		*	56	63
			5310-167-0753	AN960PD10L <88044>	.WASHER,FLAT.....		HD		2	*	*	*		*	56	64
			5310-208-4997	1452-048 <72962>	.NUT,SELF-LOCKING,BARREL.....		EA		2	*	*	*			56	65
					---*---											
			3020-277-1119	MS20219-4 <96906>	..PULLEY,GROOVED.....		EA		1	*	*	*		*	56	67
					ATTACHING PARTS											
			5306-182-1959	AN4H11A <88044>	..BOLT,MACHINE.....		HD		1	*	*	*		*	56	68
			5310-184-9001	AN960PD416L <88044>	..WASHER,FLAT.....		HD		8	*	*	*		*	56	
			5310-543-4443	MS20364-428A <96906>	..NUT,SELF-LOCKING,HEXAGON...		HD		1	*	*	*		*	56	
					---*---											
MF	F			S1630-61628 <78286>	..BRACKET.....		EA		1						56	69
					MAKEFR											
					AR 9535-232-0378 AL ALLY SH											
			5306-156-2703	AN24-19 <88044>	.BOLT,CLEVIS.....		EA		1					*	56	70
			5310-184-9001	AN960PD416L <88044>	.WASHER,FLAT.....		HD		1	*	*	*		*	56	71
P	F		5330-527-9778	S1630-61611 <78286>	.WASHER.....		EA		2	2	4	8		*	56	72
			5310-543-4443	MS20364-428A <96906>	.NUT,SELF-LOCKING,HEXAGON....		HD		1	*	*	*		*	56	73
P	F		3110-142-4456	AN201KP4A <88044>	.BEARING,BALL,AIRFRAME.....		EA		1	*	*	*		*	56	74
P	F		1560-622-6293	S1630-61640 <78286>	.ARM ASSEMBLY-THROTTLE.....		EA		1	*	*	*		*	56	75
					CONTROL SEE FIG.65 FOR											
					BREAKDOWN											
					ATTACHING PARTS											
			5310-149-9116	MS20002C8 <96906>	.WASHER,RECESSED.....		LL		1	*	*	*		*	56	76
			5310-167-0823	AN960-816 <88044>	.WASHER,FLAT.....		HD		1	*	*	*		*	56	
			5310-282-7848	MS20365D820A <96906>	.NUT,SELF-LOCKING,HEXAGON....		EA		1	*	*	*		*	56	
					---*---											
P	F		2995-560-5364	S1630-61617 <78286>	.SUPPORT,THROTTLE CONTROL....		EA		1	*	*	*		*	56	77
					ATTACHING PARTS											
			5306-182-2058	AN3H5A <88044>	.BOLT,MACHINE.....		EA		1	*	*	*		*	56	78
			5310-183-4406	AN960PD10 <88044>	.WASHER,FLAT.....		HD		2	*	*	*		*	56	
			5310-877-5797	MS21044N3 <96906>	.NUT,SELF-LOCKING,HEXAGON....		EA		1	*	*	*		*	56	
			5306-182-2058	AN3H5A <88044>	.BOLT,MACHINE.....		EA		2	*	*	*		*	56	79
			5310-167-0753	AN960PD10L <88044>	.WASHER,FLAT.....		HD		4	*	*	*		*	56	
			5310-877-5797	MS21044N3 <96906>	.NUT,SELF-LOCKING,HEXAGON....		EA		2	*	*	*		*	56	
					---*---											
AF	F			S1630-61625 <78286>	.BRACKET ASSEMBLY-THROTTLE...		EA		1						56	80
					CONTROL PULLEY SEE FIG.66											
					FOR BREAKDOWN											
					ATTACHING PARTS											
			5306-182-2058	AN3H5A <88044>	.BOLT,MACHINE.....		EA		2	*	*	*		*	56	81
			5310-167-0753	AN960PD10L <88044>	.WASHER,FLAT.....		HD		4	*	*	*		*	56	
			5310-877-5797	MS21044N3 <96906>	.NUT,SELF-LOCKING,HEXAGON....		EA		2	*	*	*		*	56	
			5306-182-2058	AN3H5A <88044>	.BOLT,MACHINE.....		EA		3	*	*	*		*	56	82
			5310-183-4406	AN960PD10 <88044>	.WASHER,FLAT.....		HD		6	*	*	*		*	56	
			5310-877-5797	MS21044N3 <96906>	.NUT,SELF-LOCKING,HEXAGON....		EA		3	*	*	*		*	56	
			5306-182-2057	AN3H4A <88044>	.BOLT,MACHINE.....		HD		2	*	*	*		*	56	83
			5310-167-0753	AN960PD10L <88044>	.WASHER,FLAT.....		HD		4	*	*	*		*	56	
			5310-877-5797	MS21044N3 <96906>	.NUT,SELF-LOCKING,HEXAGON....		EA		2	*	*	*		*	56	
					---*---											
				S1630-61648 <78286>	.SHIM.....		EA		1						56	

(1) SOURCE, MAINT AND REC CODE (a) SOURCE CODE	(b) MAINT LEVEL	(c) REC CODE	(2) FEDERAL STOCK NUMBER	REFERENCE NUMBER		(3) DESCRIPTION	MODELS USABLE ON CH-34C	(4) UNIT OF ISSUE	(5) QTY INC IN UNIT PACK	(6) QTY INC IN UNIT	(7) 30-DAY DS GS MAINT ALW (a) 1-20	(b) 21-50	(c) 51-100	(8) 1-YR ALW PER 100 EQUIP CNTGCY	(9) DEPOT MAINT ALW PER 100 EQUIP	(10) ILLUSTRATION (a) FIG NO	(b) ITEM NO
X2	F			S1630-61623-3	<78286>	.FILLER.....		EA		1						56	85
P	F		1560-633-4391	S1630-61007-4	<78286>	.ROD ASSEMBLY.....		EA		1	*	*	*		*	56	86
						ATTACHING PARTS											
			5306-292-8276	AN173H11A	<88044>	.BOLT,MACHINE.....		EA		2	*	*	*		*	56	87
			5310-167-0753	AN960PD10L	<88044>	.WASHER,FLAT.....		HD		4	*	*	*		*	56	
			5310-807-1467	MS21042-3	<96906>	.NUT.EXTENDED WASHER				2					*	56	
						---*---											
P	F		3110-690-8683	REPB3N2FS210	<21335>	..BEARING,BALL,ROD END.....		EA		1	*	*	*		*	56	88
			3110-563-9892	S1630-61007-3	<78286>	..BEARING,BALL,ROD END.....										56	
						RPL-BY 3110-682-2394											
P	F		3110-682-2394	S1630-61007-5	<78286>	..BEARING,BALL,ROD END.....		EA		1	*	*	*		*	56	89
						RPLS-- 3110-563-9892,											
			1560-327-3879	S1630-61008	<78286>	.BELL CRANK ASSEMLBY RPL-BY.										56	
						1560-330-6172											
P	F		1560-330-6172	S1630-61198	<78286>	.BELL CRANK ASSEMBLY,SERVO...		EA		1	*	*	REF		REF	56	90
						ACTUATING RPLS--											
						1560-327-3879											
						ATTACHING PARTS											
			5306-156-2542	AN174H17A	<88044>	.BOLT,MACHINE.....		HD		1	*	*	*		*	56	91
			5310-187-2354	AN960PD416	<88044>	.WASHER,FLAT.....		HD		2	*	*	*		*	56	
			5310-543-4443	MS20364-428A	<96906>	.NUT,SELF-LOCKING,HEXAGON....		HD		1	*	*	*		*	56	
			5306-550-3405	AN173H10A	<88044>	.BOLT,MACHINE.....		EA		1	*	*	*		*	56	92
			5310-167-0753	AN960PD10L	<88044>	.WASHER,FLAT.....		HD		2	*	*	*		*	56	
			5310-807-1467	MS21042-3	<96906>	.NUT.EXTENDED WASHER ...				1					*	56	
						---*---											
			2995-560-5356	S1630-61009-3	<78286>	.ROD ASSEMBLY RPL-BY.....										56	
						2995-632-2844											
P	F		2995-632-2844	S1630-61009-7	<78286>	.ROD ASSEMBLY RPLS--.....		EA		1	*	*	*		*	56	93
						2995-560-5356											
						ATTACHING PARTS											
			5306-292-8277	AN173H14A	<88044>	.BOLT,MACHINE.....		EA		1	*	*	*		*	56	94
			5310-167-0753	AN960PD10L	<88044>	.WASHER,FLAT.....		HD		1	*	*	*		*	56	95
			5310-183-4406	AN960PD10	<88044>	.WASHER,FLAT.....		HD		3	*	*	*		*	56	96
			5310-807-1467	MS21042-3	<96906>	.NUT.EXTENDED WASHER ...				1					*	56	97
P	F		1560-560-5390	S1630-80811-2	<78286>	.PAD,THROTTLE CONTROLS.....		EA		1	*	2	2		*	56	98
						---*---											
P	F		3110-690-8683	REPB3N2FS210	<21335>	..BEARING,BALL,ROD END.....		EA		1	*	*	*		REF	56	
P	F		3110-198-1264	FR3-5	<77896>	..BEARING,BALL,ROD END.....		EA		1	*	*	*		*	56	99A
			1620-775-5970	S1630-61618	<78286>	.THROTTLE CONTROL TORQUE.....		EA		1	*	*	*			56	100
						TUBE INSTALLATION USBL											
						EFF 55-4462 & SUBSEQUENT											
						SEE FIG.73 FOR BREAKDOWN											
				S1630-61602	<78286>	.THROTTLE CONTROL PULLEY.....				1						56	101
						BRACKET INSTALLATION USBL											
						EFF 55-4462 & SUBSEQUENT											
						SEE FIG.67 FOR BREAKDOWN											
				S1630-61600-1	<78286>	.BRACKET ASSEMBLY-PULLEY.....		EA		1						56	
						ATTACHING PARTS											
			5306-182-1959	AN4H11A	<88044>	.BOLT,MACHINE.....		HD		1	*	*	*		*	56	102
			5310-187-2354	AN960PD416	<88044>	.WASHER,FLAT.....		HD		2	*	*	*		*	56	
			5310-877-5796	MS21044N4	<96906>	.NUT,SELF-LOCKING,HEXAGON....		EA		1	*	*	*		*	56	
			5306-182-1958	AN4H10A	<88044>	.BOLT,MACHINE.....		HD		1	*	*	*		*	56	103

(1) SOURCE, MAINT AND REC CODE (a) SOURCE CODE	(b) MAINT LEVEL	(c) REC CODE	(2) FEDERAL STOCK NUMBER	REFERENCE NUMBER	(3) DESCRIPTION	MODELS USABLE ON CH-34C	(4) UNIT OF ISSUE	(5) QTY INC IN UNIT PACK	(6) QTY INC IN UNIT	(7) 30-DAY DS, GS MAINT ALW (a) 1-20	(b) 21-50	(c) 51-100	(8) 1-YR ALW PER 100 EQUIP CNTGCY	(9) DEPOT MAINT ALW PER 100 EQUIP	(10) ILLUSTRATION (a) FIG NO	(b) ITEM NO
			5310-187-2354	AN960PD416 <88044>	.WASHER,FLAT.....		HD		1	*	*	*		*	56	
			5310-184-9001	AN960PD416L <88044>	.WASHER,FLAT.....		HD		1	*	*	*		*	56	
			5310-877-5796	MS21044N4 <96906>	.NUT,SELF-LOCKING,HEXAGON....		EA		1	*	*	*		*	56	
					---*---											
			5315-598-4704	NAS427K24 <80205>	..PIN,SPRING.....		EA		1	*	*	*			56	
			5315-598-3035	NAS427W19 <80205>	..PIN,STRAIGHT,HEADLESS.....		EA		1	*	*	*		*	56	105
			5315-234-1856	MS24665-155 <96906>	..PIN,COTTER.....		HD		1	*	*	*		*	56	
			3020-288-3411	MS20219A2 <96906>	..PULLEY,GROOVED.....		EA		2	*	*	*		*	56	106
					ATTACHING PARTS											
			5306-182-1966	AN4H20A <88044>	..BOLT,MACHINE.....		HD		1	*	*	*		*	56	107
			5310-187-2354	AN960PD416 <88044>	..WASHER,FLAT.....		HD		4	*	*	*		*	56	
			5310-543-4443	MS20364-428A <96906>	..NUT,SELF-LOCKING,HEXAGON...		HD		1	*	*	*		*	56	
					---*---											
P	F		2995-560-5368	S1630-61621 <78286>	..BRACKET,PULLEY,THROTTLE....		EA		1	*	*	*		*	56	108
				S1630-61650 <78286>	.FUEL SELECTOR VALVE CONTROL.				1						56	109
					INSTALLATION SEE FIG.57											
					FOR BREAKDOWN											
P	F		1560-674-1184	S1630-61658 <78286>	.ANGLE,THROTTLE CONTROL.....		EA		1	*	*	*		*	56	110
					ATTACHING PARTS											
			5306-182-2057	AN3H4A <88044>	.BOLT,MACHINE.....		HD		1	*	*	*		*	56	111
			5310-167-0818	AN960-10 <88044>	.WASHER,FLAT.....		HD		2	*	*	*		*	56	
			5310-807-1467	MS21042-3 <96906>	.NUT,EXTENDED WASHER.....				1					*	56	
			5306-182-2058	AN3H5A <88044>	.BOLT,MACHINE.....		EA		1	*	*	*		*	56	112
			5310-167-0753	AN960PD10L <88044>	.WASHER,FLAT.....		HD		2	*	*	*		*	56	
			5310-807-1467	MS21042-3 <96906>	.NUT,EXTENDED WASHER				1					*	56	
					---*---											
				S1630-61650 <78286>	FUEL SELECTOR VALVE CONTROL..										57	
					INSTALLATION SEE FIG.55											
					& 56 FOR NHA											
			5340-061-1812	MS21251B3L <96906>	.TURNBUCKLE BODY.....		EA		2	*	*	*		*	57	1
				S1630-61159 <78286>	.PULLEY INSTALLATION.....				1						57	
			5305-984-6193	MS35206-245 <96906>	..SCREW,MACHINE.....		HD		4	*	*	*		*	57	2
			5310-167-0753	AN960PD10L <88044>	..WASHER,FLAT.....		HD		8	*	*	*		*	57	
			5310-807-1466	MS21042-08 <96906>	..NUT,EXTENDED WASHER.....				4	*	*	*		*	57	
P	F		1560-566-2412	S1630-61160-1 <78286>	..SEAL,SELECTOR VALVE.....		EA		1	*	*	*		*	57	3
					CONTROL,CABLE											
P	F		1560-566-2413	S1630-61160-2 <78286>	..SEAL,SELECTOR VALVE.....		EA		1	*	*	*		*	57	4
					CONTROL,CABLE											
MF	F			S1630-61158-4 <78286>	..CLIP.....		EA		1						57	5
					MAKEFR											
					AR 9535-554-1412 AL ALLY SH											
					ATTACHING PARTS											
				MS20470AD4 <96906>	..RIVET.....		EA		2						57	6
					---*---											
AF	F			S1630-61158 <78286>	..PULLEY ASSEMBLY.....		EA		1						57	7
					ATTACHING PARTS											

(1) SOURCE MAINT AND REC CODE (a) SOURCE CODE	(b) MAINT LEVEL	(c) REC LEVEL CODE	(2) FEDERAL STOCK NUMBER	REFERENCE NUMBER	(3) DESCRIPTION	MODELS USABLE ON CH-34C	(4) UNIT OF ISSUE	(5) QTY INC IN UNIT PACK	(6) QTY INC IN UNIT	(7) 30-DAY DS GS MAINT ALW (a) 1-20	(b) 21-50	(c) 51-100	(8) 1-YR ALW PER 100 EQUIP CNTGCY	(9) DEPOT MAINT ALW PER 100 EQUIP	(10) ILLUSTRATION (a) FIG NO	(b) ITEM NO
			5306-182-2058	AN3H5A <88044>	..BOLT,MACHINE.....		EA		2	*	*	*		*	57	8
			5310-167-0753	AN960PD10L <88044>	..WASHER,FLAT.....		HD		2	*	*	*		*	57	
					---*---											
X2	F			S1630-61158-3 <78286>	...BRACKET.....		EA		1						57	
MF	F			S1630-61158-1 <78286>	..FILLER ASSEMBLY.....		EA		1						57	9
					MAKEFR											
					AR 9330-576-3984 AL ALLY SH											
P	F		5310-551-7016	22A17A02 <72962>	...NUT,SELF-LOCKING,PLATE....		EA		2	*	*	*		*	57	10
MF	F			S1630-61158-2 <78286>	...FILLER.....		EA		1						57	12
					MAKEFR											
					AR 9330-576-3984 PLASTIC SH											
P	F		1560-566-2409	S1630-61069 <78286>	.BEARING ASSEMBLY,FUEL.....		EA		1	*	*	*		*	57	13
					SELECTOR											
					ATTACHING PARTS											
			5305-013-1904	AN500-6-10 <88044>	.SCREW,MACHINE.....		EA		4	*	*	*		*	57	14
			5310-187-2398	AN960PD6L <88044>	.WASHER,FLAT.....		HD		8	*	*	*		*	57	
			5310-631-1300	MS20364D632A <96906>	.NUT,SELF-LOCKING,HEXAGON....		HD		4	*	*	*		*	57	
					---*---											
AF	F			S1630-61152-4 <78286>	.CONTROL ASSEMBLY-FUEL.....		EA		1						57	15
					SELECTOR VALVE SEE FIG.58											
					FOR BREAKDOWN											
					ATTACHING PARTS											
				AN525D832-8 <88044>	.SCREW.....		EA		6						57	16
			5310-184-8966	AN960PD8 <88044>	.WASHER,FLAT.....		HD		6	*	*	*		*	57	
					---*---											
				S1630-61651 <78286>	.PULLEY BRACKET INSTALLATION.				1						57	
AF	F			S1630-61652 <78286>	..PULLEY ASSEMBLY.....		EA		1						57	17
					ATTACHING PARTS											
			5306-182-2061	AN3H10A <88044>	..BOLT,MACHINE.....		HD		1	*	*	*		*	57	18
			5310-183-4406	AN960PD10 <88044>	..WASHER,FLAT.....		HD		1	*	*	*		*	57	
P	F		5310-527-3796	2452-02 <72962>	..NUT,BARREL.....		EA		1	*	2	2			57	
			5306-182-2060	AN3H7A <88044>	..BOLT,MACHINE.....		HD		1	*	*	*		*	57	19
			5310-183-4406	AN960PD10 <88044>	..WASHER,FLAT.....		HD		1	*	*	*		*	57	
P	F		5310-527-3796	2452-02 <72962>	...NUT,BARREL.....		EA		1	*	REF	REF		*	57	
					---*---											
P	F		1560-919-9988	S1630-61652-2 <78286>	..BLOCK.....		EA		1	*	*	*		*	57	20
P	F		1560-944-4873	S1630-61652-3 <78286>	..BLOCK,PULLEY ASSEMBLY.....		EA		1	*	*	2		*	57	21
				S1630-61654 <78286>	.PULLEY INSTALLATION.....				1						57	
MF	F			S1630-61656 <78286>	..PLATE.....		EA		1						57	22
					MAKEFR											
					AR 9535-167-2279 AL ALLY SH											
					ATTACHING PARTS											
			5306-182-2013	AN3H24A <88044>	..BOLT,MACHINE.....		EA		2	*	*	*		*	57	23
			5310-167-0753	AN960PD10L <88044>	..WASHER,FLAT.....		HD		2	*	*	*		*	57	
					---*---											
			5340-801-4629	NAS430D3-88 <80205>	..SPACER.....		EA		2	*	*	*		*	57	24
X2	F			S1630-61655 <78286>	..PULLEY ASSEMBLY.....		EA		1						57	25
					ATTACHING PARTS											
			5306-182-2062	AN3H11A <88044>	..BOLT,MACHINE.....		HD		2	*	*	*		*	57	26
			5310-167-0753	AN960PD10L <88044>	..WASHER,FLAT.....		HD		2	*	*	*		*	57	
					---*---											
P	F		1560-627-8074	S1630-61657 <78286>	..RETAINER,SELECTOR VALVE....		EA		1	*	*	*		*	57	27

(1) SOURCE, MAINT AND REC CODE (a) SOURCE CODE	(b) MAINT LEVEL	(c) REC CODE	(2) FEDERAL STOCK NUMBER	REFERENCE NUMBER		(3) DESCRIPTION	MODELS USABLE ON CH-34C	(4) UNIT OF ISSUE	(5) QTY INC IN UNIT PACK	(6) QTY INC IN UNIT	(7) 30-DAY DS, GS MAINT ALW (a) 1-20	(b) 21-50	(c) 51-100	(8) 1-YR ALW PER 100 EQUIP CNTGCY	(9) DEPOT MAINT ALW PER 100 EQUIP	(10) ILLUSTRATION (a) FIG NO	(b) ITEM NO
			5315-058-9698	MS16562-191	<96906>	..PIN,SPRING.....		HD		2	*	*	*		*	57	28
			1560-563-6717	S1630-61062-1	<78286>	..CABLE ASSEMBLY,DRIVE..... PULLEY RPL-BY 4010-632-1195		EA			*	*	*		*	57	
P	F		4010-632-1195	NAS313C16-0402	<80205>	..WIRE ROPE ASSEMBLY..... RPLS-- 1560-563-6717		EA		1	*	*	*		*	57	29
			1560-623-5865	S1630-61631-27	<78286>	..CABLE ASSEMBLY,POWER..... PLANT CONTROLS RPL-BY 4010-853-1207										57	
P	F		4010-853-1207	NAS313H16-0262	<80205>	..WIRE ROPE ASSEMBLY..... RPLS-- 1560-623-5865		EA		1	*	*	*		*	57	
			1560-563-9894	S1630-61062-2	<78286>	..CABLE ASSEMBLY,DRIVE..... PULLEY RPL-BY 4010-632-1194										57	
P	F		4010-632-1194	NAS313C16-0312	<80205>	..WIRE ROPE ASSEMBLY..... RPLS-- 1560-563-9894		EA		1	*	*	*		*	57	30
			1560-623-5864	S1630-61631-29	<78286>	..CABLE ASSEMBLY,POWER..... PLANT CONTROLS RPL-BY 4010-853-0680										57	
P	F		4010-853-0680	NAS313H16-0362	<80205>	..WIRE ROPE ASSEMBLY..... RPLS-- 1560-623-5864		EA		1	*	*	*		*	57	
P	F		1620-675-1256	S1630-61056-1	<78286>	..PULLEY ASSEMBLY..... ATTACHING PARTS		EA		1	*	*	2		*	57	31
			5306-182-2058	AN3H5A	<88044>	..BOLT,MACHINE.....		EA		1	*	*	*		*	57	32
			5310-167-0753	AN960PD10L	<88044>	..WASHER,FLAT..... ---*---		HD		1	*	*	*		*	57	
X1				S1630-61057-2	<78286>	...PULLEY..... ATTACHING PARTS		EA		1						57	33
			5315-198-8093	AN386-1-7A	<88044>	...PIN,TAPERED,THREADED.....		EA		1	*	*	*		*	57	34
			5310-167-0685	AN975-3	<88044>	...WASHER,RECESSED.....		HD		1	*	*	*		*	57	
			5310-807-1467	MS21042-3	<96906>	...NUT,EXTENDED WASHER..... ---*---				1	*	*	*		*	57	
X1				S1630-61055	<78286>	...SHAFT ASSEMBLY,SELECTOR... VALVE CONTROL,LOWER GEAR		EA		1						57	
						CONTROL ASSEMBLY,FUEL..... SELECTOR VALVE										58	
AF	F			S1630-61152-4	<78286>	CONTROL ASSEMBLY-FUEL..... SELECTOR VALVE SEE FIG.57 FOR NHA		EA								58	
P	F		1560-574-6399	S1630-61027	<78286>	.HANDLE ASSEMBLY,SELECTOR.... VALVE CONTROL ATTACHING PARTS		EA		1	*	*	*		*	58	1
			5310-184-9001	AN960PD416L	<88044>	.WASHER,FLAT.....		HD		1	*	*	*		*	58	2
P	F		5310-222-4241	22K1-048	<72962>	.NUT,SELF-LOCKING,CAP..... ---*---		EA		1	*	*	*		*	58	
P	F		5310-579-0228	S1630-61038-1	<78286>	.WASHER,FLAT.....		EA		1	*	*	*		*	58	3

CODE (a) SOURCE CODE	(b) MAINT LEVEL	(c) REC CODE	FEDERAL STOCK NUMBER	REFERENCE NUMBER		DESCRIPTION	MODELS USABLE ON CH-34C	UOM ISSUE	INC IN UNIT PACK	INC IN UNIT	MAINT ALW PER 100 EQUIP CNTGCY (a) 1-20	(b) 21-50	(c) 51-100	MAINT ALW PER 100 EQUIP	(a) FIG NO	(b) ITEM NO
P	F		1560-657-2926	S1630-61042	<78286>	.PLATE,ASSEMBLY SECTION..... VALVE CONTROL		EA		1	*	*	*	*	58	4
X1				S1630-61052	<78286>	..PLATE,SELECTOR VALVE..... CONTROL DIAL		EA		1					58	
P	F		1560-574-6401	S1630-61143	<78286>	.PLATE,VALVE PULLEY GUARD.... ATTACHING PARTS		EA		1	*	*	*	*	58	5
			5305-622-9480	MS35265-51	<96906>	.SCREW,MACHINE.....				3	*	*	*	*	58	6
			5310-184-8966	AN960PD8	<88044>	.WASHER,FLAT.....		HD		6	*	*	*	*	58	
			5310-807-1466	MS21042-8	<96906>	.NUT,EXTENDED WASHER.....				3	*	*	*	*	58	
						---*---										
				S1630-61073	<78286>	.SPACER,SLEEVE.....		EA		3					58	7
			5930-548-7513	AN3234-3	<88044>	.SWITCH,SENSITIVE RPL-BY.... 5930-833-5123									58	
P	O		5930-833-5123	MS25253-2	<96906>	.SWITCH,SENSITIVE RPLS--.... 5930-548-7513 ATTACHING PARTS		EA		1	*	*	*	*	58	8
			5310-550-5009	MS15795-704	<96906>	.WASHER,FLAT.....		HD		2	*	*	*	*	58	
			5310-857-5548	MS21044D04	<96906>	.NUT,SELF-LOCKING,HEXAGON....		EA		2	*	*	*	*	58	
						---*---										
MF	O			S1630-61100-2	<78286>	.SPACER,MOUNTING BRACKET..... MAKEFR AR 9330-290-3458 AL ALLY SH		EA		1					58	10
P	F		5930-504-6855	JV5	<91929>	.ADAPTER,SWITCH ACTUATOR.....		EA		1	*	*	*	*	58	11
			5315-058-9698	MS16562-191	<96906>	.PIN,SPRING.....		HD		2	*	*	*	*	58	12
P	F		4010-632-1196	NAS313C17-0574	<80205>	.WIRE ROPE ASSEMBLY,SINGLE... LEG		EA		1	*	*	*	*	58	13
			1560-613-9283	S1630-61631-31	<78286>	.CABLE ASSEMBLY RPL-BY..... 4010-852-9798									58	
P	F		4010-852-9798	NAS313H17-0714	<80205>	.WIRE ROPE ASSEMBLY,SINGLE... LEG RPLS-- 1560-613-9283		EA		1	*	*	*	*	58	
P	F		4010-632-1197	NAS313C17-0660	<80205>	.WIRE ROPE ASSEMBLY,..... SINGLE LEG		EA		1	*	*	*	*	58	14
			1560-613-0950	S1630-61631-33	<78286>	.CABLE ASSEMBLY RPL-BY..... PN NAS 313H17-0604									58	
			4010-926-4601	NAS313H17-0604	<80205>	.WIRE ROPE ASSEMBLY,SINGLE... LEG RPLS-- PN 1630-61631-33		EA		1	*	*	*		58	
P	F		1560-565-8487	S1630-61144	<78286>	.PULLEY,GROOVED..... ATTACHING PARTS		EA		1	*	*	*	*	58	15
P	F		5315-826-3251	MS16562-223	<96906>	.PIN,SPRING.....		EA		1	*	*	*	REF	58	16
						---*---										
			1560-565-5611	S1630-61152-1	<78286>	.GEAR BOX ASSEMBLY RPL-BY... 1560-625-9360									58	
P	F	R	1560-625-9360	S1630-61152-2	<78286>	.GEAR BOX ASSEMBLY..... RPLS-- 1560-565-5611		EA		1	*	*	*	*	58	17
			5305-145-7011	AN503-8-8	<88044>	..SCREW,MACHINE.....		HD		4	*	*	*	*	58	18
			5310-184-8966	AN960PD8	<88044>	..WASHER,FLAT.....		HD		4	*	*	*	*	58	
P	F		1560-565-5610	S1630-61141	<78286>	..SUPPORT ASSEMBLY-BEARING...		EA		1	*	*	*	*	58	20
P	F		1560-591-6727	S1630-61148-1	<78286>	..SHAFT ASSEMBLY,CONTROL..... HANDLE		EA		1	*	*	*	*	58	21
X1				S1630-61137	<78286>	...GEAR,CONTROL HANDLE.....		EA		1					58	22
X1				S1630-61036-1	<78286>	...SHAFT.....		EA		1					58	24

(1) SOURCE, MAINT AND REC CODE (a) SOURCE CODE	(b) MAINT LEVEL	(c) REC CODE	(2) FEDERAL STOCK NUMBER	REFERENCE NUMBER		(3) DESCRIPTION	MODELS USABLE ON CH-34C	(4) UNIT OF ISSUE	(5) QTY INC IN UNIT PACK	(6) QTY INC IN UNIT	(7) 30-DAY DS GS MAINT ALW (a) 1-20	(b) 21-50	(c) 51-100	(8) 1-YR ALW PER 100 EQUIP CNTGCY	(9) DEPOT MAINT ALW PER 100 EQUIP	(10) ILLUSTRATION (a) FIG NO	(b) ITEM NO
			5305-145-7016	AN503-10-6	<88044>	..SCREW,MACHINE.....		EA		3	*	*	*		*	58	25
			5310-167-0753	AN960PD10L	<88044>	..WASHER,FLAT.....		HD		3	*	*	*		*	58	
P	F		1560-613-3007	S1630-61142	<78286>	..BRACKET,SELECTOR VALVE..... CONTROL		EA		1	*	*	*		*	58	26
P	F		1560-625-9361	S1630-61146	<78286>	..SHAFT ASSEMBLY,PULLEY DRIVE		EA		1	*	*	*		*	58	27
X1				F589	<12204>	...BEARING,SLEEVE.....		AV		1						58	
P	H		1560-530-7303	S1630-61049	<78286>	..SHIM.....		EA		1	*	*	*		*	58	28
MF	F			NAS43DD4-11	<80205>	..SPACER..... MAKEFR AR 5340-632-1254 AL ALLY SH		EA		1						58	
				S1630-61078	<78286>	MIXTURE AND SELECTOR VALVE... CONTROLS PULLEY INSTALLATION USBL EFF 53-4475 THRU 54-3050 SEE FIG.55 FOR NHA										59	
AF	F			S1630-61078-1	<78286>	.PULLEY ASSEMBLY..... ATTACHING PARTS		EA		1						59	1
			5305-180-0012	AN525-10R10	<88044>	.SCREW,MACHINE.....		HD		4	*	*	*		*	59	2
			5310-167-0753	AN960PD10L	<88044>	.WASHER,FLAT.....		HD		8	*	*	*		*	59	
			5310-807-1467	MS21042-3	<96906>	.NUT,EXTENDED WASHER.....				4	*	*	*		*	59	
			5305-180-0012	AN525-10R10	<88044>	.SCREW,MACHINE.....		HD		2	*	*	*		*	59	3
			5310-167-0753	AN960PD10L	<88044>	.WASHER,FLAT.....		HD		4	*	*	*		*	59	
			5310-807-1467	MS21042-3	<96906>	.NUT,EXTENDED WASHER.....				2	*	*	*		*	59	
			5305-993-1848	MS35207-265	<96906>	.SCREW,MACHINE.....		HD		2	*	*	*		*	59	4
			5310-167-0753	AN960PD10L	<88044>	.WASHER,FLAT.....		HD		4	*	*	*		*	59	
			5310-807-1467	MS21042-3	<96906>	.NUT,EXTENDED WASHER..... ---*---				2	*	*	*		*	59	
			3020-287-7919	MS20219-2	<96906>	..PULLEY,GROOVE..... ATTACHING PARTS		EA		6	*	*	2		*	59	5
			5306-282-2678	AN4H43A	<88044>	..BOLT,MACHINE.....		EA		1	*	*	*		*	59	6
			5310-187-2354	AN960PD416	<88044>	..WASHER,FLAT.....		HD		2	*	*	*		*	59	
			5310-877-5796	MS21044N4	<96906>	..NUT,SELF-LOCKING,HEXAGON... ---*---		EA		1	*	*	*		*	59	
				NAS43DD4-28	<80205>	..SPACER,SLEEVE.....		EA		1						59	7
P	F		5340-580-5791	NAS43DD4-16	<80205>	..SPACER,SLEEVE.....		EA		1	*	*	*		REF	59	8
MF	F			NAS43DD4-20	<80205>	..SPACER,SLEEVE..... MAKEFR AR 5340-632-1254 AL ALLY SH		EA		1						59	9
			5310-183-4406	AN960PD10	<88044>	..WASHER,FLAT.....		HD		2	*	*	*		*	59	
			5315-234-1856	MS24665-155	<96906>	..PIN,COTTER.....		HD		2	*	*	*		*	59	
X2	F			S1630-61078-6	<78286>	..BRACKET ASSEMBLY.....		EA		1						59	11
X2	F			S1630-61078-2	<78286>	...BRACKET-SPOT WELDED.....		EA		1						59	12
X2	F			S1630-61078-5	<78286>	...BRACKET-SPOT WELDED.....		EA		1						59	13
X2	F			S1630-61078-3	<78286>	.CHANNEL.....		EA		1						59	14
MF	F			NAS43DD4-13	<80205>	..SPACER..... MAKEFR		EA		1						59	

(1) SOURCE, MAINT AND REC CODE (a) SOURCE CODE	(b) MAINT LEVEL	(c) REC CODE	(2) FEDERAL STOCK NUMBER	REFERENCE NUMBER	(3) DESCRIPTION	MODELS USABLE ON CH-34C	(4) UNIT OF ISSUE	(5) QTY INC IN UNIT PACK	(6) QTY INC IN UNIT	(7) 30-DAY DS GS MAINT ALW (a) 1-20	(b) 21-50	(c) 51-100	(8) 1-YR ALW PER 100 EQUIP CNTGCY	(9) DEPOT MAINT ALW PER 100 EQUIP	(10) ILLUSTRATION (a) FIG NO	(b) ITEM NO
					CONTINUED										59	
					AR 5340-632-1254 AL ALLY SH											
MF	F			NAS43DD4-51 <80205>	..SPACER.....		EA		1						59	
					MAKEFR											
					AR 5340-632-1254 AL ALLY SH											
				S1630-61646 <78286>	MIXTURE AND SELECTOR VALVE... CONTROLS PULLEY INSTALLATION USBL EFF 55-4462 AND SUBSEQUENT SEE FIG.56 FOR NHA										60	
				S1630-61646-1 <78286>	.PULLEY ASSEMBLY.....		EA		1						60	1
					ATTACHING PARTS											
			5306-182-2059	AN3H6A <88044>	.BOLT,MACHINE.....		HD		2	*	*	*		*	60	2
			5310-167-0753	AN960PD10L <88044>	.WASHER,FLAT.....		HD		2	*	*	*		*	60	
			5310-183-4406	AN960PD10 <88044>	.WASHER,FLAT.....		HD		2	*	*	*		*	60	
			5310-877-5797	MS21044N3 <96906>	.NUT,SELF-LOCKING,HEXAGON....		EA		2	*	*	*		*	60	
			5306-182-2058	AN3H5A <88044>	.BOLT,MACHINE.....		EA		6	*	*	*		*	60	3
			5310-167-0753	AN960PD10L <88044>	.WASHER,FLAT.....		HD		6	*	*	*		*	60	
			5310-183-4406	AN960PD10 <88044>	.WASHER,FLAT.....		HD		6	*	*	*		*	60	
			5310-877-5797	MS21044N3 <96906>	.NUT,SELF-LOCKING,HEXAGON....		EA		6	*	*	*		*	60	
					---*---											
X2	F			S1630-61078-3 <78286>	..CHANNEL.....		EA		1						60	4
			5315-141-6356	NAS427K40 <80205>	..PIN,SPRING.....		EA		1	*	*	*		*	60	5
			5315-598-4703	NAS427K25 <80205>	..PIN-PULLEY GUARD.....		EA		1	*	*	*		*	60	6
			3020-542-0530	MS20219-1 <96906>	..PULLEY,GROOVE.....		EA		2	*	*	*		*	60	7
					ATTACHING PARTS											
			5306-182-1966	AN4H20A <88044>	..BOLT,MACHINE.....		HD		1	*	*	*		*	60	8
			5310-184-9001	AN960PD416L <88044>	..WASHER,FLAT.....		HD		1	*	*	*		*	60	
			5310-187-2354	AN960PD416 <88044>	..WASHER,FLAT.....		HD		2	*	*	*		*	60	
			5310-543-4443	MS20364-428A <96906>	..NUT,SELF-LOCKING,HEXAGON...		HD		1	*	*	*		*	60	
					---*---											
X2	F			K22990 <01634>	..ANGLE.....		EA		1						60	10
			3020-287-7919	MS20219-2 <96906>	..PULLEY,GROOVE.....		EA		4	*	*	REF		*	60	11
					ATTACHING PARTS											
			5306-182-2021	AN4H27A <88044>	..BOLT,MACHINE.....		EA		1	*	*	*		*	60	12
			5310-187-2354	AN960PD416 <88044>	..WASHER,FLAT.....		HD		2	*	*	*		*	60	
			5310-184-9001	AN960PD416L <88044>	..WASHER,FLAT-UNDER HEAD OF.. BOLT		HD		1	*	*	*		*	60	
			5310-543-4443	MS20364-428A <96906>	..NUT,SELF-LOCKING,HEXAGON...		HD		1	*	*	*		*	60	
					---*---											
MF	F			NAS43DD4-12 <80205>	..SPACER.....		EA		1						60	13
					MAKEFR											
					AR 5340-632-1254 AL ALLY SH											
MF	F			NAS43DD4-20 <80205>	..SPACER,SLEEVE.....		EA		1						60	14
					MAKEFR											
					AR 5340-632-1254 AL ALLY SH											

(1) SOURCE, MAINT AND REC CODE (a) SOURCE CODE	(b) MAINT LEVEL	(c) REC CODE	(2) FEDERAL STOCK NUMBER	REFERENCE NUMBER		(3) DESCRIPTION	MODELS USABLE ON CH-34C	(4) UNIT OF ISSUE	(5) QTY INC IN UNIT PACK	(6) QTY INC IN UNIT	(7) 30-DAY DS-GS MAINT ALW (a) 1-20	(b) 21-50	(c) 51-100	(8) 1-YR ALW PER 100 EQUIP CNTGCY	(9) DEPOT MAINT ALW PER 100 EQUIP	(10) ILLUSTRATION (a) FIG NO	(b) ITEM NO
X2	F			S1630-61645-1	<78286>	..BRACKET.....		EA		1						60	15
				S1630-61080	<78286>	MIXTURE AND SELECTOR VALVE... CONTROLS PULLEY INSTALLATION USBL EFF 53-4475 THRU 54-3050 SEE FIG.55 FOR NHA										61	
X2	F			S1630-61080-1	<78286>	.PULLEY ASSEMBLY..... ATTACHING PARTS		EA		1						61	1
			5305-180-C012	AN525-10R10	<88044>	.SCREW,MACHINE.....		HD		4	*	*	*		*	61	2
			5310-183-4406	AN960PD10	<88044>	.WASHER,FLAT.....		HD		4	*	*	*		*	61	
			5310-807-1467	MS21042-3	<96906>	.NUT,EXTENDED WASHER..... ---*---				4	*	*	*		*	61	
			3020-287-7919	MS20219-2	<96906>	..PULLEY,GROOVE..... ATTACHING PARTS		EA		4	*	*	REF		*	61	3
			5306-182-2019	AN4H25A	<88044>	..BOLT,MACHINE.....		EA		1	*	*	*		*	61	4
			5310-187-2354	AN960PD416	<88044>	..WASHER,FLAT.....		HD		2	*	*	*		*	61	
			5310-877-5796	MS21044N4	<96906>	..NUT,SELF-LOCKING,HEXAGON... ---*---		EA		1	*	*	*		*	61	
MF	F			NAS43DD4-20	<80205>	..SPACER,SLEEVE..... MAKEFR AR 5340-632-1254 AL ALLY SH		EA		1						61	5
MF	F			S1630-61080-5	<78286>	..SUPPORT..... MAKEFR AR 9535-554-1412 AL ALLY SH		EA		1						61	6
MF	F			S1630-61080-6	<78286>	..SUPPORT..... MAKEFR AR 9535-554-1412 AL ALLY SH		EA		1						61	7
			1560-565-8486	S1630-61080-10	<78286>	.GUIDE 035-AFT-CMPL-W..... TM1-1H-34A-573		EA			*	*	*			61	8
			5305-855-0969	MS24269-11	<88044>	.SCREW,TAPPING THREAD CUTTING				5	*	*	*		*	61	9
X2	F			S1630-61080-2	<78286>	.PULLEY ASSEMBLY.....		EA		1						61	10
			5315-080-0171	MS20392-2C95	<96906>	..PIN,STRAIGHT,HEADED.....		EA		1	*	*	*		*	61	11
			5310-183-4406	AN960PD10	<88044>	..WASHER,FLAT.....		HD		1	*	*	*		*	61	
			5315-234-1856	MS24665-155	<96906>	..PIN,COTTER.....		HD		1	*	*	*		*	61	
			3020-287-7919	MS20219-2	<96906>	..PULLEY,GROOVE..... ATTACHING PARTS		EA		4	*	*	REF		*	61	12
			5306-207-9791	AN4H33A	<88044>	..BOLT,MACHINE.....		EA		1	*	*	*		*	61	13
			5310-187-2354	AN960PD416	<88044>	..WASHER,FLAT.....		HD		2	*	*	*		*	61	
			5310-877-5796	MS21044N4	<96906>	..NUT,SELF-LOCKING,HEXAGON... ---*---		EA		1	*	*	*		*	61	
P	F		5340-580-5791	NAS43DD4-16	<80205>	..SPACER,SLEEVE.....		EA		1	*	*	*		REF	61	14
MF	F			NAS43DD4-20	<80205>	..SPACER,SLEEVE..... MAKER AR 5340-632-1254 AL ALLY SH		EA		1						61	15
X2	F			S1630-61080-3	<78286>	..SUPPORT ASSEMBLY..... ATTACHING PARTS		EA		1						61	17

(1) SOURCE, MAINT AND REC CODE (a) SOURCE CODE	(b) MAINT LEVEL	(c) REC CODE	(2) FEDERAL STOCK NUMBER	(3) DESCRIPTION REFERENCE NUMBER			MODELS USABLE ON CH-34C	(4) UNIT OF ISSUE	(5) QTY INC IN UNIT PACK	(6) QTY INC IN UNIT	(7) 30-DAY DS/GS MAINT ALW (a) 1-20	(b) 21-50	(c) 51-100	(8) 1-YR ALW PER 100 EQUIP CNTGCY	(9) DEPOT MAINT ALW PER 100 EQUIP	(10) ILLUSTRATION (a) FIG NO	(b) ITEM NO
				MS20470AD4	<96906>	..RIVET.....		EA		5						61	19
						---*---											
X2	F			S1630-61080-9	<78286>	...SUPPORT.....		EA		1						61	20
						ATTACHING PARTS											
				MS20470AD4	<96906>	...RIVET.....		EA		3						61	21
						---*---											
X2	F			S1630-61080-7	<78286>	...ANGLE.....		EA		1						61	22
X2	F			S1630-61080-4	<78286>	..SUPPORT ASSEMBLY.....		EA		1						61	23
						ATTACHING PARTS											
				MS20435M5	<96906>	..RIVET.....		EA		2						61	24
				MS20470AD4	<96906>	..RIVET.....		EA		5						61	25
						---*---											
X2	F			S1630-61080-9	<78286>	...SUPPORT.....		EA		1						61	26
X2	F			S1630-61080-8	<78286>	...ANGLE.....		EA		1						61	28
				S1630-61081-19	<78286>	MIXTURE AND CARBURETOR AIR... CONTROLS PULLEY AND TORQUE TUBE INSTALLATION USBL EFF 53-4475 THRU 54-3050 SEE FIG.55 FOR NHA										62	
			5310-187-2354	AN960PD416	<88044>	.WASHER,FLAT.....		HD		2	*	*	*		*	62	1
			5310-543-4443	MS20364-428A	<96906>	.NUT,SELF-LOCKING,HEXAGON....		HD		2	*	*	*		*	62	
AF	F			S1630-61081-5	<78286>	.BRACKET ASSEMBLY.....		EA		1						62	2
						ATTACHING PARTS											
			5306-182-2058	AN3H5A	<88044>	.BOLT,MACHINE.....		EA		2	*	*	*		*	62	3
			5310-183-4406	AN960PD10	<88044>	.WASHER,FLAT.....		HD		4	*	*	*		*	62	
			5310-807-1467	MS21042-3	<96906>	.NUT,EXTENDED WASHER.....				2	*	*	*		*	62	
						---*---											
P	F		3110-198-1010	MS20218-1	<96906>	..BEARING,BALL,BELLCRANK.....		EA		1	*	*	*		REF	62	4
						RPLS-- 3110-143-3034											
						ATTACHING PARTS											
				MS20470AD4	<96906>	..RIVET.....		EA		6						62	5
						---*---											
MF	F			S1630-61081-12	<78286>	..BRACKET.....		EA		1						62	6
						MAKEFR											
						AR 9535-167-2280 AL ALLY SH											
AF	F			S1630-61081-6	<78286>	.BRACKET ASSEMBLY.....		EA		1						62	7
						ATTACHING PARTS											
			5306-182-2058	AN3H5A	<88044>	.BOLT,MACHINE.....		EA		2	*	*	*		*	62	8
			5310-183-4406	AN960PD10	<88044>	.WASHER,FLAT.....		HD		4	*	*	*		*	62	
			5310-807-1467	MS21042-3	<96906>	.NUT,EXTENDED WASHER.....				2	*	*	*		*	62	
						---*---											
P	F		3110-198-1010	MS20218-1	<96906>	..BEARING,BALL,BELLCRANK.....		EA		1	*	*	*		REF	62	9
						RPLS-- 3110-143-3034											
						ATTACHING PARTS											
				MS20470AD4	<96906>	..RIVET.....		EA		6						62	10
						---*---											

(1) SOURCE, MAINT AND REC CODE (a) SOURCE CODE	(b) MAINT LEVEL	(c) REC CODE	(2) FEDERAL STOCK NUMBER	(3) DESCRIPTION REFERENCE NUMBER			MODELS USABLE ON CH-34C	(4) UNIT OF ISSUE	(5) QTY INC IN UNIT PACK	(6) QTY INC IN UNIT	(7) 30-DAY DS/GS MAINT ALW (a) 1-20	(b) 21-50	(c) 51-100	(8) 1-YR ALW PER 100 EQUIP CNTGCY	(9) DEPOT MAINT ALW PER 100 EQUIP	(10) ILLUSTRATION (a) FIG NO	(b) ITEM NO
MF	F			S1630-61081-13	<78286>	..BRACKET.....		EA		1						62	11
						MAKEFR											
						AR 9535-167-2280 AL ALLY SH											
			5310-141-1795	AN960-416	<88044>	.WASHER,FLAT.....		HD		2	*	*	*		*	62	12
			5310-187-2354	AN960PD416	<88044>	.WASHER,FLAT.....		HD		2	*	*	*		*	62	13
P	F		2995-332-3517	S1630-61081-2	<78286>	.PULLEY ASSEMBLY,MIXTURE.....		EA		1	*	*	*		*	62	14
						AND CARBURETOR AIR CONTROL											
AF	F			S1630-61081-4	<78286>	.BRACKET ASSEMBLY.....		EA		1						62	15
						ATTACHING PARTS											
			5306-182-2058	AN3H5A	<88044>	.BOLT,MACHINE.....		EA		2	*	*	*		*	62	16
			5310-183-4406	AN960PD10	<88044>	.WASHER,FLAT.....		HD		4	*	*	*		*	62	
			5310-807-1467	MS21042-3	<96906>	.NUT,EXTENDED WASHER.....				2	*	*	*		*	62	
						---*---											
P	F		3110-198-1010	MS20218-1	<96906>	..BEARING,BALL,BELLCRANK.....		EA		1	*	*	*		REF	62	17
						RPLS-- 3110-143-3034											
AF	F			S1630-61081-18	<78286>	.SHAFT ASSEMBLY.....		EA		1						62	
			1560-327-3881	S1630-61011	<78286>	..LEVER,TORQUE TUBE RPL-BY..										62	
						1560-330-6171											
P	F		1560-330-6171	S1630-61197	<78286>	..LEVER,TORQUE TUBE RPLS--..		EA		1	*	*	*		REF	62	20
						1560-327-3881											
						ATTACHING PARTS											
			5315-298-1035	AN386-2-7A	<88044>	..PIN,TAPERED,THREADED.....		EA		1	*	*	*		*	62	21
			5310-167-0685	AN975-3	<88044>	..WASHER,RECESSED.....		HD		1	*	*	*		*	62	
			5310-807-1467	MS21042-3	<96906>	..NUT,EXTENDED WASHER.....				1	*	*	*		*	62	
						---*---											
P	F		1560-340-1226	S1630-61161	<78286>	..PULLEY ASSEMBLY,MIXTURE....		EA		1	*	*	*		*	62	22
						RPLS-- 1560-332-3518											
						ATTACHING PARTS											
			5315-298-1035	AN386-2-7A	<88044>	..PIN,TAPERED,THREADED.....		EA		1	*	*	*		*	62	23
			5310-167-0685	AN975-3	<88044>	..WASHER,RECESSED.....		HD		1	*	*	*		*	62	
			5310-807-1467	MS21042-3	<96906>	..NUT,EXTENDED WASHER.....				1	*	*	*		*	62	
						---*---											
P	F		2995-332-3519	S1630-61081-7	<78286>	..TORQUE TUBE ASSEMBLY.....		EA		1	*	*	*		*	62	24
				MS20470AD4	<96906>	...RIVET.....		EA		4						62	25
				S1630-61086	<78286>	THROTTLE CONTROL PULLEY.....										63	
						INSTALLATION USBL EFF											
						53-4475 THRU 54-3050 SEE											
						FIG.55 FOR NHA											
AF	F			S1630-61086-6	<78286>	.PULLEY ASSEMBLY.....		EA		1						63	1
						ATTACHING PARTS											
			5306-182-2057	AN3H4A	<88044>	.BOLT,MACHINE.....		HD		2	*	*	*		*	63	2
			5310-167-0753	AN960PD10L	<88044>	.WASHER,FLAT.....		HD		4	*	*	*		*	63	
			5310-877-5797	MS21044N3	<96906>	.NUT,SELF-LOCKING,HEXAGON....		EA		2	*	*	*		*	63	
			5306-182-2062	AN3H11A	<88044>	.BOLT,MACHINE.....		HD		2	*	*	*		*	63	3
			5310-167-0753	AN960PD10L	<88044>	.WASHER,FLAT.....		HD		4	*	*	*		*	63	
			5310-877-5797	MS21044N3	<96906>	.NUT,SELF-LOCKING,HEXAGON....		EA		2	*	*	*		*	63	

(1) SOURCE, MAINT AND REC CODE (a) SOURCE CODE	(b) MAINT LEVEL	(c) REC CODE	(2) FEDERAL STOCK NUMBER	REFERENCE NUMBER		(3) DESCRIPTION	MODELS USABLE ON CH-34C	(4) UNIT OF ISSUE	(5) QTY INC IN UNIT PACK	(6) QTY INC IN UNIT	(7) 30-DAY DS GS MAINT ALW (a) 1-20	(b) 21-50	(c) 51-100	(8) 1-YR ALW PER 100 EQUIP CNTGCY	(9) DEPOT MAINT ALW PER 100 EQUIP	(10) ILLUSTRATION (a) FIG NO	(b) ITEM NO
			5306-182-2057	AN3H4A	<88044>	.BOLT,MACHINE.....		HD		1	*	*	*		*	63	4
			5310-167-0753	AN960PD10L	<88044>	.WASHER,FLAT.....		HD		1	*	*	*		*	63	
			5310-167-0765	AN970-3	<88044>	.WASHER,FLAT.....		HD		1	*	*	*		*	63	
			5310-877-5797	MS21044N3	<96906>	.NUT,SELF-LOCKING,HEXAGON....		EA		1	*	*	*		*	63	
						---*---											
AF	F			S1630-61086-7	<78286>	.PULLEY ASSEMBLY..... ATTACHING PARTS		EA		1						63	5
			5306-182-2005	AN3H14A	<88044>	.BOLT,MACHINE.....		HD		4	*	*	*		*	63	6
			5310-167-0753	AN960PD10L	<88044>	.WASHER,FLAT.....		HD		8	*	*	*		*	63	
			5310-877-5797	MS21044N3	<96906>	.NUT,SELF-LOCKING,HEXAGON....		EA		4	*	*	*		*	63	
			5306-182-2057	AN3H4A	<88044>	.BOLT,MACHINE.....		HD		2	*	*	*		*	63	7
			5310-167-0753	AN960PD10L	<88044>	.WASHER,FLAT.....		HD		4	*	*	*		*	63	
			5310-877-5797	MS21044N3	<96906>	.NUT,SELF-LOCKING,HEXAGON....		EA		2	*	*	*		*	63	
						---*---											
				S1630-61084	<78286>	THROTTLE PULLEY BRACKET..... INSTALLATION USBL EFF 53-4475 THRU 54-3050 SEE FIG.55 FOR NHA										64	
				S1630-61084-6	<78286>	.PULLEY ASSEMBLY..... ATTACHING PARTS		EA		1						64	
			5306-182-2057	AN3H4A	<88044>	.BOLT,MACHINE.....		HD		2	*	*	*		*	64	1
			5310-167-0753	AN960PD10L	<88044>	.WASHER,FLAT.....		HD		4	*	*	*		*	64	
			5310-877-5797	MS21044N3	<96906>	.NUT,SELF-LOCKING,HEXAGON....		EA		2	*	*	*		*	64	
			5306-182-2005	AN3H14A	<88044>	.BOLT,MACHINE.....		HD		2	*	*	*		*	64	2
			5310-167-0753	AN960PD10L	<88044>	.WASHER,FLAT.....		HD		4	*	*	*		*	64	
			5310-877-5797	MS21044N3	<96906>	.NUT,SELF-LOCKING,HEXAGON....		EA		2	*	*	*		*	64	
						---*---											
P	F		1560-565-5607	S1630-61085-5	<78286>	..PULLEY ASSEMBLY..... ATTACHING PARTS		EA		1	*	*	*		*	64	3
			5306-182-1962	AN4H14A	<88044>	..BOLT,MACHINE.....		HD		1	*	*	*		*	64	4
			5310-184-9001	AN960PD416L	<88044>	..WASHER,FLAT.....		HD		2	*	*	*		*	64	
			5310-877-5796	MS21044N4	<96906>	..NUT,SELF-LOCKING,HEXAGON...		EA		1	*	*	*		*	64	
						---*---											
P	F		5340-580-5791	NAS43DD4-16	<80205>	..SPACER,SLEEVE.....		EA		2	*	*	*		REF	64	5
P	F		1560-622-6293	S1630-61640	<78286>	ARM ASSEMBLY-THROTTLE..... CONTROL USBL EFF 55-4462 AND SUBSEQUENT SEE FIG.56 FOR NHA		EA			*	*	*			65	
P	F		2995-560-5363	S1630-61613	<78286>	.CAP,THROTTLE CONTROLS..... ATTACHING PARTS		EA		1	*	2	2		*	65	1

(1) SOURCE, MAINT AND REC CODE (a) SOURCE CODE	(b) MAINT CODE	(c) REC CODE	(2) FEDERAL STOCK NUMBER	REFERENCE NUMBER	(3) DESCRIPTION	MODELS USABLE ON CH-34C	(4) UNIT OF ISSUE	(5) QTY INC IN UNIT PACK	(6) QTY INC IN UNIT	(7) 30-DAY DS GS MAINT ALW (a) 1-20	(b) 21-50	(c) 51-100	(8) 1-YR ALW PER 100 EQUIP CNTGCY	(9) DEPOT MAINT ALW PER 100 EQUIP	(10) ILLUSTRATION (a) FIG NO	(b) ITEM NO
			5306-156-2391	AN24-32A	<88044> .BOLT,CLEVIS.....		EA		1	*	*	*		*	65	2
			5310-184-9001	AN960PD416L	<88044> .WASHER,FLAT.....		HD		2	*	*	*		*	65	
			5310-543-4443	MS20364-428A	<96906> .NUT,SELF-LOCKING,HEXAGON....		HD		1	*	*	*		*	65	
					---*---											
X2	F		1560-563-9900	S1630-61616	<78286> .FILLER,ARM THROTTLE CONTROL.		EA		2	*	*	*		*	65	3
			5315-514-0446	NAS427K27	<80205> .PIN.....		EA		1	*	*	*		*	65	4
			5315-234-1856	MS24665-155	<96906> .PIN,COTTER.....		HD		2	*	*	*		*	65	5
			5310-550-5009	MS15795-704	<96906> .WASHER,FLAT.....		HD		2	*	*	*		*	65	
			5315-811-1272	MS20392-1C55	<96906> .PIN,STRAIGHT,HEADED.....		EA		2	*	*	*		*	65	6
			3020-288-3411	MS20219A2	<96906> .PULLEY,GROOVE.....		EA		2	*	*	*		*	65	7
					ATTACHING PARTS											
			5306-180-3360	AN4H21A	<88044> .BOLT,MACHINE.....		HD		1	*	*	*		*	65	8
			5310-184-9001	AN960PD416L	<88044> .WASHER,FLAT.....		HD		2	*	*	*		*	65	
			5310-543-4443	MS20364-428A	<96906> .NUT,SELF-LOCKING,HEXAGON....		HD		1	*	*	*		*	65	
					---*---											
X2	F		1560-563-9909	S1630-61640-3	<78286> ..CHANNEL ASSEMBLY.....		EA		1	*	*	*		*	65	
X2	F			S1630-61639-1	<78286> ...CHANNEL U/O.....		EA		1						65	10
					PN S1630-61640-2											
					ATTACHING PARTS											
				MS20470AD4	<96906> ...RIVET.....		EA		32						65	11
					---*---											
P	F		2915-560-5362	S1630-61612	<78286> ...HOUSING ASSEMBLY,.....		EA		1	*	*	*		*.	65	12
					THROTTLE CONTROLS											
AF	F			S1630-61625	<78286> BRACKET ASSEMBLY-THROTTLE....		EA								66	
					CONTROL PULLEY USBL EFF											
					55-4462 AND SUBSEQUENT SEE											
					FIG.56 FOR NHA											
			5315-597-1642	NAS427K17	<80205> .PIN,SPRING.....		EA		1	*	*	*		*	66	1
			5315-597-1600	NAS427K22	<80205> .PIN,SPRING.....		EA		1	*	*	*		*	66	2
			5306-182-2038	AN4H22A	<88044> .BOLT,MACHINE.....		HD		1	*	*	*		*	66	3
			5310-187-2354	AN960PD416	<88044> .WASHER,FLAT.....		HD		4	*	*	*		*	66	
			5310-543-4443	MS20364-428A	<96906> .NUT,SELF-LOCKING,HEXAGON....		HD		1	*	*	*		*	66	
			5340-810-1746	NAS43DD4-21	<80205> .SPACER.....		EA		1	*	*	*			66	4
			5340-752-7501	NAS43DD4-9	<80205> .SPACER.....		EA		1	*	*	*			66	5
			3020-288-3411	MS20219A2	<96906> .PULLEY,GROOVE.....		EA		2	*	*	*		*	66	6
MF	F			S1630-61624-2	<78286> .GUIDE SUPPORT.....		EA		2						66	7
					MAKEFR											
					AR 9535-167-2279 AL ALLY SH											
X2	F			S1630-61623-4	<78286> .ANGLE.....		EA		1						66	8
			5315-597-1562	NAS427K9	<80205> .PIN,SPRING.....		EA		2	*	*	*		*	66	9
			5315-597-0643	NAS427K12	<80205> .PIN,SPRING.....		EA		1	2	2	4		*	66	10
			3020-277-1119	MS20219-4	<96906> .PULLEY,GROOVE.....		EA		1	*	*	*		*	66	11
					ATTACHING PARTS											
			5306-182-1960	AN4H12A	<88044> .BOLT,MACHINE.....		HD		1	*	*	*		*	66	12
			5310-187-2354	AN960PD416	<88044> .WASHER,FLAT.....		HD		2	*	*	*		*	66	
			5310-184-9001	AN960PD416L	<88044> .WASHER,FLAT.....		HD		2	*	*	*		*	66	

(1) SOURCE, MAINT AND REC CODE (a) SOURCE CODE	(b) MAINT LEVEL	(c) REC CODE	(2) FEDERAL STOCK NUMBER	REFERENCE NUMBER	(3) DESCRIPTION	MODELS USABLE ON CH-34C	(4) UNIT OF ISSUE	(5) QTY INC IN UNIT PACK	(6) QTY INC IN UNIT	(7) 30-DAY DS/GS MAINT ALW (a) 1-20	(b) 21-50	(c) 51-100	(8) 1-YR ALW PER 100 EQUIP CNTGCY	(9) DEPOT MAINT ALW PER 100 EQUIP	(10) ILLUSTRATION (a) FIG NO	(b) ITEM NO
			5310-543-4443	MS20364-428A <96906>	.NUT,SELF-LOCKING,HEXAGON....		HD		1	*	*	*		*	66	
					---*---											
MF	F			S1630-61624-1 <78286>	.GUIDE SUPPORT.....		EA		2						66	13
					MAKEFR											
					AR 9535-167-2279 AL ALLY SH											
X2	F			S1630-61623-1 <78286>	.ANGLE.....		EA		1						66	14
					ATTACHING PARTS											
				MS20470AD4 <96906>	.RIVET.....		EA		2						66	15
					---*---											
X2	F			S1630-61623-2 <78286>	.ANGLE.....		EA		1						66	17
				S1630-61602 <78286>	THROTTLE CONTROL PULLEY.....										67	
					BRACKET INSTALLATION USBL											
					EFF 55-4462 AND SUBSEQUENT											
					SEE FIG.56 FOR NHA											
P	F		1560-613-0969	S1630-61609-1 <78286>	.CAM,THROTTLE CONTROLS.....		EA		1	*	*	*		*	67	1
					RPLS-- 2915-560-5361											
					ATTACHING PARTS											
			5305-984-4976	MS35206-219 <96906>	.SCREW,MACHINE.....		HD		2	*	*	*		*	67	2
			5310-550-5009	MS15795-704 <96906>	.WASHER,FLAT.....		HD		8	*	*	*		*	67	
			5310-088-0551	MS21044N04 <96906>	.NUT,SELF-LOCKING,HEXAGON....		EA		2	*	*	*		*	67	
					---*---											
P	F		2995-560-5359	S1630-61606 <78286>	.LEVER,THROTTLE CONTROLS.....		EA		1	*	*	*		*	67	3
					ATTACHING PARTS											
			5306-182-2061	AN3H10A <88044>	.BOLT,MACHINE.....		HD		1	*	*	*		*	67	4
			5310-167-0753	AN960PD10L <88044>	.WASHER,FLAT.....		HD		2	*	*	*		*	67	
			5310-877-5797	MS21044N3 <96906>	.NUT,SELF-LOCKING,HEXAGON....		EA		1	*	*	*		*	67	
					---*---											
			5315-234-1856	MS24665-155 <96906>	.PIN,COTTER.....		HD		1	*	*	*		*	67	
			5305-984-4976	MS35206-219 <96906>	.SCREW,MACHINE.....		HD		2	*	*	*		*	67	5
			5310-550-5009	MS15795-704 <96906>	.WASHER,FLAT.....		HD		4	*	*	*		*	67	
			5310-088-0551	MS21044N04 <96906>	.NUT,SELF-LOCKING,HEXAGON....		EA		2	*	*	*		*	67	
P	F		5930-504-6855	JV5 <91929>	.ADAPTER,SWITCH,ACTUATOR.....		EA		1	*	*	*		REF	67	6
P	O		5930-833-5123	MS25253-2 <96906>	.SWITCH,SENSITIVE RPLS--....		EA		1	*	*	*		REF	67	7
					5930-548-7513											
MF	F			S1630-61643 <78286>	.GUARD,SWITCH.....		EA		1						67	8
					MAKEFR											
					AR 9515-235-7609 AL ALLY SH											
P	F		2995-560-5360	S1630-61608 <78286>	.CLIP,THROTTLE CONTROLS.....		EA		1	*	*	*		*	67	9
					ATTACHING PARTS											
			5306-182-2009	AN3H20A <88044>	.BOLT,MACHINE.....		HD		2	*	*	*		*	67	10
			5310-183-4406	AN960PD10 <88044>	.WASHER,FLAT.....		HD		4	*	*	*		*	67	
			5310-877-5797	MS21044N3 <96906>	.NUT,SELF-LOCKING,HEXAGON....		EA		2	*	*	*		*	67	
			5306-182-2017	AN4H6A <88044>	.BOLT,MACHINE.....		HD		1	*	*	*		*	67	11
			5310-184-9001	AN960PD416L <88044>	.WASHER,FLAT.....		HD		2	*	*	*		*	67	
			5310-543-4443	MS20364-428A <96906>	.NUT,SELF-LOCKING,HEXAGON....		HD		1	*	*	*		*	67	
					---*---											

(1) SOURCE, MAINT AND REC CODE (a) SOURCE CODE	(b) MAINT LEVEL	(c) REC CODE	(2) FEDERAL STOCK NUMBER	REFERENCE NUMBER		(3) DESCRIPTION	MODELS USABLE ON CH-34C	(4) UNIT OF ISSUE	(5) QTY INC IN UNIT PACK	(6) QTY INC IN UNIT	(7) 30-DAY DS/GS MAINT ALW (a) 1-20	(b) 21-50	(c) 51-100	(8) 1-YR ALW PER 100 EQUIP CNTGCY	(9) DEPOT MAINT ALW PER 100 EQUIP	(10) ILLUSTRATION (a) FIG NO	(b) ITEM NO
P	F		5340-560-5384	S1630-61638	<78286>	.CLAMP.....		EA		1	*	*	*		*	67	12
			5340-257-3765	AN486-2	<88044>	.CLEVIS,ROD END.....		EA		1	*	*	*		*	67	13
						ATTACHING PARTS											
			5306-182-2017	AN4H6A	<88044>	.BOLT,MACHINE.....		HD		1	*	*	*		*	67	14
			5310-167-0725	AN955-4	<88044>	.WASHER,CONVEX.....		HD		1	*	*	*		*	67	
						---*---											
AF	O			S1630-61603	<78286>	.PULLEY AND BRACKET.....		EA		1						67	15
						ATTACHING PARTS											
			5306-182-2006	AN3H15A	<88044>	.BOLT,MACHINE.....		EA		1	*	*	*		*	67	16
			5310-183-4406	AN960PD10	<88044>	.WASHER,FLAT.....		HD		2	*	*	*		*	67	
			5310-877-5797	MS21044N3	<96906>	.NUT,SELF-LOCKING,HEXAGON....		EA		1	*	*	*		*	67	
						---*---											
			5315-141-6356	NAS427K40	<80205>	..PIN,SPRING.....		EA		1	*	*	*		*	67	17
			3020-287-7919	MS20219-2	<96906>	..PULLEY,GROOVE.....		EA		2	*	*	REF		*	67	18
						ATTACHING PARTS											
			5306-182-1960	AN4H12A	<88044>	..BOLT,MACHINE.....		HD		2	*	*	*		*	67	19
			5310-187-2354	AN960PD416	<88044>	..WASHER,FLAT.....		HD		4	*	*	*		*	67	
			5310-184-9001	AN960PD416L	<88044>	..WASHER,FLAT.....		HD		4	*	*	*		*	67	
			5310-543-4443	MS20364-428A	<96906>	..NUT,SELF-LOCKING,HEXAGON...		HD		2	*	*	*		*	67	
						---*---											
P	O		1560-833-1632	S1630-61641-1	<78286>	..CLIP,BULKHEAD,THROTTLE.....		EA		1	*	*	*			67	20
						CONTROL											
P	O		2995-911-3706	S1630-61641-2	<78286>	..CLIP.....		EA		1	*	2	2		*	67	21
P	F		2995-560-5357	S1630-61604	<78286>	..PULLEY ASSEMBLY,THROTTLE...		EA		1	*	*	2		*	67	22
						CONTROLS											
X1				S1630-61604-1	<78286>	...PULLEY,GROOVE WHEN.....		EA		1						67	
						EXHTD RQTN NHA											
						1560-560-5357											
P	F		1560-613-0965	S1630-61605	<78286>	..PULLEY,BRACKET THROTTLE....		EA		1	*	*	*		*	67	23
						-ALTERNATE-											
P	F		1560-613-0965	S1630-61605-1	<78286>	..PULLEY,BRACKET THROTTLE....		EA		1	*	*	*		*	67	
AF	F			S1530-61136-4	<78286>	STRUT ASSEMBLY-SYNCHRONIZED..		EA								68	
						THROTTLE CONTROL SEE FIG.											
						55 FOR NHA											
AF	F			S1530-61136-3	<78286>	.ROD ASSEMBLY-PISTON.....		EA		1						68	1
						ATTACHING PARTS											
			5305-264-2220	AN503-8-4	<88044>	.SCREW,MACHINE.....		GR		2	*	*	*		*	68	2
			5310-184-8966	AN960PD8	<88044>	.WASHER,FLAT.....		HD		2	*	*	*		*	68	
						---*---											
			5310-167-0820	AN960-516	<88044>	..WASHER,FLAT.....		HD		1	*	*	*		*	68	3
			5310-167-1273	AN310D5	<88044>	..NUT,CASTELLATED,HEXAGON....		EA		1	*	*	*		*	68	
			5315-234-1856	MS24665-155	<96906>	..PIN,COTTER.....		HD		1	*	*	*		*	68	
P	F		1620-694-8565	S14-30-3150	<78286>	..PISTON,SYNCHRONIZER.....		EA		1	*	*	*		*	68	4
						THROTTLE											
			1560-320-6905	S14-30-3154	<78286>	..SPRING RPL-BY.....		EA			*	*	*			68	
						1560-336-0835											

(1) SOURCE, MAINT AND REC CODE (a) SOURCE CODE	(b) MAINT LEVEL	(c) REC CODE	(2) FEDERAL STOCK NUMBER	REFERENCE NUMBER	(3) DESCRIPTION	MODELS USABLE ON CH-34C	(4) UNIT OF ISSUE	(5) QTY INC IN UNIT PACK	(6) QTY INC IN UNIT	(7) 30-DAY DS GS MAINT ALW (a) 1-20	(b) 21-50	(c) 51-100	(8) 1 YR ALW PER 100 EQUIP CNTGCY	(9) DEPOT MAINT ALW PER 100 EQUIP	(10) ILLUSTRATION (a) FIG NO	(b) ITEM NO
P	F		1560-336-0835	S1630-61155	<78286> ..SPRING,HELICAL..... COMPRESSION RPLS-- 1560-320-6905		EA		1	*	*	*		*	68	5
P	F		1620-694-8565	S14-30-3150	<78286> ..PISTON,SYCHRONIZER..... THROTTLE		EA		1	*	*	*		REF	68	6
			5310-167-0821	AN960-616	<88044> ..WASHER,FLAT.....		HD		1	*	*	*		*	68	7
P	F		1560-570-0684	S14-30-3152	<78286> ..GUIDE,SYNCHRONIZER..... THROTTLE		EA		1	*	*	*		*	68	8
			5310-167-1300	AN316-6R	<88044> ..NUT,PLAIN,HEXAGON.....		HD		1	*	*	*		*	68	9
P	F		3110-159-1634	995-61004-0000	<96906> ..BEARING,ROLLER,ROD END.....		EA		1	*	*	*		*	68	10
P	F		1560-570-4870	S1630-61107	<78286> ..PISTON ROD.....		EA		1	*	*	*		*	68	11
AF	F			S1530-61136-4	<78286> .STRUT ASSEMBLY,ENGINE.....		EA		1						68	12
X2	F			S1530-61136-5	<78286> .HOUSING ASSEMBLY.....		EA		1						68	
			3110-709-8614	S1530-61136-6	<78286> ..ROD END RPL-BY..... 3110-198-1264		EA			*	*	*			68	
P	F		3110-198-1264	FR3-5	<77896> ..BEARING,ROLLER,ROD END..... RPLS-- 3110-709-8614		EA		1	*	*	*		REF	68	13
				S1630-61088	<78286> THROTTLE CONTROL PULLEY..... INSTALLATION USBL EFF 53-4475 THRU 54-3050 SEE FIG.55 FOR NHA										69	
AF	F			S1630-61088-1	<78286> .PULLEY ASSEMBLY.....		EA		1						69	1
			3020-287-7919	MS20219-2	<96906> ..PULLEY,GROOVE..... ATTACHING PARTS		EA		1	*	*	REF		*	69	2
			5306-558-9467	AN4H32A	<88044> ..BOLT,MACHINE.....		EA		1	*	*	*		*	69	3
			5310-187-2354	AN960PD416	<88044> ..WASHER,FLAT.....		HD		2	*	*	*		*	69	
			5310-877-5796	MS21044N4	<96906> ..NUT,SELF-LOCKING,HEXAGON...		EA		1	*	*	*		*	69	
					---*---											
			5315-081-7026	MS20392-2C83	<96906> ..PIN,STRAIGHT,HEADED.....		EA		2	*	*	*		*	69	6
			5310-183-4406	AN960PD10	<88044> ..WASHER,FLAT.....		HD		4	*	*	*		*	69	
			5315-234-1851	MS24665-24	<96906> ..PIN,COTTER.....				2	*	*	*		*	69	
			5310-316-8956	AN316-4R	<88044> ..NUT.....		HD		4	*	*	*		*	69	8
P	F		1560-570-4853	S1530-80746	<78286> ..BLOCK,ENGINE CONTROLS.....		EA		2						69	9
			5306-182-2060	AN3H7A	<88044> ..BOLT,MACHINE.....		HD		4	*	*	*		*	69	10
			5310-183-4406	AN960PD10	<88044> ..WASHER,FLAT.....		HD		8	*	*	*		*	69	
			5310-877-5797	MS21044N3	<96906> ..NUT,SELF-LOCKING,HEXAGON...		EA		4	*	*	*		*	69	
P	F		1560-339-9570	S1630-61089	<78286> ..PULLEY ASSEMBLY..... ATTACHING PARTS		EA		1	*	*	*		*	69	12
			5306-558-9467	AN4H32A	<88044> ..BOLT,MACHINE.....		EA		1	*	*	*		*	69	13
			5310-187-2354	AN960PD416	<88044> ..WASHER,FLAT.....		HD		2	*	*	*		*	69	
			5310-877-5796	MS21044N4	<96906> ..NUT,SELF-LOCKING,HEXAGON...		EA		1	*	*	*		*	69	
					---*---											
P	F		3110-142-4456	AN201KP4A	<88044> ...BEARING,BALL,AIRFRAME.....		EA		2	*	*	*		REF	69	14
P	F		1560-570-4869	S1630-61089-2	<78286> ...PULLEY,GROOVED.....		EA		1	*	*	*		*	69	16
MF	F			S1630-61088-10	<78286> .DOUBLER.....		EA		1						69	19

(1) SOURCE, MAINT AND REC CODE (a) RAC	(b) NAVY	(c) AF	(2) FEDERAL STOCK NUMBER	REFERENCE NUMBER		(3) DESCRIPTION	MODELS USABLE ON CH-34C	(4) UNIT OF ISSUE	(5) QTY INC IN UNIT PACK	(6) QTY INC IN UNIT	(7) 30-DAY DS GS MAINT ALW (a) 1-20	(b) 21-50	(c) 51-100	(8) 1-YR ALW PER 100 EQUIP CNTGCY	(9) DEPOT MAINT ALW PER 100 EQUIP	(10) ILLUSTRATION (a) FIG NO	(b) ITEM NO
						CONTINUED										69	19
						MAKEFR											
						AR 9535-232-0378 AL ALLY SH											
						ATTACHING PARTS											
				MS20470AD4	<96906>	.RIVET.....		EA		8						69	20
						---*---											
				S1630-61022	<78286>	THROTTLE SYNCHRONIZER.....										70	
						INSTALLATION USBL EFF											
						53-4475 THRU 54-3050 SEE											
						FIG.55 FOR NHA											
AF	F			S1630-61022-1	<78286>	.SYNCHRONIZER ASSEMBLY.....		EA		1						70	1
						ATTACHING PARTS											
			5306-206-6281	AN3DDH3A	<88044>	.BOLT,MACHINE.....		EA		4	*	*	*		*	70	2
			5310-167-0753	AN960PD10L	<88044>	.WASHER,FLAT.....		HD		8	*	*	*		*	70	
			5310-905-3081	MS21083D3	<96906>	.NUT,SELF-LOCKING,HEXAGON....				4	*	*	*		*	70	
			5306-182-2058	AN3H5A	<88044>	.BOLT,MACHINE.....		EA		4	*	*	*		*	70	3
			5310-167-0753	AN960PD10L	<88044>	.WASHER,FLAT.....		HD		8	*	*	*		*	70	
			5310-807-1467	MS21042-3	<96906>	.NUT,EXTENDED WASHER.....				4	*	*	*		*	70	
						---*---											
			5306-576-7739	AN4H36A	<88044>	..BOLT,MACHINE.....		EA		1	*	*	*		*	70	4
			5310-184-9001	AN960PD416L	<88044>	..WASHER,FLAT.....		HD		2	*	*	*		*	70	
			5310-543-4443	MS20364-428A	<96906>	..NUT,SELF-LOCKING,HEXAGON...		HD		1	*	*	*		*	70	
			5340-413-1977	NAS43-4-53	<80205>	..SPACER,SLEEVE.....		EA		1	*	*	*		*	70	7
			5306-576-7739	AN4H36A	<88044>	..BOLT,MACHINE.....		EA		1	*	*	*		*	70	8
			5310-184-9001	AN960PD416L	<88044>	..WASHER,FLAT.....		HD		2	*	*	*		*	70	
			5310-543-4443	MS20364-428A	<96906>	..NUT,SELF-LOCKING,HEXAGON...		HD		1	*	*	*		*	70	
			5340-709-8281	NAS43HTH-208	<80205>	..SPACER,SLEEVE.....		EA		1	*	*	*		*	70	9
P	F		2995-336-0382	S14-30-3469	<78286>	..LEVER,REMOTE CONTROL.....		EA		1	*	*	*		*	70	10
						ATTACHING PARTS											
			5315-198-8091	AN386-1-6A	<88044>	..PIN,TAPERED,THREADED.....		EA		1	*	*	*		*	70	11
			5310-167-0685	AN975-3	<88044>	..WASHER,RECESSED.....		HD		1	*	*	*		*	70	
			5310-807-1467	MS21042-3	<96906>	..NUT,EXTENDED WASHER.....				1	*	*	*		*	70	
						---*---											
			5310-141-1795	AN960-416	<88044>	..WASHER,FLAT.....		HD		1	*	*	*		*	70	12
			5310-543-4443	MS20364-428A	<96906>	..NUT,SELF-LOCKING,HEXAGON...		HD		1	*	*	*		*	70	
X2	F			S1630-61105-2	<78286>	..FRAME ASSEMBLY,.....		EA		1						70	
						SYNCHRONIZER-RH											
P	F		1560-699-4340	S14-30-3468	<78286>	...BEARING ASSEMBLY,.....		EA		1	*	*	*		*	70	14
						SYNCHRONIZER											
			5310-167-0836	AN960-516L	<88044>	..WASHER,FLAT.....		HD		1	*	*	*		*	70	16
			5306-182-2018	AN4H24A	<88044>	..BOLT,MACHINE.....		HD		1	*	*	*		*	70	17
			5310-184-9001	AN960PD416L	<88044>	..WASHER,FLAT.....		HD		1	*	*	*		*	70	
			5310-141-1795	AN960-416	<88044>	..WASHER,FLAT.....		HD		1	*	*	*		*	70	
			5310-543-4443	MS20364-428A	<96906>	..NUT,SELF-LOCKING,HEXAGON...		HD		1	*	*	*		*	70	
P	F		1560-334-6351	S1630-61104	<78286>	..BELLCRANK ASSEMBLY.....		EA		1	*	*	*		*	70	18
P	F		2995-327-3891	S1630-61103	<78286>	..LEVER ASSEMBLY,CAM.....		EA		2	*	*	*		*	70	19

(1) SOURCE, MAINT AND REC CODE (a) SOURCE CODE	(b) MAINT LEVEL	(c) REC CODE	(2) FEDERAL STOCK NUMBER	REFERENCE NUMBER	(3) DESCRIPTION	MODELS USABLE ON CH-34C	(4) UNIT OF ISSUE	(5) QTY INC IN UNIT PACK	(6) QTY INC IN UNIT	(7) 30-DAY DS/GS MAINT ALW (a) 1-20	(b) 21-50	(c) 51-100	(8) 1-YR ALW PER 100 EQUIP CNTGCY	(9) DEPOT MAINT ALW PER 100 EQUIP	(10) ILLUSTRATION (a) FIG NO	(b) ITEM NO
					CONTINUED										70	19
					FOLLOWER											
P	F		3110-142-4464	MS20201KP5A <96906>	..BEARING,BALL,AIRFRAME.....		EA		2	*	*	*		*	70	20
X2	F		1560-516-1276	S14-30-3463 <78286>	..BEARING,SLEEVE.....		EA		1	*	*	*		*	70	21
P	F		1560-662-7499	S14-30-3471 <78286>	..BEARING,SLEEVE.....		EA		1	*	*	*		*	70	22
AF	F			S1630-61023 <78286>	..CAM ASSEMBLY.....		EA		1						70	23
			5306-551-6996	AN3DDH12A <88044>	...BOLT,MACHINE.....		EA		2	*	*	*		*	70	24
			5310-167-0753	AN960PD10L <88044>	...WASHER,FLAT.....		HD		4	*	*	*		*	70	
			5310-905-3081	MS21083D3 <96906>	...NUT,SELF-LOCKING,HEXAGON..				2	*	*	*		*	70	
MF	F			NAS43DD3-40 <80205>	...SPACER,SLEEVE.....		EA		2						70	25
					MAKEFR											
					2 EA 5340-727-1891 SPACER											
P	F		1560-336-0853	S1630-61157 <78286>	...CAM,THROTTLE.....		EA		2	*	*	*		*	70	26
					SYNCHRONIZER RPLS--											
					1560-091-4000											
					ATTACHING PARTS											
			5305-273-5348	AN525-832R20 <88044>	...SCREW,MACHINE.....		GR		5	*	*	*		*	70	27
			5310-184-8966	AN960PD8 <88044>	...WASHER,FLAT.....		HD		10	*	*	*		*	70	
			5310-807-1466	MS21042-08 <96906>	...NUT,EXTENDED WASHER.....				5	*	*	*		*	70	
					---*---											
P	F		1560-301-8410	S14-30-3461 <78286>	...SHAFT,POWER PLANT,ENGINE..		EA		1	*	*	*		*	70	29
					CONTROLS											
MF	F			S1630-61022-2 <78286>	.BRACE.....		EA		1						70	30
					MAKEFR											
					AR 9535-554-1412 AL ALLY SH											
					ATTACHING PARTS											
			5306-206-6281	AN3DDH3A <88044>	.BOLT,MACHINE.....		EA		2	*	*	*		*	70	31
			5310-167-0753	AN960PD10L <88044>	.WASHER,FLAT.....		HD		4	*	*	*		*	70	
			5310-905-3081	MS21083D3 <96906>	.NUT,SELF-LOCKING,HEXAGON....				2	*	*	*		*	70	
					---*---											
				S1630-61092 <78286>	SERVO ACTUATING TORQUE TUBE..										71	
					INSTALLATION USBL EFF											
					53-4475 THRU 54-3050 SEE											
					FIG.55 FOR NHA											
P	F		1560-570-0632	S1630-61092-1 <78286>	.BRACKET ASSEMBLY,SERVO.....		EA		1	*	*	*		*	71	1
					ACTUATING											
					ATTACHING PARTS											
			5306-182-2058	AN3H5A <88044>	.BOLT,MACHINE.....		EA		2	*	*	*		*	71	2
			5310-167-0753	AN960PD10L <88044>	.WASHER,FLAT.....		HD		4	*	*	*		*	71	
			5310-807-1467	MS21042-3 <96906>	.NUT,EXTENDED WASHER.....				2	*	*	*		*	71	
			5310-187-2354	AN960PD416 <88044>	.WASHER,FLAT.....		HD		1	*	*	*		*	71	3
			5310-543-4443	MS20364-428A <96906>	.NUT,SELF-LOCKING,HEXAGON....		HD		1	*	*	*		*	71	
					---*---											
AF	F			S1630-61092-3 <78286>	.TUBE ASSEMBLY-TORQUE.....		EA		1						71	4
					ATTACHING PARTS											
			5310-187-2354	AN960PD416 <88044>	.WASHER,FLAT.....		HD		1	*	*	*		*	71	5

(1) SOURCE, MAINT AND REC CODE (a) SOURCE CODE	(b) MAINT LEVEL	(c) REC CODE	(2) FEDERAL STOCK NUMBER	REFERENCE NUMBER	(3) DESCRIPTION	MODELS USABLE ON CH-34C	(4) UNIT OF ISSUE	(5) QTY INC IN UNIT PACK	(6) QTY INC IN UNIT	(7) 30-DAY DS GS MAINT ALW (a) 1-20	(b) 21-50	(c) 51-100	(8) 1-YR ALW PER 100 EQUIP CNTGCY	(9) DEPOT MAINT ALW PER 100 EQUIP	(10) ILLUSTRATION (a) FIG NO	(b) ITEM NO
			5310-543-4443	MS20364-428A <96906>	.NUT,SELF-LOCKING,HEXAGON.... ---*---		HD		1	*	*	*		*	71	
			1560-327-3892	S1630-61106 <78286>	..LEVER,TORQUE TUBE..... RPL-BY 1560-330-6169										71	
P	F		1560-330-6169	S1630-61194 <78286>	..THROTTLE,LEVER SERVO..... ACTUATING RPLS-- 1560-327-3892 ATTACHING PARTS		EA		1	*	*	*		*	71	6
			5315-198-8093	AN386-1-7A <88044>	..PIN,TAPERED,THREADED.....		EA		1	*	*	*		*	71	7
			5310-167-0685	AN975-3 <88044>	..WASHER,FLAT.....		HD		1	*	*	*		*	71	
			5310-807-1467	MS21042-3 <96906>	..NUT,EXTENDED WASHER..... ---*---				1	*	*	*		*	71	
			1560-327-3881	S1630-61011 <78286>	..LEVER,TORQUE TUBE RPL-BY.. 1560-330-6171										71	
P	F		1560-330-6171	S1630-61197 <78286>	..LEVER,TORQUE TUBE RPLS--.. 1560-327-3881 ATTACHING PARTS		EA		1	*	*	*		REF	71	8
			5315-198-8093	AN386-1-7A <88044>	..PIN,TAPERED,THREADED.....		EA		1	*	*	*		*	71	9
			5310-167-0685	AN975-3 <88044>	..WASHER,RECESSED.....		HD		1	*	*	*		*	71	
			5310-807-1467	MS21042-3 <96906>	..NUT,EXTENDED WASHER..... ---*---				1	*	*	*		*	71	
P	F		2995-327-3888	S1630-61091 <78286>	..TORQUE TUBE ASSEMBLY.....		EA		1	*	*	*		*	71	10
P	F		1560-589-8444	S1630-61090-3 <78286>	.SUPPORT ASSEMBLY,TORQUE..... TUBE ATTACHING PARTS		EA		1	*	*	*		*	71	11
			5306-182-2059	AN3H6A <88044>	.BOLT,MACHINE.....		HD		2	*	*	*		*	71	12
			5310-167-0753	AN960PD10L <88044>	.WASHER,FLAT.....		HD		4	*	*	*		*	71	
			5310-807-1467	MS21042-3 <96906>	.NUT,EXTENDED WASHER..... ---*---				2	*	*	*		*	71	
P	F		3110-142-4456	AN201KP4A <88044>	..BEARING,BALL,AIRFRAME.....		EA		1	*	*	*		REF	71	13
				S1630-61120 <78286>	THROTTLE CONTROL TORQUE..... TUBE INSTALLATION USBL EFF 53-4475 THRU 54-3050 SEE FIG.55 FOR NHA										72	
			5306-182-1958	AN4H10A <88044>	.BOLT,MACHINE.....		HD		4	*	*	*		*	72	1
			5310-184-9001	AN960PD416L <88044>	.WASHER,FLAT.....		HD		8	*	*	*		*	72	
			5310-543-4443	MS20364-428A <96906>	.NUT,SELF-LOCKING,HEXAGON....		HD		4	*	*	*		*	72	
			5315-198-8093	AN386-1-7A <88044>	.PIN,TAPERED,THREADED.....		EA		1	*	*	*		*	72	2
			5310-167-0685	AN975-3 <88044>	.WASHER,FLAT.....		HD		1	*	*	*		*	72	
			5310-807-1467	MS21042-3 <96906>	.NUT,EXTENDED WASHER.....				1	*	*	*		*	72	
			1560-327-3889	S1630-61098 <78286>	.LEVER,THROTTLE CONTROL..... RPL-BY 1560-340-0288										72	
P	F		1560-340-0288	S1630-61195 <78286>	.LEVER,THROTTLE CONTROL..... RPLS-- 1560-327-3889		EA		1	*	*	*		*	72	3
P	F		3110-142-4472	AN201KP8A <88044>	..BEARING,BALL,AIRFRAME..... ATTACHING PARTS		EA		2	*	*	*		*	72	5

(1) SOURCE, MAINT AND REC CODE (a) SOURCE CODE	(b) MAINT LEVEL	(c) REC CODE	(2) FEDERAL STOCK NUMBER	REFERENCE NUMBER		(3) DESCRIPTION	MODELS USABLE ON CH-34C	(4) UNIT OF ISSUE	(5) QTY INC IN UNIT PACK	(6) QTY INC IN UNIT	(7) 30-DAY DS GS MAINT ALW (a) 1-20	(b) 21-50	(c) 51-100	(8) 1 YR ALW PER 100 EQUIP CNTGCY	(9) DEPOT MAINT ALW PER 100 EQUIP	(10) ILLUSTRATION (a) FIG NO	(b) ITEM NO
			5340-801-2500	MS16625-1112	<96906>	..RING,RETAINING.....		EA		2	*	*	*		*	72	6
						---*---											
			1560-323-4283	S1630-61125	<78286>	.LEVER ASSEMBLY.....		EA								72	7
						OBS-AFT-CMPL-W											
						TM1-1H-34A-573											
			5305-150-9213	AN502-10-6	<88044>	.SCREW,MACHINE.....		HD		3	*	*	*		*	72	8
			5310-167-0753	AN960PD10L	<88044>	.WASHER,FLAT.....		HD		3	*	*	*		*	72	
P	F		3110-142-4472	AN201KP8A	<88044>	..BEARING,BALL,AIRFRAME.....		EA		1	*	*	*		REF	72	9
			5305-150-9213	AN502-10-6	<88044>	.SCREW,MACHINE.....		HD		3	*	*	*		*	72	11
			5310-167-0753	AN960PD10L	<88044>	.WASHER,FLAT.....		HD		3	*	*	*		*	72	
						---*---											
P	F		1560-505-8496	S1630-61122-4	<78286>	.COUPLING,THROTTLE CONTROLS..		EA		1	*	*	*		*	72	
P	F		1560-693-8826	S1630-61122-3	<78286>	.COUPLING,TUBE.....		EA		1	*	*	*		*	72	14
						ATTACHING PARTS											
			5305-989-7435	MS35207-264	<96906>	.SCREW,MACHINE.....		HD		1	*	*	*		*	72	15
			5315-234-1856	MS24665-155	<96906>	.PIN,COTTER.....		HD		1	*	*	*		*	72	
						---*---											
P	F		1560-565-5608	S1630-61123	<78286>	.SHAFT ASSEMBLY,THROTTLE.....		EA		1	*	*	*		*	72	16
						CONTROL											
			1560-327-3893	S1630-61121	<78286>	.ADAPTER,TORQUE TUBE.....		EA								72	17
						THROTTLE CONTROLS											
			5306-182-2059	AN3H6A	<88044>	.BOLT,MACHINE.....		HD		1	*	*	*		*	72	18
			5310-167-0818	AN960-10	<88044>	.WASHER,FLAT.....		HD		1	*	*	*		*	72	
			1620-775-5970	S1630-61618	<78286>	THROTTLE CONTROL TORQUE.....		EA			*	*	*			73	
						TUBE INSTALLATION USBL EFF											
						55-4462 AND SUBSEQUENT SEE											
						FIG.56 FOR NHA											
P	F		1560-589-8444	S1630-61090-3	<78286>	.SUPPORT ASSEMBLY,SERVO.....		EA		2	*	*	*		*	73	1
						ACTUATOR											
						ATTACHING PARTS											
			5306-182-2059	AN3H6A	<88044>	.BOLT,MACHINE.....		HD		2	*	*	*		*	73	2
			5310-183-4406	AN960PD10	<88044>	.WASHER,FLAT.....		HD		4	*	*	*		*	73	
			5310-877-5797	MS21044N3	<96906>	.NUT,SELF-LOCKING,HEXAGON....		EA		2	*	*	*		*	73	
			5306-156-2537	AN174H12A	<88044>	.BOLT,MACHINE.....		EA		1	*	*	*		*	73	3
			5310-187-2354	AN960PD416	<88044>	.WASHER,FLAT.....		HD		1	*	*	*		*	73	
P	F		5310-527-3648	2452-048	<72962>	.NUT,SELF-LOCKING,BARREL.....		EA		1	*	*	*		*	73	
			5306-292-8285	AN174H10A	<88044>	.BOLT,MACHINE.....		EA		1	*	*	*		*	73	4
			5310-187-2354	AN960PD416	<88044>	.WASHER,FLAT.....		HD		1	*	*	*		*	73	
P	F		5310-527-3648	2452-048	<72962>	.NUT,SELF-LOCKING,BARREL.....		EA		1	*	*	*		REF	73	
						---*---											
P	F		3110-142-4456	AN201KP4A	<88044>	..BEARING,BALL,AIRFRAME.....		EA		1	*	*	*		REF	73	5
AF	F			S1630-61618-1	<78286>	.SHAFT ASSEMBLY,TORQUE.....		EA		1						73	6
P	F		2995-560-5367	S1630-61620	<78286>	..LEVER,THROTTLE CONTROLS....		EA		1	*	*	*		*	73	7
						ATTACHING PARTS											
			5315-198-8114	AN386-2-14A	<88044>	..PIN,TAPERED,THREADED.....		EA		1	*	*	*		*	73	8
			5310-807-1467	MS21042-3	<96906>	..NUT,SELF-LOCKING,HEXAGON...				1	*	*	*		*	73	

(1) SOURCE MAINT AND REC CODE (a)	(b)	(c)	(2) FEDERAL STOCK NUMBER	(3) DESCRIPTION REFERENCE NUMBER			MODELS USABLE ON CH-34C	(4) UNIT OF ISSUE	(5) QTY INC IN UNIT PACK	(6) QTY INC IN UNIT	(7) 30 DAY DS GS MAINT ALW (a) 1-20	(b) 21-50	(c) 51-100	(8) 1-YR ALW PER 100 EQUIP CNTGCY	(9) DEPOT MAINT ALW PER 100 EQUIP	(10) ILLUSTRATION (a) FIG NO	(b) ITEM NO
						CONTINUED										73	
						---*---											
P	F		2995-560-5366	S1630-61619	<78286>	..LEVER,THROTTLE CONTROLS.... ATTACHING PARTS		EA		1	*	*	*		*	73	9
			5315-198-8114	AN386-2-14A	<88044>	..PIN,TAPERED,THREADED.....		EA		1	*	*	*		*	73	10
				AN975-2	<88044>	..WASHER,RECESSED.....		EA		1						73	
			5310-807-1467	MS21042-3	<96906>	..NUT,EXTENDED WASHER.....				1	*	*	*		*	73	
						---*---											
P	F		2915-560-5365	S1630-61618-2	<78286>	..TUBE,TORQUE,THROTTLE..... CONTROLS		EA		1	*	*	*		*	73	11
				S1630-63000-3	<78286>	LUBRICATION SYSTEM..... USBL EFF 53-4475 THRU 56-4312 SEE FIG.40 FOR NHA										74	
			1560-570-0649	S1630-63025-5	<78286>	.HOSE ASSEMBLY,VENT OIL..... RPL-BY 4720-682-2349										74	
				4720EG007-16Z0250	<81996>	.HOSE ASSEMBLY,..... TETRAFLUOROETHYLENE RPLS-- 1560-570-0649		EA		1						74	1
			1560-627-2114	S1630-63026-13	<78286>	.TUBE,VENT INTERCONNECT..... OBS-AFT-CMPL-W MWO 55-1520-202-34/16		EA								74	2
P	O		1560-946-2146	S1630-63000-8	<78286>	.TUBE ASSEMBLY,FUSELAGE.....		EA		1	*	*	*		*	74	3
			1560-611-2531	S1630-63026-17	<78286>	.TUBE ASSEMBLY..... OBS-AFT-CMPL-W MWO 55-1520-202-34/6		EA								74	4
			4730-287-0271	AN818-20D	<88044>	..NUT,TUBE COUPLING.....		EA		2	*	*	*		*	74	5
			4730-287-0064	AN819-20D	<88044>	..SLEEVE,FLARED TUBE FITTING.		EA		2	*	*	*		*	74	6
			1560-626-7275	S1630-63026-2	<78286>	..TUBE ASSEMBLY RPL-BY..... PN S1630-63026-18										74	
X1				S1630-63026-18	<78286>	..TUBE ASSEMBLY RPLS--..... 1560-626-7275		EA		1						74	7
			5310-208-4134	MS24400D24	<96906>	.NUT,PLAIN,HEXAGON.....		EA		1	*	*	*		*	74	8
			5330-816-3546	MS28778-20	<96906>	.PACKING,PREFORMED.....		EA		1	2	5	10		*	74	
			4730-197-2921	MS24394D20	<96906>	.ELBOW,TUBE.....		EA		1	*	*	*		*	74	
			4730-585-8529	MS20762D20	<96906>	.ELBOW,TUBE.....		EA		1	*	*	*		*	74	9
			4730-289-0788	AN756D20	<88044>	.FLANGE,PIPE,SWIVEL RETAINING ATTACHING PARTS		EA		1	*	*	*		*	74	10
			5310-184-9001	AN960PD416L	<88044>	.WASHER,FLAT.....		HD		4	*	*	*		*	74	11
			5310-877-5796	MS21044N4	<96906>	.NUT,SELF-LOCKING,HEXAGON....		EA		4	*	*	*		*	74	
						---*---											
			5330-599-1319	AN763-20	<88044>	.GASKET.....		EA		1	*	*	*		*	74	12
P	F		1560-332-3530	S1630-63004	<78286>	.TUBE ASSEMBLY,LUBRICATION... PORT		EA		1	*	*	*		*	74	13
P	F		2935-028-0228	K1480B	<75361>	.COCK,DRAIN RPLS--..... 4820-654-1523		EA		1	*	*	*		*	74	14
			4730-585-8769	AN929A6	<88044>	.CAP,TUBE.....		EA		1	*	*	*		*	74	15

(1) SOURCE, MAINT AND REC CODE (a) SOURCE CODE	(b) MAINT LEVEL	(c) REC CODE	(2) FEDERAL STOCK NUMBER	REFERENCE NUMBER		(3) DESCRIPTION	MODELS USABLE ON CH-34C	(4) UNIT OF ISSUE	(5) QTY INC IN UNIT PACK	(6) QTY INC IN UNIT	(7) 30-DAY DS GS MAINT ALW (a) 1-20	(b) 21 50	(c) 51 100	(8) 1-YR ALW PER 100 EQUIP CNTGCY	(9) DEPOT MAINT ALW PER 100 EQUIP	(10) ILLUSTRATION (a) FIG NO	(b) ITEM NO
			4730-684-6916	MS24392D6	<96906>	.NIPPLE,TUBE.....		EA		1	8	20	40	480	*	74	16
			5330-804-5695	MS28778-6	<96906>	.PACKING,PREFORMED.....		EA		1	REF	REF	REF		*	74	
			1560-332-3535	S1630-63032	<78286>	.HOUSING,OIL CHECK VALVE..... RPL-BY 1560-625-9363										74	
			1560-563-9911	S1630-63032-2	<78286>	.HOUSING,OIL CHECK VALVE..... RPL-BY 1560-625-9363										74	
P	F		1560-625-9363	S1630-63040-2	<78286>	.HOUSING,OIL CHECK VALVE..... RPLS-- 1560-332-3535, 1560-563-9911,& 1560-575-2039 ATTACHING PARTS		EA		1	*	*	*		*	74	17
			5306-180-2752	AN5H13	<88044>	.BOLT,MACHINE.....		HD		4	*	*	*		*	74	18
			5310-187-2399	AN960PD516	<88044>	.WASHER,FLAT.....		HD		8	*	*	*		*	74	
			5310-088-0553	MS21044N5	<96906>	.NUT,SELF-LOCKING,HEXAGON.... ---*---		HD		4	*	*	*		*	74	
			1560-663-7068	S1630-63027	<78286>	.GASKET RPL-BY 2995-576-8110										74	
P	F		2995-576-8110	S1630-63027-1	<78286>	.GASKET-CHECK,VALVE SEAL..... RPLS-- 1560-663-7068		EA		2	2	2	4		*	74	19
P	F		2995-945-2160	S1630-63057-1	<96772>	.VALVE,ELEMENT,SWING.....		EA		1	*	*	*		*	74	20
P	F		1560-633-6474	S1630-63039	<78286>	.FITTING ASSEMBLY..... INTERMEDIATE OIL OUTLINE RPLS-- 1560-332-3534, 1560-336-0886 ATTACHING PARTS		EA		1	*	*	*		*	74	21
			5310-141-1795	AN960-416	<88044>	.WASHER,FLAT.....		HD		4	*	*	*		*	74	22
			5310-877-5796	MS21044N4	<96906>	.NUT,SELF-LOCKING,HEXAGON....		EA		4	*	*	*		*	74	
			5330-171-6945	AN763-24	<88044>	.GASKET.....		EA		1	44	111	222		*	74	23
			1560-336-0875	S1630-63018	<78286>	.TUBE ASSEMBLY RPL-BY..... 1560-613-0952										74	
P	F		1560-613-0952	S1630-63042	<78286>	.TUBE ASSEMBLY RPLS--..... 1560-336-0875		EA		1	*	*	2		*	74	24
				S1630-63003-5	<78286>	.OIL CELL INSTALLATION SEE.. FIG.76 FOR BREAKDOWN				1						74	25
				S1630-63034-1	<78286>	.OIL COOLER AND DUCT..... INSTALLATION				1						74	26
			5305-558-8934	AN525D10R8	<88044>	..SCREW,MACHINE.....		HD		6	*	*	*		*	74	27
			1560-693-8819	S1630-63048-1	<78286>	..DUCT ASSEMBLY,OIL COOLER... RPL-BY 1560-571-6229		EA			*	*	*			74	
P	F		1560-571-6229	S1630-63048-40	<78286>	..DUCT ASSEMBLY..... RPLS-- 1560-693-8819		EA		1	*	*	*		*	74	31
			1560-563-9921	S1630-63048-2	<78286>	..DUCT ASSEMBLY,OIL COOLER... RPL-BY 1560-572-8283										74	
P	F		1560-572-8283	S1630-63048-41	<78286>	..DUCT ASSEMBLY,OIL COOLER... RPLS-- 1560-563-9921		EA		1	*	*	*		*	74	

(1) SOURCE, MAINT AND REC CODE (a) SOURCE CODE	(b) MAINT CODE	(c) REC CODE	(2) FEDERAL STOCK NUMBER	(3) DESCRIPTION REFERENCE NUMBER			MODELS USABLE ON CH-34C	(4) UNIT OF ISSUE	(5) QTY INC IN UNIT PACK	(6) QTY INC IN UNIT	(7) 30-DAY DS GS MAINT ALW (a) 1-20	(b) 21-50	(c) 51-100	(8) 1-YR ALW PER 100 EQUIP CNTGCY	(9) DEPOT MAINT ALW PER 100 EQUIP	(10) ILLUSTRATION (a) FIG NO	(b) ITEM NO
			5310-728-7711	MS21081-3	<80205>	...NUT,SELF-LOCKING,PLATE.... NOTE 1		EA		2	*	*	*		*	74	32
MF	F			S1630-63048-5	<78286>	...ANGLE.....NOTE 1 MAKEFR AR 9535-554-1415 AL ALLY SH		EA		1						74	34
			5310-728-5510	MS21078-3	<96906>	...NUT,SELF-LOCKING,PLATE.... NOTE 1		EA		3	*	*	*		*	74	37
MF	F			S1630-63048-11	<78286>	...ANGLE.....NOTE 1 MAKEFR AR 9535-554-1412 AL ALLY SH		EA		1						74	38
MF	F			S1630-63048-7	<78286>	...DOUBLER.....NOTE 2 MAKEFR AR 9535-554-1412 AL ALLY SH		EA		1						74	41
MF	F			S1630-63048-12	<78286>	...ANGLE.....NOTE 2 MAKEFR AR 9535-554-1412 AL ALLY SH		EA		1						74	42
				MS20470AD4	<96906>	...RIVET.....NOTE 2		EA		6						74	43
MF	F			S1630-63048-6	<78286>	...ANGLE.....NOTE 2 MAKEFR AR 9535-554-1415 AL ALLY SH		EA		1						74	45
				MS20470AD4	<96906>	...RIVET.....		EA		56						74	46
MF	F			S1630-63048-37	<78286>	...STRIP..... MAKEFR AR 9535-554-1412 AL ALLY SH		EA		1						74	47
P	F		1560-624-9998	S1630-63048-36	<78286>	...SEAL,UPPER.....		EA		1	*	2	2		*	74	48
MF	F			S1630-63048-29	<78286>	...STRIP.....NOTE 1 MAKEFR AR 9535-554-1412 AL ALLY SH		EA		2						74	49
MF	F			S1630-63048-32	<78286>	...STRIP.....NOTE 2 MAKEFR AR 9535-167-2279 AL ALLY SH		EA		2						74	
P	F		1560-625-4523	S1630-63048-27	<78286>	...SEAL,UPPER OIL COOLER.....		EA		1	*	2	2		*	74	50
MF	F			S1630-63048-28	<78286>	...SEAL..... MAKEFR AR 9535-554-1415 AL ALLY SH		EA		1						74	
P	F		1560-625-0000	S1630-63048-38	<78286>	...SEAL.....		EA		1	*	2	2		*	74	51
P	F		1560-632-0983	S1630-63048-39	<78286>	...SEAL,LOWER OIL COOLER.....		EA		1	*	2	2		*	74	
MF	F			S1630-63048-9	<78286>	...SEAL.....NOTE 1 MAKEFR AR 9320-241-9740 RBR SH,SLD		EA		1						74	52
MF	F			S1630-63048-10	<78286>	...SEAL.....NOTE 1 MAKEFR AR 9320-241-9742 RBR SH,SLD		EA		1						74	53
				MS20470AD4	<96906>	...RIVET.....		EA		20						74	54
MF	F			S1630-63048-31	<78286>	...STRIP..... MAKEFR AR 9535-167-2279 AL ALLY SH		EA		1						74	55
X2	F		1560-632-0982	S1630-63048-25	<78286>	...SEAL-LOWER,OIL COOLER.....		EA		1	*	*	*		*	74	56
MF	F			S1630-63048-30	<78286>	...STRIP..... MAKEFR AR 9535-167-2279 AL ALLY SH		EA		2						74	57
P	F		1560-624-9997	S1630-63048-35	<78286>	...SEAL.....NOTE 1		EA		2	*	2	2		*	74	58

(1) SOURCE, MAINT AND REC CODE (a) SOURCE CODE	(b) MAINT LEVEL	(c) REC CODE	(2) FEDERAL STOCK NUMBER	REFERENCE NUMBER	(3) DESCRIPTION	MODELS USABLE ON CH-34C	(4) UNIT OF ISSUE	(5) QTY INC IN UNIT PACK	(6) QTY INC IN UNIT	(7) 30-DAY DS GS MAINT ALW (a) 1-20	(b) 21-50	(c) 51-100	(8) 1-YR ALW PER 100 EQUIP CHTGCY	(9) DEPOT MAINT ALW PER 100 EQUIP	(10) ILLUSTRATION (a) FIG NO	(b) ITEM NO
P	F		1560-563-9912	S1630-63035-1	<78286> ..STIFFENER,OIL COOLER..... SUPPORT		EA		1	*	*	*		*	74	60
P	F		1560-563-9913	S1630-63035-2	<78286> ..STIFFENER,OIL COOLER..... SUPPORT RPLS-- 1560-575-2041 ATTACHING PARTS		EA		1	*	*	*		*	74	
			5306-182-2057	AN3H4A	<88044> ..BOLT,MACHINE.....		HD		1	*	*	*		*	74	61
			5310-183-4406	AN960PD10	<88044> ..WASHER,FLAT.....		HD		1	*	*	*		*	74	
			5310-877-5797	MS21044N3	<96906> ..NUT,SELF-LOCKING,HEXAGON...		EA		1	*	*	*		*	74	
			5306-182-2057	AN3H4A	<88044> ..BOLT,MACHINE.....		HD		1	*	*	*		*	74	62
			5310-183-4406	AN960PD10	<88044> ..WASHER,FLAT.....		HD		2	*	*	*		*	74	
			5310-877-5797	MS21044N3	<96906> ..NUT,SELF-LOCKING,HEXAGON...		EA		1	*	*	*		*	74	
					---*---											
AF	F			S1630-63044	<78286> ..REGULATOR USBL EFF..... 53-4475 THRU 53-4479		EA		1						74	
		R	2935-315-6031	87465	<70210> ..REGULATOR ASSEMBLY..... RPL-BY P/N 88340										74	
		R	2935-332-6573	S1630-63043-1	<78286> ..REGULATOR ASSEMBLY..... RPL-BY PN 88340		EA			*	*	*			74	
P	F	R	2935-332-6573	88340	<70210> ..REGULATOR ASSEMBLY..... RPLS-- 2935-315-6031, 2935-766-2060 USBL EFF 53-4480 & SUBSEQUENT ATTACHING PARTS		EA		1	*	*	*		*	74	63
			5306-260-7573	AN42-7	<88044> ..BOLT,MACHINE.....		EA		2	*	*	*		*	74	64
			5310-183-4406	AN960PD10	<88044> ..WASHER,FLAT.....		HD		4	*	*	*		*	74	
			5310-877-5797	MS21044N3	<96906> ..NUT,SELF-LOCKING,HEXAGON...		EA		2	*	*	*		*	74	
			5306-182-2060	AN3H7A	<88044> ..BOLT,MACHINE.....		HD		2	*	*	*		*	74	65
			5310-183-4406	AN960PD10	<88044> ..WASHER,FLAT.....		HD		4	*	*	*		*	74	
			5310-877-5797	MS21044N3	<96906> ..NUT,SELF-LOCKING,HEXAGON...		EA		2	*	*	*		*	74	
					---*---											
P	F		2935-671-5295	151617	<70210> ...SHUTTER ASSEMBLY,OIL..... COOLER RPLS-- 2935-956-2949		EA		1	*	*	2		*	74	
P	F		2935-697-5628	87645	<70210> ...SPRING,HELICAL,COMPRESSION		EA		3	*	*	2		*	74	
P	F		5305-612-8605	87661	<70210> ...SCREW,ADJUSTMENT,STEEL....		EA		1	*	*	2		*	74	
P	F	R	2935-294-1543	88339	<70210> ...COOLER,LUBRICATING OIL....		EA		1	2	2	4		*	74	
P	F	R	2935-508-6096	88355-160-1	<70210> ...VALVE,TEMPERATURE..... REGULATING		EA		1	2	2	3		*	74	
P	H		6620-578-5939	19528-6	<70210> ....THERMOSTAT,FLOW CONTROL..		EA		1	*	*	*		*	74	
P	H		2935-691-6006	TA27321	<96452> ....ELEMENT ASSEMBLY.....		EA		1	*	*	*		*	74	
P	O		2935-328-2276	81008	<70210> ....VALVE ASSEMBLY-CHECK.....		EA		1	*	*	*		*	74	
P	O		1560-440-1834	153782	<70210> .....SPRING.....		EA		1	*	*	*		*	74	
P	D		6680-348-1659	19340	<70210> ....VALVE,THERMOSTAT.....		EA		1	*	*	*		*	74	
P	D		1660-535-8761	87628	<70210> ....THERMOSTAT ASSEMBLY.....		EA		1					*	74	
P	D		2935-570-4196	87658	<70210> .....RETAINER,THERMOSTAT,OIL.		EA		1					*	74	
P	H		2935-691-6005	EV10399	<96452> .....ELEMENT,POWER.....		EA		1	*	*	*		*	74	
P	F		1560-563-9916	S1630-63035-5	<78286> ..BRACKET,OIL COOLER..... SUPPORT		EA		1	*	*	*		*	74	66
P	F		1560-563-9917	S1630-63035-6	<78286> ..BRACKET,OIL COOLER..... SUPPORT ATTACHING PARTS		EA		1	*	*	*		*	74	

(1) SOURCE, MAINT AND REC CODE (a) SOURCE CODE	(b) MAINT LEVEL	(c) REC CODE	(2) FEDERAL STOCK NUMBER	REFERENCE NUMBER		(3) DESCRIPTION	MODELS USABLE ON CH-34C	(4) UNIT OF ISSUE	(5) QTY INC IN UNIT PACK	(6) QTY INC IN UNIT	(7) 30-DAY DS GS MAINT ALW (a) 1-20	(b) 21-50	(c) 51-100	(8) 1-YR ALW PER 100 EQUIP CNTGCY	(9) DEPOT MAINT ALW PER 100 EQUIP	(10) ILLUSTRATION (a) FIG NO	(b) ITEM NO
			5306-182-2057	AN3H4A	<88044>	..BOLT,MACHINE.....		HD		3	*	*	*		*	74	67
			5310-183-4406	AN960PD10	<88044>	..WASHER,FLAT.....		HD		6	*	*	*		*	74	
			5310-877-5797	MS21044N3	<96906>	..NUT,SELF-LOCKING,HEXAGON...		EA		3	*	*	*		*	74	
						---*---											
P	F		1560-564-8158	S1630-63035-8	<78286>	..BRACKET,OIL COOLER SUPPORT.		EA		1	*	*	*		*	74	68
P	F		1560-563-9918	S1630-63035-7	<78286>	..BRACKET,OIL COOLER..... SUPPORT		EA		1	*	*	*		*	74	
						ATTACHING PARTS											
			5306-182-2057	AN3H4A	<88044>	..BOLT,MACHINE.....		HD		2	*	*	*		*	74	69
			5310-183-4406	AN960PD10	<88044>	..WASHER,FLAT.....		HD		4	*	*	*		*	74	
			5310-877-5797	MS21044N3	<96906>	..NUT,SELF-LOCKING,HEXAGON...		EA		2	*	*	*		*	74	
						---*---											
AF	F			S1630-63030-5	<78286>	.DILUTION SYSTEM-OIL.....		EA		1						74	
P	F		4720-868-6978	MS27363E0210	<96906>	..HOSE ASSEMBLY.....		EA		1	*	2	2		*	74	70
			4730-186-9951	MS20823-4D	<96906>	..ELBOW,PIPE TO TUBE.....		EA		1	*	*	*		*	74	71
			4730-277-9386	AN912-1	<88044>	..BUSHING,PIPE.....		EA		1	*	*	*		*	74	
MF	O			S1630-62055-43	<78286>	..TUBE ASSEMBLY.....		EA		1						74	72
						MAKEFR											
						AR 4710-278-6398 TUBE											
						2 EA 4730-287-0289 NUT											
						2 EA 4730-302-8641 SLEEVE											
				S1630-62055-44	<78286>	...TUBE,OIL DILUTION.....		EA		1						74	75
			4730-240-5905	AN816-4D	<88044>	..ADAPTER,STRAIGHT,PIPE TO... TUBE		EA		1	*	*	*		*	74	76
			4730-277-9386	AN912-1	<88044>	..BUSHING,PIPE.....		EA		1	*	*	*		*	74	
P	F		2915-032-8178	5252	<75361>	..VALVE,SOLENOID.....		EA		1	*	*	*		*	74	77
						ATTACHING PARTS											
			5340-989-4575	EAB700D21	<81996>	..CLAMP,LOOP.....		EA		2	*	*	*		*	74	78
			5305-989-7434	MS35207-263	<96906>	..SCREW,MACHINE.....				2	*	*	*		*	74	
			5310-167-0753	AN960PD10L	<88044>	..WASHER,FLAT.....		HD		2	*	*	*		*	74	
						---*---											
P	O		2915-097-0311	7501-1	<80049>	..VALVE,FUEL DRAIN.....		EA		1	*	*	2		*	74	79
P	H		2935-715-2290	594000-1	<70210>	PARTS KIT,VALVE REGULATOR....		EA		1	*	2	2		*	74	
						U/O 2935-508-6096 SEE											
						FUNCTIONAL GROUP 50											
						FOR COMPONENTS											
P	H		2935-715-2291	594001-1	<70210>	PARTS KIT,VALVE REGULATOR....		EA		1	*	2	2	22	*	74	
						U/O 2935-508-6096 SEE											
						FUNCTIONAL GROUP 50 FOR COMP											
P	H		2935-767-8069	594002-1	<70210>	REPAIR KIT,REGULATOR U/O....		EA		1	*	2	2	19	*	74	
						PN 88340 SEE FUNCTIONAL											
						GROUP 50 FOR COMPONENTS											
						NOTE 1											
						U/O 1560-571-6229											
						NOTE 2											
						U/O 1560-572-8283											

(1) SOURCE, MAINT AND REC CODE (a) SOURCE CODE	(b) MAINT LEVEL	(c) REC CODE	(2) FEDERAL STOCK NUMBER	REFERENCE NUMBER	(3) DESCRIPTION	MODELS USABLE ON CH-34C	(4) UNIT OF ISSUE	(5) QTY INC IN UNIT PACK	(6) QTY INC IN UNIT	(7) 30-DAY DS/GS MAINT ALW (a) 1-20	(b) 21-50	(c) 51-100	(8) 1-YR ALW PER 100 EQUIP CNTGCY	(9) DEPOT MAINT ALW PER 100 EQUIP	(10) ILLUSTRATION (a) FIG NO	(b) ITEM NO
				S1630-63100-2 <78286>	LUBRICATION SYSTEM..... USBL EFF 56-4313 AND SUBSEQUENT SEE FIG.40 FOR NHA										75	
			5340-548-7812	EAB700-20 <81996>	.CLAMP,SUPPORT..... ATTACHING PARTS		EA		1	*	*	*		*	75	1
			5305-989-7435	MS35207-264 <96906>	.SCREW,MACHINE.....		HD		1	*	*	*		*	75	2
			5310-183-4406	AN960PD10 <88044>	.WASHER,FLAT.....		HD		1	*	*	*		*	75	
			5310-877-5797	MS21044N3 <96906>	.NUT,SELF-LOCKING,HEXAGON.... ---*---		EA		1	*	*	*		*	75	
P	F		1630-766-3492	S1620-61570-2 <78286>	.CLIP,FLOAT.....		EA		1	*	*	*		*	75	3
P	F		1560-627-2219	S1630-63025-11 <78286>	.HOSE ASSEMBLY,RUBBER.....		EA		1	*	2	2		*	75	5
P	O		1560-626-7277	S1630-63100-3 <78286>	.TUBE ASSEMBLY.....		EA		1	*	*	2		*	75	6
P	F		1560-633-0890	S1630-63026-21 <78286>	.TUBE ASSEMBLY USBL EFF..... 56-4313 AND SUBSEQUENT		EA		1	*	*	*		*	75	7
			5310-208-4134	MS24400D24 <96906>	.NUT,PLAIN,HEXAGON.....		EA		1	*	*	*		*	75	8
			5330-816-3546	MS28778-20 <96906>	.PACKING,PREFORMED.....		EA		1	REF	REF	REF		*	75	
			4730-197-2921	MS24394D20 <96906>	.ELBOW,TUBE.....		EA		1	*	*	*		*	75	
			4730-289-6122	AN760D20 <88044>	.COUPLING,TUBE..... ATTACHING PARTS		EA		1	*	*	*		*	75	9
			5306-182-2015	AN4H4A <88044>	.BOLT,MACHINE.....		HD		4	*	*	*		*	75	10
			5310-184-9001	AN960PD416L <88044>	.WASHER,FLAT..... ---*---		HD		4	*	*	*		*	75	
P	F		1560-332-3530	S1630-63004 <78286>	.TUBE ASSEMBLY,LUBRICATION... PORT		EA		1	*	*	*		REF	75	11
P	O		1560-792-6464	S1630-63026-23 <78286>	.TUBE ASSEMBLY,POWER.....		EA		1	*	*	*		*	75	12
			5310-282-7835	MS24400D8 <96906>	.NUT,PLAIN,HEXAGON.....		AX		2	*	*	*		*	75	13
			4730-197-2917	MS24394D8 <96906>	.ELBOW,TUBE.....		EA		2	*	*	*		*	75	
P	O		1560-626-7274	S1630-63026-19 <78286>	.TUBE ASSEMBLY.....		EA		1	*	*	*		*	75	14
			4730-585-8529	MS20762D20 <96906>	.ELBOW,TUBE.....		EA		1	*	*	*		*	75	15
			4730-289-0788	AN756D20 <88044>	.FLANGE,PIPE,SWIVEL..... RETAINING ATTACHING PARTS		EA		1	*	*	*		*	75	16
			5306-182-2015	AN4H4A <88044>	.BOLT,MACHINE.....		HD		4	*	*	*		*	75	17
			5310-184-9001	AN960PD416L <88044>	.WASHER,FLAT..... ---*---		HD		4	*	*	*		*	75	
			4730-585-8529	MS20762D20 <96906>	.ELBOW,TUBE.....		EA		1	*	*	*		*	75	18
			4730-289-0788	AN756D20 <88044>	.FLANGE,PIPE,SWIVEL..... RETAINING ATTACHING PARTS		EA		1	*	*	*		*	75	19
			5310-184-9001	AN960PD416L <88044>	.WASHER,FLAT.....		HD		4	*	*	*		*	75	20
			5310-877-5796	MS21044N4 <96906>	.NUT,SELF-LOCKING,HEXAGON.... ---*---		EA		4	*	*	*		*	75	
			5330-599-1319	AN763-20 <88044>	.GASKET.....		EA		1	*	*	*		*	75	21
			4730-289-5144	MS20760D12 <96906>	.COUPLING,TUBE..... ATTACHING PARTS		EA		1	*	*	*		*	75	22
			5306-182-2057	AN3H4A <88044>	.BOLT,MACHINE.....		HD		4	*	*	*		*	75	23
			5310-167-0753	AN960PD10L <88044>	.WASHER,FLAT..... ---*---		HD		4	*	*	*		*	75	
		R	2995-612-1553	AV16B1354C <73760>	.VALVE,GATE MOTOR OPERATED... RPL-BY 2995-632-9363										75	
		R	4820-633-0953	S1630-63103 <78286>	.VALVE,DIVERTER RPL-BY.....										75	

(1) SOURCE, MAINT AND REC CODE (a) SOURCE CODE	(b) MAINT LEVEL	(c) REC LEVEL CODE	(2) FEDERAL STOCK NUMBER	REFERENCE NUMBER		(3) DESCRIPTION	MODELS USABLE ON CH-34C	(4) UNIT OF ISSUE	(5) QTY INC IN UNIT PACK	(6) QTY INC IN UNIT	(7) 30-DAY DS GS MAINT ALW (a) 1-20	(b) 21-50	(c) 51-100	(8) 1-YR ALW PER 100 EQUIP CNTGCY	(9) DEPOT MAINT ALW PER 100 EQUIP	(10) ILLUSTRATION (a) FIG NO	(b) ITEM NO
						CONTINUED										75	
						2995-632-9363											
P	O	R	2995-632-9363	AV16B1456C	<73760>	.VALVE,GATE MOTOR OPERATED...		EA		1	*	*	*		*	75	24
						RPLS-- 2915-612-1553,											
						4820-633-0953											
P	F		5945-225-8692	MS24149D1	<96906>	.RELAY,SOLENOID.....		EA		1	*	*	*		*	75	
						USE-AFT-CMPL-W											
						MWO 55-1520-202-34/6											
			5305-889-2999	MS35206-217	<96906>	.SCREW,MACHINE.....		HD		4	*	*	*		*	75	
			5305-273-5342	AN525-832R12	<88044>	.SCREW,MACHINE.....		EA		2	*	*	*		*	75	
			5310-550-5009	MS15795-704	<96906>	.WASHER,FLAT.....		HD		4	*	*	*		*	75	
			5310-184-8966	AN960PD8	<88044>	.WASHER,FLAT.....NOTE 3		HD		2	*	*	*			75	
			5310-088-0551	MS21044N04	<96906>	.NUT,SELF-LOCKING,HEXAGON....		EA		4	*	*	*		*	75	
			5310-811-3494	MS21044N08	<96906>	.NUT,SELF-LOCKING,HEXAGON....		EA		2	*	*	*		*	75	
				MS27212-1-1	<96906>	.TERMINAL BOARD.....		EA		2						75	
						USE-AFT-CMPL-W											
						MWO 55-1520-202-34/6											
				397-1	<94640>	.COVER,TERMINAL BOARD.....		EA		2						75	
						USE-AFT-CMPL-W											
						MWO 55-1520-202-34/6											
			5940-283-5280	MS25036-6	<96906>	.TERMINAL,LUG.....		HD		8	*	*	*		*	75	
			4820-654-1523	K14080B	<75361>	.COCK,DRAIN RPL-BY.....										75	
						2935-028-0228											
P	F		2935-028-0228	K1480B	<75361>	.COCK,DRAIN RPLS--.....		EA		1	*	*	*		REF	75	25
						4820-654-1523											
X1				1709A1-3	<75361>	.PACKING,PREFORMED.....		EA		1						75	
			5330-883-8226	AN900-26	<88044>	.GASKET.....		EA		1	*	*	*		*	75	26
			4730-585-8769	AN929A6	<88044>	.CAP,TUBE.....		EA		1	*	*	*		*	75	27
			4730-684-6916	MS24392D6	<96906>	.NIPPLE,TUBE.....		EA		1	REF	REF	REF	REF	*	75	28
			5330-804-5695	MS28778-6	<96906>	.PACKING,PREFORMED.....		EA		1	REF	REF	REF		*	75	29
			1560-575-2039	S1630-63019	<78286>	.HOUSING RPL-BY.....										75	
						1560-625-9363											
			1560-332-3535	S1630-63032	<78286>	.HOUSING RPL-BY.....										75	
						1560-625-9363											
			1560-563-9911	S1630-63032-2	<78286>	.HOUSING RPL-BY.....										75	
						1560-625-9363											
P	F		1560-625-9363	S1630-63040-2	<78286>	.HOUSING,OIL CHECK VALVE.....		EA		1	*	*	*		REF	75	30
						RPLS-- 1560-332-3535,											
						1560-563-9911,&											
						1560-575-2039											
						ATTACHING PARTS											
			5306-180-2754	AN5H15	<88044>	.BOLT,MACHINE.....		EA		4	*	*	*		*	75	31
			5310-184-8980	AN960PD516L	<88044>	.WASHER,FLAT.....		HD		8	*	*	*		*	75	
			5310-088-0553	MS21044N5	<96906>	.NUT,SELF-LOCKING,HEXAGON....		HD		4	*	*	*		*	75	
						---*---											
P	F		2995-576-8110	S1630-63027-1	<78286>	.GASKET,CHECK VALVE SEAL.....		EA		2	REF	REF	REF		REF	75	32
						RPLS-- 1560-663-7068											
P	F		2995-945-2160	S1630-63057-1	<96772>	.VALVE ASSEMBLY,OIL SYSTEM...		EA		1	*	*	*		REF	75	33
P	F		1560-633-6474	S1630-63039	<78286>	.FITTING ASSEMBLY,.....		EA		1	*	*	*		REF	75	34
						INTERMEDIATE OIL OUTLINE											
						RPLS-- 1560-332-3534,											
						1560-[illegible]-0886											

(1) SOURCE, MAINT AND REC CODE (a) SOURCE CODE	(b) MAINT LEVEL	(c) REC CODE	(2) FEDERAL STOCK NUMBER	REFERENCE NUMBER	(3) DESCRIPTION	MODELS USABLE ON CH-34C	(4) UNIT OF ISSUE	(5) QTY INC IN UNIT PACK	(6) QTY INC IN UNIT	(7) 30-DAY DS GS MAINT ALW (a) 1-20	(b) 21-50	(c) 51-100	(8) 1 YR ALW PER 100 EQUIP CNTGCY	(9) DEPOT MAINT ALW PER 100 EQUIP	(10) ILLUSTRATION (a) FIG NO	(b) ITEM NO
					CONTINUED										75	34
					ATTACHING PARTS											
			5310-141-1795	AN960-416 <88044>	.WASHER,FLAT.....		HD		4	*	*	*		*	75	35
			5310-877-5796	MS21044N4 <96906>	.NUT,SELF-LOCKING,HEXAGON....		EA		4	*	*	*		*	75	
					---*---											
			5330-171-6945	AN763-24 <88044>	.GASKET.....		EA		1	REF	REF	REF		*	75	36
P	F		1560-613-0952	S1630-63042 <78286>	.TUBE ASSEMBLY RPLS--.....		EA		1	*	*	REF		REF	75	37
					1560-336-0875											
				S1630-63003-6 <78286>	.OIL CELL INSTALLATION SEE..				1						75	38
					FIG.76 FOR BREAKDOWN											
				S1630-63034-1 <78286>	.OIL COOLER AND DUCT.....				1						75	39
					INSTALLATION											
			5305-558-8934	AN525D10R8 <88044>	..SCREW,MACHINE.....		HD		6	*	*	*		*	75	40
P	F		1560-571-6229	S1630-63048-40 <78286>	..DUCT ASSEMBLY.....		EA		1	*	*	*		REF	75	41
					RPLS-- 1560-693-8819											
					NOTE 1											
					ATTACHING PARTS											
			5306-182-2057	AN3H4A <88044>	..BOLT,MACHINE.....		HD		6	*	*	*		*	75	42
			5310-183-4406	AN960PD10 <88044>	..WASHER,FLAT.....		HD		6	*	*	*		*	75	
			5306-182-2059	AN3H6A <88044>	..BOLT,MACHINE.....		HD		4	*	*	*		*	75	43
			5310-183-4406	AN960PD10 <88044>	..WASHER,FLAT.....		HD		8	*	*	*		*	75	
			5310-877-5797	MS21044N3 <96906>	..NUT,SELF-LOCKING,HEXAGON...		EA		4	*	*	*		*	75	
					---*---											
P	F		1560-571-6229	S1630-63048-40 <78286>	..DUCT ASSEMBLY.....		EA		1	*	*	*		REF	75	44
					RPLS-- 1560-693-8819											
P	F		1560-572-8283	S1630-63048-41 <78286>	..DUCT ASSEMBLY,OIL COOLER...		EA		1	*	*	*		REF	75	
					RPLS-- 1560-563-9921											
			5310-728-7711	MS21081-3 <96906>	...NUT,SELF-LOCKING,PLATE...		EA		2	*	*	*		*	75	45
MF	F			S1630-63048-5 <78286>	...ANGLE.....NOTE 1		EA		1						75	47
					MAKEFR											
					AR 9535-554-1415 AL ALLY SH											
			5310-728-5510	MS21078-3 <96906>	...NUT,SELF-LOCKING,PLATE....		EA		3	*	*	*		*	75	50
MF	F			S1630-63048-11 <78286>	...ANGLE.....NOTE 1		EA		1						75	51
					MAKEFR											
					AR 9535-554-1412 AL ALLY SH											
					ATTACHING PARTS											
MF	F			S1630-63048-7 <78286>	...DOUBLER.....NOTE 2		EA		1						75	54
					MAKEFR											
					AR 9535-554-1412 AL ALLY SH											
MF	F			S1630-63048-12 <78286>	...ANGLE.....NOTE 2		EA		1						75	55
					MAKEFR											
					AR 9535-554-1412 AL ALLY SH											
MF	F			S1630-63048-8 <78286>	...DOUBLER.....NOTE 2		EA		1						75	57
					MAKEFR											
					AR 9320-241-9740 RBR SH,SLD											
MF	F			S1630-63048-6 <78286>	...ANGLE.....NOTE 2		EA		1						75	58
					MAKEFR											
					AR 9535-554-1415 AL ALLY SH											
MF	F			S1630-63048-37 <78286>	...STRIP.....		EA		1						75	60
					MAKEFR											
					AR 9535-554-1412 AL ALLY SH											
P	F		1560-624-9998	S1630-63048-36 <78286>	...SEAL,UPPER.....		EA		1	*	REF	REF		REF	75	61

(1) SOURCE MAINT AND RFC CODE (a) SOURCE CODE	(b) MAINT CODE	(c) RECOVERY CODE	(2) FEDERAL STOCK NUMBER	REFERENCE NUMBER		(3) DESCRIPTION	MODELS USABLE ON CH-34C	(4) UNIT OF ISSUE	(5) QTY INC IN UNIT PACK	(6) QTY INC IN UNIT	(7) 30-DAY DS GS MAINT ALW (a) 1-20	(b) 21-50	(c) 51-100	(8) 1-YR ALWPER 100 EQUIP CNTGCY	(9) DEPOT MAINT ALWPER 100 EQUIP	(10) ILLUSTRATION (a) FIG NO	(b) ITEM NO
MF	F			S1630-63048-29	<78286>	...STRIP.....NOTE 1 MAKEFR AR 9535-167-2279 AL ALLY SH		EA		2						75	62
MF	F			S1630-63048-32	<78286>	...STRIP.....NOTE 2 MAKEFR AR 9535-167-2279 AL ALLY SH		EA		2						75	
P	F		1560-625-4523	S1630-63048-27	<78286>	...SEAL,UPPER OIL COOLER.....		EA		1	*	REF	REF		REF	75	63
MF	F			S1630-63048-28	<78286>	...SEAL..... MAKEFR AR 9535-554-1415 RBR SH,SLD		EA		1						75	
P	F		1560-625-C000	S1630-63048-38	<78286>	...SEAL.....		EA		1	*	REF	REF		REF	75	64
P	F		1560-632-0983	S1630-63048-39	<78286>	...SEAL,LOWER OIL COOLER.....		EA		1	*	REF	REF		REF	75	
MF	F			S1630-63048-9	<78286>	...SEAL.....NOTE 1 MAKEFR AR 9320-241-9740 RBR SH,SLD		EA		1						75	65
MF	F			S1630-63048-10	<78286>	...SEAL.....NOTE 1 MAKEFR AR 9320-241-9742 RBR SH,SLD		EA		1						75	66
				MS20470A4	<96906>	...RIVET.....		EA		20						75	67
MF	F			S1630-63048-31	<78286>	...STRIP..... MAKEFR AR 9535-167-2279 AL ALLY SH		EA		1						75	68
X2	F		1560-632-0982	S1630-63048-25	<78286>	...SEAL-LOWER,OIL COOLER.....		EA		1	*	*	*		REF	75	69
MF	F			S1630-63048-30	<78286>	...STRIP..... MAKEFR AR 9535-167-2279 AL ALLY SH		EA		2						75	70
P	F		1560-624-9997	S1630-63048-35	<78286>	...SEAL.....NOTE 1		EA		2	*	REF	REF		REF	75	71
				S1630-63048-3	<78286>	...WELD ASSEMBLY.....NOTE 1		EA		1						75	72
				S1630-63048-4	<78286>	...WELD ASSEMBLY.....NOTE 2		EA		1						75	
P	F		1560-563-9912	S1630-63035-1	<78286>	..STIFFENER,OIL COOLER..... SUPPORT		EA		1	*	*	*		REF	75	73
P	F		1560-563-9913	S1630-63035-2	<78286>	..STIFFENER,OIL COOLER..... SUPPORT ATTACHING PARTS		EA		1	*	*	*		REF	75	
			5306-182-2057	AN3H4A	<88044>	..BOLT,MACHINE.....		HD		1	*	*	*		*	75	74
			5310-183-4406	AN960PD10	<88044>	..WASHER,FLAT.....		HD		1	*	*	*		*	75	
			5310-877-5797	MS21044N3	<96906>	..NUT,SELF-LOCKING,HEXAGON...		EA		1	*	*	*		*	75	
			5306-182-2057	AN3H4A	<88044>	..BOLT,MACHINE.....		HD		1	*	*	*		*	75	75
			5310-183-4406	AN960PD10	<88044>	..WASHER,FLAT.....		HD		2	*	*	*		*	75	
			5310-877-5797	MS21044N3	<96906>	..NUT,SELF-LOCKING,HEXAGON...		EA		1	*	*	*		*	75	
						---*---											
AF	F			S1630-63044	<78286>	..REGULATOR USBL EFF..... 53-4475 THRU 53-4479		EA		1						75	
P	F	R	2935-332-6573	88340	<70210>	..REGULATOR ASSEMBLY..... RPLS-- 2935-315-6031, 2935-766-2060 USBL EFF 53-4480 AND SUBSEQUENT SEE FIG.74 FOR COMPONENTS ATTACHING PARTS		EA		1	*	*	*		REF	75	76
			5306-260-7573	AN42-7	<88044>	..BOLT,MACHINE.....		EA		2	*	*	*		*	75	77
			5310-183-4406	AN960PD10	<88044>	..WASHER,FLAT.....		HD		4	*	*	*		*	75	
			5310-877-5797	MS21044N3	<96906>	..NUT,SELF-LOCKING,HEXAGON...		EA		2	*	*	*		*	75	

(1) SOURCE, MAINT AND REC CODE (a) SOURCE CODE	(b) MAINT LEVEL	(c) REC CODE	(2) FEDERAL STOCK NUMBER	REFERENCE NUMBER	(3) DESCRIPTION	MODELS USABLE ON CH-34C	(4) UNIT OF ISSUE	(5) QTY INC IN UNIT PACK	(6) QTY INC IN UNIT	(7) 30 DAY DS GS MAINT ALW (a) 1-20	(b) 21-50	(c) 51-100	(8) 1-YR ALW PER 100 EQUIP CNTGCY	(9) DEPOT MAINT ALW PER 100 EQUIP	(10) ILLUSTRATION (a) FIG NO	(b) ITEM NO
			5306-182-2060	AN3H7A <88044>	..BOLT,MACHINE.....		HD		2	*	*	*		*	75	78
			5310-183-4406	AN960PD10 <88044>	..WASHER,FLAT.....		HD		4	*	*	*		*	75	
			5310-877-5797	MS21044N3 <96906>	..NUT,SELF-LOCKING,HEXAGON...		EA		2	*	*	*		*	75	
					---*---											
P	F		1560-563-9916	S1630-63035-5 <78286>	..BRACKET,OIL COOLER SUPPORT.		EA		1	*	*	*		REF	75	82
P	F		1560-563-9917	S1630-63035-6 <78286>	..BRACKET,OIL COOLER SUPPORT.		EA		1	*	*	*		REF	75	
					ATTACHING PARTS											
			5306-182-2057	AN3H4A <88044>	..BOLT,MACHINE.....		HD		3	*	*	*		*	75	83
			5310-183-4406	AN960PD10 <88044>	..WASHER,FLAT.....		HD		6	*	*	*		*	75	
			5310-877-5797	MS21044N3 <96906>	..NUT,SELF-LOCKING,HEXAGON...		EA		3	*	*	*		*	75	
					---*---											
P	F		1560-564-8158	S1630-63035-8 <78286>	..BRACKET,OIL COOLER SUPPORT.		EA		1	*	*	*		REF	75	84
P	F		1560-563-9918	S1630-63035-7 <78286>	..BRACKET,OIL COOLER SUPPORT.		EA		1	*	*	*		REF	75	
					ATTACHING PARTS											
			5306-182-2057	AN3H4A <88044>	..BOLT,MACHINE.....		HD		2	*	*	*		*	75	85
			5310-183-4406	AN960PD10 <88044>	..WASHER,FLAT.....		HD		4	*	*	*		*	75	
			5310-877-5797	MS21044N3 <96906>	..NUT,SELF-LOCKING,HEXAGON...		EA		2	*	*	*		*	75	
					---*---											
P	F		4720-868-6978	MS27363E0210 <96906>	..HOSE ASSEMBLY.....		EA		1	*	REF	REF		*	75	86
			4730-186-9951	MS20823-4D <96906>	..ELBOW,PIPE TO TUBE.....		EA		1	*	*	*		*	75	87
			4730-277-9386	AN912-1 <88044>	..BUSHING,PIPE.....		EA		1	*	*	*		*	75	
MF	O			S1630-62055-43 <78286>	..TUBE ASSEMBLY.....		EA		1						75	88
					MAKEFR											
					AR 4710-278-6398 TUBE											
					2 EA 4730-287-0289 NUT											
					2 EA 4730-302-8641 SLEEVE											
MF	F			S1630-62055-44 <78286>	...TUBE,OIL DILUTION.....		EA		1						75	91
					MAKEFR											
					AR 4710-279-0958 TUBE											
			4730-240-5905	AN816-4D <88044>	..ADAPTER,STRAIGHT PIPE TO...		EA		1	*	*	*		*	75	92
					TUBE											
			4730-277-9386	AN912-1 <88044>	..BUSHING,PIPE.....		EA		1	*	*	*		*	75	
P	F		2915-032-8178	5252 <75361>	..VALVE,SOLENOID.....		EA		1	*	*	*		REF	75	93
					RPLS-- 2915-095-1864											
					ATTACHING PARTS											
			5340-989-4575	EAB700D21 <81996>	..CLAMP,LOOP.....		EA		2	*	*	*		*	75	94
			5305-989-7434	MS35207-263 <96906>	..SCREW,MACHINE.....				2	*	*	*		*	75	
			5310-167-0753	AN960PD10L <88044>	..WASHER,FLAT.....		HD		2	*	*	*		*	75	
			5310-857-4948	MS21045L6 <96906>	..NUT,SELF-LOCKING,HEXAGON...		HD		8	*	*	*		*	75	
					---*---											
P	O		2915-097-0311	7501-1 <80049>	..VALVE,DRAIN,HYDROCARBON....		EA		1	*	*	REF		REF	75	95
P	H		2935-715-2290	594000-1 <70210>	PARTS KIT,VALVE REGULATOR....		EA		1	*	REF	REF		REF	75	
					U/O 2935-508-6096 SEE											
					FUNCTIONAL GROUP 50											
					FOR COMPONENTS											
P	H		2935-715-2291	594001-1 <70210>	PARTS KIT,VALVE REGULATOR....		EA		1	*	REF	REF	REF	REF	75	
					U/O 2935-508-6096 SEE											
					FUNCTIONAL GROUP 50											
					FOR COMPONENTS											
P	H		2935-767-8069	594002-1 <70210>	REPAIR KIT,REGULATOR U/O....		EA		1	*	REF	REF	REF	REF	75	
					PN 88340 SEE FUNCTIONAL											
					GROUP 50 FOR COMPONENTS											

(1) SOURCE, MAINT AND REC CODE (a) SOURCE CODE	(b) MAINT LEVEL	(c) REC CODE	(2) FEDERAL STOCK NUMBER	REFERENCE NUMBER	(3) DESCRIPTION	MODELS USABLE ON CH-34C	(4) UNIT OF ISSUE	(5) QTY INC IN UNIT PACK	(6) QTY INC IN UNIT	(7) 30-DAY DS GS MAINT ALW (a) 1-20	(b) 21-50	(c) 51-100	(8) 1-YR ALW PER 100 EQUIP CNTGCY	(9) DEPOT MAINT ALW PER 100 EQUIP	(10) ILLUSTRATION (a) FIG NO	(b) ITEM NO
					CONTINUED										75	
					NOTE 1											
					U/O 1560-571-6229											
					NOTE 2											
					U/O 1560-572-8283											
					NOTE 3											
					COMPONENT OF KIT											
					1615-733-2563											
				S1630-63003-5 <78286>	OIL CELL INSTALLATION SEE... FIG.74 FOR NHA										76	
				S1630-63003-6 <78286>	OIL CELL INSTALLATION SEE... FIG.75 FOR NHA										76	
			4730-684-6913	MS24392D16 <96906>	.NIPPLE,TUBE.....		EA		1	*	*	*		*	76	1
			5330-804-5694	AN6290-16 <88044>	.PACKING,PREFORMED.....		EA		1	REF	REF	REF		*	76	2
			4730-279-0122	MS24396D16 <96906>	.ELBOW,TUBE.....		EA		1	*	*	*		*	76	3
			5310-208-4112	MS24400D16 <96906>	.NUT,PLAIN,HEXAGON.....		EA		1	*	*	*		*	76	4
			5330-804-5694	AN6290-16 <88044>	.PACKING,PREFORMED.....		EA		1	REF	REF	REF		*	76	5
			4730-278-4646	AN822-12-16D <88044>	.ELBOW,PIPE.....		EA		1	*	*	*		*	76	6
P	D		1560-707-3320	S1630-63026-5 <78286>	.TUBE ASSEMBLY.....		EA		1	*	*	*		*	76	7
			4730-186-9961	AN822-4D <88044>	.ELBOW,PIPE.....		EA		1	*	*	*		*	76	8
		R	2995-632-9181	RG6100H <51663>	.PUMP OIL USBL EFF..... 56-4284 TO 56-4312 OBS-AFT-COMP-W MWO 55-1520-202-34/16		EA								76	9
					ATTACHING PARTS											
			5306-182-1852	AN5H6A <88044>	.BOLT,MACHINE.....		HD		4	*	*	*		*	76	10
					---*---											
			6105-196-0058	A7033 <72560>	..MOTOR,DIRECT CURRENT..... RPL-BY 6105-635-6605		EA			*	*	*			76	
P	F	R	6105-635-6605	A7033A1 <24617>	..MOTOR,DIRECT CURRENT..... RPLS-- 6105-196-0058		EA		1	*	*	*		*	76	10A
P	D		5305-984-5697	MS35206-317 <24617>	..SCREW,MACHINE.....		EA		1					*	76	
P	F		5935-755-3152	MS3102R20-15SC <96906>	..CONNECTOR,ELECTRICAL.....		EA		1	*	*	*		*	76	
			1560-335-6956	S1630-63013 <78286>	.TUBE ASSEMBLY RPL-BY..... 1560-699-4368										76	
P	F		1560-699-4368	S1630-63052 <78286>	.FITTING,HYDROMATIC CLUTCH... RPLS-- 1560-335-6956		EA		1	*	*	*		*	76	11
			5330-579-7914	MS28775-217 <96906>	.PACKING,PREFORMED.....		EA		1	REF	REF	REF		*	76	12
			1560-326-3475	S1630-63007 <78286>	.COVER ASSEMBLY,OIL..... RPL-BY 1560-611-3481				1						76	
			1560-336-0865	S1630-63007-9 <78286>	.COVER ASSEMBLY,OIL..... RPL-BY 1560-611-3481				1						76	
			1560-699-4366	S1630-63007-10 <78286>	.COVER ASSEMBLY..... OBS-AFT-CMPL-W MWO 55-1520-202-34/16										76	
P	F		1560-611-3481	S1630-63007-12 <78286>	.COVER ASSEMBLY-LH.....		EA		1	*	2	2		*	76	

(1) SOURCE, MAINT AND REC CODE (a) SOURCE CODE	(b) MAINT LEVEL	(c) REC CODE	(2) FEDERAL STOCK NUMBER	REFERENCE NUMBER		(3) DESCRIPTION	MODELS USABLE ON CH-34C	(4) UNIT OF ISSUE	(5) QTY INC IN UNIT PACK	(6) QTY INC IN UNIT	(7) 30-DAY DS GS MAINT ALW (a) 1-20	(b) 21-50	(c) 51-100	(8) 1-YR ALW PER 100 EQUIP CNTGCY	(9) DEPOT MAINT ALW PER 100 EQUIP	(10) ILLUSTRATION (a) FIG NO	(b) ITEM NO
						CONTINUED											
						ATTACHING PARTS											
			5306-182-2016	AN4H5A	<88044>	.BOLT,MACHINE.....		HD		24	*	*	*		*	76	14
			5310-184-9001	AN960PD416L	<88044>	.WASHER,FLAT.....		HD		24	*	*	*		*	76	
						---*---											
X1				S1630-63007-11	<78286>	..WELD ASSEMBLY.....		EA		1						76	
P	F		1560-699-4367	S1630-63051	<78286>	...TUBE ASSEMBLY.....		EA		1	*	*	*		*	76	15
P	F		1560-340-6783	S1630-63029	<78286>	.GASKET,TANK,LUBRICATING OIL.		EA		1	5	13	26		*	76	16
P	O		4720-857-1733	M1LH27267-20Z	<81349>	.HOSE,NONMETALLIC.....		FT		AR	18	44	88		*	76	17
				S1630-63003-21	<78286>	.CLAMP RPL-BY 4730-289-5894.										76	
P	F		4730-289-5894	737RM48	<81352>	.CLAMP,HOSE RPLS--.....		EA		2	*	*	*		*	76	18
						PN S1630-63003-21											
			4730-289-0786	AN756D24	<88044>	.FLANGE,PIPE.....		EA		1	*	*	*		*	76	19
						ATTACHING PARTS											
			5306-182-1531	AN4H13	<88044>	.BOLT,MACHINE.....		EA		4	*	*	*		*	76	20
P	O		5330-580-5327	110 1-4	<86579>	.PACKING-WITH RETAINER.....		EA		4	*	*	*		*	76	
						---*---											
			4730-640-5053	AN762D24	<88044>	.ELBOW,TUBE.....		EA		1	*	*	*		*	76	21
			5330-171-6945	AN763-24	<88044>	.GASKET.....		EA		1	REF	REF	REF		*	76	22
X2	O			S1620-62162	<78286>	.SPACER,OIL CELL INSTRUMENT..		EA		1						76	23
			1560-334-6360	S1630-63011	<78286>	.FITTING ASSEMBLY RPL-BY....		EA			*	*	*			76	
						1560-590-0369											
			1560-625-9366	S1630-63038	<78286>	.FITTING ASSEMBLY RPL-BY....										76	
						1560-590-0369											
P	O		1560-590-0369	S1630-63038-5	<78286>	.FITTING ASSEMBLY RPLS--....		EA		1	*	*	*		*	76	24
						1560-334-6360,											
						1560-625-9366											
			4730-639-9023	AN760D24	<88044>	.ADAPTER,STRAIGHT,PIPE TO....		EA		1	*	*	*		*	76	25
						TUBE											
						ATTACHING PARTS											
			5306-182-1528	AN4H10	<88044>	.BOLT,MACHINE.....		HD		4	*	*	*		*	76	26
P	O		5330-580-5327	110 1-4	<86579>	.PACKING-WITH RETAINER.....		EA		4	*	*	*		REF	76	
						---*---											
			5330-171-6945	AN763-24	<88044>	.GASKET.....		EA		1	REF	REF	REF		*	76	27
			1560-625-9365	S1630-63037	<78286>	.FITTING ASSEMBLY RPL-BY....										76	
						1560-592-0603											
P	F		1560-592-0603	S1630-63037-5	<78286>	.FITTING ASSEMBLY RPLS--....		EA		1	*	*	*		*	76	28
						1560-333-7046,											
						1560-625-9365											
P	F		5330-226-1833	S1630-63003-25	<78286>	.GASKET.....		EA		2	*	*	*		*	76	29
P	F		1650-203-6321	S1630-63045	<78286>	.COCK,POPPET DRAIN RPLS--...		EA		1	*	2	2		*	76	30
						1560-626-7211											
			5330-804-5695	MS28778-6	<96906>	.PACKING,PREFORMED.....		EA		1	REF	REF	REF		*	76	31
P	F		1560-570-0647	S1630-63010	<78286>	.PLATE,OIL SUMP FITTING.....		EA		1	*	*	2		*	76	32
						ATTACHING PARTS											
			5306-182-1526	AN4H6	<88044>	.BOLT,MACHINE.....		HD		4	*	*	*		*	76	33
P	F		5330-580-5327	110 1-4	<86579>	.PACKING-WITH RETAINER.....		EA		4	*	*	*		REF	76	
						---*---											
			1560-333-7045	S1630-63009	<78286>	.FITTING ASSEMBLY RPL-BY....										76	
						1560-590-0368											
P	O		1560-590-0368	S1630-63041-5	<78286>	.FITTING ASSEMBLY RPLS--....		EA		1	*	*	*		*	76	34
						1560-333-7045,											

(1) SOURCE, MAINT AND REC CODE (a) SOURCE CODE	(b) MAINT CODE	(c) RECOVERY CODE	(2) FEDERAL STOCK NUMBER	REFERENCE NUMBER	(3) DESCRIPTION	MODELS USABLE ON CH-34C	(4) UNIT OF ISSUE	(5) QTY INC IN UNIT PACK	(6) QTY INC IN UNIT	(7) 30-DAY DS GS MAINT ALW (a) 1-20	(b) 21-50	(c) 51-100	(8) 1-YR ALW PER 100 EQUIP CNTGCY	(9) DEPOT MAINT ALW PER 100 EQUIP	(10) ILLUSTRATION (a) FIG NO	(b) ITEM NO
					CONTINUED										76	34
					1560-625-9367											
P	F		1560-663-4465	S1630-62036 <78286>	.GASKET.....		EA		2	11	27	54		*	76	35
P	F		1560-028-1023	2F1-4-18295-1 <73842>	.TANK LUBRICATING OIL.....		EA		1	*	*	2	7	*	76	36
P	F		5340-663-0034	43052-2-81S <98625>	.CLAMP,LOOP.....		EA		1	*	*	*		*	76	37
			5330-576-9732	MS28775-226 <96906>	.PACKING,PREFORMED.....		EA		1	2	4	8		*	76	38
P	F		1560-570-0648	S1630-63024 <78286>	.COLLAR,OIL FILLER NECK SEAL.		EA		1	*	2	2		*	76	39
AF	F			S1630-63014-1 <78286>	.FILLER ASSEMBLY-OIL.....		EA		1						76	40
					ATTACHING PARTS											
			5305-958-1009	MS35219-55 <96906>	.SCREW,MACHINE.....		EA		6	*	*	*		*	76	41
					---*---											
P	F		1560-332-3532	S1630-63015 <78286>	..NECK ASSEMBLY,OIL TANK.....		EA		1	*	*	2		*	76	42
			1560-332-3533	S1630-63016 <78286>	..STICK ASSEMBLY-OIL DIP.....										76	
					RPL-BY 1560-563-9910											
P	C		1560-563-9910	S1630-63016-7 <78286>	..DIP STICK ASSEMBLY,OIL.....		EA		1	2	2	3		*	76	43
					RPLS-- 1560-332-3533											
X1				S1630-63016-6 <78286>	...SLIDING HOOP,DIP STICK....		EA		1						76	
					WHEN EXHTD RQTN NHA											
					1560-563-9910											
P	O		1560-663-4463	S1630-63008 <78286>	.GASKET.....		EA		1	2	2	4		*	76	44
			1560-663-4463	505322 <02106>	ADDED PART NO. FOR ABOVE ITEM.		EA			REF	REF	REF			76	44
			4730-809-5999	MS24395D16 <96906>	.TEE,TUBE.....		EA		1	*	*	*		*	76	45
			5310-208-4112	MS24400D16 <96906>	.NUT,PLAIN,HEXAGON.....		EA		1	*	*	*		*	76	46
			5330-804-5694	AN6290-16 <88044>	.PACKING,PREFORMED.....		EA		1	REF	REF	REF		*	76	47
X2	F			S1630-63030-3 <78286>	.BRACKET ASSEMBLY.....		EA		1						76	48
					ATTACHING PARTS											
			5306-182-1526	AN4H6 <88044>	.BOLT,MACHINE.....		HD		2	*	*	*		*	76	49
			5310-187-2354	AN960PD416 <88044>	.WASHER,FLAT.....		HD		6	*	*	*		*	76	
					---*---											
MF	F			S1630-63030-4 <78286>	..BRACKET.....		EA		1						76	50
					MAKEFR											
					AR 9535-554-1413 AL ALLY SH											
			5310-728-5510	MS21078-3 <96906>	..NUT,SELF-LOCKING,PLATE.....		EA		2	*	*	*		*	76	52
			4730-684-6915	MS24392D8 <96906>	.NIPPLE,TUBE.....		EA		1	*	*	REF	REF	*	76	53
			5330-808-0794	MS28778-8 <96906>	.PACKING,PREFORMED.....		EA		1	REF	REF	REF		*	76	54
P	F		1560-611-3482	S1630-63006-13 <78286>	.COVER ASSEMBLY-RH.....		EA		1	*	*	*		*	76	55
					ATTACHING PARTS											
			5306-182-1926	AN4H5 <88044>	.BOLT,MACHINE.....		HD		22	*	*	*		*	76	56
			5310-184-9001	AN960PD416L <88044>	.WASHER,FLAT.....		HD		22	*	*	*		*	76	
					---*---											
P	F		1560-340-6783	S1630-63029 <78286>	.GASKET,FUEL TANK		EA		1	REF	REF	REF		REF	76	57
			4730-289-0786	AN756D24 <88044>	.FLANGE.....		EA		1	*	*	*		*	76	58
					ATTACHING PARTS											
			5306-182-1961	AN4H13A <88044>	.BOLT,MACHINE.....		HD		4	*	*	*		*	76	59
P	F		5330-580-5327	110 1-4 <86579>	.PACKING WITH RETAINER.....		EA		4	*	*	*		REF	76	
					---*---											
			4730-640-5053	MS20762D24 <96906>	.ELBOW,TUBE.....		EA		1	*	*	*		*	76	60
			5330-171-6945	AN763-24 <88044>	.GASKET.....		EA		1	REF	REF	REF		*	76	61
X2	O			S1620-62162 <78286>	.SPACER,OIL CELL INSTRUMENT..		EA		1						76	62
			1560-334-6360	S1630-63011 <78286>	.FITTING ASSEMBLY RPL-BY....		EA			*	*	*			76	
					1560-590-0369											
P	O		1560-590-0369	S1630-63038-5 <78286>	.FITTING ASSEMBLY RPLS--....		EA		1	*	*	*		REF	76	63

(1) SOURCE, MAINT AND REC CODE (a) SOURCE CODE	(b) MAINT LEVEL	(c) REC CODE	(2) FEDERAL STOCK NUMBER	REFERENCE NUMBER	(3) DESCRIPTION	MODELS USABLE ON CH-34C	(4) UNIT OF ME	(5) QTY INC IN UNIT OF ISSUE PACK	(6) QTY INC IN UNIT	(7) 30-DAY DS GS MAINT ALW (a) 1-20	(b) 21-50	(c) 51-100	(8) 1-YR ALW PER 100 EQUIP CNTGCY	(9) DEPOT MAINT ALW PER 100 EQUIP	(10) ILLUSTRATION (a) FIG NO	(b) ITEM NO
					CONTINUED										76	63
					1560-334-6360,											
					1560-625-9366											
			4730-639-9023	AN760D24	<88044> .ADAPTER,STRAIGHT,PIPE.....		EA		1	*	*	*		*	76	64
					TO TUBE											
					ATTACHING PARTS											
			5306-182-1528	AN4H10	<88044> .BOLT,MACHINE.....		HD		4	*	*	*		*	76	65
P	F		5330-580-5327	110 1-4	<86579> .PACKING-WITH RETAINER.....		EA		4	*	*	*		REF	76	
					---*---											
			5330-171-6945	AN763-24	<88044> .GASKET.....		EA		1	REF	REF	REF		*	76	66
P	F		1560-592-0603	S1630-63037-5	<78286> .FITTING ASSEMBLY RPLS--....		EA		1	*	*	*		REF	76	67
					1560-333-7046,											
					1560-625-9365											
P	F		5330-226-1833	S1630-63003-25	<78286> .GASKET.....		EA		2	*	*	*		REF	76	68
P	F		1650-203-6321	S1630-63045	<78286> .COCK,POPPET DRAIN RPLS--...		EA		1	*	REF	REF		REF	76	69
					1560-626-7211											
			5330-804-5695	MS28778-6	<96906> .PACKING,PREFORMED.....		EA		1	REF	REF	REF		*	76	70
P	F		1560-570-0647	S1630-63010	<78286> .PLATE,OIL SUMP FITTING.....		EA		1	*	*	REF		REF	76	71
					ATTACHING PARTS											
			5306-182-1526	AN4H6	<88044> .BOLT,MACHINE.....		HD		4	*	*	*		*	76	72
P	F		5330-580-5327	110 1-4	<86579> .PACKING-WITH RETAINER.....		EA		4	*	*	*		REF	76	
					---*---											
P	O		1560-590-0368	S1630-63041-5	<78286> .FITTING ASSEMBLY RPLS--....		EA		1	*	*	*		REF	76	73
					1560-333-7045,											
					1560-625-9367											
P	F		1560-663-4465	S1630-62036	<78286> .GASKET.....		EA		1	REF	REF	REF		REF	76	74
P	F		1560-028-1024	2F1-4-18295-2	<73842> .TANK,LUBRICATING OIL.....		EA		1	*	*	*	5	*	76	75
P	H		2995-765-5527	RA22168	<51663> PARTS KIT,PUMP-OVERHAUL.....		EA		1	*	*	*		*	76	
					U/O 2915-632-9181 SEE											
					FUNCTIONAL GROUP 50											
					FOR COMPONENTS											
P	H		2995-765-5528	RA22169	<51663> PARTS KIT,PUMP <CURE DATE>...		EA		1	*	*	*		*	76	
					U/O 2915-632-9181 SEE											
					FUNCTIONAL GROUP 50											
					FOR COMPONENTS											
P	H		2995-766-8662	RA22170	<51663> REPAIR KIT,MOTOR.....		EA		1	*	*	*		*	76	
					U/O 2915-632-9181 SEE											
					FUNCTIONAL GROUP 50											
					FOR COMPONENTS											
		R	2995-632-9181	RG6100H	<51663> PUMP,ROTARY,POWER DRIVEN.....		EA		1						76B	
					SEE FIG.76 FOR NHA											
P	H		2810-203-8307	RG5530V	<51663> .PUMP ASSEMBLY SEE FIG.76B..		EA		1	*	*	*		*	76B	1
					<SHEET 2 OF 2> FOR											
					BREAKDOWN											
					ATTACHING PARTS											
			5310-088-0553	MS21044N5	<96906> .NUT,SELF-LOCKING,HEXAGON....		HD		4	*	*	*		*	76B	2

(1) SOURCE, MAINT AND REC CODE (a) SOURCE CODE	(b) MAINT LEVEL	(c) RECOV CODE	(2) FEDERAL STOCK NUMBER	REFERENCE NUMBER		(3) DESCRIPTION	MODELS USABLE ON CH-34C	(4) UNIT OF ISSUE	(5) QTY INC IN UNIT PACK	(6) QTY INC IN UNIT	(7) 30-DAY DS/GS MAINT ALW (a) 1-20	(b) 21-50	(c) 51-100	(8) 1-YR ALW PER 100 EQUIP CNTGCY	(9) DEPOT MAINT ALW PER 100 EQUIP	(10) ILLUSTRATION (a) FIG NO	(b) ITEM NO
			5310-167-0820	AN960-516	<88044>	.WASHER,FLAT.....NOTE 2		HD		4	*	*	*		*	76B	3
						---*---											
				RB7405-29	<51663>	.CAP.....NOTE 2		EA		1						76B	4
X2	H			5513599	<72560>	.MOTOR ASSEMBLY.....		EA		1						76B	5
P	H		2915-315-8427	RA7627	<51663>	.LOCKNUT ASSEMBLY.....		EA		1	*	*	*		*	76B	6
						ATTACHING PARTS											
			5305-281-2607	AN565B8H3	<88044>	.SETSCREW.....NOTE 2		EA		1	*	*	*		*	76B	7
						---*---											
			5330-050-1224	AN6227B13	<88044>	.PACKING,PREFORMED.....NOTE 1		EA		1	*	*	*		*	76B	8
				RA8933	<51663>	.WASHER,KEY.....NOTE 2		EA		1						76B	9
P	H		2915-376-6881	RA8934	<51663>	.PLATE,SEAL.....		EA		1	*	*	*		*	76B	10
			5330-350-9013	MS29513-112	<96906>	.PACKING,PREFORMED.....NOTE 1		EA		1	*	*	*		*	76B	11
P	H		2915-373-8778	RB8935	<51663>	.COUPLING.....		EA		1	*	*	*		*	76B	12
P	H		2915-373-8767	RA5381	<51663>	.SPRING,SEAL,FUEL PUMP.NOTE 2		EA		1	*	*	*		*	76B	13
P	H		2915-373-8766	RA5299	<51663>	.SEAT.....NOTE 2		EA		1	*	*	*		*	76B	14
			5330-297-9990	MS28775-222	<96906>	.PACKING,PREFORMED.....NOTE 1		EA		1	*	*	*		*	76B	15
				RA7608	<51663>	.BEARING,SLEEVE.....NOTE 2		EA		1						76B	16
P	H		2995-335-7146	RB8376	<51663>	.ROTOR.....		EA		1	*	*	*		*	76B	17
P	H		2995-098-2214	RA8377	<51663>	.BLADE.....		EA		4	*	*	*		*	76B	18
P	H		2915-167-2524	RB5543	<51663>	.LINER.....		EA		1	*	*	*		*	76B	19
						ATTACHING PARTS											
			5305-959-3610	MS35277-41	<96906>	.SCREW,MACHINE.....		EA		1	*	*	*		*	76B	20
P	H		5330-202-1521	RB8358-515-8	<51663>	.PACKING WITH RETAINER.NOTE 1		EA		1	*	*	*		*	76B	21
				RA7608	<51663>	.BEARING,SLEEVE.....NOTE 2		EA		1						76B	22
P	H		2915-037-8911	RA5237	<51663>	.PLUG,PIPE.....NOTE 2		EA		1	*	*	*		*	76B	23
			4730-188-3509	MS20913-1	<96906>	.PLUG,PIPE.....NOTE 2		EA		3	3	7	15		*	76B	24
				RB15259-6	<51663>	.PLUG.....NOTE 2		EA		2						76B	25
				RB8357	<51663>	.PLATE,IDENTIFICATION..NOTE 2		EA		1						76B	26
						ATTACHING PARTS											
			5305-253-5603	MS21318-1	<96906>	.SCREW,DRIVE.....NOTE 2		HD		4	*	*	*		*	76B	27
						---*---											
X2	H			RG10352	<51663>	.BODY,PUMP.....		EA		1						76B	28
P	H		2995-765-5528	RA22169	<51663>	PARTS KIT,PUMP,CURE U/O.....		EA		1	*	*	*		*	76B	
						2915-632-9181 SEE											
						FUNCTIONAL GROUP 50 FOR											
						COMPONENTS											
P	H		2995-765-5527	RA22168	<51663>	PARTS KIT,PUMP,OVERHAUL.....		EA		1	*	*	*		*	76B	
						U/O 2915-632-9181 SEE											
						FUNCTIONAL GROUP 50 FOR											
						COMPONENTS											
						NOTE 1											
						COMPONENT OF KIT											
						2995-765-5528											
						NOTE 2											
						COMPONENT OF KIT											
						2995-765-5527											

(1) SOURCE, MAINT AND REC CODE (a) SOURCE CODE	(b) MAINT LEVEL	(c) RECVEL CODE	(2) FEDERAL STOCK NUMBER	REFERENCE NUMBER	(3) DESCRIPTION	MODELS USABLE ON CH-34C	(4) UNIT OF ISSUE	(5) QTY INC IN UNIT PACK	(6) QTY INC IN UNIT	(7) 30 DAY DS GS MAINT ALW (a) 1-20	(b) 21-50	(c) 51-100	(8) 1-YR ALWPER 100 EQUIP CNTGCY	(9) DEPOT MAINT ALWPER 100 EQUIP	(10) ILLUSTRATION (a) FIG NO	(b) ITEM NO
				S1630-62400-4 <78286>	FUEL SYSTEM INSTALLATION..... SEE FIG.40 FOR NHA										77	
			4720-633-6493	S1630-80603-31 <78286>	.HOSE ASSEMBLY RPL-BY..... 4720-780-2860										77	
MF	O			4720EG003-6C0540 <81996>	.HOSE ASSEMBLY,..... TETRAFLUOROETHYLENE MAKEFR AR 4720-857-1731 HOSE 2 EA 4730-952-5529 NIPPLE 2 EA 4730-967-9515 SOCKET 2 EA 4730-967-9523 SLEEVE 2 EA 5340-988-6032 DUST PLUG		EA		1						77	1
P	O		4730-958-8194	1-160-317-01 <91547>	.BOLT,FLUID PASSAGE.....		EA		1	*	*	*	5	REF	77	2
P	F		4730-613-9717	015501S5-6D <00624>	.COUPLING,HALF.....		EA		1	*	*	*		*	77	
P	O		1560-765-8713	S1630-62055-89 <78286>	.TUBE ASSEMBLY.....		EA		1	*	*	*		*	77	3
MF	F			S1630-62055-71 <78286>	.TUBE ASSEMBLY,METAL..... RPLS-- 1560-767-7965 MAKEFR AR 4710-277-3627 TUBING 2 EA 4730-142-2167 NUT 2 EA 4730-287-0067 SLEEVE		EA		1						77	4
			4730-142-2167	AN818-6D <88044>	..NUT,TUBE COUPLING.....		EA		2	*	*	*		*	77	5
			4730-278-6070	MS20819-6D <96906>	..SLEEVE,FLARED TUBE FITTING.		EA		2	*	*	*		*	77	6
			5330-263-8030	MS29512-6 <96906>	.PACKING,PREFORMED.....		EA		1	2	3	6	72	*	77	
MF	O			4720EG003-6C0530 <81996>	.HOSE ASSEMBLY,..... TETRAFLUOROETHYLENE MAKEFR AR 4720-857-1731 HOSE 2 EA 4730-952-5529 NIPPLE 2 EA 4730-967-9515 SOCKET 2 EA 4730-967-9523 SLEEVE 2 EA 5340-988-6032 DUST PLUG		EA		1						77	8
MF	O			4720EG003-4C0390 <81996>	.HOSE ASSEMBLY,..... TETRAFLUOROETHYLENE MAKEFR AR 4720-857-1732 HOSE 2 EA 4730-952-5532 NIPPLE 2 EA 4730-967-9513 SOCKET 2 EA 4730-967-9521 SLEEVE 2 EA 5340-834-8330 DUST PLUG		EA		1						77	
			5310-282-7823	MS24400D4 <96906>	.NUT,PLAIN,HEXAGON.....		LL		1	*	*	*		*	77	9
			5330-250-0230	MS29513-22 <96906>	.PACKING,PREFORMED.....		EA		1	*	2	2		*	77	
			4730-278-9383	AN804-4 <88044>	.TEE,TUBE.....		EA		1	*	*	*		*	77	
P	F		1560-633-6980	S1630-63033-3 <78286>	.RESTRICTOR ASSEMBLY.....		EA		1	*	*	*		*	77	10
P	O		4730-541-8997	015501S5-4D <00624>	.COUPLING,HALF,SELF-SEALING..		EA		1	2	2	4	48	*	77	11
P	O		4720-795-0592	R348EC0C4-0390 <50599>	.HOSE ASSEMBLY,RUBBER..... SYNTHETIC		EA		1					*	77	12
			5330-805-2966	MS28778-4 <96906>	.PACKING,PREFORMED.....		EA		1	REF	REF	REF	REF	*	77	13
			4730-834-9560	MS24392D4 <96906>	.NIPPLE,TUBE.....		EA		1	REF	REF	REF	REF	*	77	
P	O		4730-541-8997	015501S5-4D <00624>	.COUPLING,HALF,SELF-SEALING..		EA		1	REF	REF	REF	REF	REF	77	14
AF	F			S1630-62153-1 <78286>	.SUPPORT ASSEMBLY,FUEL..... ATTACHING PARTS		EA		1						77	15

(1) SOURCE, MAINT AND REC CODE (a) SOURCE CODE	(b) MAINT LEVEL	(c) REC CODE	(2) FEDERAL STOCK NUMBER	REFERENCE NUMBER	(3) DESCRIPTION	MODELS USABLE ON CH-34C	(4) UNIT OF ISSUE	(5) QTY INC IN UNIT PACK	(6) QTY INC IN UNIT	(7) 30-DAY DS/GS MAINT ALW (a) 1-20	(b) 21-50	(c) 51-100	(8) 1-YR ALW PER 100 EQUIP CNTGCY	(9) DEPOT MAINT ALW PER 100 EQUIP	(10) ILLUSTRATION (a) FIG NO	(b) ITEM NO
			5305-984-6195	MS35206-247	<96906> .SCREW,MACHINE.....				4	*	*	*		*	77	16
			5310-184-9002	AN960PD8L	<88044> .WASHER,FLAT.....		HD		8	*	*	*		*	77	
			5310-167-0889	AN8013D1	<88044> .WASHER,FLAT.....		EA		8	*	*	*		*	77	
			5310-807-1466	S21042-08	<96906> .NUT EXTENDED WASHER.....				4					*	77	
					---*---											
			6620-526-7887	ST4D	<61349> .TRANSMITTER,PRESSURE..... RPL-BY 6620-553-8986										77	
			6685-223-6753	4150-3B3	<19315> .TRANSMITTER,PRESSURE..... RPL-BY 6620-553-8986										77	
P	O		6620-553-8986	MS28005-3	<96906> ..TRANSMITTER,PRESSURE..... RPLS-- 6620-526-7887, 6685-223-6753 ATTACHING PARTS		EA		1	REF	REF	REF	REF	REF	77	17
			5305-984-4988	MS35206-228	<96906> ..SCREW,MACHINE.....				4	*	*	*		*	77	18
			5310-187-2398	AN960PD6L	<88044> ..WASHER,FLAT.....		HD		4	*	*	*		*	77	
			5310-184-8977	MS35338-98	<96906> ..WASHER,LOCK.....		MX		4	*	*	*		*	77	
					---*---											
			6620-224-3478	7500-15A5A	<19315> ..TRANSMITTER-FUEL PRESSURE.. RPL-BY 6620-553-8988										77	
			6620-228-4360	1228-041040	<89944> ..TRANSMITTER-FUEL PRESSURE.. RPL-BY 6620-553-8988										77	
			6620-515-5709	7709-15A5-1	<06840> ..TRANSMITTER-FUEL PRESSURE.. RPL-BY 6620-553-8988										77	
			6620-526-7867	7706-16-16-1	<19315> ..TRANSMITTER-FUEL PRESSURE.. RPL-BY 6620-553-8988										77	
			6620-526-7870	7700-15A5-1A	<06840> ..TRANSMITTER-FUEL PRESSURE.. RPL-BY 6620-553-8988										77	
			6620-758-1917	7500-15A5-3A	<06840> ..TRANSMITTER-FUEL PRESSURE.. RPL-BY 6620-553-8988										77	
			6620-663-8541	ST6B	<61349> ..TRANSMITTER-FUEL PRESSURE.. RPL-BY 6620-553-8988										77	
			6685-228-4361	7500-15A5	<19315> ..TRANSMITTER-FUEL PRESSURE.. RPL-BY 6620-553-8988										77	
			6685-663-5729	7700-15A5-2	<19315> ..TRANSMITTER-FUEL PRESSURE.. RPL-BY 6620-553-8988										77	
P	O		6620-553-8988	7709-15B5-1	<02987> ..TRANSMITTER-FUEL PRESSURE.. RPLS-- 6620-224-3478, 6620-228-4360, 6620-515-5709, 6620-526-7867, 6620-526-7870, 6620-663-8541 6620-758-1917 6685-228-4361, 6685-520-8429,& 6685-663-5729 ATTACHING PARTS		EA		1	*	*	2	7	*	77	19
			5305-687-6724	AN503-6-6	<88044> ..SCREW,MACHINE.....		HD		2	*	*	*		*	77	20
			5310-187-2398	AN960PD6L	<88044> ..WASHER,FLAT.....		HD		2	*	*	*		*	77	
			5310-184-8977	MS35338-98	<96906> ..WASHER,LOCK.....		MX		2	*	*	*		*	77	
			5305-984-4988	MS35206-228	<96906> ..SCREW,MACHINE.....				2	*	*	*		*	77	21
			5310-187-2398	AN960PD6L	<88044> ..WASHER,FLAT.....		HD		2	*	*	*		*	77	

SOURCE CODE (a)	MAINT LEVEL (b)	REC CODE (c)	FEDERAL STOCK NUMBER	REFERENCE NUMBER		DESCRIPTION	MODELS USABLE ON CH-34C	UNIT OF ISSUE	QTY INC IN UNIT PACK	QTY INC IN UNIT	30-DAY DEPOT MAINT REQ (a) 1-20	(b) 21-50	(c) 51-100	1-YR ALW PER 100 EQUIP CNTGCY	DEPOT MAINT ALW PER 100 EQUIP	FIG NO	ITEM NO
			5310-184-8977	MS35338-98	<96906>	..WASHER,LOCK.....		MX		2	*	*	*		*	77	
						---*---											
X2	F		1560-673-7718	S1630-62154-4	<78286>	..BRACKET ASSEMBLY.....		EA		1	*	*	*		*	77	22
			5340-200-7566	AN8008D3	<88044>	.MOUNT,RESILIENT.....		EA		4	*	*	*		*	77	23
						ATTACHING PARTS											
			5305-984-4988	MS35206-228	<88044>	.SCREW,MACHINE.....				16	*	*	*		*	77	24
			5310-187-2398	AN960PD6L	<88044>	.WASHER,FLAT.....		HD		16	*	*	*		*	77	
			5310-905-8451	MS21083N06	<96906>	.NUT,SELF-LOCKING,HEXAGON....		HD		16	*	*	*		*	77	
						---*---											
MF	O			4720EG007-12-0240	<81996>	.HOSE ASSEMBLY,.....		EA		1						77	25
						TETRAFLUOROETHYLENE											
						NOTE 1											
MF	O			4720EG007-16Z024	<81996>	.HOSE ASSEMBLY,.....		EA		1						77	
						TETRAFLUOROETHYLENE											
						NOTE 1											
P	O		4720-593-3811	S1630-80603-25	<78286>	.HOSE ASSEMBLY.....		EA		1	*	*	*		*	77	
P	O		4730-683-8454	01450155-16D	<00624>	.COUPLING,HALF.....		EA		1	*	2	2	22	*	77	27
			1560-709-8620	S1630-62055-39	<78286>	.TUBE ASSEMBLY RPL-BY.....										77	
						1560-783-5231											
P	O		1560-783-5231	S1630-62055-59	<78286>	.TUBE ASSEMBLY,METAL.....		EA		1	*	*	*		*	77	28
						RPLS-- 1560-709-8620											
MF	O			4720EG003-16Z0130	<81996>	.HOSE ASSEMBLY.....		EA		1						77	29
						TETRAFLUOROETHYLENE											
						NOTE 1											
P	F		1560-707-3319	S1630-62055-33	<78286>	.TUBE ASSEMBLY.....		EA		1	*	*	*		*	77	30
P	F		1560-625-8726	R21146	<50599>	.HOSE ASSEMBLY.....		EA		1	*	*	*		*	77	
P	F		1560-707-3318	S1630-62055-31	<78286>	.TUBE ASSEMBLY.....		EA		1	*	*	*		*	77	31
P	O		1560-632-4420	S1630-62055-63	<78286>	.TUBE ASSEMBLY,METAL.....		EA		1	*	*	*		*	77	
AF	F			S1630-62020-2	<78286>	.VALVE AND STRAINER.....		EA		1						77	32
						ASSEMBLY-SELECTOR SEE											
						FIG.78 FOR BREAKDOWN											
						ATTACHING PARTS											
			5306-182-2058	AN3H5A	<88044>	.BOLT,MACHINE.....		EA		2	*	*	*		*	77	33
			5310-167-0753	AN960PD10L	<88044>	.WASHER,FLAT.....		HD		2	*	*	*		*	77	
			5306-282-4312	AN3H4	<88044>	.BOLT,MACHINE.....		HD		6	*	*	*		*	77	34
			5310-167-0753	AN960PD10L	<88044>	.WASHER,FLAT.....		HD		6	*	*	*		*	77	
			5306-559-8136	AN3H25	<88044>	.BOLT,MACHINE.....		EA		2	*	*	*		*	77	35
			5310-167-0753	AN960PD10L	<88044>	.WASHER,FLAT.....		HD		2	*	*	*		*	77	
						---*---											
P	O		1560-558-2487	S1630-62065	<78286>	.GASKET.....		EA		1	*	*	*		*	77	36
			1560-707-3316	S1630-62055-27	<78286>	.TUBE ASSEMBLY,METAL.....										77	
						RPL-BY 1560-632-4414											
P	F		1560-632-4414	S1630-62055-61	<78286>	.TUBE ASSEMBLY,METAL.....		EA		1	*	*	*		*	77	37
						RPLS-- 1560-707-3316											
			4730-828-9981	MS24402D16	<96906>	.TEE,TUBE.....		EA		1	*	*	*		*	77	38
P	F		1560-707-3317	S1630-62055-29	<78286>	.TUBE ASSEMBLY,METAL.....		EA		1	*	*	*		*	77	39
P	F		4820-580-8687	1111-517706	<92003>	.VALVE,CHECK.....		EA		1	*	*	*		*	77	40
			5330-263-8034	MS29512-16	<96906>	.PACKING,PREFORMED.....		EA		1	*	*	2		*	77	41
P	F		1560-707-3315	S1630-62055-23	<78286>	.TUBE ASSEMBLY,METAL.....		EA		1	*	*	*		*	77	42
			4730-828-9981	MS24402D16	<96906>	.TEE,TUBE.....		EA		1	*	*	*		*	77	43
P	F		1560-708-2227	S1630-62055-25	<78286>	.TUBE ASSEMBLY.....		EA		1	*	*	*		*	77	44
P	F		4820-580-8687	1111-517706	<92003>	.VALVE,CHECK.....		EA		2	*	*	*		REF	77	45

(1) SOURCE, MAINT AND RFC CODE (a) SOURCE CODE	(b) MAINT LEVEL	(c) RFC CODE	(2) FEDERAL STOCK NUMBER	REFERENCE NUMBER		(3) DESCRIPTION	MODELS USABLE ON CH-34C	(4) UNIT OF ISSUE	(5) QTY INC IN UNIT PACK	(6) QTY INC IN UNIT	(7) 30-DAY DS GS MAINT ALW (a) 1-20	(b) 21-50	(c) 51-100	(8) 1-YR ALWPER 100 EQUIP CNTGCY	(9) DEPOT MAINT ALWPER 100 EQUIP	(10) ILLUSTRATION (a) FIG NO	(b) ITEM NO
			5330-263-8034	MS29512-16	<96906>	.PACKING,PREFORMED.....		EA		2	*	*	REF		*	77	46
				S1630-62105-5	<78286>	.VENT INSTALLATION-FUEL.....				1						77	
			5340-993-6244	EAB700D10	<81996>	..CLAMP,LOOP.....		EA		12	*	*	*		*	77	47
						ATTACHING PARTS											
			5305-989-7434	MS35207-263	<96906>	..SCREW,MACHINE.....				12	*	*	*		*	77	48
			5310-183-4406	AN960PD10	<88044>	..WASHER,FLAT.....		HD		24	*	*	*		*	77	
			5310-877-5797	MS21044N3	<96906>	..NUT,SELF-LOCKING,HEXAGON...		EA		12	*	*	*		*	77	
						---*---											
MF	O			S1630-62056-135	<78286>	..TUBE ASSEMBLY.....NOTE 1		EA		1						77	51
MF	F			S1630-62056-131	<78286>	..TUBE ASSEMBLY.....NOTE 1		EA		1						77	52
MF	O			S1630-62056-137	<78286>	..TUBE ASSEMBLY.....NOTE 1		EA		1						77	53
P	F		1560-570-0646	S1630-62172-2	<78286>	..FITTING,VENT OUTLET,FUEL...		EA		1	*	*	*		*	77	54
P	F		1560-570-0646	S1630-62172-2	<78286>	..FITTING,VENT OUTLET,FUEL...		EA		1	*	*	*		REF	77	56
MF	O			S1630-62056-133	<78286>	..TUBE ASSEMBLY.....NOTE 1		EA		1						77	57
MF	O			S1630-62056-147	<78286>	..TUBE ASSEMBLY.....NOTE 1		EA		1						77	58
MF	O			S1630-62056-125	<78286>	..TUBE ASSEMBLY RPLS--.....		EA		1						77	59
						1560-772-0247 NOTE 1											
			4730-866-1829	MS24392D10	<96906>	..NIPPLE,TUBE.....		EA		1	8	20	40	480	*	77	60
MF	O			S1630-62056-113	<78286>	..TUBE ASSEMBLY.....		EA		1						77	61
P	F		1560-570-0646	S1630-62172-2	<78286>	..FITTING,VENT OUTLET,FUEL...		EA		1	*	*	*		REF	77	62
P	F		1560-570-0646	S1630-62172-2	<78286>	..FITTING,VENT OUTLET,FUEL...		EA		1	*	*	*		REF	77	64
						ATTACHING PARTS											
				MS20470B4	<96906>	..RIVET,SOLID.....		EA		6						77	
				MS20426B4	<96906>	..RIVET.....		EA		2						77	
						---*---											
MF	F			S1630-62056-155	<78286>	..TUBE ASSEMBLY.....NOTE 1		EA		1						77	65
			4730-866-1829	MS24392D10	<96906>	..NIPPLE,TUBE.....		EA		1	*	*	*		*	77	67
MF	O			S1630-62056-151	<78286>	..TUBE ASSEMBLY.....NOTE 1		EA		1						77	68
P	F		1560-570-0646	S1630-62172-2	<78286>	..FITTING,VENT OUTLET,FUEL...		EA		1	*	*	*		REF	77	69
X2	F			S1630-62066	<78286>	..HOOD.....		EA		1						77	72
MF	O			S1630-62056-75	<78286>	..TUBE ASSEMBLY.....NOTE 1		EA		1						77	73
MF	F			S1630-62056-71	<78286>	...TUBE ASSEMBLY.....NOTE 1		EA		1						77	74
MF	F			S1630-62056-71	<78286>	..TUBE ASSEMBLY.....NOTE 1		EA		1						77	
P	F		1560-570-0646	S1630-62172-2	<78286>	..FITTING,VENT OUTLET,FUEL...		EA		1	*	*	*		REF	77	75
X2	F			S1630-62066	<78286>	..HOOD.....		EA		1						77	78
MF	O			S1630-62056-69	<78286>	..TUBE ASSEMBLY.....NOTE 1		EA		1						77	79
P	F		1560-570-0646	S1630-62172-2	<78286>	..FITTING,VENT OUTLET,FUEL...		EA		1	*	*	*		REF	77	80
X2	F			S1630-62066	<78286>	..HOOD.....		EA		1						77	83
MF	O			S1630-62056-159	<78286>	..TUBE ASSEMBLY.....NOTE 1		EA		1						77	84
MF	F			S1630-62056-161	<78286>	..TUBE ASSEMBLY RPLS--.....		EA		1						77	85
						1560-767-7966 NOTE 1											
P	F		2915-325-4559	305-02-2	<97485>	..DETECTOR,FUEL		EA		1	*	*	2		*	77	86
MF	F			S1630-62056-163	<78286>	..TUBE ASSEMBLY.....		EA		1						77	87
MF	F			S1630-62056-117	<78286>	..TUBE ASSEMBLY.....NOTE 1		EA		1						77	88
P	F		1560-570-0646	S1630-62172-2	<78286>	..FITTING,VENT OUTLET,FUEL...		EA		1	*	*	*		REF	77	89
MF	F			S1630-62056-85	<78286>	..TUBE ASSEMBLY.....NOTE 1		EA		1						77	91
MF	F			S1630-62056-157	<78286>	..TUBE ASSEMBLY.....		EA		1						77	92
						MAKEFR											
						AR 4710-278-8740 TUBE											
						2 EA 4730-277-5358 SLEEVE											
						2 EA 4730-287-0290 NUT											
MF	F			S1630-62056-119	<78286>	..TUBE ASSEMBLY.....NOTE 1		EA		1						77	93

(1) SOURCE, MAINT AND REC CODE (a) SOURCE CODE	(b) MAINT LEVEL	(c) REC CODE	(2) FEDERAL STOCK NUMBER	REFERENCE NUMBER		(3) DESCRIPTION	MODELS USABLE ON CH-34C	(4) UNIT OF ISSUE	(5) QTY INC IN UNIT PACK	(6) QTY INC IN UNIT	(7) 30-DAY DS GS MAINT ALW (a) 1-20	(b) 21-50	(c) 51-100	(8) 1-YR ALW PER 100 EQUIP CNTGCY	(9) DEPOT MAINT ALW PER 100 EQUIP	(10) ILLUSTRATION (a) FIG NO	(b) ITEM NO
P	F		1560-570-0646	S1630-62172-2	<78286>	..FITTING,VENT OUTLET,FUEL...		EA		1	*	*	*		REF	77	94
MF	F			S1630-62056-97	<78286>	..TUBE ASSEMBLY.....		EA		1						77	96
						MAKEFR											
						AR 4710-277-3627 TUBE											
						2 EA 4730-287-0067 SLEEVE											
						2 EA 4730-287-0285 NUT											
			4730-866-1829	MS24392D10	<96906>	..NIPPLE,TUBE.....		EA		1	*	*	*		*	77	97
MF	F			S1630-62056-95	<78286>	..TUBE ASSEMBLY.....NOTE 1		EA		1						77	98
P	F		1560-570-0646	S1630-62172-2	<78286>	..FITTING,VENT OUTLET,FUEL...		EA		1	*	*	*		REF	77	99
MF	F			S1630-62056-187	<78286>	..TUBE ASSEMBLY.....		EA		1						77	101
						MAKEFR											
						AR 4710-278-8740 TUBE											
						2 EA 4730-277-5358 NUT											
						2 EA 4730-287-0290 SLEEVE											
			4730-866-1829	MS24392D10	<96906>	..NIPPLE,TUBE.....		EA		1	*	*	*		*	77	102
MF	F			S1630-62056-185	<78286>	..TUBE ASSEMBLY.....NOTE 1		EA		1						77	103
P	F		1560-570-0646	S1630-62172-2	<78286>	..FITTING,VENT OUTLET,FUEL...		EA		1	*	*	*		REF	77	104
MF	F			S1630-62056-141	<78286>	..TUBE ASSEMBLY RPLS--.....		EA		1						77	106
						1560-767-7959 NOTE 1											
MF	F			S1630-62056-143	<78286>	..TUBE ASSEMBLY.....NOTE 1		EA		1						77	107
P	F		1560-570-0646	S1630-62172-2	<78286>	..FITTING,VENT OUTLET,FUEL...		EA		1	*	*	*		REF	77	108
X2	F			S1630-62066	<78286>	..HOOD.....		EA		1						77	111
MF	F			S1630-62056-145	<78286>	..TUBE ASSEMBLY.....NOTE 1		EA		1						77	112
P	F		1560-570-0646	S1630-62172-2	<78286>	..FITTING,VENT OUTLET,FUEL...		EA		1	*	*	*		REF	77	113
X2	F			S1630-62066	<78286>	..HOOD.....		EA		1						77	116
MF	F			S1630-62056-109	<78286>	..TUBE ASSEMBLY.....NOTE 1		EA		1						77	117
MF	F			S1630-62056-107	<78286>	..TUBE ASSEMBLY.....NOTE 1		EA		1						77	118
P	F		1560-570-0646	S1630-62172-2	<78286>	..FITTING,VENT OUTLET,FUEL...		EA		1	*	*	*		REF	77	119
X2	F			S1630-62066	<78286>	..HOOD.....		EA		1						77	122
MF	F			S1630-62056-111	<78286>	..TUBE ASSEMBLY.....NOTE 1		EA		1						77	123
P	F		1560-570-0646	S1630-62172-2	<78286>	..FITTING,VENT OUTLET,FUEL...		EA		1	*	*	*		REF	77	124
X2	F			S1630-62066	<78286>	..HOOD.....		EA		1						77	127
				S1630-62401-2	<78286>	.FORWARD SELF-SEALING FUEL...				1						77	128
						CELL INSTALLATION SEE											
						FIG.79 FOR BREAKDOWN											
P	F		1560-544-0906	S1630-62204	<78286>	.CELL ASSEMBLY.....		EA		1	*	*	2	7	*	77	
P	F		1560-544-0907	S1630-62205	<78286>	.CELL ASSEMBLY.....		EA		1	*	*	2	10	*	77	
				S1630-62263-1	<78286>	.JUMPER INSTALLATION-BONDING.				1						77	
			6150-815-5125	MS25083-1BC4	<96906>	..JUMPER,BOND.....		EA		1	*	*	2		*	77	129
						ATTACHING PARTS											
			5305-558-8934	AN525D10R8	<88044>	..SCREW,MACHINE.....		HD		1	*	*	*		*	77	130
			5310-183-4406	AN960PD10	<88044>	..WASHER,FLAT.....		HD		1	*	*	*		*	77	
			5310-877-5797	MS21044N3	<96906>	..NUT,SELF-LOCKING,HEXAGON...		EA		1	*	*	*		*	77	
						---*---											
			6150-815-5125	MS25083-1BC4	<96906>	..JUMPER,BOND.....		EA		1	*	*	REF		*	77	131
						ATTACHING PARTS											
			5305-558-8934	AN525D10R8	<88044>	..SCREW,MACHINE.....		HD		1	*	*	*		*	77	132
			5310-183-4406	AN960PD10	<88044>	..WASHER,FLAT.....		HD		1	*	*	*		*	77	
			5310-877-5797	MS21044N3	<96906>	..NUT,SELF-LOCKING,HEXAGON...		EA		1	*	*	*		*	77	
						---*---											
				S1630-62402-1	<78286>	.CENTER PLIOCEL FUEL CELL....				1						77	133
						INSTALLATION SEE FIG.80											

(1) SOURCE MAINT AND REC CODE (a) SOURCE CODE	(b) MAINT LEVEL	(c) REC CODE	(2) FEDERAL STOCK NUMBER	REFERENCE NUMBER	(3) DESCRIPTION	MODELS USABLE ON CH-34C	(4) UNIT OF ISSUE	(5) QTY INC IN UNIT PACK	(6) QTY INC IN UNIT	(7) 30-DAY DS GS MAINT ALW (a) 1-20	(b) 21-50	(c) 51-100	(8) 1-YR ALW PER 100 EQUIP CNTGCY	(9) DEPOT MAINT ALW PER 100 EQUIP	(10) ILLUSTRATION (a) FIG NO	(b) ITEM NO
					CONTINUED										77	133
					FOR BREAKDOWN											
				S1630-62403-1 <78286>	.AFT PLIOCEL FUEL CELL.....				1						77	134
					INSTALLATION SEE FIG.81											
					FOR BREAKDOWN											
					NOTE 1											
					TUBE ASSEMBLY											
					AR 4710-278-8740 TUBE											
					2 EA 4730-277-5358 NUT											
					2 EA 4730-287-1028 SLEEVE											
AF	F			S1630-62020-2 <78286>	VALVE AND STRAINER ASSEMBLY..		EA								78	
					SELECTOR SEE FIG.77 FOR											
					NHA											
P	F		2915-323-4284	S1630-62129 <78286>	.FITTING,FUEL STRAINER.....		EA		1	*	*	*		*	78	1
					ATTACHING PARTS											
			5310-167-0753	AN960PD10L <88044>	.WASHER,FLAT.....		HD		4	*	*	*		*	78	2
			5310-877-5797	MS21044N3 <96906>	.NUT,SELF-LOCKING,HEXAGON....		EA		4	*	*	*		*	78	
					---*---											
P	O		1560-559-6169	S1630-62044 <78286>	.GASKET.....		EA		1	*	*	*		*	78	3
			5310-282-7823	MS24400D4 <96906>	.NUT,PLAIN,HEXAGON.....		LL		1	*	*	*		*	78	4
			5330-250-0230	MS29513-22 <96906>	.PACKING,PREFORMED.....		EA		1	*	REF	REF		*	78	5
P	O		4820-203-3302	K9200A <75361>	.COCK,POPPET DRAIN.....		EA		1	*	*	*		*	78	6
			4730-277-6429	AN941D4 <88044>	.ELBOW,TUBE.....		EA		1	*	*	*		*	78	7
			5330-250-0230	MS29513-22 <96906>	.PACKING,PREFORMED.....		EA		1	*	REF	REF		*	78	8
			5310-282-7823	MS24400D4 <96906>	.NUT,PLAIN,HEXAGON.....		LL		1	*	*	*		*	78	9
			4730-715-0018	AN832-4D <88044>	.NIPPLE,TUBE.....		EA		1	*	*	*		*	78	10
			5330-250-0230	MS29513-22 <96906>	.PACKING,PREFORMED.....		EA		1	*	REF	REF		*	78	11
P	O		5340-817-0912	NAS818-4 <80205>	.PLUG,PROTECTIVE,DUST AND....		EA		2					*	78	
					MOISTURE SEAL											
			1560-327-3899	S1630-62021 <78286>	.CONNECTOR,SELECTOR VALVE....										78	
					RPL-BY 1560-592-5461											
P	F		1560-592-5461	S1630-62127 <78286>	.CONNECTOR,SELECTOR VALVE....		EA		1	*	*	*		*	78	12
					RPLS-- 1560-327-3899											
					ATTACHING PARTS											
			5310-167-0753	AN960PD10L <88044>	.WASHER,FLAT.....		HD		4	*	*	*		*	78	13
			5310-877-5797	MS21044N3 <96906>	.NUT,SELF-LOCKING,HEXAGON....		EA		4	*	*	*		*	78	
			5305-150-9215	AN503-10-26 <88044>	.SCREW,MACHINE.....		HD		2	*	*	*		*	78	14
			5310-167-0753	AN960PD10L <88044>	.WASHER,FLAT.....		HD		2	*	*	*		*	78	
			5305-145-7017	AN503-10-8 <88044>	.SCREW,MACHINE.....		HD		2	*	*	*		*	78	15
			5310-167-0753	AN960PD10L <88044>	.WASHER,FLAT.....		HD		2	*	*	*		*	78	
					---*---											
P	O		1560-559-6169	S1630-62044 <78286>	.GASKET.....		EA		1	*	*	*		REF	78	16
			4730-287-0095	AN814-30L <88044>	.PLUG,MACHINE THREAD.....		EA		1	4	10	20		*	78	17
			5330-263-8011	MS29512-3 <96906>	.PACKING,PREFORMED.....		EA		1	4	10	20	240	*	78	18
			4730-837-0856	MS24391D4L <96906>	.PLUG,MACHINE,THREADED.....		EA		1	*	*	*	REF	*	78	19

(1) SOURCE, MAINT AND REC CODE (a) SOURCE CODE	(b) MAINT LEVEL	(c) REC CODE	(2) FEDERAL STOCK NUMBER	REFERENCE NUMBER		(3) DESCRIPTION	MODELS USABLE ON CH-34C	(4) UNIT OF ISSUE	(5) QTY INC IN UNIT PACK	(6) QTY INC IN UNIT	(7) 30-DAY DS/GS MAINT ALW (a) 1-20	(b) 21-50	(c) 51-100	(8) 1-YR ALW PER 100 EQUIP CNTGCY	(9) DEPOT MAINT ALW PER 100 EQUIP	(10) ILLUSTRATION (a) FIG NO	(b) ITEM NO
			5330-250-0230	MS29513-22	<96906>	.PACKING,PREFORMED.....		EA		1	*	REF	REF		*	78	20
P	O		2915-328-3104	U959	<78943>	.STRAINER,SEDIMENT.....		EA		1	*	*	*		*	78	21
						ATTACHING PARTS											
			5306-182-2016	AN4H5A	<88044>	.BOLT,MACHINE.....		HD		2	*	*	*		*	78	22
			5310-187-2354	AN960PD416	<88044>	.WASHER,FLAT.....		HD		4	*	*	*		*	78	
			5310-877-5796	MS21044N4	<96906>	.NUT,SELF-LOCKING,HEXAGON....		EA		2	*	*	*		*	78	
						---*---											
P	O		2915-508-6169	U2596-1	<78943>	..SCREEN ASSEMBLY,FUEL.....		EA		1	*	*	2		*	78	
						STRAINER											
			5310-063-6716	MS35426-14	<96906>	..NUT,PLAIN,WING.....		EA		2	12	12	12		*	78	
P	H		2915-508-6187	U896	<78943>	..CAP,FUEL STRAINER.....		EA		1	*	*	*		*	78	
P	O		2915-663-4655	U448-2	<78943>	..GASKET.....		EA		1	*	2	2		*	78	
P	D		4730-640-6451	U449-2	<78943>	..CLAMP,HOSE RPL-BY.....		EA		1	*	*	*		*	78	
						4730-725-0537											
P	O		4730-725-0537	820-20	<98625>	..CLAMP UNIVERSAL.....		EA		1	*	*	*		*	78	
			4730-329-7116	S1630-62037	<78286>	.ELBOW,TUBE RPL-BY.....										78	
						4730-323-4285											
P	F		4730-323-4285	S1630-62130	<78286>	.ELBOW,TUBE RPLS--.....		EA		1	*	*	*		*	78	23
						4730-329-7116											
						ATTACHING PARTS											
			5305-145-7017	AN503-10-8	<88044>	.SCREW,MACHINE.....		HD		4	*	*	*		*	78	24
			5310-167-0753	AN960PD10L	<88044>	.WASHER,FLAT.....		HD		4	*	*	*		*	78	
						---*---											
P	O		2915-203-7781	24902	<75361>	.COCK,POPPET DRAIN.....		EA		1	*	2	2		*	78	25
						ATTACHING PARTS											
			5306-182-2017	AN4H6A	<88044>	.BOLT,MACHINE.....		HD		2	*	*	*		*	78	26
			5310-184-9001	AN960PD416L	<88044>	.WASHER,FLAT.....		HD		4	*	*	*		*	78	
			5310-877-5796	MS21044N4	<96906>	.NUT,SELF-LOCKING,HEXAGON....		EA		2	*	*	*		*	78	
			5306-182-2016	AN4H5A	<88044>	.BOLT,MACHINE.....		HD		2	*	*	*		*	78	27
			5310-184-9001	AN960PD416L	<88044>	.WASHER,FLAT.....		HD		4	*	*	*		*	78	
						---*---											
P	D		2915-513-1329	2468A	<75361>	..SEAT ASSEMBLY,FUEL.....		EA		1					*	78	
P	F		1560-530-0839	S1630-62049	<78286>	.GASKET.....		EA		1	2	2	3		*	78	28
			1560-327-3900	S1630-62022	<78286>	.FITTING ASSEMBLY RPL-BY....										78	
						1560-589-4281											
P	F		1560-589-4281	S1630-62128	<78286>	.FITTING ASSEMBLY RPLS--....		EA		1	*	*	*		*	78	29
						1560-327-3900											
						ATTACHING PARTS											
			5305-145-7017	AN503-10-8	<88044>	.SCREW,MACHINE.....		HD		4	*	*	*		*	78	30
			5310-167-0753	AN960PD10L	<88044>	.WASHER,FLAT.....		HD		4	*	*	*		*	78	
						---*---											
P	F		1560-628-3759	S1630-61045-2	<78286>	.GEAR BOX ASSEMBLY,FUEL.....		EA		1	*	*	*		*	78	31
						SELECTOR RPLS--											
						1560-327-3883											
P	F		1560-625-9372	S1630-61139	<78286>	..COVER ASSEMBLY,GEAR BOX....		EA		1	*	*	*		*	78	32
						ATTACHING PARTS											
			5305-145-7016	AN503-10-6	<88044>	..SCREW,MACHINE.....		EA		3	*	*	*		*	78	33
			5310-167-0753	AN960PD10L	<88044>	..WASHER,FLAT.....		HD		3	*	*	*		*	78	
						---*---											
X1				S1630-61138-2	<78286>	...SHAFT ASSEMBLY,SELECTOR...		EA		1						78	
						VALVE-LOWER GEAR BOX											
						WHEN EXHTD RQTN NHA											

(1) SOURCE, MAINT AND REC CODE (a) SOURCE CODE	(b) MAINT CATEGORY	(c) REC CODE	(2) FEDERAL STOCK NUMBER	(3) DESCRIPTION REFERENCE NUMBER			MODELS USABLE ON CH-34C	(4) UNIT OF ISSUE	(5) QTY INC IN UNIT PACK	(6) QTY INC IN UNIT	(7) 30-DAY DS/GS MAINT ALW (a) 1-20	(b) 21-50	(c) 51-100	(8) 1-YR ALW PER 100 EQUIP CNTGCY	(9) DEPOT MAINT ALW PER 100 EQUIP	(10) ILLUSTRATION (a) FIG NO	(b) ITEM NO
						CONTINUED										78	
						1560-625-9372											
X1				S1630-61136	<78286>	...COVER,SELECTOR VALVE.....		EA		1						78	
X1				S1630-61147-2	<78286>	...SHAFT,SELECTION VALVE.....		EA		1						78	
P	H		1560-530-7303	S1630-61049	<78286>	..SHIM.....		EA		2	*	*	*		REF	78	34
P	F		1560-625-9370	S1630-61044-1	<78286>	..SUPPORT ASSEMBLY,FUEL.....		EA		1	*	*	*		*	78	35
						SELECTOR VALVE											
						ATTACHING PARTS											
			5305-145-7011	AN503-8-8	<88044>	..SCREW,MACHINE.....		HD		4	*	*	*		*	78	36
			5310-184-8966	AN960PD8	<88044>	..WASHER,FLAT.....		HD		4	*	*	*		*	78	
						---*---											
X1				S1630-61137	<78286>	...GEAR,CONTROL HANDLE.....		EA		1						78	37
P	F		1560-570-0633	S1630-61138-1	<78286>	...SHAFT ASSEMBLY,SELECTOR...		EA		1	*	*	*		*	78	39
						VALVE											
X1				066650	<70138>	....DRIVER-FUEL COCK.....		EA		1						78	
						CONTROL WHEN EXHTD											
						RQTN NHA 1560-570-0633											
X1				S1630-61147-1	<78286>	...SHAFT,SELECTOR VALVE.....		EA		1						78	
P	F		2915-595-4268	1311-532454	<45681>	.VALVE,PLUG-FUEL SEE.....		EA		1	*	*	2	10	*	78	40
						FIG.78A FOR BREAKDOWN											
						ATTACHING PARTS											
			5306-550-0486	AN3H32A	<88044>	.BOLT,MACHINE.....		EA		3	*	*	*		*	78	41
			5310-167-0753	AN960PD10L	<88044>	.WASHER,FLAT.....		HD		6	*	*	*		*	78	
			5310-877-5797	MS21044N3	<96906>	.NUT,SELF-LOCKING,HEXAGON....		EA		3	*	*	*		*	78	
						---*---											
P	F		1560-674-1187	S1630-62024-2	<78286>	.BRACKET,FUEL SYSTEM.....		EA		1	*	*	*		*	78	42
						ATTACHING PARTS											
			5306-182-2057	AN3H4A	<88044>	.BOLT,MACHINE.....		HD		2	*	*	*		*	78	43
			5310-167-0753	AN960PD10L	<88044>	.WASHER,FLAT.....		HD		2	*	*	*		*	78	
			5310-877-5797	MS21044N3	<96906>	.NUT,SELF-LOCKING,HEXAGON....		EA		2	*	*	*		*	78	
						---*---											
P	F		1560-674-1179	S1630-62025	<78286>	.BRACKET,FUEL SELECTOR.....		EA		1	*	*	*		*	78	44
P	F		1560-674-1186	S1630-62024-1	<78286>	..BRACKET,FUEL SYSTEM.....		EA		1	*	*	*		*	78	45
						ATTACHING PARTS											
			5306-182-2057	AN3H4A	<88044>	..BOLT,MACHINE.....		HD		2	*	*	*		*	78	
			5310-167-0753	AN960PD10L	<88044>	..WASHER,FLAT.....		HD		4	*	*	*		*	78	
			5310-877-5797	MS21044N3	<96906>	..NUT,SELF-LOCKING,HEXAGON...		EA		2	*	*	*		*	78	
						---*---											
P	F		2915-595-4268	1311-532454	<45681>	VALVE,PLUG-FUEL SEE FIG.78..		EA			*	*	REF	REF		78A	
						FOR NHA											
P	H		2915-641-5615	10-1448-2-2	<45681>	.PACKING,PREFORMED.....		EA		3	*	*	*		*	78A	1
P	H		5305-014-0750	5-3145-2	<45681>	.SCREW,LOCK.....		EA		2	*	*	*		*	78A	2
P	H		5305-638-0448	10-446-1	<45681>	.SETSCREW.....		EA		2	*	*	*		*	78A	3
				7-1043-3	<45681>	.SPRING.....		EA		2						78A	4
P	H		2915-095-0621	7-743-7	<45681>	.FOLLOWER,BALL.....		EA		2	*	*	*		*	78A	5
P	H		3110-198-1050	AN216CP16	<88044>	.BALL BEARING.....		HD		2	*	*	*		*	78A	6

(1) SOURCE, MAINT AND REC CODE (a) SOURCE CODE	(b) MAINT LEVEL	(c) REC CODE	(2) FEDERAL STOCK NUMBER	REFERENCE NUMBER		(3) DESCRIPTION	MODELS USABLE ON CH-34C	(4) UNIT OF ISSUE	(5) QTY INC IN UNIT PACK	(6) QTY INC IN UNIT	(7) 30-DAY DS GS MAINT ALW (a) 1-20	(b) 21-50	(c) 51-100	(8) 1-YR ALW PER 100 EQUIP CNTGCY	(9) DEPOT MAINT ALW PER 100 EQUIP	(10) ILLUSTRATION (a) FIG NO	(b) ITEM NO
P	H		2915-095-0706	9-2743-12	<45681>	.YOKE,SELECTOR VALVE..... ATTACHING PARTS		EA		1	*	*	*		*	78A	7
			5315-021-9090	5-1638-10	<45681>	.PIN,TAPER.....		EA		1	*	*	*		*	78A	8
			5310-497-3889	AN365-640A	<88044>	.NUT,SELF-LOCKING,HEXAGON.... ---*---		EA		1	*	*	*		*	78A	
P	H		2915-438-9272	7-1746-28	<45681>	.PLATE,COVER,SELECTOR VALVE..		EA		1	*	2	2		*	78A	9
P	H		5330-298-5791	7-1746-27	<45681>	.WASHER.....		EA		1	*	*	*		*	78A	10
P	H		2915-095-0623	7-743-8	<45681>	.RING.....		EA		1	*	*	*		*	78A	11
P	H		2915-293-4905	4-2547-8	<45681>	.BUSHING,ROTOR,SELECTOR VALVE		EA		1	*	*	*		*	78A	12
P	H		2915-095-0451	4-547-7-1	<45681>	.CAP,TOP,SELECTOR VALVE.....		EA		1	*	*	*		*	78A	13
P	H		2915-095-0450	4-547-4-1	<45681>	.CAP,BOTTOM,SELECTOR VALVE... ATTACHING PARTS		EA		1	*	*	*		*	78A	14
			5305-282-9854	AN500A2-8	<88044>	.SCREW,MACHINE.....		EA		8	*	*	*		*	78A	
P	H		5310-530-4114	P24532	<06840>	.WASHER,FLAT..... ---*---		EA		8					*	78A	
P	H		2915-291-9301	10-1448-2-7	<45681>	.PACKING,PREFORMED.....		EA		2	*	*	*		*	78A	15
P	H		2915-486-2856	2-244-21	<45681>	.PACKING,PREFORMED.....		EA		2	*	*	*		*	78A	16
P	H		2915-438-9178	5-2049-1	<45681>	.DISK,SEALING.....		EA		2	*	*	*		*	78A	17
P	H		2915-070-4567	10-2543-8-1	<45681>	.ROTOR,SELECTOR VALVE,FUEL...		EA		1	*	*	*		*	78A	18
X2	H		2915-070-4564	4-547-2	<45681>	.BODY,SELECTOR VALVE.....		EA		1	*	*	*		*	78A	19
P	H		2915-256-8025	10-1448-1-1	<45681>	.PACKING,PREFORMED.....		EA		1	*	*	*		*	78A	20
P	H		5310-641-9916	2-1247-7	<45681>	.WASHER,FLAT.....		EA		1	*	*	*		*	78A	21
P	H		2915-200-9654	2-1247-8	<45681>	.SPRING,HELICAL,COMPRESSION..		EA		1	*	*	*		*	78A	22
				S1630-62401-2	<78286>	FORWARD SELF-SEALING FUEL.... CELL INSTALLATION SEE FIG. 77 FOR NHA										79	
				S1630-62408-3	<78286>	.CAP-FILLER.....		EA		1						79	1
P	O		1560-509-7572	416-1S58	<99321>	.CAP AND FLANGE ASSEMBLY,.... FUEL CELL ATTACHING PARTS		EA		1	2	2	3		*	79	
			5306-182-2017	AN4H6A	<88044>	.BOLT,MACHINE.....		HD		12	*	*	*		*	79	2
			5310-184-9001	AN960PD416L	<88044>	.WASHER,FLAT.....		HD		24	*	*	*		*	79	
			5310-543-4443	MS20364-428A	<96906>	.NUT,SELF-LOCKING,HEXAGON.... ---*---		HD		12	*	*	*		*	79	
			1560-663-8858	S14-30-6029-1	<78286>	.GASKET RPL-BY 1560-189-8412										79	
P	O		1560-189-8412	S14-30-6029	<78286>	.GASKET RPLS-- 1560-663-8858		EA		2	6	15	29		*	79	3
			4730-329-7115	S1630-62015-2	<78286>	.ELBOW RPL-BY 1560-624-6157.										79	
			1560-544-0604	S1630-62123-2	<78286>	.ELBOW RPL-BY 1560-624-6157.										79	
P	O		1560-624-6157	S1630-62123-10	<78286>	.ELBOW,FUEL FILTER NECK..... RPLS-- 1560-544-0604, 4730-329-7115 ATTACHING PARTS		EA		1	*	*	*		*	79	4
			5306-182-1960	AN4H12A	<88044>	.BOLT,MACHINE.....		HD		10	*	*	*		*	79	5
			5310-184-9001	AN960PD416L	<88044>	.WASHER,FLAT.....		HD		10	*	*	*		*	79	
			5306-639-7701	MS2004H14	<96906>	.BOLT,INTERNAL WRENCHING.....		EA		2	*	*	*		*	79	6
			5310-184-9001	AN960PD416L	<88044>	.WASHER,FLAT.....		HD		2	*	*	*		*	79	

(1) SOURCE, MAINT AND REC CODE (a) SOURCE CODE	(b) MAINT CODE	(c) REC CODE	(2) FEDERAL STOCK NUMBER	REFERENCE NUMBER	(3) DESCRIPTION	MODELS USABLE ON CH-34C	(4) UNIT OF ISSUE	(5) QTY INC IN UNIT PACK	(6) QTY INC IN UNIT	(7) 30-DAY DS GS MAINT ALW (a) 1-20	(b) 21-50	(c) 51-100	(8) 1-YR ALW PER 100 EQUIP CNTGCY	(9) DEPOT MAINT ALW PER 100 EQUIP	(10) ILLUSTRATION (a) FIG NO	(b) ITEM NO
					CONTINUED										79	
					---*---											
			1560-332-3521	S1630-62034 <78286>	.GASKET RPL-BY 1560-340-0408										79	
P	O		1560-340-0408	S1630-62194 <78286>	.GASKET,FUEL CELL NECK.....		EA		1	3	9	17		*	79	7
					RPLS-- 1560-332-3521											
P	O		1560-633-6978	S1630-62076-2 <78286>	.COLLAR,FUEL CELL.....		EA		1	2	2	4		*	79	8
			1560-326-3468	S1630-62035 <78286>	.SPACER- RPL-BY 1560-589-6073										79	
P	O		1560-589-6073	S1630-62146 <78286>	.SPACER,FUEL CELL FILLER.....		EA		1	2	2	3		*	79	9
					RPLS-- 1560-326-3468											
P	O		1560-606-7515	S1630-62061-1 <78286>	.GASKET,FILLER ELBOW,TUBE....		EA		1	6	15	30		*	79	10
P	O		1560-798-3634	S1630-62045-1 <78286>	.COVER,FUEL CELL ACCESS.....		EA		4	*	2	2		*	79	11
					ATTACHING PARTS											
			5306-182-2061	AN3H10A <88044>	.BOLT,MACHINE.....		HD		16	*	*	*		*	79	12
			5310-167-0753	AN960PD10L <88044>	.WASHER,FLAT.....		HD		16	*	*	*		*	79	
					---*---											
P	O		1560-663-4462	S1630-62047 <78286>	.GASKET.....		EA		4	14	34	68		*	79	13
MF	F			S14-30-6034 <78286>	.COVER,FUEL CELL ACCESSORY...		EA		4						79	14
					MAKEFR											
					AR 9535-232-0529 AL ALLY SH											
					ATTACHING PARTS											
			5306-182-2015	AN4H4A <88044>	.BOLT,MACHINE.....		HD		16	*	*	*		*	79	15
			5310-184-9001	AN960PD416L <88044>	.WASHER,FLAT.....		HD		16	*	*	*		*	79	
					---*---											
P	F		1560-189-8411	S14-30-6028 <78286>	.GASKET.....		EA		4	12	30	60		*	79	16
P	F		1560-332-3523	S1630-62046 <78286>	.SUPPORT ASSEMBLY,FUEL.....		EA		4	*	2	2		*	79	17
					ATTACHING PARTS											
			5305-045-3180	MS24694S101 <96906>	.SCREW,MACHINE.....		EA		2	*	*	*		*	79	18
			5310-167-0753	AN960PD10L <88044>	.WASHER,FLAT.....		HD		2	*	*	*		*	79	
			5310-807-1467	MS21042-3 <96906>	.NUT,SELF-LOCKING,HEXAGON....				2	*	*	*		*	79	
					---*---											
P	O		1560-570-0643	S1630-62027-3 <78286>	.COVER ASSEMBLY,ACCESSORY....		EA		1	*	*	*		*	79	19
					ATTACHING PARTS											
			5306-182-2060	AN3H7A <88044>	.BOLT,MACHINE.....		HD		20	*	*	*		*	79	20
			5310-167-0753	AN960PD10L <88044>	.WASHER,FLAT.....		HD		20	*	*	*		*	79	
					---*---											
P	O		1560-334-6356	S1630-62028 <78286>	.GASKET,ACCESSORY COVER.....		EA		1	5	13	25		*	79	21
MF	F			S1630-62048-1 <78286>	.COVER.....		EA		1						79	22
					MAKEFR											
					AR 9535-232-0378 AL ALLY SH											
					ATTACHING PARTS											
			5306-208-9029	AN4DDH5A <88044>	.BOLT,MACHINE.....		EA		20	*	*	*		*	79	23
			5310-184-9001	AN960PD416L <88044>	.WASHER,FLAT.....		HD		20	*	*	*		*	79	
					---*---											
P	F		1560-530-1052	S14-30-6218 <78286>	.GASKET.....		EA		1	3	6	13		22	79	24
			1560-530-1052	T27-050 <12849>	ADDED PART NO.FOR ABOVE ITEM.		EA			REF	REF	REF			79	24
P	F		1560-327-3902	S1630-62026 <78286>	.SUPPORT ASSEMBLY,FUEL CELL..		EA		1	*	*	*		*	79	25
					ATTACHING PARTS											
			5305-045-3180	MS24694S101 <96906>	.SCREW,MACHINE.....		EA		2	*	*	*		*	79	26
			5310-167-0753	AN960PD10L <88044>	.WASHER,FLAT.....		HD		2	*	*	*		*	79	
			5310-807-1467	MS21042-3 <96906>	.NUT,EXTENDER WASHER.....				2	*	*	*		*	79	
					---*---											
P	O		1560-798-3634	S1630-62045-1 <78286>	.COVER,FUEL CELL ACCESS.....		EA		1	*	REF	REF		REF	79	27

(1) SOURCE, MAINT AND REC CODE (a) SOURCE CODE	(b) MAINT LEVEL	(c) REC CODE	(2) FEDERAL STOCK NUMBER	REFERENCE NUMBER	(3) DESCRIPTION	MODELS USABLE ON CH-34C	(4) UNIT OF ISSUE	(5) QTY INC IN UNIT PACK	(6) QTY INC IN UNIT	(7) 30-DAY DS/GS MAINT ALW (a) 1-20	(b) 21-50	(c) 51-100	(8) 1-YR ALW PER 100 EQUIP CNTGCY	(9) DEPOT MAINT ALW PER 100 EQUIP	(10) ILLUSTRATION (a) FIG NO	(b) ITEM NO
					CONTINUED										79	27
					ATTACHING PARTS											
			5306-182-2061	AN3H10A <88044>	.BOLT,MACHINE.....		HD		16	*	*	*		*	79	28
			5310-167-0753	AN960PD10L <88044>	.WASHER,FLAT.....		HD		16	*	*	*		*	79	
					---*---											
P	O		1560-663-4462	S1630-62047 <78286>	.GASKET.....		EA		1	REF	REF	REF		REF	79	29
			5306-182-2015	AN4H4A <88044>	.BOLT,MACHINE.....		HD		16	*	*	*		*	79	30
			5310-184-9001	AN960PD416L <88044>	.WASHER,FLAT.....		HD		16	*	*	*		*	79	
P	F		5935-539-3740	163-0531 <97485>	.ADAPTER,CONNECTOR.....		EA		1	*	*	*		*	79	31
P	F		5935-552-4682	163-0532 <97485>	.ADAPTER,CONNECTOR.....		EA		1	*	*	*		*	79	32
P	F		5935-015-0499	163-0533 <97485>	.ADAPTER,CONNECTOR.....		EA		1	*	*	*		*	79	33
P	F		5935-627-0366	163-0534 <77272>	.ADAPTER,CONNECTOR.....		EA		1	2	3	6		*	79	34
			1560-342-8922	S1630-62088-3 <78286>	.COVER RPL-BY 1560-624-6156.		EA			*	*	*			79	
			1560-336-0856	S1630-62088-4 <78286>	.COVER RPL-BY 1560-624-6156.										79	
P	F		1560-624-6156	S1630-62088-14 <78286>	.COVER,FUEL CELL SUPPORT..... RPLS-- 1560-336-0856, 1560-342-8922		EA		1	*	*	*		*	79	35
P	F		1560-189-8411	S14-30-6028 <78286>	.GASKET.....		EA		1	REF	REF	REF		REF	79	36
P	F		1560-326-3471	S1630-62046-2 <78286>	.SUPPORT ASSEMBLY,FUEL CELL..		EA		1	*	*	*		*	79	37
					ATTACHING PARTS											
			5305-045-3180	MS24694S101 <96906>	.SCREW,MACHINE.....		EA		2	*	*	*		*	79	38
			5310-167-0753	AN960PD10L <88044>	.WASHER,FLAT.....		HD		2	*	*	*		*	79	
			5310-807-1467	MS21042-3 <96906>	.NUT,EXTENDED WASHER.....				2	*	*	*		*	79	
					---*---											
P	O		1560-798-3634	S1630-62045-1 <78286>	.COVER,FUEL CELL ACCESS.....		EA		1	*	REF	REF		REF	79	39
					ATTACHING PARTS											
			5306-182-2061	AN3H10A <88044>	.BOLT,MACHINE.....		HD		16	*	*	*		*	79	40
			5310-167-0753	AN960PD10L <88044>	.WASHER,FLAT.....		HD		16	*	*	*		*	79	
					---*---											
P	O		1560-663-4462	S1630-62047 <78286>	.GASKET.....		EA		1	REF	REF	REF		REF	79	41
			5306-182-2015	AN4H4A <88044>	.BOLT,MACHINE.....		HD		16	*	*	*		*	79	42
			5310-184-9001	AN960PD416L <88044>	.WASHER,FLAT.....		HD		16	*	*	*		*	79	
P	F		5935-539-3740	163-0531 <98745>	.ADAPTER,CONNECTOR.....		EA		1	*	*	*		REF	79	43
P	F		5935-552-4682	163-0532 <98745>	.ADAPTER,CONNECTOR.....		EA		1	*	*	*		REF	79	44
			1560-332-3526	S1630-62088-1 <78286>	.COVER RPL-BY 1560-625-4521.										79	
			1560-520-6312	S1630-62088-8 <78286>	.COVER RPL-BY 1560-625-4521.										79	
P	F		1560-625-4521	S1630-62088-11 <78286>	.COVER RPLS--..... 1560-332-3526, 1560-520-6312		EA		1	*	*	*		*	79	45
P	F		1560-189-8411	S14-30-6028 <78286>	.GASKET.....		EA		1	REF	REF	REF		REF	79	46
P	F		1560-326-3471	S1630-62046-2 <78286>	.SUPPORT ASSEMBLY,FUEL CELL.. ATTACHING		EA		1	*	*	*		REF	79	47
					ATTACHING PARTS											
			5305-045-3180	MS24694S101 <96906>	.SCREW,MACHINE.....		EA		2	*	*	*		*	79	48
			5310-167-0753	AN960PD10L <88044>	.WASHER,FLAT.....		HD		2	*	*	*		*	79	
			5310-807-1467	MS21042-3 <96906>	.NUT,EXTENDED WASHER.....				2	*	*	*		*	79	
					---*---											
P	F		1560-707-3313	S1630-62055-15 <78286>	.TUBE ASSEMBLY.....		EA		1	*	*	*		*	79	49
P	F		4820-289-1478	1111-517703 <92003>	.VALVE,CHECK.....		EA		1	*	*	*		*	79	
			1560-332-3525	S1630-62051 <78286>	.FITTING RPL-BY..... 1560-544-0903										79	

(1) SOURCE, MAINT AND REC CODE (a) SOURCE CODE	(b) MAINT LEVEL	(c) REC CODE	(2) FEDERAL STOCK NUMBER	REFERENCE NUMBER	(3) DESCRIPTION	MODELS USABLE ON CH-34C	(4) UNIT OF ISSUE	(5) QTY INC IN UNIT PACK	(6) QTY INC IN UNIT	(7) 30-DAY DS/GS MAINT ALW (a) 1-20	(b) 21-50	(c) 51-100	(8) 1-YR ALW PER 100 EQUIP CNTGCY	(9) DEPOT MAINT ALW PER 100 EQUIP	(10) ILLUSTRATION (a) FIG NO	(b) ITEM NO
P	F		1560-544-0903	S1630-62133 <78286>	.FITTING,FORWARD CENTER..... CELL RPLS-- 1560-332-3525		EA		1	*	*	*		*	79	50
					ATTACHING PARTS											
			5306-292-8252	AN4H7A <88044>	.BOLT,MACHINE.....		HD		6	*	*	*		*	79	51
			5310-184-9001	AN960PD416L <88044>	.WASHER,FLAT.....		HD		6	*	*	*		*	79	
					---*---											
P	F		1560-340-0371	S1630-62033 <78286>	.GASKET.....		EA		1	6	15	30		*	79	52
			1560-326-3473	S1630-62072 <78286>	.FITTING ASSEMBLY RPL-BY.... 1560-544-0904										79	
P	F		1560-544-0904	S1630-62135 <78286>	.FITTING,INTERNAL FUEL..... TRANSFER RPLS-- 1560-326-3473		EA		1	*	*	2		*	79	53
P	F		5310-682-5877	RL28SB8 <83324>	..RING,LOCK,SERRATED.....		HD		6	*	*	*		REF	79	54
P	F		5340-200-4175	805735-00 <87991>	..INSERT,SCREW THREAD.....		EA		6	*	*	*		REF	79	
X1				S1630-62135-2 <78286>	..FITTING,BODY.....		EA		1						79	55
			1560-336-7957	S1630-62098-2 <78286>	.FITTING-RH RPL-BY..... 1560-544-0949										79	
P	F		1560-544-0949	S1630-62126-2 <78286>	.FITTING-RH RPLS--..... 1560-336-7957		EA		1	*	*	*		*	79	56
			1560-336-7956	S1630-62098-1 <78286>	.FITTING-LH RPL-BY..... 1560-544-0948										79	
P	F		1560-544-0948	S1630-62126-1 <78286>	.FITTING,FORWARD CELL..... GRAVITY CONNECTION-LH RPLS-- 1560-336-7956, 1560-340-2034		EA		1	*	*	*		*	79	
					ATTACHING PARTS											
			5306-182-1961	AN4H13A <88044>	.BOLT,MACHINE.....		HD		4	*	*	*		*	79	57
			5310-184-9001	AN960PD416L <88044>	.WASHER,FLAT.....		HD		4	*	*	*		*	79	
					---*---											
P	F		1560-663-4465	S1630-62036 <78286>	.GASKET.....		EA		2	REF	REF	REF		REF	79	58
MF	F			S1630-62055-97 <78286>	.TUBE ASSEMBLY..... MAKEFR AR 4710-277-3627 TUBE 2 EA 4730-287-0067 NUT 2 EA 4730-289-1027 SLEEVE		EA		2						79	59
			4730-287-0285	AN818-12D <88044>	..NUT,TUBE COUPLING.....		EA		2	*	*	*		*	79	60
			4730-287-0067	MS20819-12D <96906>	..SLEEVE,FLARED TUBE FITTING.		EA		2	*	*	*		*	79	61
			4730-684-6914	MS24392D12 <96906>	.NIPPLE,TUBE.....		EA		2	*	*	*		*	79	63
			5330-263-8033	MS29512-12 <96906>	.PACKING,PREFORMED.....		EA		2	*	*	*		*	79	64
				S1630-62055-99 <78286>	..TUBE.....		EA		2						79	65
			4730-287-0285	AN818-12D <88044>	..NUT,TUBE COUPLING.....		EA		2	*	*	*		*	79	66
			4730-287-0067	MS20819-12D <96906>	..SLEEVE,FLARED TUBE FITTING.		EA		2	*	*	*		*	79	67
			1560-326-3472	S1630-62071 <78286>	.FITTING RPL-BY..... 1560-544-0902										79	
P	F		1560-544-0902	S1630-62125 <78286>	.FITTING RPLS--..... 1560-326-3472		EA		2	*	*	*		*	79	69
					ATTACHING PARTS											
			5306-576-5635	AN6H16A <88044>	.BOLT,MACHINE.....		EA		4	*	*	*		*	79	70
			5310-184-9001	AN960PD416L <88044>	.WASHER,FLAT.....		HD		4	*	*	*		*	79	
					---*---											
P	F		1560-663-4465	S1630-62036 <78286>	.GASKET.....		EA		2	REF	REF	REF		REF	79	71
P	O		1560-659-9237	S1630-62055-85 <78286>	.TUBE ASSEMBLY,FUEL CELL.....		EA		1	*	*	*		*	79	72

(1) SOURCE, MAINT AND REC CODE (a) SOURCE CODE	(b) MAINT LEVEL	(c) REC CODE	(2) FEDERAL STOCK NUMBER	REFERENCE NUMBER		(3) DESCRIPTION	MODELS USABLE ON CH-34C	(4) UNIT OF ISSUE	(5) QTY INC IN UNIT PACK	(6) QTY INC IN UNIT	(7) 30-DAY DS GS MAINT ALW (a) 1-20	(b) 21-50	(c) 51-100	(8) 1-YR ALW PER 100 EQUIP CNTGCY	(9) DEPOT MAINT ALW PER 100 EQUIP	(10) ILLUSTRATION (a) FIG NO	(b) ITEM NO
			4730-287-0271	AN818-20D	<88044>	..NUT,TUBE COUPLING.....		EA		2	*	*	*		*	79	73
			4730-287-0064	AN819-20D	<88044>	..SLEEVE,FLARED TUBE FITTING.		EA		2	*	*	*		*	79	74
				S1630-62055-86	<78286>	..TUBE.....		EA		1						79	75
			5306-754-3048	MS20073-04-06	<96906>	.BOLT,MACHINE.....		HD		4	*	*	*		*	79	76
			5310-184-9001	AN960PD416L	<88044>	.WASHER,FLAT.....		HD		4	*	*	*		*	79	
			4730-289-0786	AN756D24	<88044>	.FLANGE,PIPE,SWIVEL RETAINING		EA		1	*	*	*		*	79	77
P	F		4730-202-8826	MS20762D20-24	<96906>	.ELBOW,TUBE.....		EA		1	*	*	*		*	79	78
			5330-171-6945	AN763-24	<88044>	.GASKET.....		EA		2	REF	REF	REF		*	79	79
		R	2915-323-4517	20-1227-002	<70138>	.VALVE,LEVER CONTROL..... RPL-BY 2915-310-5389										79	
P	F	R	2915-310-5389	20-1227-005	<70138>	.VALVE,FLOAT,ASSEMBLY,FUEL... RPLS-- 2915-323-4517 SEE FIG.79B FOR BREAKDOWN		EA		1	*	2	2		*	79	80
P	F		1560-674-6924	S1630-62080	<78286>	.BRACKET ASSEMBLY..... ATTACHING PARTS		EA		1	*	*	*		*	79	81
			5306-182-1964	AN4H16A	<88044>	.BOLT,MACHINE.....		HD		4	*	*	*		*	79	82
			5310-184-9001	AN960PD416L	<88044>	.WASHER,FLAT.....		HD		4	*	*	*		*	79	
			5310-877-5796	MS21044N4	<96906>	.NUT,SELF-LOCKING,HEXAGON....		EA		4	*	*	*		*	79	
						---*---											
				S1630-62182	<78286>	.SPACER.....		EA		4						79	83
				755-16-2-10AF	<00502>	.CLIP..... ATTACHING PARTS		EA		1						79	84
			5305-989-7435	MS35207-264	<96906>	.SCREW,MACHINE.....		HD		1	*	*	*		*	79	85
			5310-167-0753	AN960PD10L	<88044>	.WASHER,FLAT.....		HD		2	*	*	*		*	79	
			5310-807-1467	MS21042-3	<96906>	.NUT,EXTENDED WASHER.....				1	*	*	*		*	79	
						---*---											
P	F		1560-707-3314	S1630-62055-17	<78286>	.TUBE ASSEMBLY.....		EA		1	*	*	*		*	79	86
			4730-804-1901	MS24399D27	<96906>	.REDUCER,TUBE.....		EA		1	*	*	*		*	79	87
P	F		4730-566-4291	S1630-62136	<78286>	.COUPLING,TUBE..... ATTACHING PARTS		EA		1	*	*	*		*	79	88
			5306-182-1958	AN4H10A	<88044>	.BOLT,MACHINE.....		HD		12	*	*	*		*	79	89
			5310-184-9001	AN960PD416L	<88044>	.WASHER,FLAT.....		HD		12	*	*	*		*	79	
						---*---											
P	F		1560-340-0371	S1630-62033	<78286>	.GASKET.....		EA		1	REF	REF	REF		REF	79	90
			1560-326-3473	S1630-62072	<78286>	.FITTING ASSEMBLY RPL-BY.... 1560-544-0904										79	
P	F		1560-544-0904	S1630-62135	<78286>	.FITTING,INTERNAL FUEL..... TRANSFER RPLS-- 1560-326-3473		EA		1	*	*	REF		REF	79	91
P	F		5310-682-5877	RL28SB8	<83324>	..RING,LOCK,SERRATED.....		HD		6	*	*	*		REF	79	92
P	F		5340-200-4175	805735-00	<87991>	..INSERT,SCREW THREAD.....		EA		6	*	*	*		REF	79	
X1				S1630-62135-2	<78286>	..FITTING,BODY.....		EA		1						79	93
MF	F			S1630-62055-65	<78286>	.TUBE ASSEMBLY..... MAKEFR		EA		1						79	94
						AR 4710-277-3627 TUBE											
						2 EA 4730-289-1027 SLEEVE											
						2 EA 4730-287-0067 NUT											
MF	F			S1630-62055-66	<78286>	..TUBE..... MAKEFR		EA		1						79	97
						AR 4710-278-8746 TUBE											
			4730-684-6914	MS24392D12	<96906>	.NIPPLE,TUBE.....		EA		1	*	*	*		*	79	98
			1560-566-4294	S1630-62132-2	<78286>	.FITTING RPL-BY..... 1560-545-9801										79	

(1) SOURCE, MAINT AND REC CODE (a) SOURCE CODE	(b) MAINT LEVEL	(c) REC CODE	(2) FEDERAL STOCK NUMBER	REFERENCE NUMBER		(3) DESCRIPTION	MODELS USABLE ON CH-34C	(4) UNIT OF ISSUE	(5) QTY INC IN UNIT PACK	(6) QTY INC IN UNIT	(7) 30-DAY DS GS MAINT ALW (a) 1-20	(b) 21-50	(c) 51-100	(8) 1-YR ALW PER 100 EQUIP CNTGCY	(9) DEPOT MAINT ALW PER 100 EQUIP	(10) ILLUSTRATION (a) FIG NO	(b) ITEM NO
P	F		1560-545-9801	S1630-62230-2	<78286>	.FITTING RPLS--.....		EA		1	*	*	*		*	79	99
						1560-326-3469,											
						1560-566-4294											
						ATTACHING PARTS											
			5310-187-2354	AN960PD416	<88044>	.WASHER,FLAT.....		HD		3	*	*	*		*	79	100
			5310-877-5796	MS21044N4	<96906>	.NUT,SELF-LOCKING,HEXAGON....		EA		3	*	*	*		*	79	
						---*---											
P	F		5310-682-5877	RL28SB8	<83324>	..RING,LOCK,SERRATED.....		HD		3	*	*	*		REF	79	101
P	F		5340-200-4175	805735-00	<87991>	..INSERT,SCREW THREAD.....		EA		3	*	*	*		REF	79	102
P	F		1560-332-3520	S1630-62029	<78286>	.GASKET.....		EA		1	3	9	17		*	79	104
			5310-282-7833	MS24400D12	<96906>	.NUT,PLAIN,HEXAGON.....		EA		1	*	*	*		*	79	105
			5330-263-8033	MS29512-12	<96906>	.PACKING,PREFORMED.....		EA		1	*	*	*		*	79	
			4730-994-0883	MS24393D12	<96906>	.NIPPLE,TUBE.....		EA		1	*	*	*		*	79	
			1560-332-3522	S1630-62042-1	<78286>	.FITTING RPL-BY.....										79	
						1560-545-9800											
			1560-565-3627	S1630-62132-1	<78286>	.FITTING RPL-BY.....										79	
						1560-545-9800											
P	F		1560-545-9800	S1630-62230-1	<78286>	.FITTING ASSEMBLY RPLS--....		EA		1	*	*	*		*	79	106
						1560-332-3522,											
						1560-565-3627											
						ATTACHING PARTS											
			5310-187-2354	AN960PD416	<88044>	.WASHER,FLAT.....		HD		3	*	*	*		*	79	107
			5310-877-5796	MS21044N4	<96906>	.NUT,SELF-LOCKING,HEXAGON....		EA		3	*	*	*		*	79	
						---*---											
P	F		5310-682-5877	RL28SB8	<83324>	..RING,LOCK,SERRATED.....		HD		3	*	*	*		REF	79	108
P	F		5340-200-4175	805735-00	<87991>	..INSERT,SCREW THREAD.....		EA		3	*	*	*		REF	79	109
P	F		1560-918-1911	S1630-62230-5	<78286>	..FITTING.....		EA		1	*	*	*		*	79	110
P	F		1560-332-3520	S1630-62029	<78286>	.GASKET.....		EA		1	REF	REF	REF		REF	79	111
MF	F			S1630-62055-65	<78286>	.TUBE ASSEMBLY.....		EA		1						79	112
						MAKEFR											
						AR 4710-277-3627 TUBING											
						2 EA 4730-289-0289 NUT											
						2 EA 4730-287-0067 SLEEVE											
			4730-287-0285	AN818-12D	<88044>	..NUT,TUBE COUPLING.....		EA		2	*	*	*		*	79	113
			4730-287-0067	MS20819-12D	<96906>	..SLEEVE,FLARED TUBE FITTING.		EA		2	*	*	*		*	79	114
MF	F			S1630-62055-66	<78286>	..TUBE.....		EA		1						79	115
						MAKEFR											
						AR 4710-278-8746 TUBE											
			4730-684-6914	MS24392D12	<96906>	.NIPPLE,TUBE.....		EA		1	*	*	*		*	79	116
P	F		1560-545-9800	S1630-62230-1	<78286>	.FITTING ASSEMBLY RPLS--....		EA		1	*	*	*		REF	79	117
						1560-332-3522,											
						1560-565-3627											
						ATTACHING PARTS											
			5310-187-2354	AN960PD416	<88044>	.WASHER,FLAT.....		HD		3	*	*	*		*	79	118
			5310-877-5796	MS21044N4	<96906>	.NUT,SELF-LOCKING,HEXAGON....		EA		3	*	*	*		*	79	
						---*---											
P	F		5310-682-5877	RL28SB8	<83324>	..RING,LOCK,SERRATED.....		HD		3	*	*	*		REF	79	119
P	F		5340-200-4175	805735-00	<87991>	..INSERT,SCREW THREAD.....		EA		3	*	*	*		REF	79	120
P	F		1560-918-1911	S1630-62230-5	<78286>	..FITTING.....		EA		1	*	*	*		REF	79	121
P	F		1560-332-3520	S1630-62029	<78286>	.GASKET.....		EA		1	REF	REF	REF		REF	79	122
			5310-282-7833	MS24400D12	<96906>	.NUT,PLAIN,HEXAGON.....		EA		1	*	*	*		*	79	123
			5330-263-8033	MS29512-12	<96906>	.PACKING,PREFORMED.....		EA		1	*	*	*		*	79	

(1) SOURCE, MAINT AND REC CODE (a) SOURCE CODE	(b) MAINT LEVEL	(c) REC CODE	(2) FEDERAL STOCK NUMBER	REFERENCE NUMBER		(3) DESCRIPTION	MODELS USABLE ON CH-34C	(4) UNIT OF ISSUE	(5) QTY INC IN UNIT PACK	(6) QTY INC IN UNIT	(7) 30-DAY DS/GS MAINT ALW (a) 1-20	(b) 21-50	(c) 51-100	(8) 1-YR ALW PER 100 EQUIP CNTGCY	(9) DEPOT MAINT ALW PER 100 EQUIP	(10) ILLUSTRATION (a) FIG NO	(b) ITEM NO
			4730-994-0883	MS24393D12	<96906>	.NIPPLE,TUBE.....		EA		1	*	*	*		*	79	
P	F		1560-545-9801	S1630-62230-2	<78286>	.FITTING RPLS--..... 1560-326-3469, 1560-566-4294 ATTACHING PARTS		EA		1	*	*	*		REF	79	124
			5310-187-2354	AN960PD416	<88044>	.WASHER,FLAT.....		HD		3	*	*	*		*	79	125
			5310-877-5796	MS21044N4	<96906>	.NUT,SELF-LOCKING,HEXAGON.... ---*---		EA		3	*	*	*		*	79	
P	F		5310-682-5877	RL28S68	<83324>	..RING,LOCK,SERRATED.....		HD		3	*	*	*		REF	79	126
P	F		5340-200-4175	805735-00	<87991>	..INSERT,SCREW THREAD.....		EA		3	*	*	*		REF	79	127
P	F		1560-332-3520	S1630-62029	<78286>	.GASKET.....		EA		1	REF	REF	REF		REF	79	129
P	O		6680-526-4370	165-0461-1478A	<83296>	.TRANSMITTER,LIQUID..... QUANTITY USBL EFF 53-4475 THRU 55-4504		EA		1	*	*	2		*	79	130
P	O	R	6680-670-2984	165-0461-1478B	<97485>	.TRANSMITTER,FUEL QUANTITY... USBL EFF 56-4284 & SUBSEQUENT ATTACHING PARTS		EA		1	*	*	*		*	79	
			5305-150-9209	AN502-10-14	<88044>	.SCREW,MACHINE.....		HD		4	*	*	*		*	79	131
			5310-167-0753	AN960PD10L	<88044>	.WASHER,FLAT.....		HD		10	*	*	*		*	79	
			5310-261-8278	MS35338-100	<96906>	.WASHER,LOCKER..... ---*---		HD		2	*	*	*		*	79	
MF	F			NAS43DD3-23	<80205>	.SPACER,SLEEVE..... MAKEFR AR 5340-826-6257 SPACER		EA		4						79	132
P	F	R	6680-575-1129	S1630-62405-1	<78286>	.TRANSMITTER,LIQUID QUANTITY.		EA		1	*	*	*		*	79	
P	F	R	6680-624-8566	S1630-62405-2	<78286>	.TRANSMITTER,LIQUID..... QUANTITY USBL EFF 56-4284 & SUBSEQUENT ATTACHING PARTS		EA		1	*	*	2	7	*	79	137
			5310-167-0753	AN960PD10L	<88044>	.WASHER,FLAT.....		HD		4	*	*	*		*	79	138
			5310-184-8968	MS35337-100	<96906>	.WASHER,LOCK.....		HD		4	*	*	*		*	79	
			5310-807-1467	MS21042-3	<96906>	.NUT,EXTENDED WASHER..... ---*---				4	*	*	*		*	79	
P	F		1560-570-0644	S1630-62158-1	<78286>	.POST,MOUNTING,TANK-FUEL..... RPLS-- 1560-544-0905 ATTACHING PARTS		EA		4	2	2	3		*	79	
P	F		5310-477-8775	140-58228	<78286>	.WASHER,FLAT.....		EA		4	*	*	*		REF	79	140
			5310-807-1467	MS21042-3	<96906>	.NUT,EXTENDED WASHER..... ---*---				4	*	*	*		*	79	
			5306-182-1965	AN4H17A	<88044>	.BOLT,MACHINE.....		HD		12	*	*	*		*	79	141
			5310-184-9001	AN960PD416L	<88044>	.WASHER,FLAT.....		HD		24	*	*	*		*	79	
			5310-807-1468	MS21042-4	<96906>	.NUT,EXTENDED WASHER.....		HD		1	*	*	*		*	79	
			5306-182-1960	AN4H12A	<88044>	.BOLT,MACHINE.....		HD		12	*	*	*		*	79	142
			5310-184-9001	AN960PD416L	<88044>	.WASHER,FLAT.....		HD		12	*	*	*		*	79	
			5310-187-2354	AN960PD416	<88044>	.WASHER,FLAT.....		HD		12	*	*	*		*	79	
			5310-543-4443	MS20364-428A	<96906>	.NUT,SELF-LOCKING,HEXAGON....		HD		12	*	*	*		*	79	
			5340-990-9299	EAB700D4	<81996>	.CLAMP,LOOP..... ATTACHING PARTS		EA		1	*	*	*		*	79	143
			5305-989-7435	MS23207-264	<96906>	.SCREW,MACHINE.....		HD		1	*	*	*		*	79	144
			5310-167-0753	AN960PD10L	<88044>	.WASHER,FLAT.....		HD		2	*	*	*		*	79	
			5310-807-1467	MS21042-3	<96906>	.NUT,EXTENDED WASHER.....				1	*	*	*		*	79	

(1) SOURCE, MAINT AND REC CODE (a) SOURCE CODE	(b) MAINT LEVEL	(c) REC CODE	(2) FEDERAL STOCK NUMBER	REFERENCE NUMBER	(3) DESCRIPTION	MODELS USABLE ON CH-34C	(4) UNIT OF ISSUE	(5) QTY INC IN UNIT PACK	(6) QTY INC IN UNIT	(7) 30-DAY DS/GS MAINT ALW (a) 1-20	(b) 21-50	(c) 51-100	(8) 1 YR ALW PER 100 EQUIP CNTGCY	(9) DEPOT MAINT ALW PER 100 EQUIP	(10) ILLUSTRATION (a) FIG NO	(b) ITEM NO
					CONTINUED										79	
					---*---											
			5306-182-2015	AN4H4A <88044>	.BOLT,MACHINE.....		HD		12	*	*	*		*	79	145
			5310-184-9001	AN960PD416L <88044>	.WASHER,FLAT.....		HD		24	*	*	*		*	79	
			5310-187-2354	AN960PD416 <88044>	.WASHER,FLAT.....		HD		6	*	*	*		*	79	
			5310-543-4443	MS20364-428A <96906>	.NUT,SELF-LOCKING,HEXAGON....		HD		12	*	*	*		*	79	
			5306-182-1959	AN4H11A <88044>	.BOLT,MACHINE.....		HD		8	*	*	*		*	79	147
			5310-184-9001	AN960PD416L <88044>	.WASHER,FLAT.....		HD		16	*	*	*		*	79	
			5310-543-4443	MS20364-428A <96906>	.NUT,SELF-LOCKING,HEXAGON....		HD		8	*	*	*		*	79	
			5306-182-1960	AN4H12A <88044>	.BOLT,MACHINE.....		HD		12	*	*	*		*	79	148
			5310-184-9001	AN960PD416L <88044>	.WASHER,FLAT.....		HD		12	*	*	*		*	79	
			5310-187-2354	AN960PD416 <88044>	.WASHER,FLAT.....		HD		12	*	*	*		*	79	
			5310-543-4443	MS20364-428A <96906>	.NUT,SELF-LOCKING,HEXAGON....		HD		12	*	*	*		*	79	
			5310-282-7834	MS24400D10 <96906>	.NUT,PLAIN,HEXAGON.....		EA		6	*	*	*		*	79	150
			5310-184-9001	AN960PD416L <88044>	.WASHER,FLAT.....		HD		12	*	*	*		*	79	151
P	F		1560-626-7273	S1630-62143 <78286>	.FITTING ASSEMBLY RPLS--....		EA		6	*	2	2		*	79	152
					1560-544-0935,											
					1560-565-5614,&											
					1560-575-2037											
					ATTACHING PARTS											
			5305-180-3322	AN525-10R6 <88044>	.SCREW,MACHINE.....		HD		2	*	*	*		*	79	153
			5310-183-4406	AN960PD10 <88044>	.WASHER,FLAT.....		HD		2	*	*	*		*	79	
			5310-184-9001	AN960PD416L <88044>	.WASHER,FLAT.....		HD		3	*	*	*		*	79	154
			5310-543-4443	MS20364-428A <96906>	.NUT,SELF-LOCKING,HEXAGON....		HD		3	*	*	*		*	79	
					---*---											
P	F		5310-200-7749	RL24SB7 <83324>	..RING,LOCK,SERRATED.....		HD		3	*	*	*		REF	79	155
P	F		5307-639-1617	SFA101-9SA12A <83324>	..STUD,LOCKED IN.....		EA		3	*	*	*		REF	79	156
			1560-567-1106	S1630-62401-31 <78286>	.FITTING,FUEL TRANSFER PUMP..										79	
					RPL-BY 1560-591-6673											
P	F		1560-591-6673	S1630-62145 <78286>	.FITTING RPLS--.....		EA		1	*	2	2		*	79	158
					1560-567-1106											
			5330-250-0230	MS29513-22 <96906>	.PACKING,PREFORMED.....		EA		1	*	REF	REF		*	79	159
		R	2915-775-7845	RG11260A1 <51663>	.PUMP,FUEL BOOSTER RPL-BY...										79	
					2915-859-8472											
P	F	R	2915-859-8472	RG11260A3 <51663>	.PUMP,FUEL BOOSTER RPLS--...		EA		1	2	3	5	62	*	79	160
					2915-775-7845											
					SEE FIG.79A FOR BREAKDOWN											
					ATTACHING PARTS											
			5306-182-2016	AN4H5A <88044>	.BOLT,MACHINE.....		HD		12	*	*	*		*	79	161
			5310-184-9001	AN960PD416L <88044>	.WASHER,FLAT.....		HD		12	*	*	*		*	79	
					---*---											
P	O		2915-097-0319	83001-2 <75361>	.COCK,POPPET DRAIN.....		EA		1	2	2	3		*	79	162
			1680-569-2570	U1760A2 <78943>	.CARTRIDGE ASSEMBLY RPL-BY..		EA			*	*	*			79	
					2915-090-4484											
P	O		1560-090-4484	MS26541-1 <96906>	.COCK-WATER DETECTOR.....		EA		1	*	2	2		*	79	163
					RPLS-- 1680-569-2570											
P	F		1560-544-0912	S1630-62226 <78286>	.ADAPTER,FUEL SYSTEM.....		EA		1	*	2	2		*	79	164
P	O		1560-633-6979	S1630-62409 <78286>	.GASKET.....		EA		1	2	3	6		*	79	165
P	O		4730-203-0721	S1630-62030 <78286>	.PLUG,MACHINE THREAD.....		EA		1	*	2	2		*	79	166
			5330-263-8034	MS29512-16 <96906>	.PACKING,PREFORMED.....		EA		1	*	*	REF		*	79	167
			1560-326-3474	S1630-62094 <78286>	.SPRING RPL-BY.....										79	
					1560-544-0911											

(1) SOURCE, MAINT AND REC CODE (a) SOURCE CODE	(b) MAINT LEVEL	(c) REC CODE	(2) FEDERAL STOCK NUMBER	REFERENCE NUMBER	(3) DESCRIPTION	MODELS USABLE ON CH-34C	(4) UNIT OF ISSUE	(5) QTY INC IN UNIT PACK	(6) QTY INC IN UNIT	(7) 30-DAY DS GS MAINT ALW (a) 1-20	(b) 21-50	(c) 51-100	(8) 1-YR ALW PER 100 EQUIP CNTGCY	(9) DEPOT MAINT ALW PER 100 EQUIP	(10) ILLUSTRATION (a) FIG NO	(b) ITEM NO
P	O		1560-544-0911	S1630-62225 <78286>	.SPRING,FUEL SUMP STRAINER... COMPRESSION RPLS-- 1560-326-3474		EA		1	*	*	*		*	79	168
			1560-334-6357	S1630-62039 <78286>	.STRAINER ASSEMBLY RPL-BY... 1560-544-0909										79	
			1560-505-8493	S1630-62039-2 <78286>	.STRAINER ASSEMBLY RPL-BY... 1560-544-0909										79	
P	O		1560-544-0909	S1630-62223 <78286>	.STRAINER ASSEMBLY,FUEL..... SUMP RPLS-- 1560-334-6357, 1560-505-8493		EA		1	*	2	2		*	79	169
			1560-327-3905	S1630-62041 <78286>	.HOUSING RPL-BY..... 1560-522-8897										79	
P	O		1560-522-8897	S1630-62131-2 <78286>	.HOUSING RPLS--..... 1560-327-3905 ATTACHING PARTS		EA		1	*	*	2		*	79	170
			5306-182-2016	AN4H5A <88044>	.BOLT,MACHINE.....		HD		2	*	*	*		*	79	171
			5310-184-9001	AN960PD416L <88044>	.WASHER,FLAT..... ---*---		HD		2	*	*	*		*	79	
			5330-263-8033	MS29512-12 <96906>	.PACKING,PREFORMED.....		EA		1	*	*	*		*	79	172
P	O		1560-550-6491	S1630-62064-1 <78286>	.GASKET.....		EA		1	2	5	11		*	79	173
			1560-795-1901	S1630-62227 <78286>	.ADAPTER,FUEL SUMP STRAIN....		EA								79	174
P	O		1560-550-6491	S1630-62064-1 <78286>	.GASKET.....		EA		1	REF	REF	REF		REF	79	175
			1560-544-0910	S1630-62224 <78286>	.STANDPIPE RPL-BY..... 1560-620-4121										79	
P	F		1560-620-4121	S1630-62224-1 <78286>	.STAND,PIPE,FUEL SUMP..... STRAINER RPLS-- 1560-544-0910		EA		1	2	4	8		*	79	176
P	F		1560-340-0401	S1630-62149 <78286>	.SUMP ASSEMBLY,FORWARD..... CENTER CELL ATTACHING PARTS		EA		1	*	*	*		*	79	177
			5310-187-2354	AN960PD416 <88044>	.WASHER,FLAT.....		HD		23	*	*	*		*	79	178
			5310-543-4443	MS20364-428A <96906>	.NUT,SELF-LOCKING,HEXAGON....		HD		23	*	*	*		*	79	
			5306-182-2057	AN3H4A <88044>	.BOLT,MACHINE.....		HD		4	*	*	*		*	79	179
			5310-167-0753	AN960PD10L <88044>	.WASHER,FLAT.....		HD		8	*	*	*		*	79	
			5310-807-1467	MS21042-3 <96906>	.NUT,EXTENDED WASHER.....				4	*	*	*		*	79	
			5310-728-3469	MS21077-08 <96906>	.NUT,SELF-LOCKING,PLATE..... ATTACHING PARTS		EA		6	*	*	*		*	79	181
P	F		5310-682-5877	RL28SB8 <83324>	..RING,LOCK,SERRATED.....		HD		2	*	*	*		REF	79	183
P	F		5310-200-7749	RL24SB7 <83324>	..RING,LOCK,SERRATED.....		HD		2	*	*	*		REF	79	
P	F		5340-200-4175	805735-00 <87991>	..INSERT,SCREW THREAD.....		EA		2	*	*	*		REF	79	184
P	F		5307-531-1414	SF101-9SA11A <83324>	..STUD,LOCKED-IN.....		EA		2	*	*	*		*	79	
P	F		5310-682-5877	RL28SB8 <83324>	..RING,LOCK,SERRATED.....		HD		12	*	*	*		REF	79	185
P	F		5310-200-7749	RL24SB7 <83324>	..RING,LOCK,SERRATED.....		HD		12	*	*	*		REF	79	
P	F		5340-200-4175	805735-00 <87991>	..INSERT,SCREW THREAD.....		EA		12	*	*	*		REF	79	186
P	F		5307-531-1414	SF101-9SA11A <83324>	..STUD,LOCKED-IN.....		EA		12	*	*	*		REF	79	
P	F		5310-682-5877	RL28SB8 <83324>	..RING,LOCK,SERRATED.....		HD		23	*	*	*		REF	79	187
P	F		5310-200-7749	RL24SB7 <83324>	..RING,LOCK,SERRATED.....		HD		23	*	*	*		REF	79	
P	F		5340-200-4175	805735-00 <87991>	..INSERT,SCREW THREAD.....		EA		23	*	*	*		REF	79	188
P	F		5307-531-1414	SF101-9SA11A <83324>	..STUD,LOCKED-IN.....		EA		23	*	*	*		REF	79	
P	F		5310-682-5877	RL28SB8 <83324>	..RING,LOCK,SERRATED.....		HD		4	*	*	*		REF	79	189
P	F		5310-200-7749	RL24SB7 <83324>	..RING,LOCK,SERRATED.....		HD		4	*	*	*		REF	79	

(1) SOURCE, MAINT AND REC CODE (a) SOURCE CODE	(b) MAINT CODE	(c) REC CODE	(2) FEDERAL STOCK NUMBER	REFERENCE NUMBER		(3) DESCRIPTION	MODELS USABLE ON CH-34C	(4) UNIT OF ISSUE	(5) QTY INC IN UNIT PACK	(6) QTY INC IN UNIT	(7) 30-DAY DS GS MAINT ALW (a) 1-20	(b) 21-50	(c) 51-100	(8) 1-YR ALW PER 100 EQUIP CNTGCY	(9) DEPOT MAINT ALW PER 100 EQUIP	(10) ILLUSTRATION (a) FIG NO	(b) ITEM NO
P	F		5340-200-4175	805735-00	<87991>	..INSERT,SCREW THREAD.....		EA		4	*	*	*		REF	79	190
P	F		5307-639-1617	SF101-9SA12A	<83324>	..STUD,LOCKED-IN.....		EA		4	*	*	*	-	REF	79	
				S1630-62019-3	<78286>	..BODY-SUMP.....		EA		1						79	191
			1560-336-0861	S1630-62412	<78286>	.TANK,FUEL,AIRCRAFT RH..... RPL-BY 1560-566-3249					RH Fuel					79	192
P	F		1560-566-3249	2F1-5-20074	<73842>	.TANK,FUEL,AIRCRAFT..... RH RPLS-- 1560-336-0861		EA		1	*	*	*	5	*	79	~~192~~
P	F		1560-544-0908	2F1-5-22920	<73842>	.CELL ASSEMBLY,FUEL TANK..... RH USBL EFF 55-4485 & SUBSEQUENT		EA		1	*	*	2	7	*	79	
		R	1560-332-3527	S1630-62410	<78286>	.TANK,FUEL,AIRCRAFT..... RPL-BY 1560-560-5404					LH Fuel					79	193
P	F	R	1560-560-5404	2F1-5-20072	<01297>	.TANK,FUEL,AIRCRAFT..... LH RPLS-- 1560-332-3527		EA		1	*	*	2		*	79	~~193~~
P	F		1560-544-0906	2F1-5-22918	<73842>	.CELL ASSEMBLY-FORWARD FUEL.. LH USBL EFF 55-4485 & SUBSEQUENT		EA		1	*	*	REF	REF	*	79	
P	F		1560-332-3569	2F1-5-20073	<01297>	.TANK,FUEL USBL EFF..... 53-4475 THRU 55-4484		EA		1	*	*	*		*	79	~~194~~
P	F		1560-544-0907	2F1-5-22919	<01297>	.CELL ASSEMBLY,FUEL TANK..... USBL EFF 55-4485 & SUBSEQUENT		EA		1	*	*	REF	REF	*	79	194
			~~346~~	S1630-62411							Center						
		R	1560-332-3529	S1630-62414	<78286>	.TANK,FUEL,AIRCRAFT..... RPL-BY 1560-566-3250										79	195
P	F	R	1560-566-3250	2F1-5-20076	<73842>	.TANK,FUEL,AIRCRAFT..... RH RPLS-- 1560-332-3529 USBL EFF 53-4475 THRU 55-4484		EA		1	*	*	2	10	*	79	~~195~~
											RH Belt						
P	F		1560-545-9799	2F1-5-22922	<73842>	.FUEL CELL-RH USBL EFF..... 55-4485 & SUBSEQUENT		EA		1	*	*	*		*	79	
			1560-332-3528	S1630-62413	<78286>	.TANK,FUEL,AIRCRAFT..... RPL-BY 1560-567-1126										79	196
P	F		1560-567-1126	2F1-5-20075	<73842>	.TANK,FUEL,AIRCRAFT-FORWARD.. FUEL-LH RPLS-- 1560-332-3528 USBL EFF 53-4475 THRU 55-9484		EA		1	*	*	2	10	*	79	~~196~~
											LH Belt						
P	F		1560-545-9798	2F1-5-22921	<73842>	.FUEL CELL-LH USBL EFF..... 55-4485 & SUBSEQUENT		EA		1	*	*	*	2	*	79	
P	F	R	2915-859-8472	RG11260A3	<51663>	PUMP,FUEL BOOSTER SEE FIG... 79 FOR NHA		EA		1	REF	REF	REF	REF	*	79A	
			5306-151-1092	MS20074-04-31	<96906>	.BOLT,MACHINE.....NOTE 1		EA		1	*	*	*		*	79A	1
			5310-167-0835	AN960-416L	<88044>	.WASHER,FLAT.....NOTE 1		HD		1	*	*	*		*	79A	2
			5330-248-3835	MS29513-010	<96906>	.PACKING,PREFORMED.....NOTE 2		EA		1	*	*	*		*	79A	3
				RA11322	<51663>	.CAP,FITTING.....NOTE 1		EA		1						79A	4
			5330-248-3848	MS29513-018	<96906>	.PACKING,PREFORMED.....NOTE 2		EA		1	*	*	*		*	79A	5
P	H		2915-535-6265	RB11321	<51663>	.ELBOW ASSEMBLY,FLARED TUBE..		EA		1	*	*	*		*	79A	6

(1) SOURCE, MAINT AND REC CODE (a) SOURCE CODE	(b) MAINT LEVEL	(c) REC CODE	(2) FEDERAL STOCK NUMBER	REFERENCE NUMBER	(3) DESCRIPTION	MODELS USABLE ON CH-34C	(4) UNIT OF ISSUE	(5) QTY INC IN UNIT PACK	(6) QTY INC IN UNIT	(7) 30-DAY DS-GS MAINT ALW (a) 1-20	(b) 21-50	(c) 51-100	(8) 1-YR ALW PER 100 EQUIP CNTGCY	(9) DEPOT MAINT ALW PER 100 EQUIP	(10) ILLUSTRATION (a) FIG NO	(b) ITEM NO
			5340-682-2119	NAS817-16	<80205> ..CAP,PROTECTIVE.....NOTE 1		EA		1	*	*	*		*	79A	
				RB12311	<51663> ..TUBE ASSEMBLY,METAL..NOTE 1		EA		1						79A	7
				RB12192	<51663> ..ADAPTER,STRAIGHT.....NOTE 1		EA		1						79A	8
			4730-222-1794	AN816-2D	<88044> ..ADAPTER STRAIGHT PIPE TO... TUBE NOTE 1		EA		1	*	*	*		*	79A	9
				RB12188	<51663> ..GUIDE CHECK VALVE....NOTE 1		EA		1						79A	10
			5330-298-4929	MS29512-02	<96906> ..PACKING,PREFORMED....NOTE 2		EA		1	*	*	*		*	79A	11
				RA15407	<51663> ..SPRING,HELICAL COMPRESSION. NOTE 1		EA		1						79A	12
			3110-183-9175	MS134352	<96906> ..BALL,BEARING.....NOTE 1		EA		1	*	*	*		*	79A	13
				RA10032-3	<51663> ..SCREW,MACHINE,FILLISTER.... HEAD NOTE 1		EA		2						79A	14
P	H		5330-202-1521	RB8358-515-8	<51663> ..PACKING WITH RETAINER..... NOTE 2		EA		4	*	*	*		*	79A	15
P	H		2915-859-8587	RD12189	<51663> ..HOUSING,SPRAY HEAD.....		EA		1	*	*	*		*	79A	16
			5330-248-3834	MS29513-009	<96906> ..PACKING,PREFORMED.....		EA		1	*	*	*		*	79A	17
P	H		2915-697-5771	RB11262	<51663> ..COVER,FUEL PUMP MOTOR.....		EA		1	*	*	*		*	79A	18
			4730-289-3019	MS9015-04	<96906> ..PLUG,MACHINE THREAD.....		EA		1	4	10	20	240	*	79A	19
			5330-248-3836	MS29513-012	<96906> ..PACKING,PREFORMED....NOTE 2		EA		1	*	*	*		*	79A	20
			5305-145-6971	AN503-8-6	<88044> ..SCREW,MACHINE.....NOTE 1		HD		3	*	*	*		*	79A	21
			5310-515-8058	AN960-8	<88044> ..WASHER,FLAT.....NOTE 1		HD		3	*	*	*		*	79A	22
P	H		2915-697-5776	RD11265	<51663> ..COVER SHROUD,FUEL PUMP.....		EA		1	*	*	*		*	79A	23
				RA11249	<51663> ..GASKET.....NOTE 1		EA		AR						79A	24
				RA11249-1	<51663> ..SHIM.....NOTE 1		EA		AR						79A	
				RA11249-2	<51663> ..SHIM.....NOTE 1		EA		AR						79A	
				RA11249-3	<51663> ..SHIM.....NOTE 1		EA		AR						79A	
			5330-265-1084	MS29513-131	<96906> ..PACKING,PREFORMED....NOTE 2		EA		2	12	31	61		*	79A	25
			5310-807-1467	MS21042-3	<96906> ..NUT,EXTENDED WASHER,HEXAGON NOTE 1		HD		1	*	*	*		*	79A	26
			5310-167-0818	AN960-10	<88044> ..WASHER,FLAT.....NOTE 1		HD		1	*	*	*		*	79A	27
				RA11227	<51663> ..KEY,MACHINE.....NOTE 1		EA		1						79A	28
P	H		2915-694-1562	RB11264-1	<51663> ..IMPELLER ASSEMBLY.....		EA		1	*	*	*		*	79A	29
				RA11253	<51663> ..SHIM.....NOTE 1		EA		AR						79A	30
				RA11253-1	<51663> ..SHIM.....NOTE 1		EA		AR						79A	
				RA11253-2	<51663> ..SHIM.....NOTE 1		EA		AR						79A	
				RA11253-3	<51663> ..SHIM.....NOTE 1		EA		AR						79A	
				RA11253-4	<51663> ..SHIM.....NOTE 1		EA		AR						79A	
P	H		5310-904-8809	RA11253-5	<51663> ..WASHER.....NOTE 1		EA		AR	*	*	*		*	79A	
			5330-248-3833	MS29513-008	<96906> ..PACKING,PREFORMED....NOTE 2		EA		1	3	7	15		*	79A	31
				RA11256	<51663> ..SEAL,STATIONARY,PUMP..... NOTE 1		EA		1						79A	32
				RA11234-1	<51663> ..SPRING,HELICAL COMPRESSION. NOTE 1		EA		1						79A	33
				RA11071	<51663> ..SPACER,RING.....NOTE 1		EA		1						79A	34
				RB12122-112	<51663> ..PACKING,PREFORMED....NOTE 2		EA		1						79A	35
			5340-804-9743	MS16625-1050	<96906> ..RING,RETAINING.....NOTE 1		EA		1	*	*	*		*	79A	36
				RA11231	<51663> ..WASHER,FLAT.....NOTE 1		EA		1						79A	37
				RA11229	<51663> ..GROMMET.....NOTE 2		EA		1						79A	38
P	H		6105-671-7471	DC10	<90299> ..MOTOR ASSEMBLY SEE..... FIG.79A <SHEET 2 OF 2> FOR BREAKDOWN		EA		1	*	*	*		*	79A	39
				RA11257	<51663> ..SLINGER,FUEL PUMP....NOTE 1		EA		1						79A	40

(1) SOURCE, MAINT AND REC CODE (a) SOURCE CODE	(b) MAINT LEVEL	(c) REC CODE	(2) FEDERAL STOCK NUMBER	REFERENCE NUMBER	(3) DESCRIPTION	MODELS USABLE ON CH-34C	(4) UNIT OF ISSUE	(5) QTY INC IN UNIT PACK	(6) QTY INC IN UNIT	(7) 30-DAY DS GS MAINT ALW (a) 1-20	(b) 21-50	(c) 51-100	(8) 1-YR ALW PER 100 EQUIP CNTGCY	(9) DEPOT MAINT ALW PER 100 EQUIP	(10) ILLUSTRATION (a) FIG NO	(b) ITEM NO
			5330-618-3755	MS29513-139 <96906>	..PACKING,PREFORMED....NOTE 2		EA		1	*	*	*		*	79A	41
				RB11226 <51663>	..GASKET.....NOTE 2		EA		1						79A	42
				RA11268 <51663>	..SCREEN ASSEMBLY.....NOTE 1		EA		1						79A	43
					ATTACHING PARTS											
			5305-207-0145	AN503-6-4 <88044>	..SCREW,MACHINE.....NOTE 1		EA		2	*	*	*		*	79A	44
			5310-167-0816	AN960-6 <88044>	..WASHER,FLAT.....NOTE 1		HD		1	*	*	*		*	79A	45
					---*---											
				RB11269 <51663>	..PLATE,IDENTIFICATION..... NOTE 1		EA		1						79A	46
					ATTACHING PARTS											
			5305-253-5603	MS21318-1 <96906>	..SCREW,DRIVE.....NOTE 1		HD		4	*	*	*		*	79A	47
					---*---											
P	H		2915-053-3908	RB11263-4 <51663>	..HOUSING ASSEMBLY.....		EA		1	*	*	*		*	79A	48
				L1204 <81983>	..PLUG,BREATHER.....NOTE 1		EA		1						79A	49
			5340-817-0912	NAS818-4 <80205>	..PLUG,PROTECTIVE,DUST AND... MOISTURE SEAL NOTE 1		EA		1	*	*	*		*	79A	
			5340-835-5626	NAS816-59 <80205>	..CAP,PROTECTIVE.....NOTE 1		EA		2	*	*	*		*	79A	
P	H		5305-861-0032	AS90210 <90299>	...SCREW,EXTERNALLY RELIEVED. BODY		EA		2	*	*	*		*	79A	50
				AS90206 <90299>	...BRUSH,ELECTRICAL....NOTE 1		EA		4						79A	51
					ATTACHING PARTS											
			5305-059-8248	MS35214-23 <96906>	...SCREW,MACHINE.....NOTE 1				4	*	*	*		*	79A	52
				1906 <78189>	...WASHER,LOCK.....NOTE 1		EA		4						79A	53
					---*---											
				AS90345 <90299>	...LEAD,ELECTRICAL.....NOTE 1		EA		1						79A	54
				AS98435 <90299>	...WIRE,SHIELDED.....NOTE 1		EA		1						79A	55
				31096 <00799>	...TERMINAL,LUG.....NOTE 1		EA		1						79A	56
P	H		5340-995-8801	AS90211 <90299>	...SPACER,SLEEVE.....		EA		1	*	*	*		*	79A	57
P	H		5305-083-2051	AS89548 <90299>	...SCREW.....NOTE 1		EA		1	*	*	*		*	79A	58
P	H		3110-605-0033	AS90666 <90299>	...BEARING,BALL,ANNULAR.....		EA		1	*	*	*		*	79A	59
P	H		6105-876-2433	AS90204 <51663>	...ARMATURE,MOTOR.....		EA		1	*	*	*		*	79A	60
P	H		3110-605-0033	AS90666 <90299>	...BEARING,BALL,ANNULAR.....		EA		1	*	*	*		*	79A	61
P	H		6105-671-7437	AS90200 <90299>	...STATOR,MOTOR.....		EA		1	*	*	*		*	79A	62
				AS98434 <90299>	....WIRE,SHIELDED.....NOTE 1		EA		1						79A	63
P	F		5940-503-9995	31879 <00779>	....TERMINAL,LUG.....NOTE 1		HD		3	*	*	*		*	79A	64
P	H		5977-673-8354	AS90207 <90299>	...HOLDER ASSEMBLY,INSULATED.		EA		2	*	*	*		*	79A	
					ATTACHING PARTS											
			5305-984-4988	MS35206-228 <96906>	...SCREW,MACHINE.....NOTE 1		HD		4	*	*	*		*	79A	65
				S25071 <90299>	...WASHER,SPLIT.....NOTE 1		EA		4						79A	66
					---*---											
				US68096 <90299>	....PIN,COTTER.....NOTE 1		HD		2						79A	67
				AS89734 <90299>	....SPRING,SPIRAL TORSION.... NOTE 1		EA		4						79A	68
				AS90208 <90299>	....SPACER,SLEEVE.....NOTE 1		EA		2						79A	69
P	H		5970-994-3292	US40388 <90299>	....INSULATOR,BRUSH HOLDER...		EA		2	*	*	*		*	79A	70
			5305-059-8248	MS35214-23 <96906>	.....SCREW,MACHINE.....NOTE 1				4	*	*	*		*	79A	
				1906 <78189>	.....WASHER,LOCK.....NOTE 1		EA		4						79A	
P	H		6105-536-0862	US40387 <90299>	.....BASE,BRUSH HOLDER.....		EA		2	*	*	*		*	79A	
			5320-956-5737	MS16535-54 <96906>	.....RIVET,TUBULAR.....		EA		3	*	*	*		*	79A	
P	H		5977-338-3589	AS90172 <51663>	.....HOLDER,BRUSH.....		EA		2	*	*	*		*	79A	
P	H		5977-338-3588	AS90205 <90299>	...HOLDER,BRUSH.....		EA		2	*	*	*		*	79A	72
					ATTACHING PARTS											

(1) SOURCE, MAINT AND REC CODE (a) SOURCE CODE	(b) MAINT LEVEL	(c) REC CODE	(2) FEDERAL STOCK NUMBER	REFERENCE NUMBER		(3) DESCRIPTION	MODELS USABLE ON CH-34C	(4) UNIT OF ISSUE	(5) QTY INC IN UNIT PACK	(6) QTY INC IN UNIT	(7) 30-DAY DS GS MAINT ALW (a) 1-20	(b) 21-50	(c) 51-100	(8) 1-YR ALW PER 100 EQUIP CNTGCY	(9) DEPOT MAINT ALW PER 100 EQUIP	(10) ILLUSTRATION (a) FIG NO	(b) ITEM NO
			5305-151-2297	AN507-440R4	<88044>	...SCREW,MACHINE.....		HD		4	*	*	*		*	79A	73
						---*---											
				US68096	<90299>	...PIN,COTTER.....NOTE 1		HD		2						79A	74
				AS89734	<90299>	...SPRING,SPIRAL TORSION..... NOTE 1		EA		4						79A	75
				AS90208	<90299>	...SPACER,SLEEVE.....NOTE 1		EA		2						79A	76
P	H		5305-861-0032	AS90210	<90299>	...SCREW,EXTERNALLY RELIEVED. BODY		EA		1	*	*	*		*	79A	77
P	H		2915-672-6066	RA22380	<51663>	PARTS KIT,FUEL PUMP,..... OVERHAUL U/O 2915-859-8472 SEE FUNCTIONAL GROUP 50 FOR COMPONENTS		EA		1	*	*	*	5	*	79A	
P	H		2915-974-0148	RA22432	<51663>	PARTS KIT,PUMP,CURE DATE..... U/O 2915-859-8472 SEE FUNCTIONAL GROUP 50 FOR COMPONENTS NOTE 1 COMPONENT OF KIT 2915-672-6066 NOTE 2 COMPONENT OF KIT 2915-974-0148		EA		1	*	2	2	14	*	79A	
P	F	R	2915-310-5389	20-1227-005	<70138>	FLOAT VALVE ASSEMBLY,FUEL.... RPLS-- 2915-323-4517 SEE FIG.79 FOR NHA		EA			*	REF	REF			79B	
P	D		2915-349-2135	20-0281-1	<70138>	.COVER,FUEL LEVEL CONTROL.... ATTACHING PARTS		EA		1					*	79B	1
			5305-271-7778	AN503-8-10	<88044>	.SCREW,MACHINE.....NOTE1		HD		6					*	79B	2
			5305-145-7012	AN503-8-12	<88044>	.SCREW,MACHINE.....NOTE1		HD		2					*	79B	3
			5310-515-8058	AN960-8	<88044>	.WASHER,FLAT.....		HD		8					*	79B	4
			5310-807-1467	MS21042-3	<96906>	.NUT,EXTENDED WASHER.....				8					*	79B	5
P	D		2915-305-2121	20-0106	<70138>	.CLIP,CONTROL VALVE,FUEL..... NOTE1		EA		3					*	79B	6
						---*---											
P	D		2915-639-8879	20-0097	<70138>	..PLATE,IDENTIFICATION.....		EA		1					*	79B	
				104626-58	<70138>	.PIN.....NOTE1		EA		1						79B	8
P	D		2915-321-2067	20-0101	<70138>	.FLOAT AND ARM ASSEMBLY.....		EA		1					*	79B	
			5310-905-8451	MS21083N06	<96906>	..NUT,SELF-LOCKING,HEXAGON...		HD		2					*	79B	9
X2	H		5306-639-7135	20-0069-1	<70138>	..BOLT.....		EA		1	*	*	*		*	79B	11
P	D		2915-328-2180	20-0100	<70138>	..WEIGHT,FUEL LEVER CONTROL.. VALVE		EA		1					*	79B	12
P	D		2915-328-2179	20-0099	<70138>	..FLOAT,VALVE-FUEL LEVEL..... CONTROL		EA		1					*	79B	14
P	D		2915-506-3456	31-0414-3	<70138>	.SEAT,FUEL LEVER CONTROL.....		EA		1					*	79B	
P	D		2915-302-4277	20-0070	<70138>	.BALL AND PIN ASSEMBLY.....		EA		1					*	79B	16
				20-0067	<70138>	.SPRING,HELICAL,COMPRESSION..		EA		1						79B	17

(1) SOURCE, MAINT AND REC CODE (a) SOURCE CODE	(b) MAINT LEVEL	(c) RECOVERY CODE	(2) FEDERAL STOCK NUMBER	REFERENCE NUMBER	(3) DESCRIPTION	MODELS USABLE ON CH-34C	(4) UNIT OF ISSUE	(5) QTY INC IN UNIT PACK	(6) QTY INC IN UNIT	(7) 30-DAY DS GS MAINT ALW (a) 1-20	(b) 21-50	(c) 51-100	(8) 1 YR ALW PER 100 EQUIP CNTGCY	(9) DEPOT MAINT ALW PER 100 EQUIP	(10) ILLUSTRATION (a) FIG NO	(b) ITEM NO
					CONTINUED NOTE 1										79B	17
P	D		2915-624-8595	20-0103-1 <70138>	.PLATE,VALVE,FUEL CONTROL....		EA		1					*	79B	18
P	D		2915-345-5538	20-0238-1 <70138>	.SPRING,HELICAL,COMPRESSION..		EA		1					*	79B	19
P	D		2915-328-2195	31-0737-1 <70138>	.DIAPHRAGM ASSEMBLY,VALVE.... NOTE 1		EA		1					*	79B	20
P	D		4820-654-3210	D12-05461S <70138>	.SCREEN.....		EA		1					*	79B	
P	D		2915-302-4278	20-0107-1 <70138>	.INLET ASSEMBLY,FUEL LEVEL...		EA		1					*	79B	21
P	F		2915-653-7212	20-0446-3 <70138>	PARTS KIT,VALVE ASSEMBLY..... FLOAT,CURE DATE U/O 2915-310-5389 SEE FUNCTIONAL GROUP 50 FOR COMPONENTS NOTE 1 COMPONENT OF KIT 2915-653-7212		EA		1	*	*	*		*	79B	
				S1630-62402-1 <78286>	CENTER PLIOCEL FUEL CELL..... INSTALLATION SEE FIG.77 FOR NHA										80	
P	O		1560-509-7572	416-1S58 <99321>	.CAP AND FLANGE ASSEMBLY,.... FUEL CELL ATTACHING PARTS		EA		1	REF	REF	REF		REF	80	1
			5306-182-2017	AN4H6A <88044>	.BOLT,MACHINE.....		HD		12	*	*	*		*	80	2
			5310-184-9001	AN960PD416L <88044>	.WASHER,FLAT.....		HD		12	*	*	*		*	80	
			5310-543-4443	MS20364-428A <96906>	.NUT,SELF-LOCKING,HEXAGON.... ---*---		HD		12	*	*	*		*	80	
P	O		1560-189-8412	S14-30-6029 <78286>	.GASKET RPLS-- 1560-663-8858		EA		2	REF	REF	REF		REF	80	3
P	O		1560-624-6158	S1630-62123-9 <78286>	.ELBOW,FUEL FILLER NECK..... RPLS-- 1560-544-0603, 4730-329-7114 ATTACHING PARTS		EA		1	*	*	2		*	80	4
			5306-182-1960	AN4H12A <88044>	.BOLT,MACHINE.....		HD		10	*	*	*		*	80	5
			5310-184-9001	AN960PD416L <88044>	.WASHER,FLAT.....		HD		10	*	*	*		*	80	
			5306-639-7701	MS2004H14 <96906>	.BOLT,INTERNAL WRENCHING.....		EA		2	*	*	*		*	80	6
			5310-184-9001	AN960PD416L <88044>	.WASHER,FLAT..... ---*---		HD		2	*	*	*		*	80	
P	O		1560-340-0408	S1630-62194 <78286>	.GASKET,FUEL CELL NECK..... RPLS-- 1560-332-3521		EA		1	REF	REF	REF		REF	80	7
P	O		1560-633-6978	S1630-62076-2 <78286>	.COLLAR,FUEL CELL.....		EA		1	REF	REF	REF		REF	80	8
P	O		1560-589-6073	S1630-62146 <78286>	.SPACER,FUEL CELL FILLER..... RPLS-- 1560-326-3468		EA		1	REF	REF	REF		REF	80	9
P	O		1560-606-7515	S1630-62061-1 <78286>	.GASKET,FILLER ELBOW,TUBE....		EA		1	REF	REF	REF		REF	80	10
P	O		1560-798-3634	S1630-62045-1 <78286>	.COVER,FUEL CELL-ACCESS..... ATTACHING PARTS		EA		4	*	REF	REF		REF	80	11
			5306-182-2061	AN3H10A <88044>	.BOLT,MACHINE.....		HD		16	*	*	*		*	80	12
			5310-167-0753	AN960PD10L <88044>	.WASHER,FLAT.....		HD		16	*	*	*		*	80	

(1) SOURCE, MAINT AND REC CODE (a)	(b)	(c)	(2) FEDERAL STOCK NUMBER	REFERENCE NUMBER	(3) DESCRIPTION	MODELS USABLE ON CH-34C	(4) UNIT OF ISSUE	(5) QTY INC IN UNIT PACK	(6) QTY INC IN UNIT	(7) 30-DAY DS GS MAINT ALW (a) 1-20	(b) 21-50	(c) 51-100	(8) 1-YR ALW PER 100 EQUIP CNTGCY	(9) DEPOT MAINT ALW PER 100 EQUIP	(10) ILLUSTRATION (a) FIG NO	(b) ITEM NO
					CONTINUED										80	
					---*---											
P	O		1560-663-4462	S1630-62047	<78286> .GASKET.....		EA		4	REF	REF	REF		REF	80	13
MF	F			S14-30-6034	<78286> .COVER,FUEL CELL ACCESSORY...		EA		4						80	14
					MAKEFR											
					AR 9535-232-0529 AL ALLY SH											
					ATTACHING PARTS											
			5306-182-2015	AN4H4A	<88044> .BOLT,MACHINE.....		HD		16	*	*	*		*	80	15
			5310-184-9001	AN960PD416L	<88044> .WASHER,FLAT.....		HD		16	*	*	*		*	80	
					---*---											
P	F		1560-189-8411	S14-30-6028	<78286> .GASKET.....		EA		4	REF	REF	REF		REF	80	16
P	F		1560-332-3523	S1630-62046	<78286> .SUPPORT ASSEMBLY,FUEL.....		EA		4	*	REF	REF		REF	80	17
					ATTACHING PARTS											
			5305-705-1640	MS24694S58	<96906> .SCREW,MACHINE.....		EA		2	*	*	*		*	80	18
					---*---											
MF	O			S1630-62045-4	<78286> .COVER ASSEMBLY,FUEL CELL....		EA		1						80	19
					ACCESS											
					MAKEFR											
					AR 9535-554-1412 AL ALLY SH											
					ATTACHING PARTS											
			5306-182-2061	AN3H10A	<88044> .BOLT,MACHINE.....		HD		16	*	*	*		*	80	20
			5310-167-0753	AN960PD10L	<88044> .WASHER,FLAT.....		HD		16	*	*	*		*	80	
					---*---											
X2	O			S1650-62136-25	<78286> ..SKID.....		EA		1						80	21
P	O		1560-798-3634	S1630-62045-1	<78286> ..COVER,FUEL CELL.....		EA		1	*	REF	REF		REF	80	23
P	O		1560-663-4462	S1630-62047	<78286> .GASKET.....		EA		1	REF	REF	REF		REF	80	24
MF	F			S14-30-6034	<78286> .COVER,FUEL CELL ACCESSORY...		EA		1						80	25
					MAKEFR											
					AR 9535-232-0529 AL ALLY SH											
					ATTACHING PARTS											
			5306-182-2015	AN4H4A	<88044> .BOLT,MACHINE.....		HD		16	*	*	*		*	80	26
			5310-184-9001	AN960PD416L	<88044> .WASHER,FLAT.....		HD		16	*	*	*		*	80	
					---*---											
P	F		1560-189-8411	S14-30-6028	<78286> .GASKET.....		EA		1	REF	REF	REF		REF	80	27
P	F		1560-332-3523	S1630-62046	<78286> .SUPPORT ASSEMBLY,FUEL.....		EA		1	*	REF	REF		REF	80	28
					ATTACHING PARTS											
			5305-705-1640	MS24694S58	<96906> .SCREW,MACHINE.....		EA		2	*	*	*		*	80	29
					---*---											
P	O		1560-570-0643	S1630-62027-3	<78286> .COVER ASSEMBLY,ACCESSORY....		EA		1	*	*	*		REF	80	30
					ATTACHING PARTS											
			5306-182-2060	AN3H7A	<88044> .BOLT,MACHINE.....		HD		20	*	*	*		*	80	31
			5310-167-0753	AN960PD10L	<88044> .WASHER,FLAT.....		HD		20	*	*	*		*	80	
					---*---											
P	O		1560-334-6356	S1630-62028	<78286> .GASKET,ACCESSORY COVER.....		EA		1	REF	REF	REF		REF	80	32
P	F		5930-518-4790	40031	<98505> .SWITCH,PRESSURE.....		EA		1	*	*	*		*	80	33
					ATTACHING PARTS											
			5306-182-2057	AN3H4A	<88044> .BOLT,MACHINE.....		HD		8	*	*	*		*	80	34
			5310-167-0753	AN960PD10L	<88044> .WASHER,FLAT.....		HD		8	*	*	*		*	80	
					---*---											
			5310-282-7823	MS24400D4	<96906> .NUT,PLAIN,HEXAGON.....		LL		1	*	*	*		*	80	35
			5330-250-0230	MS29513-22	<96906> .PACKING,PREFORMED.....		EA		1	*	REF	REF		*	80	
			4730-725-4351	MS24394D4	<96906> .ELBOW,TUBE.....		EA		1	*	*	*		*	80	

(1) SOURCE, MAINT AND REC CODE (a) SOURCE CODE	(b) MAINT LEVEL	(c) REC CODE	(2) FEDERAL STOCK NUMBER	REFERENCE NUMBER		(3) DESCRIPTION	MODELS USABLE ON CH-34C	(4) UNIT OF ISSUE	(5) QTY INC IN UNIT PACK	(6) QTY INC IN UNIT	(7) 30-DAY DS GS MAINT ALW (a) 1-20	(b) 21-50	(c) 51-100	(8) 1-YR ALW PER 100 EQUIP CNTGCY	(9) DEPOT MAINT ALW PER 100 EQUIP	(10) ILLUSTRATION (a) FIG NO	(b) ITEM NO
P	F		1560-663-4461	S1630-62078	<78286>	.GASKET.....		EA		1	2	4	7		*	80	36
P	F		5935-539-3740	163-0531	<97485>	.ADAPTER,CONNECTOR.....		EA		1	*	*	*		REF	80	37
P	F		5935-552-4682	163-0532	<97485>	.ADAPTER,CONNECTOR.....		EA		1	*	*	*		REF	80	38
P	F		5935-015-0499	163-0533	<97485>	.ADAPTER CONNECTOR.....		EA		1	*	*	*		REF	80	39
P	F		5935-627-0366	163-0534	<97485>	.ADAPTER,CONNECTOR.....		EA		1	REF	REF	REF		REF	80	40
MF	F			S1630-62048-10	<78286>	.COVER.....		EA		1						80	41
						MAKEFR											
						AR 9535-232-0378 AL ALLY SH											
						ATTACHING PARTS											
			5306-182-2015	AN4H4A	<88044>	.BOLT,MACHINE.....		HD		20	*	*	*		*	80	42
			5310-184-9001	AN960PD416L	<88044>	.WASHER,FLAT.....		HD		20	*	*	*		*	80	
						---*---											
				S1630-62048-1	<78286>	..BLANK-COVER.....		EA		1						80	43
P	F		1560-530-1052	S14-30-6218	<78286>	.GASKET.....		EA		1	REF	REF	REF		REF	80	44
P	F		1560-663-4461	S1630-62078	<78286>	.GASKET.....		EA		1	REF	REF	REF		REF	80	45
			1560-333-7043	S1630-62087	<78286>	.RING ASSEMBLY RPL-BY.....		EA			*	*	*			80	
						1560-591-0541											
P	F		1560-591-0541	S1630-62140	<78286>	.RING ASSEMBLY,SWITCH.....		EA		1	*	*	*		*	80	46
						RPLS-- 1560-333-7043											
P	F		5310-200-7749	RL24SB7	<83324>	..RING,LOCK,SERRATED.....		HD		8	*	*	*		REF	80	47
P	F		5340-597-3309	RD205SB7	<83324>	..INSERT,SCREW THREAD.....		EA		8	*	*	*		*	80	48
P	F		1560-327-3902	S1630-62026	<78286>	.SUPPORT ASSEMBLY,FUEL CELL..		EA		1	*	*	*		REF	80	50
						ATTACHING PARTS											
			5305-705-1640	MS24694S58	<96906>	.SCREW,MACHINE.....		EA		2	*	*	*		*	80	51
						---*---											
				MS8000E150A	<96906>	.HOSE ASSEMBLY.....		EA		1						80	52
						TETRAFLUOROETHYLENE											
			5310-282-7835	MS24400D8	<96906>	.NUT,PLAIN,HEXAGON.....		AX		1	*	*	*		*	80	53
			5330-263-8031	MS29512-8	<96906>	.PACKING,PREFORMED.....		EA		1	*	*	2	7	*	80	
			4730-684-7292	MS24398D8-4	<96906>	.REDUCER,TUBE.....		EA		1	*	*	*		*	80	
MF	F			S1630-62055-7	<78286>	.TUBE ASSEMBLY.....		EA		1						80	54
						MAKEFR											
						AR 4710-279-0948 TUBE											
						2 EA 4730-277-5353 SLEEVE											
						2 EA 4730-278-0288 NUT											
			4730-196-9581	AN816-8D	<88044>	.ADAPTER,STRAIGHT PIPE TO....		EA		1	*	*	*		*	80	58
						TUBE											
			4730-756-1937	MS24395D8	<96906>	.TEE,TUBE.....		EA		1	*	*	*		*	80	59
MF	F			S1630-62055-5	<78286>	.TUBE ASSEMBLY.....		EA		1						80	60
						MAKEFR											
						AR 4710-279-0948 TUBE											
						2 EA 4730-277-5373 SLEEVE											
						2 EA 4730-287-0288 NUT											
			1650-486-2773	11-344-75	<45681>	.VALVE ASSEMBLY,SWING CHECK..		EA		1	*	*	*		*	80	
						RPL-BY 4820-289-1478											
P	F		4820-289-1478	1111-517703	<92003>	.VALVE,CHECK RPLS--.....		EA		1	*	*	*		*	80	64
						1650-486-2773											
MF	F			S1630-62055-9	<78286>	.TUBE ASSEMBLY.....		EA		1						80	65
						MAKEFR											
						AR 4710-279-0948 TUBE											
						2 EA 4730-277-5373 SLEEVE											
						2 EA 4730-287-0288 NUT											

(1) SOURCE, MAINT AND REC CODE (a) SOURCE CODE	(b) MAINT LEVEL	(c) REC CODE	(2) FEDERAL STOCK NUMBER	REFERENCE NUMBER	(3) DESCRIPTION	MODELS USABLE ON CH-34C	(4) UNIT OF ISSUE	(5) QTY INC IN UNIT PACK	(6) QTY INC IN UNIT	(7) 30-DAY DS/GS MAINT ALW (a) 1-20	(b) 21-50	(c) 51-100	(8) 1-YR ALW PER 100 EQUIP CNTGCY	(9) DEPOT MAINT ALW PER 100 EQUIP	(10) ILLUSTRATION (a) FIG NO	(b) ITEM NO
			4730-684-6915	MS243920B	<96906> .NIPPLE,TUBE.....		EA		1	*	*	REF	REF	*	80	69
			5330-263-8031	MS29512-8	<96906> .PACKING,PREFORMED.....		EA		1	*	*	REF	REF	*	80	
P	C		6680-556-8983	165-0460-1592A	<83296> .TRANSMITTER,LIQUID..... QUANTITY USBL EFF 53-4530 THRU 55-4504		EA		1	*	*	2		*	80	70
P	F		6680-624-8570	165-0460-1592B	<97485> .TRANSMITTER,LIQUID..... QUANTITY USBL EFF 56-4284 & SUBSEQUENT		EA		1	*	*	2		*	80	
					ATTACHING PARTS											
			5306-206-6281	AN30DH3A	<88044> .BOLT,MACHINE.....		EA		4	*	*	*		*	80	71
			5340-726-3174	NAS43DD3-32	<80205> .SPACER,SLEEVE.....		EA		4	*	*	*		*	80	
			5310-261-8278	MS35338-100	<96906> .WASHER,LOCK.....		HD		2	*	*	*		*	80	
					---*---											
X2	F		1560-883-1699	S1630-62081	<78286> .BRACKET ASSEMBLY.....		EA		1	2	2	4		*	80	72
					ATTACHING PARTS											
			5306-182-2017	AN4H6A	<88044> .BOLT,MACHINE.....		HD		2	*	*	*		*	80	73
			5310-184-9001	AN960PD416L	<88044> .WASHER,FLAT.....		HD		2	*	*	*		*	80	
					---*---											
X2	F			S1630-62081-1	<78286> ..BRACKET.....		EA		1						80	78
X2	F			S1630-62092	<78286> .BRACKET ASSEMBLY.....		EA		1						80	79
					ATTACHING PARTS											
			5306-182-2017	AN4H6A	<88044> .BOLT,MACHINE.....		HD		3	*	*	*		*	80	80
			5310-184-9001	AN960PD416L	<88044> .WASHER,FLAT.....		HD		3	*	*	*		*	80	
					---*---											
MF	F			S1630-62092-1	<78286> ..BRACKET.....		EA		1						80	85
					MAKEFR											
					AR 9535-554-1412 AL-ALLY-SH											
			1560-326-3470	S1630-62043	<78286> .GASKET RPL-BY 1560-589-3781										80	
P	F		1560-589-3781	S1630-62043-1	<78286> .FLANGE,SUMP SEALING,FUEL.... CELL RPLS-- 1560-326-3470		EA		1	2	4	8		*	80	86
					ATTACHING PARTS											
			5306-182-2017	AN4H6A	<88044> .BOLT,MACHINE.....		HD		27	*	*	*		*	80	87
			5310-184-9001	AN960PD416L	<88044> .WASHER,FLAT.....		HD		27	*	*	*		*	80	
			5310-543-4443	MS20364-428A	<96906> .NUT,SELF-LOCKING,HEXAGON....		HD		27	*	*	*		*	80	
					---*---											
P	F		1560-566-4289	S1630-62124	<78286> .FITTING,FUEL CELL.....		EA		2	*	*	*		*	80	88
					ATTACHING PARTS											
			5306-182-1964	AN4H16A	<88044> .BOLT,MACHINE.....		HD		4	*	*	*		*	80	89
			5310-184-9001	AN960PD416L	<88044> .WASHER,FLAT.....		HD		4	*	*	*		*	80	
					---*---											
P	F		1560-663-4465	S1630-62036	<78286> .GASKET.....		EA		2	REF	REF	REF		REF	80	90
MF	F			S1630-62055-97	<78286> .TUBE ASSEMBLY.....		EA		2						80	91
					MAKEFR											
					AR 4710-277-3627 TUBE											
					2 EA 4730-287-0285 NUT											
					2 EA 4730-287-0067 SLEEVE											
			4730-287-0285	AN818-12D	<88044> ..NUT,TUBE COUPLING.....		EA		2	*	*	*		*	80	92
			4730-287-0067	MS20819-12D	<96906> ..SLEEVE,FLARED TUBE FITTING.		EA		2	*	*	*		*	80	93
			4730-684-6914	MS24392D12	<96906> .NIPPLE,TUBE.....		EA		2	*	*	*		*	80	95
			5330-263-8033	MS29512-12	<96906> .PACKING,PREFORMED.....		EA		2	*	*	*		*	80	96
P	O		2915-097-0319	83001-2	<75361> .COCK,POPPET DRAIN.....		EA		1	REF	REF	REF		REF	80	97
P	O		1560-090-4484	MS26541-1	<96906> .COCK-WATER DETECTOR RPLS...		EA		1	*	REF	REF		REF	80	98

(1) SOURCE, MAINT AND REC CODE (a) SOURCE CODE	(b) MAINT LEVEL	(c) REC CODE	(2) FEDERAL STOCK NUMBER	REFERENCE NUMBER		(3) DESCRIPTION	MODELS USABLE ON CH-34C	(4) UNIT OF ISSUE	(5) QTY INC IN UNIT PACK	(6) QTY INC IN UNIT	(7) 30-DAY DS GS MAINT ALW (a) 1-20	(b) 21-50	(c) 51-100	(8) 1-YR ALW PER 100 EQUIP CNTGCY	(9) DEPOT MAINT ALW PER 100 EQUIP	(10) ILLUSTRATION (a) FIG NO	(b) ITEM NO
						CONTINUED										80	98
						1680-569-2570											
P	F		1560-544-0912	S1630-62226	<78286>	.ADAPTER,FUEL SYSTEM.....		EA		1	*	REF	REF		REF	80	99
P	O		1560-633-6979	S1630-62409	<78286>	.GASKET.....		EA		1	REF	REF	REF		REF	80	100
X2	F		4730-640-5854	AN933D3	<88044>	.PLUG,PIPE.....		EA		1	*	*	*		*	80	101
P	F		1560-591-6673	S1630-62145	<78286>	.FITTING.....		EA		1	*	REF	REF		REF	80	102
			5330-250-0230	MS29513-22	<96906>	.PACKING,PREFORMED.....		EA		1	*	REF	REF		*	80	103
P	O		4730-203-0721	S1630-62030	<78286>	.PLUG,MACHINE THREAD.....		EA		1	*	REF	REF		REF	80	104
			5330-263-8034	MS29512-16	<96906>	.PACKING,PREFORMED.....		EA		1	*	*	REF		*	80	105
P	O		1560-544-0911	S1630-62225	<78286>	.SPRING,FUEL SUMP STRAINER...		EA		1	*	*	*		REF	80	106
						COMPRESSION RPLS--											
						1560-326-3474											
P	O		1560-544-0909	S1630-62223	<78286>	.STRAINER ASSEMBLY,FUEL.....		EA		1	*	REF	REF		REF	80	107
						SUMP RPLS--											
						1560-334-6357,											
						1560-505-8493											
P	O		1560-522-8897	S1630-62131-2	<78286>	.HOUSING RPLS--.....		EA		1	*	*	REF		REF	80	111
						1560-327-3905											
						ATTACHING PARTS											
			5306-182-2017	AN4H6A	<88044>	.BOLT,MACHINE.....		HD		2	*	*	*		*	80	112
			5310-184-9001	AN960PD416L	<88044>	.WASHER.....		HD		2	*	*	*		*	80	
			5310-543-4443	MS20364-428A	<96906>	.NUT,SELF-LOCKING,HEXAGON....		HD		2	*	*	*		*	80	
						---*---											
			5330-263-8033	MS29512-12	<96906>	.PACKING,PREFORMED.....		EA		1	*	*	*		*	80	113
P	O		1560-550-6491	S1630-62064-1	<78286>	.GASKET.....		EA		1	REF	REF	REF		REF	80	114
			1560-795-1901	S1630-62227	<78286>	.ADAPTER,FUEL SUMP STRAIN....		EA								80	115
						OBS-AFT-CMPL-W											
						TM1-1H-34A-582											
P	F		1560-620-4121	S1630-62224-1	<78286>	.STAND,PIPE FUEL SUMP.....		EA		1	REF	REF	REF		REF	80	116
						STRAINER RPLS--											
						1560-544-0910											
P	O		1560-550-6491	S1630-62064-1	<78286>	.GASKET.....		EA		1	REF	REF	REF		REF	80	117
P	F	R	2915-202-5827	RG11250	<51663>	.PUMP ASSEMBLY,FUEL.....		EA		1	2	2	3	31	*	80	118
						SEE FIG.81A FOR BREAKDOWN											
						ATTACHING PARTS											
			5306-182-2017	AN4H6A	<88044>	.BOLT,MACHINE.....		HD		12	*	*	*		*	80	119
			5310-184-9001	AN960PD416L	<88044>	.WASHER,FLAT.....		HD		12	*	*	*		*	80	
			5310-543-4443	MS20364-428A	<96906>	.NUT,SELF-LOCKING,HEXAGON....		HD		12	*	*	*		*	80	
						---*---											
P	F		2915-291-6328	RB11226	<51663>	.GASKET.....		EA		1	*	*	*	REF	*	80	120
			1560-567-1104	S1630-62150-1	<78286>	.SUMP ASSEMBLY,CENTER AND....		EA			*	*	*			80	
						AFT FUEL CELLS OBS-AFT-											
						CMPL-W TM1-1H-34A-582											
P	F		1560-340-0403	S1630-62150	<78286>	.SUMP STUDDING ASSEMBLY.....		EA		2	*	*	*		*	80	121
						ATTACHING PARTS											
			5306-182-2058	AN3H5A	<88044>	.BOLT,MACHINE.....		EA		4	*	*	*		*	80	122
			5310-167-0753	AN960PD10L	<88044>	.WASHER,FLAT.....		HD		4	*	*	*		*	80	
						---*---											
			5310-282-7834	MS24400D10	<96906>	.NUT,PLAIN.....		EA		3	*	*	*		*	80	123
			5310-187-2405	AN960PD1416	<88044>	.WASHER,FLAT.....		EA		6	*	*	*		*	80	124
P	F		1560-626-7273	S1630-62143	<78286>	.FITTING ASSEMBLY RPLS--....		EA		1	*	REF	REF		REF	80	125
						1560-544-0935,											

(1) SOURCE, MAINT AND REC CODE (a) SOURCE CODE	(b) MAINT LEVEL	(c) REC LEVEL	(2) FEDERAL STOCK NUMBER	REFERENCE NUMBER	(3) DESCRIPTION	MODELS USABLE ON CH-34C	(4) UNIT OF ISSUE	(5) QTY INC IN UNIT PACK	(6) QTY INC IN UNIT	(7) 30-DAY DS/GS MAINT ALW (a) 1-20	(b) 21-50	(c) 51-100	(8) 1-YR ALW PER 100 EQUIP CNTGCY	(9) DEPOT MAINT ALW PER 100 EQUIP	(10) ILLUSTRATION (a) FIG NO	(b) ITEM NO
					CONTINUED										80	125
					1560-565-5614,											
					1560-575-2036,&											
					1560-575-2037											
					ATTACHING PARTS											
			5306-182-2017	AN4H6A <88044>	.BOLT,MACHINE.....		HD		3	*	*	*		*	80	126
			5310-184-9001	AN960PD416L <88044>	.WASHER,FLAT.....		HD		3	*	*	*		*	80	
			5310-543-4443	MS20364-428A <96906>	.NUT,SELF-LOCKING,HEXAGON....		HD		3	*	*	*		*	80	
			5305-180-0010	AN525-10R8 <88044>	.SCREW,MACHINE.....		HD		2	*	*	*		*	80	127
			5310-167-0753	AN960PD10L <88044>	.WASHER,FLAT.....		HD		4	*	*	*		*	80	
					---*---											
P	F		5310-682-5877	RL28SB8 <83324>	..RING,LOCK,SERRATED.....		HD		3	*	*	*		REF	80	128
P	F		5340-200-4175	805735-00 <87991>	..INSERT,SCREW THREAD.....		EA		3	*	*	*		REF	80	129
P	F		5310-200-7749	RL24SB7 <83324>	..RING,LOCK,SERRATED.....		HD		2	*	*	*		REF	80	130
P	F		5340-597-3309	RD205SB7 <83324>	..INSERT,SCREW THREAD.....		EA		2	*	*	*		REF	80	131
			5306-182-1964	AN4H16A <88044>	.BOLT,MACHINE.....		HD		12	*	*	*		*	80	133
			5310-187-2354	AN960PD416 <88044>	.WASHER,FLAT.....		HD		12	*	*	*		*	80	
			5310-184-9001	AN960PD416L <88044>	.WASHER,FLAT.....		HD		12	*	*	*		*	80	
			5310-543-4443	MS20364-428A <96906>	.NUT,SELF-LOCKING,HEXAGON....		HD		12	*	*	*		*	80	
P	F		1560-657-2903	S1630-62147 <78286>	.FLANGE,FUEL CELL.....		EA		4	2	2	5		*	80	136
					INTERCONNECTING											
					ATTACHING PARTS											
			5306-292-8252	AN4H7A <88044>	.BOLT,MACHINE.....		HD		12	*	*	*		*	80	137
			5310-187-2354	AN960PD416 <88044>	.WASHER,FLAT.....		HD		24	*	*	*		*	80	
			5310-543-4443	MS20364-428A <96906>	.NUT,SELF-LOCKING,HEXAGON....		HD		12	*	*	*		*	80	
					---*---											
			4730-595-4505	S1630-62050 <78286>	.CONNECTOR RPL-BY.....										80	
					1560-524-5118											
P	F		1560-524-5118	S1630-62139 <78286>	.CONNECTOR RPLS--.....		EA		1	*	*	2		*	80	138
					4730-595-4505											
			1560-334-6359	S1630-62077 <78286>	.CONNECTOR RPL-BY.....										80	
					1560-566-4290											
P	F		1560-566-4290	S1630-62134 <78286>	.FITTING,FUEL TRANSFER.....		EA		1	*	*	*		*	80	139
					RPLS-- 1560-334-6359											
					ATTACHING PARTS											
			5306-182-2017	AN4H6A <88044>	.BOLT,MACHINE.....		HD		6	*	*	*		*	80	140
			5310-187-2354	AN960PD416 <88044>	.WASHER,FLAT.....		HD		6	*	*	*		*	80	
					---*---											
P	F		1560-340-0371	S1630-62033 <78286>	.GASKET.....		EA		1	REF	REF	REF		REF	80	141
P	F		1560-028-1015	S1630-62006 <78286>	.FUEL CELL ASSEMBLY.....		EA		1	*	*	*	5	*	80	142
P	F		1560-332-6535	2F1-4-20990 <73842>	.TANK,FUEL,AIRCRAFT.....		EA		1	*	*	2		*	80	
P	F		1560-028-1016	2F1-4-18302 <78286>	.FUEL CELL ASSEMBLY.....		EA		1	*	2	2	12	*	80	143
P	F		1560-332-6536	2F1-4-20991 <73842>	.TANK,FUEL,AIRCRAFT.....		EA		1	*	*	2		*	80	
P	F		1560-028-1017	2F1-4-18303 <73842>	.TANK,FUEL, AIRCRAFT.....		EA		1	*	*	2	7	*	80	144
P	F		1560-332-6537	2F1-4-20992 <73842>	.TANK,FUEL,AIRCRAFT-LH.....		EA		1	*	*	*		*	80	

(1) SOURCE, MAINT AND REC CODE (a) SOURCE CODE	(b) MAINT LEVEL	(c) REC CODE	(2) FEDERAL STOCK NUMBER	REFERENCE NUMBER		(3) DESCRIPTION	MODELS USABLE ON CH-34C	(4) UNIT OF ISSUE	(5) QTY INC IN UNIT PACK	(6) QTY INC IN UNIT	(7) 30-DAY DS GS MAINT ALW (a) 1-20	(b) 21-50	(c) 51-100	(8) 1-YR ALW PER 100 EQUIP CNTGCY	(9) DEPOT MAINT ALW PER 100 EQUIP	(10) ILLUSTRATION (a) FIG NO	(b) ITEM NO
				S1630-62403-1	<78286>	AFT PLIOCEL FUEL CELL..... INSTALLATION SEE FIG.77 FOR NHA										81	
P	O		1560-509-7572	416-1S58	<99321>	.CAP AND FLANGE ASSEMBLY,.... FUEL CELL		EA		1	REF	REF	REF		REF	81	1
						ATTACHING PARTS											
			5306-182-2017	AN4H6A	<88044>	.BOLT,MACHINE.....		HD		12	*	*	*		*	81	2
			5310-184-9001	AN960PD416L	<88044>	.WASHER,FLAT.....		HD		12	*	*	*		*	81	
			5310-187-2354	AN960PD416	<88044>	.WASHER,FLAT.....		HD		12	*	*	*		*	81	
			5310-543-4443	MS20364-428A	<96906>	.NUT,SELF-LOCKING,HEXAGON....		HD		12	*	*	*		*	81	
						---*---											
P	O		1560-189-8412	S14-30-6029	<78286>	.GASKET RPLS-- 1560-663-8858		EA		2	REF	REF	REF		REF	81	3
P	O		1560-624-6158	S1630-62123-9	<78286>	.ELBOW,FUEL FILLER NECK..... RPLS-- 1560-544-0603, 4730-329-7114		EA		1	*	*	REF		REF	81	4
						ATTACHING PARTS											
			5306-182-1960	AN4H12A	<88044>	.BOLT,MACHINE.....		HD		10	*	*	*		*	81	5
			5310-184-9001	AN960PD416L	<88044>	.WASHER,FLAT.....		HD		10	*	*	*		*	81	
			5306-639-7701	MS20004H14	<96906>	.BOLT,INTERNAL WRENCHING.....		EA		2	*	*	*		*	81	6
			5310-184-9001	AN960PD416L	<88044>	.WASHER,FLAT.....		HD		2	*	*	*		*	81	
						---*---											
P	O		1560-340-0408	S1630-62194	<78286>	.GASKET,FUEL CELL NECK..... RPLS-- 1560-332-3521		EA		1	REF	REF	REF		REF	81	7
P	O		1560-633-6978	S1630-62076-2	<78286>	.COLLAR,FUEL CELL.....		EA		1	REF	REF	REF		REF	81	8
P	O		1560-589-6073	S1630-62146	<78286>	.SPACER,FUEL CELL FILLER..... RPLS-- 1560-326-3468		EA		1	REF	REF	REF		REF	81	9
P	O		1560-606-7515	S1630-62061-1	<78286>	.GASKET,FILLER ELBOW,TUBE....		EA		1	REF	REF	REF		REF	81	10
P	O		1560-798-3634	S1630-62045-1	<78286>	.COVER,FUEL CELL ACCESS.....		EA		4	*	REF	REF		REF	81	11
MF	O			S1630-62045-4	<78286>	.COVER ASSEMBLY,FUEL CELL.... ACCESS		EA		1						81	
						MAKEFR											
						AR 9535-554-1412 AL ALLY SH											
						ATTACHING PARTS											
			5306-182-2061	AN3H10A	<88044>	.BOLT,MACHINE.....		HD		16	*	*	*		*	81	12
			5310-167-0753	AN960PD10L	<88044>	.WASHER,FLAT.....		HD		16	*	*	*		*	81	
						---*---											
P	O		1560-663-4462	S1630-62047	<78286>	.GASKET.....		EA		5	REF	REF	REF		REF	81	13
MF	F			S14-30-6034	<78286>	.COVER-FUEL CELL ACCESSORY...		EA		5						81	14
						MAKEFR											
						AR 9535-232-0529 AL ALLY SH											
						ATTACHING PARTS											
			5306-182-2015	AN4H4A	<88044>	.BOLT,MACHINE.....		HD		16	*	*	*		*	81	15
			5310-184-9001	AN960PD416L	<88044>	.WASHER,FLAT.....		HD		16	*	*	*		*	81	
						---*---											
P	F		1560-189-8411	S14-30-6028	<78286>	.GASKET.....		EA		5	REF	REF	REF		REF	81	16
P	F		1560-332-3523	S1630-62046	<78286>	.SUPPORT ASSEMBLY,FUEL.....		EA		5	*	REF	REF		REF	81	17
						ATTACHING PARTS											
			5305-719-5403	MS24694S	<96906>	.SCREW,MACHINE.....		HD		2	*	*	*		*	81	18
						---*---											
P	O		1560-570-0643	S1630-62027-3	<78286>	.COVER ASSEMBLY,ACCESSORY....		EA		1	*	*	*		REF	81	19
						ATTACHING PARTS											
			5306-182-2061	AN3H10A	<88044>	.BOLT,MACHINE.....		HD		20	*	*	*		*	81	20

(1) SOURCE, MAINT AND REC CODE (a) SOURCE CODE	(b) MAINT LEVEL	(c) REC CODE	(2) FEDERAL STOCK NUMBER	REFERENCE NUMBER	(3) DESCRIPTION	MODELS USABLE ON CH-34C	(4) UNIT OF ISSUE	(5) QTY INC IN UNIT PACK	(6) QTY INC IN UNIT	(7) 30-DAY DS GS MAINT ALW (a) 1-20	(b) 21-50	(c) 51-100	(8) 1-YR ALW PER 100 EQUIP CNTGCY	(9) DEPOT MAINT ALW PER 100 EQUIP	(10) ILLUSTRATION (a) FIG NO	(b) ITEM NO
			5310-167-0753	AN960PD10L	<88044> .WASHER,FLAT.....		HD		20	*	*	*		*	81	
					---*---											
P	O		1560-334-6356	S1630-62028	<78286> .GASKET,ACCESSORY COVER.....		EA		1	REF	REF	REF		REF	81	21
P	F		5930-518-4790	40031	<98505> .SWITCH,PRESSURE.....		EA		1	*	*	*		REF	81	22
					ATTACHING PARTS											
			5306-182-2057	AN3H4A	<88044> .BOLT,MACHINE.....		HD		8	*	*	*		*	81	23
			5310-167-0753	AN960PD10L	<88044> .WASHER,FLAT.....		HD		8	*	*	*		*	81	
					---*---											
			5310-282-7823	MS24400D4	<96906> .NUT,PLAIN,HEXAGON.....		LL		1	*	*	*		*	81	24
			5330-250-0230	MS29513-22	<96906> .PACKING,PREFORMED.....		EA		1	*	REF	REF		*	81	
			4730-725-4351	MS24394D4	<96906> .ELBOW,TUBE.....		EA		1	*	*	*		*	81	
P	F		1560-663-4461	S1630-62078	<78286> .GASKET.....		EA		1	REF	REF	REF		REF	81	25
P	F		5935-539-3740	163-0531	<97485> .ADAPTER,CONNECTOR.....		EA		1	*	*	*		REF	81	26
P	F		5935-552-4682	163-0532	<97485> .ADAPTER,CONNECTOR.....		EA		1	*	*	*		REF	81	27
P	F		5935-015-0499	163-0533	<97485> .ADAPTER,CONNECTOR.....		EA		1	*	*	*		REF	81	28
P	F		5935-627-0366	163-0534	<77272> .ADAPTER,CONNECTOR.....		EA		1	REF	REF	REF		REF	81	29
MF	F			S1630-62048-10	<78286> .COVER.....		EA		1						81	30
					MAKEFR											
					AR 9535-232-0378 AL ALLY SH											
					ATTACHING PARTS											
			5306-182-2015	AN4H4A	<88044> .BOLT,MACHINE.....		HD		20	*	*	*		*	81	31
			5310-184-9001	AN960PD416L	<88044> .WASHER,FLAT.....		HD		20	*	*	*		*	81	
					---*---											
P	F		1560-530-1052	S14-30-6218	<78286> .GASKET.....		EA		1	REF	REF	REF		REF	81	33
P	F		1560-663-4461	S1630-62078	<78286> .GASKET.....		EA		1	REF	REF	REF		REF	81	34
P	F		1560-591-0541	S1630-62140	<78286> .RING ASSEMBLY,SWITCH.....		EA		1	*	*	*		REF	81	35
					RPLS-- 1560-333-7043											
P	F		5310-200-7749	RL24SB7	<83324> ..RING,LOCK,SERRATED.....		HD		8	*	*	*		REF	81	36
P	F		5340-597-3309	RD205SB7	<83324> ..INSERT,SCREW THREAD.....		EA		8	*	*	*		REF	81	37
P	F		1560-327-3902	S1630-62026	<78286> .SUPPORT ASSEMBLY,FUEL CELL..		EA		1	*	*	*		REF	81	39
					ATTACHING PARTS											
			5305-719-5403	MS24694S54	<96906> .SCREW,MACHINE.....		HD		2	*	*	*		*	81	40
					---*---											
P	O		4720-977-1069	R258EADC0150	<50599> .HOSE ASSEMBLY.....		EA		1	*	*	*		*	81	41
MF	F			S1630-62055-3	<78286> .TUBE ASSEMBLY.....		EA		1						81	42
					MAKEFR											
					AR 4710-279-0948 TUBE											
					2 EA 4730-277-5373 SLEEVE											
					2 EA 4730-287-0288 NUT											
				S1630-62055-4	<78286> ..SLEEVE.....		EA		1						81	45
			4730-196-9581	AN816-8D	<88044> .ADAPTER,STRAIGHT,PIPE TO....		EA		1	*	*	*		*	81	46
					TUBE											
			4730-684-6915	MS24392D8	<96906> .NIPPLE,TUBE.....		EA		1	*	*	REF	REF	*	81	47
			5330-263-8031	MS29512-8	<96906> .PACKING,PREFORMED.....		EA		3	*	*	REF	REF	*	81	
			4730-277-5055	AN938D8	<88044> .TEE,TUBE.....		EA		1	*	REF	REF		*	81	
			4730-828-1395	MS24399D10	<96906> .REDUCER,TUBE.....		EA		1	*	*	*		*	81	
P	F		4820-289-1478	1111-517703	<92003> .VALVE,CHECK RPLS--.....		EA		1	*	*	*		REF	81	48
					1650-486-2773											
MF	F			S1630-62055-1	<78286> .TUBE ASSEMBLY.....		EA		1						81	49
					MAKEFR											
					AR 4710-279-0948 TUBE											
					2 EA 4730-287-1028 SLEEVE											

(1) SOURCE, MAINT AND REC CODE (a) SOURCE CODE	(b) MAINT LEVEL	(c) REC CODE	(2) FEDERAL STOCK NUMBER	REFERENCE NUMBER	(3) DESCRIPTION	MODELS USABLE ON CH-34C	(4) UNIT OF ISSUE	(5) QTY INC IN UNIT PACK	(6) QTY INC IN UNIT	(7) 30-DAY DS GS MAINT ALW (a) 1-20	(b) 21-50	(c) 51-100	(8) 1-YR ALWPER 100 EQUIP CNTGCY	(9) DEPOT MAINT ALWPER 100 EQUIP	(10) ILLUSTRATION (a) FIG NO	(b) ITEM NO
					CONTINUED										81	49
					2 EA 4730-277-5358 NUT											
			6680-515-5348	165-0461-1443 <83296>	.TRANSMITTER,LIQUID.....										81	
					QUANTITY RPL-BY											
					6680-557-0634											
P	O		6680-557-0634	165-0460-1593A <83296>	.TRANSMITTER RPLS--.....		EA		1	*	2	2	14	*	81	53
					6680-515-5348											
					USBL EFF 53-4530 THRU											
					55-4504											
P	F	R	6680-624-8573	165-2460-1593B <97485>	.TRANSMITTER,LIQUID.....		EA		1	*	*	*		*	81	
					QUANTITY RPLS--											
					6620-766-6466 USBL EFF											
					56-4284&SUBSEQUENT											
					ATTACHING PARTS											
			5306-206-6281	AN3DDH3A <88044>	.BOLT,MACHINE.....		EA		4	*	*	*		*	81	54
P	F		5340-726-3174	NAS43DD3-32 <80205>	.SPACER,SLEEVE.....		EA		4	*	*	*		REF	81	
			5310-261-8278	MS35338-100 <96906>	.WASHER.....		HD		2	*	*	*		*	81	
					---*---											
X2	F		1560-883-1699	S1630-62081 <78286>	.BRACKET ASSEMBLY.....		EA		1	REF	REF	REF			81	55
					ATTACHING PARTS											
			5306-182-2017	AN4H6A <88044>	.BOLT,MACHINE.....		HD		2	*	*	*		*	81	56
			5310-184-9001	AN960PD416L <88044>	.WASHER,FLAT.....		HD		2	*	*	*		*	81	
					---*---											
MF	F			S1630-62092-1 <78286>	..BRACKET,PROBE SUPPORT.....		EA		1						81	68
					MAKEFR											
					AR 9535-554-1412 AL ALLY SH											
P	F		1560-589-3781	S1630-62043-1 <78286>	.FLANGE,SUMP SEALING FUEL....		EA		1	REF	REF	REF		REF	81	69
					CELL RPLS-- 1560-326-3470											
					ATTACHING PARTS											
			5306-182-2017	AN4H6A <88044>	.BOLT.....		HD		27	*	*	*		*	81	70
			5310-184-9001	AN960PD416L <88044>	.WASHER,FLAT.....		HD		27	*	*	*		*	81	
			5310-543-4443	MS20364-428A <96906>	.NUT,SELF-LOCKING,HEXAGON....		HD		27	*	*	*		*	81	
					---*---											
P	F		1560-566-4289	S1630-62124 <78286>	.FITTING,FUEL CELL.....		EA		2	*	*	*		REF	81	71
					ATTACHING PARTS											
			5306-182-1964	AN4H16A <88044>	.BOLT,MACHINE.....		HD		4	*	*	*		*	81	72
			5310-184-9001	AN960PD416L <88044>	.WASHER,FLAT.....		HD		4	*	*	*		*	81	
					---*---											
P	F		1560-663-4465	S1630-62036 <78286>	.GASKET.....		EA		2	REF	REF	REF		REF	81	73
			4730-287-0285	AN818-12D <88044>	..NUT,TUBE COUPLING.....		EA		2	*	*	*		*	81	75
			4730-287-0067	MS20819-12D <96906>	..SLEEVE,FLARED TUBE FITTING.		EA		2	*	*	*		*	81	76
MF	F			S1630-62055-98 <78286>	..TUBE.....		EA		1						81	77
					MAKEFR											
					AR 4710-277-3627 TUBE											
					2 EA 4730-287-0285 NUT											
					2 EA 4730-287-0067 SLEEVE											
			5330-263-8033	MS29512-12 <96906>	.PACKING,PREFORMED.....		EA		2	*	*	*		*	81	79
P	O		2915-097-0319	83001-2 <75361>	.VALVE,DRAIN,HYDROCARBON.....		EA		1	REF	REF	REF		REF	81	80
P	O		1560-090-4484	MS26541-1 <96906>	.COCK-WATER DETECTOR RPLS--.		EA		1	*	REF	REF		REF	81	81
					1680-569-2570											
P	F		1560-544-0912	S1630-62226 <78286>	.ADAPTER,FUEL SYSTEM.....		EA		1	*	REF	REF		REF	81	82
P	O		1560-633-6979	S1630-62409 <78286>	.GASKET.....		EA		1	REF	REF	REF		REF	81	83

(1) SOURCE, MAINT AND REC CODE (a) SOURCE CODE	(b) MAINT LEVEL	(c) REC CODE	(2) FEDERAL STOCK NUMBER	REFERENCE NUMBER	(3) DESCRIPTION	MODELS USABLE ON CH-34C	(4) UNIT OF ISSUE	(5) QTY INC IN UNIT PACK	(6) QTY INC IN UNIT	(7) 30-DAY DS GS MAINT ALW (a) 1-20	(b) 21-50	(c) 51-100	(8) 1-YR ALW PER 100 EQUIP CNTGCY	(9) DEPOT MAINT ALW PER 100 EQUIP	(10) ILLUSTRATION (a) FIG NO	(b) ITEM NO
			4730-027-6595	MS21337-3 <96906>	.PLUG,PIPE.....		EA		1	*	*	*		*	81	84
P	F		1560-591-6673	S1630-62145 <78286>	.FITTING RPLS--..... 1560-413-3547		EA		1	*	REF	REF		REF	81	85
			5330-250-0230	MS29513-22 <96906>	.PACKING,PREFORMED.....		EA		1	*	REF	REF		*	81	86
P	O		4730-203-0721	S1630-62030 <78286>	.PLUG,MACHINE THREAD.....		EA		1	*	REF	REF		REF	81	87
			5330-263-8034	MS29512-16 <96906>	.PACKING,PREFORMED.....		EA		1	*	*	REF		*	81	88
P	O		1560-544-0911	S1630-62225 <78286>	.SPRING,FUEL SUMP STRAINER... COMPRESSION RPLS-- 1560-326-3474		EA		1	*	*	*		REF	81	89
P	O		1560-544-0909	S1630-62223 <78286>	.STRAINER ASSEMBLY,FUEL..... SUMP RPLS-- 1560-334-6357, 1560-505-8493		EA		1	*	REF	REF		REF	81	90
P	O		1560-522-8897	S1630-62131-2 <78286>	.HOUSING RPLS--..... 1560-327-3905 ATTACHING PARTS		EA		1	*	*	REF		REF	81	94
			5306-182-2017	AN4H6A <88044>	.BOLT,MACHINE.....		HD		2	*	*	*		*	81	95
			5310-184-9001	AN960PD416L <88044>	.WASHER,FLAT.....		HD		2	*	*	*		*	81	
			5310-543-4443	MS20364-428A <96906>	.NUT,SELF-LOCKING,HEXAGON....		HD		2	*	*	*		*	81	
					---*---											
			5330-263-8033	MS29512-12 <96906>	.PACKING,PREFORMED.....		EA		1	*	*	*		*	81	96
P	O		1560-550-6491	S1630-62064-1 <78286>	.GASKET.....		EA		1	REF	REF	REF		REF	81	97
			1560-795-1901	S1630-62227 <78286>	.ADAPTER,FUEL SUMP STRAINER..		EA								81	98
P	O		1560-550-6491	S1630-62064-1 <78286>	.GASKET.....		EA		1	REF	REF	REF		REF	81	99
P	F		1560-620-4121	S1630-62224-1 <78286>	.STAND,PIPE,FUEL SUMP..... STRAINER RPLS-- 1560-544-0910		EA		1	REF	REF	REF		REF	81	100
P	F	R	2915-202-5827	RG11250 <51663>	.PUMP ASSEMBLY,FUEL..... SEE FIG.81A FOR BREAKDOWN ATTACHING PARTS		EA		1	REF	REF	REF	REF	REF	81	101
			5306-182-2017	AN4H6A <88044>	.BOLT,MACHINE.....		HD		12	*	*	*		*	81	102
			5310-184-9001	AN960PD416L <88044>	.WASHER,FLAT.....		HD		12	*	*	*		*	81	
			5310-543-4443	MS20364-428A <96906>	.NUT,SELF-LOCKING,HEXAGON....		HD		12	*	*	*		*	81	
					---*---											
P	F		2915-291-6328	RB11226 <51663>	.GASKET.....		EA		1	*	*	*	REF	REF	81	103
			1560-567-1104	S1630-62150-1 <78286>	.SUMP ASSEMBLY,CENTER AND.... AFT FUEL CELLS OBS-AFT- CMPL-W TM1-1H-34A-582		EA			*	*	*			81	
P	F		1560-340-0403	S1630-62150 <78286>	.SUMP STUDDING ASSEMBLY..... ATTACHING PARTS		EA		2	*	*	*		REF	81	104
			5306-182-2058	AN3H5A <88044>	.BOLT,MACHINE.....		EA		4	*	*	*		*	81	105
			5310-167-0753	AN960PD10L <88044>	.WASHER,FLAT.....		HD		8	*	*	*		*	81	
			5310-807-1467	MS21042-3 <96906>	.NUT,EXTENDED WASHER.....				4	*	*	*		*	81	
					---*---											
			5310-282-7834	MS24400D10 <96906>	.NUT,PLAIN,HEXAGON.....		EA		4	*	*	*		*	81	106
			5310-187-2405	AN960PD1416 <88044>	.WASHER,FLAT.....		EA		8	*	*	*		*	81	107
P	F		1560-626-7273	S1630-62143 <78286>	.FITTING ASSEMBLY RPLS--.... 1560-544-0935 1560-565-5614, 1560-575-2036,& 1560-575-2037 ATTACHING PARTS		EA		4	*	REF	REF		REF	81	108

(1) SOURCE, MAINT AND REC CODE (a) SOURCE CODE	(b) MAINT LEVEL	(c) REC CODE	(2) FEDERAL STOCK NUMBER	REFERENCE NUMBER		(3) DESCRIPTION	MODELS USABLE ON CH-34C	(4) UNIT OF ISSUE	(5) QTY INC IN UNIT PACK	(6) QTY INC IN UNIT	(7) 30-DAY DS GS MAINT ALW (a) 1-20	(b) 21-50	(c) 51-100	(8) 1-YR ALWPER 100 EQUIP CNTGCY	(9) DEPOT MANT ALWPER 100 EQUIP	(10) ILLUSTRATION (a) FIG NO	(b) ITEM NO
			5306-182-2017	AN4H6A	<88044>	.BOLT,MACHINE.....		HD		3	*	*	*		*	81	109
			5310-184-9001	AN960PD416L	<88044>	.WASHER,FLAT.....		HD		3	*	*	*		*	81	
			5310-543-4443	MS20364-428A	<96906>	.NUT,SELF-LOCKING,HEXAGON....		HD		3	*	*	*		*	81	
			5305-180-0010	AN525-10R8	<88044>	.SCREW,MACHINE.....		HD		2	*	*	*		*	81	110
			5310-183-4406	AN960PD10	<88044>	.WASHER,FLAT.....		HD		2	*	*	*		*	81	
						---*---											
P	F		5310-200-7749	RL24SB7	<83324>	..RING,LOCK,SERRATED.....		HD		2	*	*	*		REF	81	111
P	F		5340-597-3309	RD205SB7	<83324>	..INSERT,SCREW THREAD.....		EA		2	*	*	*		REF	81	112
P	F		5310-682-5877	RL28SB8	<83324>	..RING,LOCK,SERRATED.....		HD		3	*	*	*		REF	81	113
P	F		5340-200-4175	805735-00	<87991>	..INSERT,SCREW THREAD.....		EA		3	*	*	*		REF	81	114
				S1630-62016-2	<78286>	..BODY,FITTING.....		EA		1						81	115
			5306-182-1964	AN4H16A	<88044>	.BOLT,MACHINE.....		HD		12	*	*	*		*	81	116
			5310-184-9001	AN960PD416L	<88044>	.WASHER,FLAT.....		HD		12	*	*	*		*	81	
			5310-187-2354	AN960PD416	<88044>	.WASHER,FLAT.....		HD		12	*	*	*		*	81	
			5310-543-4443	MS20364-428A	<96906>	.NUT,SELF-LOCKING,HEXAGON....		HD		12	*	*	*		*	81	
P	F		1560-524-5118	S1630-62139	<78286>	.CONNECTOR RPLS--.....		EA		1	*	*	REF		REF	81	117
						4730-595-4505											
						ATTACHING PARTS											
			5306-182-1958	AN4H10A	<88044>	.BOLT,MACHINE.....		HD		6	*	*	*		*	81	118
			5310-184-9001	AN960PD416L	<88044>	.WASHER,FLAT.....		HD		6	*	*	*		*	81	
P	F		5330-580-5327	110 1-4	<86579>	.PACKING-WITH RETAINER.....		EA		6	*	*	*		REF	81	
			5310-543-4443	MS20364-428A	<96906>	.NUT,SELF-LOCKING,HEXAGON....		HD		6	*	*	*		*	81	
						---*---											
P	F		1560-657-2903	S1630-62147	<78286>	.FLANGE,FUEL CELL.....		EA		2	REF	REF	REF		REF	81	119
						INTERCONNECTING											
						ATTACHING PARTS											
			5306-292-8252	AN4H7A	<88044>	.BOLT,MACHINE.....		HD		12	*	*	*		*	81	120
			5310-184-9001	AN960PD416L	<88044>	.WASHER,FLAT.....		HD		12	*	*	*		*	81	
			5310-187-2354	AN960PD416	<88044>	.WASHER,FLAT.....		HD		12	*	*	*		*	81	
			5310-543-4443	MS20364-428A	<96906>	.NUT,SELF-LOCKING,HEXAGON....		HD		12	*	*	*		*	81	
						---*---											
P	F		1560-028-1018	2F1-4-18304	<01297>	.TANK,FUEL,AIRCRAFT.....		EA		1	*	*	2	10	*	81	124
						RH CODE A											
P	F		1560-332-6538	2F1-4-20993	<01297>	.TANK,FUEL,AIRCRAFT,PLIOCEL..		EA		1	*	*	2	7	*	81	
						FUEL-RH CODE C											
P	F		1560-575-2035	2F1-4-18305	<78286>	.CELL ASSEMBLY,PLIOCEL FUEL..		EA		1	*	*	2	10	*	81	125
						CENTER CODE A											
P	F		1560-332-6539	2F1-4-20994	<73842>	.TANK,FUEL,AIRCRAFT,PLIOCEL..		EA		1	*	*	2	7	*	81	
						FUEL CENTER CODE C											
P	F		1560-028-1020	2F1-4-18306	<01297>	.FUEL CELL ASSEMBLY-LH.....		EA		1	*	*	*	5	*	81	126
						CODE A											
P	F		1560-332-6540	2F1-4-20995	<01297>	.TANK,FUEL,AIRCRAFT,PLIOCEL..		EA		1	*	*	*	5	*	81	
						FUEL-LH CODE C											
						CODE A											
						USBL EFF 53-4475 THRU 55-4484											
						CODE C											
						USBL EFF 55-4485 & SUBSEQUENT											

(1) SOURCE, MAINT AND REC CODE (a) SOURCE CODE	(b) MAINT LEVEL	(c) REC LEVEL CODE	(2) FEDERAL STOCK NUMBER	REFERENCE NUMBER	(3) DESCRIPTION	MODELS USABLE ON CH-34C	(4) UNIT OF ISSUE	(5) QTY INC IN UNIT PACK	(6) QTY INC IN UNIT	(7) 30-DAY DS GS MAINT ALW (a) 1-20	(b) 21-50	(c) 51-100	(8) 1-YR ALW PER 100 EQUIP CNTGCY	(9) DEPOT MAINT ALW PER 100 EQUIP	(10) ILLUSTRATION (a) FIG NO	(b) ITEM NO
P	F	R	2915-202-5827	RG11250	<51663> PUMP,ROTARY,POWER DRIVEN..... SEE FIG.81 FOR NHA		EA		1	REF	REF	REF	REF	*	81A	
P	H		2915-335-7140	R11254	<51663> .COVER,MOTOR..... ATTACHING PARTS		EA		1	*	*	*		*	81A	1
				RA9684	<51663> .SCREW,MACHINE.....NOTE 1		EA		2						81A	2
P	H		5330-202-1521	RB8358-515-8	<51663> .PACKING WITH RETAINER.NOTE 2 ---*---		EA		2	*	*	*		*	81A	3
			4730-837-0856	MS24391D4L	<96906> .PLUG,MACHINE THREAD...NOTE 1		EA		1	*	*	*		*	81A	4
			5330-248-3836	MS29513-012	<96906> .PACKING,PREFORMED.....NOTE 2		EA		1	*	*	*		*	81A	5
P	H		2915-767-8380	RD11258	<51663> .COVER,SHROUD..... ATTACHING PARTS		EA		1	*	*	*		*	81A	6
			5305-145-6971	AN503-8-6	<88044> .SCREW,MACHINE.....NOTE 1		HD		3	*	*	*		*	81A	7
			5310-515-8058	AN960-8	<88044> .WASHER,FLAT.....NOTE 1 ---*---		HD		3	*	*	*		*	81A	8
				RA11249	<51663> .GASKET.....NOTE 1		EA		AR						81A	9
				RA11249-1	<51663> .SHIM.....NOTE 1		EA		AR						81A	
				RA11249-2	<51663> .SHIM.....NOTE 1		EA		AR						81A	
				RA11249-3	<51663> .SHIM.....NOTE 1		EA		AR						81A	
			5330-265-1084	MS29513-131	<96906> .PACKING,PREFORMED.....NOTE 2		EA		1	REF	REF	REF		*	81A	10
P	H		2915-510-8383	RA11248	<51663> .IMPELLER ASSEMBLY,FUEL..... PUMP ATTACHING PARTS		EA		1	*	*	2		*	81A	
			5310-807-1467	MS21042-3	<96906> .NUT,EXTENDED WASHER,HEXAGON. NOTE 1		HD		1	*	*	*		*	81A	11
			5310-167-0834	AN960-10L	<88044> .WASHER,FLAT.....NOTE 1 ---*---		HD		1	*	*	*		*	81A	12
X1				RA11247	<51663> ..SEAL,ROTATING.....		EA		1						81A	14
				RA11227	<51663> .KEY,MACHINE.....NOTE 1		EA		1						81A	15
				RA11253	<51663> .SHIM.....NOTE 1		EA		AR						81A	16
				RA11253-1	<51663> .SHIM.....NOTE 1		EA		AR						81A	
				RA11253-2	<51663> .SHIM.....NOTE 1		EA		AR						81A	
				RA11253-3	<51663> .SHIM.....NOTE 1		EA		AR						81A	
			5330-248-3833	MS29513-008	<96906> .PACKING,PREFORMED.....NOTE 2		EA		1	REF	REF	REF		*	81A	17
				RA11256	<51663> .SEAL,STATIONARY,PUMP..NOTE 1		EA		1						81A	18
				RA11234	<51663> .SPRING,HELICAL,COMPRESSION.. NOTE 1		EA		1						81A	19
				RA11071	<51663> .SPACER,RING.....NOTE 1		EA		1						81A	20
			5330-350-9013	MS29513-112	<96906> .PACKING,PREFORMED.....		EA		1	*	*	*		*	81A	21
P	H		6105-519-0866	DC2	<11976> .MOTOR ASSEMBLY SEE..... FIG.81A <SHEET 2 OF 2> FOR BREAKDOWN		EA		1	*	*	*		*	81A	22
				RA11257	<51663> .SLINGER,FUEL PUMP.....NOTE 1		EA		1						81A	23
			5330-291-7295	MS29513-136	<96906> .PACKING,PREFORMED.....NOTE 2		EA		1	*	*	*		*	81A	24
P	H		2915-335-5270	RB11252	<51663> .BODY ASSEMBLY.....		EA		1	*	*	*		*	81A	
X1				RR11244	<51663> ..HOUSING.....		EA		1						81A	25
				RB11226	<51663> .GASKET.....NOTE 2		EA		1						81A	26
				RA11288-1	<51663> .SCREEN,INLET.....NOTE 1 ATTACHING PARTS		EA		1						81A	27
			5305-543-2023	MS35265-25	<96906> .SCREW,MACHINE.....		GR		2	*	*	*		*	81A	28
			5310-167-0816	AN960-6	<88044> .WASHER,FLAT.....		HD		2	*	*	*		*	81A	29
			9525-803-3044	AN99NC32	<88044> .WIRE,NICKLE-COPPER ALLOY.... ---*---		SL		AR	*	*	*		*	81A	

(1) SOURCE, MAINT AND REC CODE (a) SOURCE CODE	(b) MAINT LEVEL	(c) REC CODE	(2) FEDERAL STOCK NUMBER	REFERENCE NUMBER	(3) DESCRIPTION	MODELS USABLE ON CH-34C	(4) UNIT OF ISSUE	(5) QTY INC IN UNIT PACK	(6) QTY INC IN UNIT	(7) 30-DAY DS/GS MAINT ALW (a) 1-20	(b) 21-50	(c) 51-400	(8) 1-YR ALW PER 100 EQUIP CNTGCY	(9) DEPOT MAINT ALW PER 100 EQUIP	(10) ILLUSTRATION (a) FIG NO	(b) ITEM NO
				5000-50SMF <79136>	.RING,RETAINING.....NOTE 1		EA		1						81A	30
				RA11231 <51663>	.WASHER.....NOTE 1		EA		1						81A	31
				RA11229 <51663>	.GROMMET.....NOTE 2		EA		1						81A	32
P	H		2915-205-1765	RA11259 <51663>	.PLATE,IDENTIFICATION.....		EA		1	*	*	*		*	81A	33
					ATTACHING PARTS											
			5305-253-5603	MS21318-1 <96906>	.SCREW,DRIVE.....		HD		2	*	*	*		*	81A	34
					---*---											
P	H		6105-519-0866	DC2 <11976>	.MOTOR ASSEMBLY.....		EA		1	*	*	*		*	81A	
				US76357 <11976>	..BRUSH.....NOTE 1		EA		1						81A	35
					ATTACHING PARTS											
			5305-282-9940	AN508-6-4 <88044>	..SCREW,MACHINE.....NOTE 1				1						81A	36
			5310-045-4007	MS35338-41 <96906>	..WASHER,LOCK.....		HD		1	*	*	*		*	81A	37
					---*---											
				US68096 <11976>	..PIN,COTTER.....NOTE 1		HD		1						81A	38
				AS89734 <90299>	..SPRING,SPIRAL,TORSION..... NOTE 1		EA		1						81A	39
P	H		5977-767-8376	AS89572 <11976>	..HOLDER,BRUSH.....		EA		1	*	*	*		*	81A	40
					ATTACHING PARTS											
			5305-151-2297	AN507-440R4 <88044>	..SCREW,MACHINE.....NOTE 1		HD		2	*	*	*		*	81A	41
					---*---											
				US76357 <11976>	..BRUSH.....NOTE 1		EA		1						81A	42
P	H		5977-980-1924	AS89748 <11976>	..INSULATED BRUSH HOLDER..... ASSEMBLY		EA		1	*	*	*		*	81A	
					ATTACHING PARTS											
			5305-984-4988	MS35206-228 <96906>	..SCREW,MACHINE.....NOTE 1		HD		2	*	*	*		*	81A	43
				US67892 <90299>	..WASHER.....NOTE 1		EA		4						81A	44
					---*---											
			5305-059-8248	MS35214-23 <96906>	...SCREW,MACHINE.....NOTE 1				1	*	*	*		*	81A	45
			5310-045-4007	MS35338-41 <96906>	...WASHER,LOCK.....		HD		1	*	*	*		*	81A	46
				US68096 <11976>	...PIN,COTTER.....NOTE 1		HD		1						81A	47
				AS89734 <11976>	...SPRING,SPIRAL,TORSION..... NOTE 1		EA		1						81A	48
P	H		5977-980-1925	AS89733 <11976>	...HOLDER BRUSH.....		EA		1	*	*	*		*	81A	49
P	H		5970-994-3292	US40388 <90299>	...INSULATOR,BRUSH TOP.NOTE 1		EA		2	*	*	*		*	81A	50
				AS89747 <90299>	...INSULATOR,BRUSH BOTTOM.... NOTE 1		EA		2						81A	51
			5320-956-5737	MS16535-54 <96906>	...RIVET,TUBULAR.....		EA		2	*	*	*		*	81A	52
P	H		6105-536-0862	US40387 <90299>	...BASE,BRUSH HOLDER...NOTE 1		EA		1	*	*	*		*	81A	53
P	H		5305-083-2051	AS89548 <90299>	..SCREW,SELF-LOCKING.....		EA		1	*	*	*		*	81A	54
P	H		6105-511-0289	AS89543 <90299>	..ARMATURE ASSEMBLY.....		EA		1	*	*	*		*	81A	55
				38KDDLT <21335>	..BEARING,BALL.....NOTE 1		EA		1						81A	56
				AS89547 <11976>	..SPACER,BEARING.....NOTE 1		EA		1						81A	57
				36KDDLT <21335>	..BEARING,BALL.....NOTE 1		EA		1						81A	58
P	H		6105-767-8373	AS89536 <90299>	..END BELL,ELECTRICAL..... ROTATING		EA		1	*	*	*		*	81A	59
					ATTACHING PARTS											
				AS89546 <90299>	..SCREW.....NOTE 1		EA		2						81A	60
				AS89549 <90299>	..WASHER,TAB.....NOTE 1		EA		2						81A	61
					---*---											
P	H		6105-767-8375	AS89538 <90299>	..STATOR,MOTOR.....		EA		1	*	*	*		*	81A	62
				AS80359 <90299>	...TERMINAL.....NOTE 1		EA		1						81A	63
				AS88228 <90299>	...TERMINAL.....NOTE 1		EA		1						81A	64

(1) SOURCE, MAINT AND REC CODE (a) SOURCE CODE	(b) MAINT LEVEL	(c) REC CODE	(2) FEDERAL STOCK NUMBER	REFERENCE NUMBER		(3) DESCRIPTION	MODELS USABLE ON CH-34C	(4) UNIT OF ISSUE	(5) QTY INC IN UNIT PACK	(5) QTY INC IN UNIT	(7) 30-DAY DS GS MAINT ALW (a) 1-20	(b) 21-50	(c) 51-100	(8) 1-YR ALW PER 100 EQUIP CNTGCY	(9) DEPOT MAINT ALW PER 100 EQUIP	(10) ILLUSTRATION (a) FIG NO	(b) ITEM NO
				AS91321	<90299>	...TUBING.....NOTE 1		EA		1						81A	65
				AS92226	<90299>	...TUBING.....NOTE 1		EA		1						81A	66
P	H		5995-980-1927	AS89654	<51663>	...WIRE LEAD GROUND.....		EA		1	*	*	*		*	81A	67
X1				AS89541	<90299>	...COIL ASSEMBLY.....		EA		1						81A	69
X1				AS89540	<90299>	...COIL ASSEMBLY.....		EA		1						81A	70
X1				AS89539	<90299>	...BODY.....		EA		1						81A	71
P	H		6105-980-1928	AS89537	<51663>	...SLEEVE,STATOR.....		EA		1	*	*	*		*	81A	72
P	H		2915-970-1779	RA22175	<51663>	PARTS KIT,PUMP U/O..... 2915-202-5827 SEE FUNCTIONAL GROUP 50 FOR COMPONENTS		EA		1	2	2	3	36	*	81A	
P	H		2915-446-4770	RA22176B	<51663>	PARTS KIT,FUEL PUMP U/O..... 2915-202-5827 SEE FUNCTIONAL GROUP 50 FOR COMPONENTS NOTE 1 COMPONENT OF KIT 2915-970-1779 NOTE 2 COMPONENT OF KIT 2915-446-4770		EA		1	*	*	*		*	81A	
				S1635-61230-5	<78286>	FORWARD TRANSMISSION..... INSTALLATION SEE FIG.40 FOR NHA		EA								82	
AF	F			S1635-61229-3	<78286>	.SHAFT ASSEMBLY..... ATTACHING PARTS		EA		1						82	1
			5306-182-1959	AN4H11A	<88044>	.BOLT,MACHINE.....		HD		8	*	*	*		*	82	2
			5310-194-0637	MS9320-10	<96906>	.WASHER,THRUST.....		EA		16	*	*	*		*	82	
			5310-877-5796	MS21044N4	<96906>	.NUT,SELF-LOCKING,HEXAGON....		EA		8	*	*	*		*	82	
			5306-292-8252	AN4H7A	<88044>	.BOLT,MACHINE.....		HD		8	*	*	*		*	82	3
			5310-194-0637	MS9320-10	<96906>	.WASHER,THRUST.....		EA		16	*	*	*		*	82	
			5310-543-4443	MS20364-428A	<96906>	.NUT,SELF-LOCKING,HEXAGON.... ---*---		HD		8	*	*	*		*	82	
			1560-326-3492	S1635-61202-1	<78286>	..COUPLING ASSEMBLY RPL-BY.. 1560-571-6227										82	
P	F		1560-571-6227	S1635-61202-2	<78286>	..RUBBER COUPLING ASSEMBLY... RPLS--1560-326-3492, OBSLTS 1560-310-1415 ATTACHING PARTS		EA		1	7	18	35		*	82	4
			5306-182-2017	AN4H6A	<88044>	..BOLT,MACHINE.....		HD		8	*	*	*		*	82	5
			5310-194-0637	MS9320-10	<96906>	..WASHER,THRUST.....		EA		8	*	*	*		*	82	
			5310-543-4443	MS20364-428A	<96906>	..NUT,SELF-LOCKING,HEXAGON... ---*---		HD		8	*	*	*		*	82	
P	F		1560-571-6227	S1635-61202-2	<78286>	..RUBBER COUPLING ASSEMBLY... RPLS--1560-326-3492, OBSLTS 1560-310-1415		EA		1	REF	REF	REF		REF	82	6

(1) SOURCE, MAINT AND REC CODE (a) SOURCE CODE	(b) MAINT LEVEL	(c) REC CODE	(2) FEDERAL STOCK NUMBER	REFERENCE NUMBER	(3) DESCRIPTION	MODELS USABLE ON CH-34C	(4) UNIT OF ISSUE	(5) QTY INC IN UNIT PACK	(6) QTY INC IN UNIT	(7) 30-DAY DS GS MAINT ALW (a) 1-20	(b) 21-50	(c) 51-100	(8) 1-YR ALW PER 100 EQUIP CNTGCY	(9) DEPOT MAINT ALW PER 100 EQUIP	(10) ILLUSTRATION (a) FIG NO	(b) ITEM NO
					CONTINUED										82	6
					ATTACHING PARTS											
			5306-182-1959	AN4H11A <88044>	..BOLT,MACHINE.....		HD		8	*	*	*		*	82	7
			5310-194-0637	MS9320-10 <96906>	..WASHER,THRUST.....		EA		16	*	*	*		*	82	
			5310-141-1795	AN960-416 <88044>	..WASHER,FLAT.....		HD		8	*	*	*		*	82	
			5310-543-4443	MS20364-428A <96906>	..NUT,SELF-LOCKING,HEXAGON...		HD		8	*	*	*		*	82	
					---*---											
P	F		1615-326-3494	S1635-64312-1 <78286>	..SPACER,PLATE.....		EA		3	2	2	4		*	82	8
P	F		1615-334-6364	S1635-64312-2 <78286>	..SPACER,PLATE.....		EA		3	2	2	5		*	82	
P	F		1615-326-3495	S1635-64312-3 <78286>	..SPACER,PLATE.....		EA		3	2	4	8		*	82	
			1615-697-8475	S1635-64312-4 <78286>	..SHIM RPL-BY.....										82	
					1560-620-4506											
P	F		1615-620-4506	S1635-64312-5 <78286>	..SHIM,PYLON TAIL DRIVE.....		EA		3	2	3	5		*	82	
					COUPLING RPLS--											
					1560-697-8475											
			1615-310-1418	S1635-63350 <78286>	..COUPLING HALF,SHAFT.....		EA			2	4	7			82	
					RPL-BY 1615-034-6179											
			1615-310-1419	S1635-63354 <78286>	..COUPLING HALF,SHAFT.....										82	
					RPL-BY 1615-034-6179											
			1615-522-8896	S1635-63350-2 <78286>	..COUPLING HALF,SHAFT.....										82	
					RPL-BY 1615-034-6179											
P	F		1615-034-6179	S1635-63350-4 <78286>	..COUPLING HALF,SHAFT.....		EA		1	2	4	7		*	82	9
					RPLS-- 1615-310-1418,											
					1615-310-1419,&											
					1615-522-8896											
					ATTACHING PARTS											
			5306-180-2721	AN5H26 <88044>	..BOLT,MACHINE.....		EA		2	*	*	*		*	82	10
P	F		5310-596-9485	S1635-63353 <78286>	..WASHER,FLAT.....		EA		4	*	*	*		*	82	11
			5310-088-0553	MS21044N5 <96906>	..NUT,SELF-LOCKING,HEXAGON...		HD		2	*	*	*		*	82	12
					---*---											
P	F		1560-308-3534	S1635-63352 <78286>	..WEDGE,TAIL ROTOR DRIVE.....		EA		8	6	16	31		*	82	13
					SHAFT											
P	F		1560-307-3651	S1635-63351 <78286>	..BUSHING,SLEEVE.....		EA		4	2	3	6		*	82	14
			1560-307-3676	S1635-64311 <78286>	..SHAFT,TAIL ROTOR DRIVE.....										82	
					RPL-BY 1560-991-0387											
P	F		1560-991-0387	S1635-64311-1 <78286>	..SHAFT,TRANSMISSION.....		EA		1	2	2	4		*	82	15
					INSTALLATION,FORWARD											
					RPLS-- 1560-307-3676,											
					1560-575-6412,&											
					1560-699-4376											
P	F		6150-642-1267	CF4F <79550>	..LEAD,ELECTRICAL.....		EA		1	*	*	*		*	82	16
P	F		1615-326-3494	S1635-64312-1 <78286>	.SPACER,PLATE.....		EA		3	REF	REF	REF		REF	82	17
P	F		1615-334-6364	S1635-64312-2 <78286>	.SPACER,PLATE.....		EA		3	REF	REF	REF		REF	82	
					PYLON											
P	F		1615-326-3495	S1635-64312-3 <78286>	.SHIM,TAIL ROTOR COUPLING....		EA		3	REF	REF	REF		REF	82	
					PYLON											
			1615-697-8475	S1635-64312-4 <78286>	.SHIM RPL-BY.....										82	
					1560-620-4506											
P	F		1615-620-4506	S1635-64312-5 <78286>	.SHIM,PYLON TAIL DRIVE.....		EA		3	REF	REF	REF		REF	82	
					COUPLING RPLS--											
					1560-697-8475											
			1560-336-1142	S1635-61100 <78286>	.OIL COOLER AND ROTOR BRAKE..		EA		1	*	*	*			82	20

(1) SOURCE, MAINT AND REC CODE (a) SOURCE CODE	(b) MAINT LEVEL	(c) REC CODE	(2) FEDERAL STOCK NUMBER	REFERENCE NUMBER	(3) DESCRIPTION	MODELS USABLE ON CH-34C	(4) UNIT OF ISSUE	(5) QTY INC IN UNIT PACK	(6) QTY NC IN UNIT	(7) 30-DAY DS GS MAINT ALW (a) 1-20	(b) 21-50	(c) 51-100	(8) 1-YR ALW PER 100 EQUIP CNTGCY	(9) DEPOT MAINT ALW PER 100 EQUIP	(10) ILLUSTRATION (a) FIG NO	(b) ITEM NO
					CONTINUED										82	20
					INSTALLATION USBL EFF											
					53-4475 THRU 54-891 SEE											
					FIG.83 FOR BREAKDOWN											
				S1635-61120-5 <78286>	.OIL COOLER AND BLOWER.....				1						82	
					INSTALLATION USBL EFF											
					54-892 & SUBSEQUENT SEE											
					FIG.84 FOR BREAKDOWN											
			5306-182-1962	AN4H14A <88044>	.BOLT,MACHINE.....		HD		4	*	*	*		*	82	21
			5310-194-0637	MS9320-10 <96906>	.WASHER,THRUST.....		EA		8	*	*	*		*	82	
			5310-877-5796	MS21044N4 <96906>	.NUT,SELF-LOCKING,HEXAGON....		EA		4	*	*	*		*	82	
			5306-182-1960	AN4H12A <88044>	.BOLT,MACHINE.....		HD		8	*	*	*		*	82	22
			5310-194-0637	MS9320-10 <96906>	.WASHER,THRUST.....		EA		16	*	*	*		*	82	
			5310-141-1795	AN960-416 <88044>	.WASHER,FLAT.....		HD		8	*	*	*		*	82	
			5310-543-4443	MS20364-428A <96906>	.NUT,SELF-LOCKING,HEXAGON....		HD		8	*	*	*		*	82	
AF	F			S1635-61228-3 <78286>	.BRAKE PULLEY AND HOUSING....		EA		1						82	23
					ASSEMBLY											
			5306-180-2750	AN5H11 <88044>	..BOLT,MACHINE.....		HD		6	*	*	*		*	82	24
			5310-194-0636	MS9320-11 <96906>	..WASHER,THRUST.....		EA		12	*	*	*		*	82	
			5310-088-0553	MS21044N5 <96906>	..NUT,SELF-LOCKING,HEXAGON...		HD		6	*	*	*		*	82	
P	F		1560-699-4374	S1635-61220 <78286>	..HUB,FLANGED BRAKE,TAIL.....		EA		1	*	2	2		*	82	25
					ROTOR DRIVE SHAFT											
					ATTACHING PARTS											
			5306-180-2721	AN5H26 <88044>	..BOLT,MACHINE.....		EA		2	*	*	*		*	82	26
P	F		5310-596-9485	S1635-63353 <78286>	..WASHER,FLAT.....		EA		4	*	*	*		REF	82	27
			5310-088-0553	MS21044N5 <96906>	..NUT,SELF-LOCKING,HEXAGON...		HD		2	*	*	*		*	82	28
					---*---											
AF	F			PD1105 <93561>	.BRAKE,ROTOR ASSEMBLY.....		EA		1						82	
P	F		1560-308-3534	S1635-63352 <78286>	..WEDGE,TAIL ROTOR DRIVE.....		EA		4	REF	REF	REF		REF	82	29
					SHAFT											
P	F		1560-307-3651	S1635-63351 <78286>	..BUSHING,SLEEVE.....		EA		2	REF	REF	REF		REF	82	30
			1630-315-4825	9430117 <81039>	..DISK,BRAKE RPL-BY.....										82	
					1630-573-6563											
P	F		1630-573-6563	9430246 <01297>	..DISK,BRAKE RPLS--.....		EA		1	*	2	2	19	*	82	31
					1630-315-4825											
		R	1630-028-0846	9430118 <73842>	..BRAKE ASSEMBLY,HYDRAULIC...										82	
					UNIT RPL-BY											
					1630-624-3430											
					SEE FIG.84B FOR BREAKDOWN											
P	O	R	1630-624-3430	9430267 <73842>	..BRAKE ASSEMBLY,HYDRAULIC...		EA		1	2	2	4	43	*	82	32
					UNIT RPLS--											
					1630-028-0846											
					SEE FIG.84A FOR BREAKDOWN											
			5306-182-2062	AN3H11A <88044>	..BOLT,MACHINE.....		HD		6	*	*	*		*	82	33
			5310-188-3744	MS9320-09 <96906>	..WASHER,THRUST.....		EA		12	*	*	*		*	82	
			5310-877-5797	MS21044N3 <96906>	..NUT,SELF-LOCKING,HEXAGON...		EA		6	*	*	*		*	82	
P	F		1615-305-4156	S1635-61219 <78286>	..HUB,TAIL ROTOR DRIVE.....		EA		1	*	*	2		*	82	34
					SHAFT FLANGED PULLEY											
					ATTACHING PARTS											
			5306-180-2721	AN5H26 <88044>	..BOLT,MACHINE.....		EA		2	*	*	*		*	82	35
P	F		5310-596-9485	S1635-63353 <78286>	..WASHER,FLAT.....		EA		4	*	*	*		REF	82	36
			5310-088-0553	MS21044N5 <96906>	..NUT,SELF-LOCKING,HEXAGON...		HD		2	*	*	*		*	82	37

(1) SOURCE, MAINT AND REC CODE (a) SOURCE CODE	(b) MAINT LEVEL	(c) REC CODE	(2) FEDERAL STOCK NUMBER	REFERENCE NUMBER		(3) DESCRIPTION	MODELS USABLE ON CH-34C	(4) UNIT OF ISSUE	(5) QTY INC IN UNIT PACK	(6) QTY INC IN UNIT	(7) 30-DAY DS GS MAINT ALW (a) 1-20	(b) 21-50	(c) 51-100	(8) 1-YR ALW PER 100 EQUIP CNTGCY	(9) DEPOT MAINT ALW PER 100 EQUIP	(10) ILLUSTRATION (a) FIG NO	(b) ITEM NO
						CONTINUED										82	37
						---*---											
P	F		1560-308-3534	S1635-63352	<78286>	..WEDGE,TAIL ROTOR DRIVE..... SHAFT		EA		4	REF	REF	REF		REF	82	38
P	F		1560-307-3651	S1635-63351	<78286>	..BUSHING,SLEEVE.....		EA		2	REF	REF	REF		REF	82	39
P	F		1615-567-1113	S1635-61133	<78286>	..GASKET.....		EA		2	*	*	2		*	82	40
P	F		1680-640-4944	S1635-61132	<78286>	..PULLEY,GROOVE.....		EA		1	2	2	3		*	82	41
P	F		5340-664-1756	S1635-61210	<78286>	..RING,RETAINING.....		EA		2	*	*	*		*	82	42
			3110-624-3622	SB1114-1	<78286>	..BEARING,BALL,ANNULAR..... RPL-BY 3110-992-1065										82	
			3110-626-9521	SB1114-2	<78286>	..BEARING,BALL,ANNULAR..... RPL-BY 3110-992-1065										82	
P	F		3110-992-1065	SB1114-4	<78286>	..BEARING,BALL,ANNULAR..... RPLS--3110-624-3622, 3110-626-9521		EA		1	*	*	*		*	82	43
P	F		5340-664-1756	S1635-61210	<78286>	..RING,RETAINING.....		EA		2	*	*	*		REF	82	44
			1560-560-5399	S1635-61232-1	<78286>	..HOUSING AND LINER..... ASSEMBLY,TAIL ROTOR DRIVE		EA								82	
P	F		1615-563-9944	S1635-61232	<78286>	..HOUSING AND LINER..... ASSEMBLY,TAIL ROTOR DRIVE SHAFT		EA		1	*	2	2		*	82	45
P	F		1560-062-9527	S1635-61221-1	<78286>	..SHAFT ASSEMBLY,TAIL DRIVE.. RPLS-- 1560-563-9942		EA		1	*	2	2		*	82	46
P	F		1615-326-3494	S1635-64312-1	<78286>	.SPACER,PLATE.....		EA		3	REF	REF	REF		REF	82	47
P	F		1615-334-6364	S1635-64312-2	<78286>	.SPACER,PLATE.....		EA		3	REF	REF	REF		REF	82	
P	F		1615-326-3495	S1635-64312-3	<78286>	.SPACER,PLATE.....		EA		3	REF	REF	REF		REF	82	
			1615-697-8475	S1635-64312-4	<78286>	.SHIM RPL-BY..... 1560-620-4506										82	
P	F		1615-620-4506	S1635-64312-5	<78286>	.SHIM,PYLON TAIL DRIVE..... COUPLING RPLS-- 1560-697-8475		EA		3	REF	REF	REF		REF	82	
P	F		1615-551-7054	S1635-61226	<78286>	.SHIM.....		EA		AR	*	2	2		*	82	48
P	F		1560-571-6227	S1635-61202-2	<78286>	.RUBBER COUPLING ASSEMBLY.... RPLS-- 1560-326-3492, OBSLTS 1560-310-1415 ATTACHING PARTS		EA		1	REF	REF	REF		REF	82	49
			5306-292-8252	AN4H7A	<88044>	.BOLT,MACHINE.....		HD		8	*	*	*		*	82	50
			5310-194-0637	MS9320-10	<96906>	.WASHER,THRUST.....		EA		24	*	*	*		*	82	
			5310-543-4443	MS20364-428A	<96906>	.NUT,SELF-LOCKING,HEXAGON....		HD		8	*	*	*		*	82	
						---*---											
P	F		1615-034-6179	S1635-63350-4	<78286>	.COUPLING HALF,SHAFT..... RPLS-- 1615-310-1418, 1615-310-1419,& 1615-522-8896 ATTACHING PARTS		EA		1	REF	REF	REF		REF	82	51
			5306-180-2721	AN5H26	<88044>	.BOLT,MACHINE.....		EA		2	*	*	*		*	82	52
P	F		5310-596-9485	S1635-63353	<78286>	.WASHER,FLAT.....		EA		4	*	*	*		REF	82	53
			5310-088-0553	MS21044N5	<96906>	.NUT,SELF-LOCKING,HEXAGON....		HD		2	*	*	*		*	82	54
						---*---											
P	F		1560-308-3534	S1635-63352	<78286>	.WEDGE,TAIL ROTOR DRIVE SHAFT		EA		4	REF	REF	REF		REF	82	55
P	F		1560-307-3651	S1635-63351	<78286>	.BUSHING,SLEEVE.....		EA		2	REF	REF	REF		REF	82	56
			5306-182-2016	AN4H5A	<88044>	.BOLT,MACHINE.....		HD		2	*	*	*		*	82	57

(1) SOURCE, MAINT AND REC CODE (a) SOURCE CODE	(b) MAINT LEVEL	(c) REC LEVEL	(2) FEDERAL STOCK NUMBER	REFERENCE NUMBER	(3) DESCRIPTION	MODELS USABLE ON CH-34C	(4) UNIT OF ISSUE	(5) QTY INC IN UNIT PACK	(6) QTY INC IN UNIT	(7) 30-DAY DS/GS MAINT ALW (a) 1-20	(b) 21-50	(c) 51-100	(8) 1-YR ALW PER 100 EQUIP CNTGCY	(9) DEPOT MAINT ALW PER 100 EQUIP	(10) ILLUSTRATION (a) FIG NO	(b) ITEM NO
			5310-194-0637	MS9320-10	<96906> .WASHER,THRUST.....		EA		4	*	*	*		*	82	
			5310-543-4443	MS20364-428A	<96906> .NUT,SELF-LOCKING,HEXAGON....		HD		2	*	*	*		*	82	
			5306-182-1964	AN4H16A	<88044> .BOLT,MACHINE.....		HD		4	*	*	*		*	82	58
			5310-194-0637	MS9320-10	<96906> .WASHER,THRUST.....		EA		8	*	*	*		*	82	
			5310-141-1795	AN960-416	<88044> .WASHER,FLAT.....		HD		8	*	*	*		*	82	
			5310-543-4443	MS20364-428A	<96906> .NUT,SELF-LOCKING,HEXAGON....		HD		4	*	*	*		*	82	
P	F		1560-633-6127	S1620-61189-10	<78286> .BEARING,PLATE ASSEMBLY.....		EA		1	*	*	*		*	82	59
P	F		1560-633-6950	S1620-61189-8	<78286> .BEARING,SUPPORT,FUSELAGE....		EA		1	*	*	REF		REF	82	60
					ATTACHING PARTS											
			5305-068-0485	MS35219-65	<96906> .SCREW,MACHINE.....		EA		6	*	*	*		*	82	61
			5310-167-0753	AN960PD10L	<88044> .WASHER,FLAT.....		HD		12	*	*	*		*	82	
			5310-877-5798	MS21044D3	<96906> .NUT,SELF-LOCKING,HEXAGON....		EA		6	*	*	*		*	82	
					---*---											
P	F		1560-301-3561	S1635-61205	<78286> .RING,HALF,TAIL ROTOR DRIVE..		EA		1	4	9	18		*	82	62
					SHAFT											
			1560-301-3561	1560H34-091-3	<81996> ADDED PART NO.FOR ABOVE ITEM.		EA			REF	REF	REF			82	62
			5306-283-0560	NAS464-4A4	<80205> .BOLT,SHEAR.....		EA		2	*	*	*		*	82	63
			5310-194-0637	MS9320-10	<96906> .WASHER,THRUST.....		EA		4	*	*	*		*	82	
			5310-543-4443	MS20364-428A	<96906> .NUT,SELF-LOCKING,HEXAGON....		HD		2	*	*	*		*	82	
			5306-182-1964	AN4H16A	<88044> .BOLT,MACHINE.....		HD		4	*	*	*		*	82	64
			5310-194-0637	MS9320-10	<96906> .WASHER,THRUST.....		EA		8	*	*	*		*	82	
			5310-141-1795	AN960-416	<88044> .WASHER,FLAT.....		HD		8	*	*	*		*	82	
			5310-543-4443	MS20364-428A	<96906> .NUT,SELF-LOCKING,HEXAGON....		HD		4	*	*	*		*	82	
P	F		1615-626-8454	S1620-61189-4	<78286> .BEARING SUPPORT,DRIVE.....		EA		1	*	2	2		*	82	65
P	F		1560-301-3561	S1635-61205	<78286> .RING,HALF,TAIL ROTOR DRIVE..		EA		1	REF	REF	REF		REF	82	66
					SHAFT											
			5306-182-2016	AN4H5A	<88044> .BOLT,MACHINE.....		HD		2	*	*	*		*	82	67
			5310-194-0637	MS9320-10	<96906> .WASHER,THRUST.....		EA		4	*	*	*		*	82	
			5310-543-4443	MS20364-428A	<96906> .NUT,SELF-LOCKING,HEXAGON....		HD		2	*	*	*		*	82	
			5306-182-1964	AN4H16A	<88044> .BOLT,MACHINE.....		HD		4	*	*	*		*	82	68
			5310-194-0637	MS9320-10	<96906> .WASHER,THRUST.....		EA		8	*	*	*		*	82	
			5310-141-1795	AN960-416	<88044> .WASHER,FLAT.....		HD		8	*	*	*		*	82	
			5310-543-4443	MS20364-428A	<96906> .NUT,SELF-LOCKING,HEXAGON....		HD		4	*	*	*		*	82	
P	F		1615-626-8454	S1620-61189-4	<78286> .BEARING SUPPORT,DRIVE.....		EA		1	*	REF	REF		REF	82	69
P	F		1560-301-3561	S1635-61205	<78286> .RING,HALF,TAIL ROTOR DRIVE..		EA		1	REF	REF	REF		REF	82	70
					SHAFT											
			1615-563-9943	S1635-61227-1	<78286> .SHAFT ASSEMBLY,TAIL ROTOR...										82	
					DRIVE RPL-BY											
					1560-991-0383											
P	F		1615-991-0383	S1635-61227-5	<78286> .SHAFT ASSEMBLY RPLS--.....		EA		1	*	2	2		*	82	71
					1560-563-9943											
					ATTACHING PARTS											
			5306-182-1959	AN4H11A	<88044> .BOLT,MACHINE.....		HD		8	*	*	*		*	82	72
			5310-194-0637	MS9320-10	<96906> .WASHER,THRUST.....		EA		16	*	*	*		*	82	
			5310-141-1795	AN960-416	<88044> .WASHER,FLAT.....		HD		7	*	*	*		*	82	
			5310-543-4443	MS20364-428A	<96906> .NUT,SELF-LOCKING,HEXAGON....		HD		8	*	*	*		*	82	
					---*---											
			1560-310-1415	S1635-61202	<78286> ..COUPLING ASSEMBLY,TAIL.....				1						82	
					ROTOR											
					OBS-BY 1560-571-6267											
			1560-326-3492	S1635-61202-1	<78286> ..COUPLING ASSEMBLY,TAIL.....										82	
					ROTOR											

(1) SOURCE, MAINT AND REC CODE (a) SOURCE CODE	(b) MAINT LEVEL	(c) REC CODE	(2) FEDERAL STOCK NUMBER	REFERENCE NUMBER	(3) DESCRIPTION	MODELS USABLE ON CH-34C	(4) UNIT OF ISSUE	(5) QTY INC IN UNIT PACK	(6) QTY INC IN UNIT	(7) 30-DAY DS GS MAINT ALW (a) 1-20	(b) 21-50	(c) 51-100	(8) 1-YR ALW PER 00 EQUIP CNTGCY	(9) DEPOT MAINT ALW PER 100 EQUIP	(10) ILLUSTRATION (a) FIG NO	(b) ITEM NO
					CONTINUED										82	
					RPL-BY 1560-571-6227											
P	F		1560-571-6227	S1635-61202-2 <78286>	..RUBBER COUPLING ASSEMBLY...		EA		1	REF	REF	REF		REF	82	73
					RPLS-1560-326-3492,											
					OBSLTS 1560-310-1415											
					ATTACHING PARTS											
			5306-182-2017	AN4H6A <88044>	..BOLT,MACHINE.....		HD		8	*	*	*		*	82	74
			5310-194-0637	MS9320-10 <96906>	..WASHER,THRUST.....		EA		16	*	*	*		*	82	
			5310-543-4443	MS20364-428A <96906>	..NUT,SELF-LOCKING,HEXAGON...		HD		8	*	*	*		*	82	
					---*---											
P	F		1615-034-6179	S1635-63350-4 <78286>	..COUPLING HALF,SHAFT.....		EA		1	REF	REF	REF		REF	82	75
					RPLS-- 1615-310-1418,											
					1615-310-1419,&											
					1615-522-8896											
					ATTACHING PARTS											
			5306-180-2721	AN5H26 <88044>	..BOLT,MACHINE.....		EA		2	*	*	*		*	82	76
P	F		5310-596-9485	S1635-63353 <78286>	..WASHER,FLAT.....		EA		4	*	*	*		REF	82	77
			5310-088-0553	MS21044N5 <96906>	..NUT,SELF-LOCKING,HEXAGON...		HD		2	*	*	*		*	82	78
					---*---											
P	F		1560-308-3534	S1635-63352 <78286>	..WEDGE,TAIL ROTOR DRIVE.....		EA		4	REF	REF	REF		REF	82	79
					SHAFT											
P	F		1560-307-3651	S1635-63351 <78286>	..BUSHING,SLEEVE.....		EA		2	REF	REF	REF		REF	82	80
AF	F			S1635-61204-1 <78286>	..SUPPORT,BEARING,TAIL ROTOR.		EA		3						82	81
P	F		5340-664-1756	S1635-61210 <78286>	...RING,RETAINING.....		EA		1	*	*	*		REF	82	82
			3110-626-9521	SB1114-2 <78286>	...BEARING,BALL,ANNULAR.....		EA		1					REF	82	
					RPL-BY 3110-992-1065											
P	F		5340-664-1756	S1635-61210 <78286>	...RING,RETAINING.....		EA		1	*	*	*		REF	82	84
P	F		1560-346-1160	S1635-61206-2 <78286>	...HOUSING ASSEMBLY,SUPPORT..		EA		1	3	9	17		*	82	85
					BEAM RPLS--											
					1560-310-1416											
P	F		1560-301-3562	S1635-61208 <78286>	..BUSHING ASSEMBLY,TAIL.....		EA		3	2	2	4		*	82	
					ROTOR DRIVE SHAFT											
X1				S1635-61209 <78286>	...BUSHING,SLEEVE WHEN.....		EA		1						82	86
					EXHTD RQTN NHA											
					1560-301-3562											
			1560-699-4375	S1635-61222 <78286>	..SHAFT,TAIL ROTOR DRIVE.....										82	
					RPL-BY 1560-802-2698											
P	F		1560-802-2698	S1635-61222-1 <78286>	..SHAFT,TAIL ROTOR RPLS--...		EA		1	*	2	2		*	82	87
					1560-699-4375,											
					1680-310-1417											
P	F		1615-326-3494	S1635-64312-1 <78286>	.SPACER,PLATE.....		EA		3	REF	REF	REF		REF	82	89
P	F		1615-334-6364	S1635-64312-2 <78286>	.SPACER,PLATE.....		EA		3	REF	REF	REF		REF	82	
P	F		1615-326-3495	S1635-64312-3 <78286>	.SPACER,PLATE.....		EA		3	REF	REF	REF		REF	82	
			1615-697-8475	S1635-64312-4 <78286>	.SHIM RPL-BY.....										82	
					1560-620-4506											
P	F		1615-620-4506	S1635-64312-5 <78286>	.SHIM,PYLON TAIL DRIVE.....		EA		3	REF	REF	REF		REF	82	
					COUPLING RPLS--											
					1560-697-8475											

(1) SOURCE, MAINT AND REC CODE (a) SOURCE CODE	(b) MAINT LEVEL	(c) REC CODE	(2) FEDERAL STOCK NUMBER	REFERENCE NUMBER		(3) DESCRIPTION	MODELS USABLE ON CH-34C	(4) UNIT OF ISSUE	(5) QTY INC IN UNIT PACK	(6) QTY INC IN UNIT	(7) 30 DAY DS/GS MAINT ALW (a) 1-20	(b) 21-50	(c) 51-100	(8) 1-YR ALW PER 100 EQUIP CNTGCY	(9) DEPOT MAINT ALW PER 100 EQUIP	(10) ILLUSTRATION (a) FIG NO	(b) ITEM NO
			1560-336-1142	S1635-61100	<78286>	OIL COOLER AND ROTOR BRAKE... INSTALLATION USBL EFF 53-4475 THRU 54-891 SEE FIG.82 FOR NHA		EA			*	*	*			83	
MF	O			4720EG003-10-0350	<81996>	.HOSE ASSEMBLY,..... TETRAFLUOROETHYLENE MAKEFR AR 4720-857-1730 HOSE 2 EA 4730-017-8659 NIPPLE 2 EA 4730-967-9517 SOCKET 2 EA 4730-967-9525 SLEEVE 2 EA 5340-726-3009 DUST PLUG		EA		1						83	1
MF	O			4720EG003-10-0110	<81996>	.HOSE ASSEMBLY..... MAKEFR AR 4720-857-1730 HOSE 2 EA 4730-017-86 NIPPLE 2 EA 4730-967-9517 SOCKET 2 EA 4730-967-9525 SLEEVE 2 EA 5340-726-3009 DUST PLUG		EA		1						83	2
			4730-287-0540	AN816-10-12	<88044>	.ADAPTER,STRAIGHT.....		EA		1	*	*	*		*	83	3
AO	O			155-10	<00624>	.COUPLING ASSEMBLY,..... SELF-SEALING		EA		1						83	4
P	O		4730-554-7738	155S5-10D	<00624>	..COUPLING HALF,SELF-SEALING.		EA		4	2	2	4		*	83	
P	O		4730-640-1313	155S4-10D	<00624>	..COUPLING HALF,SELF-SEALING.		EA		1	*	*	*		*	83	
X1				150S1-10D	<00624>	..COUPLING HALF,SEALING.....		EA		1						83	
P	O		4730-541-0780	T150S1-10D	<00624>	..COUPLING HALF,SELF-SEALING.		EA		1	*	*	*		*	83	
MF	O			4720EG003-12-0310	<81996>	.HOSE ASSEMBLY..... MAKEFR AR 4720-857-1734 HOSE 2 EA 4730-017-8660 NIPPLE 2 EA 4730-967-9518 SOCKET 2 EA 4730-967-9526 SLEEVE 2 EA 5340-833-7039 DUST PLUG		EA		1						83	5
			4730-842-2199	MS24587-D12	<96906>	.ADAPTER,STRAIGHT,TUBE..... TO HOSE		EA		1	*	*	*		*	83	6
P	C		1560-654-8877	S1635-61100-1	<78286>	.HOSE ASSEMBLY,OIL COOLER....		EA		1	*	*	*		*	83	7
P	F		4730-591-0656	155-12D	<00624>	.COUPLING ASSEMBLY,..... SELF-SEALING		EA		1	*	*	*		*	83	8
X1				150S1-12	<00624>	.COUPLING HALF,SEALING.....		EA		1						83	
P	O		4730-394-2468	155S4-12D	<00624>	..COUPLING HALF,QUICK..... DISCONNECT		EA		1	*	*	*		*	83	
X1				155S5-12D	<00624>	..NUT,UNION.....		EA		1						83	
			4730-197-2919	MS24394D12	<96906>	.ELBOW,TUBE.....		EA		1	*	2	2		*	83	9
P	F		3030-528-3944	A38S	<24161>	.BELT,V,MATCHED SET.....		SE		3	*	*	*		*	83	10
			5306-174-4091	AN4DDH3A	<88044>	.BOLT,MACHINE.....		EA		6	*	*	*		*	83	11
AF	F			S1635-61101	<78286>	.COOLER ASSEMBLY,OIL.....		EA		1						83	
P	F		1560-076-9804	S1607-2281-1	<78286>	..ANGLE.....		EA		1	*	*	*		*	83	
P	F		1560-076-9802	S1607-2281-2	<78286>	..ANGLE.....		EA		1	*	*	*		*	83	
P	F		1560-076-9803	S1607-2281-3	<78286>	..CHANNEL.....		EA		1	*	*	*		*	83	
P	F		1560-076-9805	S1607-2281-4	<78286>	..CHANNEL.....		EA		1	*	*	*		*	83	
P	F	R	2935-141-9332	8521001	<27462>	..COOLER ASSEMBLY,..... TRANSMISSION OIL		EA		1	*	2	2	17	*	83	14

(1) SOURCE, MAINT AND REC CODE (a) SOURCE CODE	(b) MAINT LEVEL	(c) REC CODE	(2) FEDERAL STOCK NUMBER	REFERENCE NUMBER	(3) DESCRIPTION	MODELS USABLE ON CH-34C	(4) UNIT OF ISSUE	(5) QTY INC IN UNIT PACK	(6) QTY INC IN UNIT	(7) 30-DAY DS/GS MAINT ALW (a) 1-20	(b) 21-50	(c) 51-100	(8) 1-YR ALW PER 100 EQUIP CNTGCY	(9) DEPOT MAINT ALW PER 100 EQUIP	(10) ILLUSTRATION (a) FIG NO	(b) ITEM NO
					CONTINUED										83	14
					ATTACHING PARTS											
			5306-182-2015	AN4H4A <88044>	..BOLT,MACHINE.....		HD		10	*	*	*		*	83	15
					---*---											
			5306-282-0904	AN3H31A <88044>	..BOLT,MACHINE.....		EA		4	*	*	*		*	83	18
			5310-183-4406	AN960PD10 <88044>	..WASHER,FLAT.....		HD		8	*	*	*		*	83	
			5310-807-1467	MS21042-3 <96906>	..NUT,SELF-LOCKING,HEXAGON...				4	*	*	*		*	83	
MF	F			S1635-61113 <78286>	..PLATE,V BELT DRIVE.....		EA		1						83	19
					MAKEFR											
					AR 9535-167-2280 AL ALLY SH											
P	F		1560-528-1598	S1635-61111 <78286>	..PULLEY,GROOVED.....		EA		1	*	*	2		*	83	20
			5310-596-8061	AN364-1018 <88044>	..NUT.....		LL		1	*	*	*		*	83	21
			5310-187-2403	AN960PD1016 <88044>	..WASHER,FLAT.....		HD		1	*	*	*		*	83	22
X2	F		1560-568-7756	S1635-61112 <78286>	..FLANGE,V-BELT DRIVEN PULLEY		EA		1	*	*	*		*	83	23
P	D		5315-616-5514	MS35756-6 <96906>	..KEY,WOODRUFF.....		HD		1	*	*	*		*	83	24
X2	F		1560-339-9625	S1535-61145 <78286>	..SHIM,OIL COOLER.....		EA		1	*	*	*		*	83	25
P	F	R	4140-640-5784	X702-194A <32537>	..FAN VANE SEE FIG.83A FOR...		EA			*	2	2			83	
					BREAKDOWN											
P	F	R	4140-631-3411	080108-010-01 <77200>	..FAN,VANE.....		EA		1	2	2	3	31	*	83	26
					ATTACHING PARTS											
			5306-180-2750	AN5H11 <88044>	..BOLT,MACHINE.....		HD		4	*	*	*		*	83	27
			5310-187-2399	AN960PD516 <88044>	..WASHER,FLAT.....		HD		8	*	*	*		*	83	
			5310-088-0553	MS21044N5 <96906>	..NUT,SELF-LOCKING,HEXAGON...		HD		4	*	*	*		*	83	
					---*---											
				842826 <06840>	...BEARING,BALL,ANNULAR.....		EA		1						83	
P	F			205SZZ <38443>	...BEARING,BALL,ANNULAR.....		EA		1						83	
P	F		1560-658-2899	S1535-61126 <78286>	..PLATE,OIL COOLER AND BLOWER		EA		1	*	*	*		*	83	28
					ATTACHING PARTS											
			5310-187-2399	AN960PD516 <88044>	..WASHER,FLAT.....		HD		3	*	*	*		*	83	
			5310-088-0553	MS21044N5 <96906>	..NUT,SELF-LOCKING,HEXAGON...		HD		3	*	*	*		*	83	
					---*---											
X2	F			S1635-61109-1 <78286>	..BLOCK-TOP LH.....		EA		1						83	30
X2	F		1560-212-4751	S1635-61103 <78286>	..SUPPORT ASSEMBLY-FRONT.....		EA		1	*	*	*		*	83	33
P	O	R	1630-624-3430	9430267 <73842>	.BRAKE ASSEMBLY,HYDRAULIC....		EA		2	REF	REF	REF	REF	REF	83	34
					UNIT RPLS-- 1630-028-0846											
					SEE FIG.84A FOR BREAKDOWN											
P	O		1560-530-7304	S1635-61138 <78286>	.SHIM.....		EA		AR	7	19	37		*	83	35
		R		X702-194A <32537>	FAN ASSEMBLY,AXIVANE AIRCRAFT				REF						83A	
					SEE FIG.83 FOR NHA											
			3110-680-5671	MS172238 <96906>	.NUT,PLAIN ROUND.....		EA		1		*	*		*	83A	
			5310-660-2896	MS172203 <96906>	.WASHER,KEY.....		EA		1		*	*		*	83A	2
X2	F			MS20066-144 <96906>	.KEY,MACHINE.....		EA		1						83A	
P	F		1660-591-4265	A88913 <75477>	.INTAKE SECTION ASSEMBLY,FAN.		EA		1		*	*		*	83A	3
			5310-187-2354	AN960PD416 <88044>	.WASHER,FLAT.....		HD		1		*	*		*	83A	4
P	F			205SZZ01-06A006A75 <38443>	.BEARING,BALL,ANNULAR.....		EA		1						83A	5
P	F		1660-591-4266	88921 1655-011 <75477>	.FAN SHAFT.....		EA		1		*	*		*	83A	6

(1) SOURCE, MAINT AND REC CODE (a) SOURCE CODE	(b) MAINT LEVEL	(c) REC CODE	(2) FEDERAL STOCK NUMBER	REFERENCE NUMBER		(3) DESCRIPTION	MODELS USABLE ON CH-34C	(4) UNIT OF ISSUE	(5) QTY INC IN UNIT PACK	(6) QTY INC IN UNIT	(7) 30-DAY DS/GS MAINT ALW (a) 1-20	(b) 21-50	(c) 51-100	(8) 1-YR ALWPER 100 EQUIP CNTGCY	(9) DEPOT MAINT ALWPER 100 EQUIP	(10) ILLUSTRATION (a) FIG NO	(b) ITEM NO
				A88911	<75477>	.ROTOR ASSEMBLY.....		EA		1						83A	7
			5310-596-0379	84173	<32537>	.WASHER,FLAT.....		EA		1		*	*		*	83A	8
				202SZZ77	<38443>	.BEARING,BALL,ANNULAR.....		EA		AR						83A	9
						RPLS-- P/N842826											
P	F		1660-347-5520	85955	<75477>	.RETAINER,VANE,AXIAL.....		EA		1		*	*		*	83A	10
						ATTACHING PARTS											
			5305-145-7019	AN503-10-12	<88044>	.SCREW,MACHINE.....		HD		4		*	*		*	83A	11
						---*---											
P	F		1560-626-1934	A88912	<75477>	.CASING ASSEMBLY,FAN.....		EA		1		*	*		*	83A	12
			5305-253-5607	MS21318-8	<96906>	.SCREW,DRIVE.....		EA		1		*	*		*	83A	13
				S1635-61120-5	<78286>	OIL COOLER AND BLOWER.....										84	
						INSTALLATION USBL EFF											
						54-892 & SUBSEQUENT SEE											
						FIG.82 FOR NHA											
MF	O			4720EG003-10-0350	<81996>	.HOSE ASSEMBLY,.....		EA		1						84	1
						TETRAFLUOROETHYLENE											
						MAKEFR											
						AR 4720-857-1730 HOSE											
						2 EA 4730-017-8659 NIPPLE											
						2 EA 4730-967-9517 SOCKET											
						2 EA 4730-967-9525 SLEEVE											
						2 EA 5340-726-3009 DUST PLUG											
			5330-285-9842	MS28778-10	<96906>	.PACKING,PREFORMED.....		EA		2	REF	REF	REF	REF	*	84	2
P	F		4720-910-7518	EAB440-10-0130	<81996>	.HOSE ASSEMBLY,.....		EA		1	*	*	2		*	84	3
						TETRAFLUOROETHYLENE											
			4730-287-0540	AN816-10-12	<88044>	.ADAPTER.....		EA		1	*	*	*		*	84	4
AO	O			155-10	<00624>	.COUPLING ASSEMBLY,.....		EA		1						84	5
						SELF-SEALING											
						ATTACHING PARTS											
			5306-151-1960	AN23-8	<88044>	.BOLT,CLEVIS.....		EA		6	*	*	*		*	84	6
			5310-167-0753	AN960PD10L	<88044>	.WASHER,FLAT.....		HD		6	*	*	*		*	84	
			5310-807-1467	MS21042-3	<96906>	.NUT,SELF-LOCKING,HEXAGON....				6	*	*	*		*	84	
						---*---											
P	O		4730-554-7738	155S5-10D	<00624>	..COUPLING HALF,SELF-SEALING.		EA		4	REF	REF	REF		REF	84	
P	O		4730-640-1313	155S4-10D	<00624>	..COUPLING HALF,SELF-SEALING.		EA		1	*	*	*		REF	84	
			1560-445-6239	S1635-61120-1	<78286>	.HOSE ASSEMBLY RPL-BY.....										84	
						4720-780-2776											
MF	O			4720EG007-12-0280	<81996>	.HOSE ASSEMBLY,.....		EA		1						84	
						TETRAFLUOROETHYLENE											
						RPLS-- 1560-445-6239											
						NOTE 1											
MF	O			4720EG003-12-0270	<81996>	.HOSE ASSEMBLY.....NOTE 1		EA		1						84	7
			4720-822-4894	MS28741-12-0170	<96906>	.HOSE ASSEMBLY RPL-BY.....										84	
						4720-871-3466											
MF	O			4720EG003-12-0170	<81996>	.HOSE ASSEMBLY RPLS--.....		EA		1						84	8
						4720-822-4894											

(1) SOURCE, MAINT AND REC CODE (a) SOURCE CODE	(b) MAINT LEVEL	(c) REC CODE	(2) FEDERAL STOCK NUMBER	REFERENCE NUMBER	(3) DESCRIPTION	MODELS USABLE ON CH-34C	(4) UNIT OF ISSUE	(5) QTY INC IN UNIT PACK	(6) QTY INC IN UNIT	(7) 30-DAY DS GS MAINT ALW (a) 1-20	(b) 21-50	(c) 51-100	(8) 1-YR ALW PER 100 EQUIP CNTGCY	(9) DEPOT MAINT ALW PER 100 EQUIP	(10) ILLUSTRATION (a) FIG NO	(b) ITEM NO
					CONTINUED										84	8
					NOTE 1											
MF	O			4720EG003-12-0140	<81996> .HOSE ASSEMBLY,..... TETRAFLUOROETHYLENE		EA		1						84	
					NOTE 1											
			5310-282-7833	MS24400D12	<96906> .NUT,PLAIN,HEXAGON.....		EA		1	*	*	*		*	84	9
			5330-251-8839	MS28778-12	<96906> .PACKING,PREFORMED.....		EA		4	REF	REF	REF		*	84	
			4730-197-2919	MS24394D12	<96906> .ELBOW,TUBE.....		EA		1	*	REF	REF		*	84	
P	F		4730-591-0656	155-12D	<00624> .COUPLING ASSEMBLY,..... SELF-SEALING		EA		1	*	*	*		REF	84	10
X1				155S5-12D	<00624> ..COUPLING HALF,SELF-SELFING.		EA		1						84	
P	O		4730-394-2468	155S4-12D	<00624> ..COUPLING HALF,QUICK..... DISCONNECT		EA		1	*	*	*			84	
					ATTACHING PARTS											
			5306-151-1960	AN23-8	<88044> ..BOLT,CLEVIS.....		EA		6	*	*	*		*	84	11
			5310-167-0753	AN960PD10L	<88044> ..WASHER,FLAT.....		HD		6	*	*	*		*	84	
			5310-807-1467	MS21042-3	<96906> ..NUT,SELF-LOCKING,HEXAGON...				6	*	*	*		*	84	
					---*---											
			4730-287-1027	MS20822-12D	<96906> .ELBOW,PIPE TO TUBE.....		EA		1	*	*	*		*	84	12
P	O		1560-530-7304	S1635-61138	<78286> .SHIM.....		EA		AR	REF	REF	REF		REF	84	13
P	O	R	1630-624-3430	9430267	<73842> .BRAKE ASSEMBLY,HYDRAULIC.... UNIT RPLS-- 1630-028-0846 SEE FIG.84A FOR BREAKDOWN		EA		2	REF	REF	REF	REF	REF	84	14
P	F		3030-528-3944	A38S	<24161> .BELT,V,MATCHED SET.....		SE		2	*	*	*		REF	84	15
AF	F			S1635-61121-1	<78286> .OIL COOLER..... ATTACHING PARTS		EA		1						84	16
			5306-182-2014	AN4H3A	<88044> .BOLT,MACHINE.....		HD		4	*	*	*		*	84	17
			5310-187-2354	AN960PD416	<88044> .WASHER,FLAT.....		HD		4	*	*	*		*	84	
			5306-180-0140	AN6DD12A	<88044> .BOLT,MACHINE.....		EA		4	*	*	*		*	84	18
			5310-187-2400	AN960PD616	<88044> .WASHER,FLAT.....		HD		4	*	*	*		*	84	
			5310-167-0768	MS63040-6	<96906> .WASHER,FLAT.....		HD		4	*	*	*		*	84	
			5310-857-4957	MS21044D6	<96906> .NUT,SELF-LOCKING,HEXAGON....		EA		4	*	*	*		*	84	
					---*---											
P	F		1560-570-4886	S1635-61124	<78286> ..SUPPORT ASSEMBLY,OIL COOLER ATTACHING PARTS		EA		1	*	*	*		*	84	19
			5306-559-8134	AN3DDH5A	<88044> ..BOLT,MACHINE.....		EA		10	*	*	*		*	84	20
			5310-183-4406	AN960PD10	<88044> ..WASHER,FLAT.....		HD		10	*	*	*		*	84	
					---*---											
P	O	R	2935-294-1919	8523534	<24617> ..COOLER,LUBRICATING OIL..... ATTACHING PARTS		EA		1	*	*	*	5	*	84	21
P	O		6620-600-9595	8518329	<24617> ..THERMOSTAT,FLOW CONTROL....		EA		1	*	*	*		*	84	21A
			5306-559-8134	AN3DDH5A	<88044> ..BOLT,MACHINE.....		EA		10	*	*	*		*	84	22
			5310-183-4406	AN960PD10	<88044> ..WASHER,FLAT.....		HD		10	*	*	*		*	84	
					---*---											
				8523535	<27462> ...CORE AND TANK ASSEMBLY....		EA		1						84	
			5306-269-6986	AN103813	<88044> ...BOLT,MACHINE.....		EA		1	*	*	*		*	84	
			5310-141-1795	AN960-416	<88044> ...WASHER,FLAT.....		HD		1	*	*	*		*	84	
P	F		2935-318-5703	8504273	<27462> ...GASKET,VALVE.....		EA		1	*	*	2		*	84	
P	F		5306-514-8341	8517883	<27462> ...BOLT,MACHINE.....		EA		2	2	2	3		4	84	
P	H		2935-695-4159	8515665	<24617> ...BODY,OIL COOLER VALVE.....		EA		1	*	*	*		*	84	
P	F		1560-560-5398	S1635-61123	<78286> ..DUCT ASSEMBLY,TRANSMISSION. ATTACHING PARTS		EA		1	*	*	*		*	84	23

(1) SOURCE, MAINT AND REC CODE (a) SOURCE CODE	(b) MAINT LEVEL	(c) REC CODE	(2) FEDERAL STOCK NUMBER	(3) DESCRIPTION REFERENCE NUMBER			MODELS USABLE ON CH-34C	(4) UNIT OF ISSUE	(5) QTY INC IN UNIT PACK	(6) QTY INC IN UNIT	(7) 30-DAY DS GS MAINT ALW (a) 1-20	(b) 21-50	(c) 51-100	(8) 1-YR ALW PER 100 EQUIP CNTGCY	(9) DEPOT MAINT ALW PER 100 EQUIP	(10) ILLUSTRATION (a) FIG NO	(b) ITEM NO
			5306-208-9029	AN4DDH5A	<88044>	..BOLT,MACHINE.....		EA		8	*	*	*		*	84	24
			5310-187-2354	AN960PD416	<88044>	..WASHER,FLAT.....		HD		16	*	*	*		*	84	
			5310-877-5796	MS21044N4	<96906>	..NUT,SELF-LOCKING,HEXAGON...		EA		8	*	*	*		*	84	
						---*---											
P	F		1560-575-6410	S1635-61128	<78286>	..PULLEY ASSEMBLY,OIL COOLER.		EA		1	2	3	7		*	84	25
						ATTACHING PARTS											
			5310-285-5638	MS20364-820C	~~<96906>~~	..NUT,SELF-LOCKING,HEXAGON...		HD		1	*	*	*		*	84	26
			5310-167-0823	AN960-816	<88044>	..WASHER,FLAT.....		HD		1	*	*	*		*	84	27
			5310-167-0825	AN960-1016	<88044>	..WASHER,FLAT.....		HD		4	*	*	*		*	84	28
P	D		5315-616-5514	MS35756-6	<96906>	..KEY,WOODRUFF.....		HD		1	*	*	*		REF	84	29
						---*---											
P	F	R	4140-640-5784	X702-194	<00531>	..FAN,VANE,AXIAL.....		EA			*	REF	REF			84	
P	F	R	4140-640-5784	X702-194A	<00531>	..FAN,VANE,AXIAL.....		EA			*	REF	REF			84	
P	F	R	4140-631-3411	080108-010-01	<77200>	..FAN,VANE,AXIAL RPLS-.....		EA		1	REF	REF	REF	REF	*	84	30
						4140-631-1079,											
						ATTACHING PARTS											
			5306-292-5204	AN4DDH7A	<88044>	..BOLT,MACHINE.....		EA		5	*	*	*		*	84	31
			5310-187-2354	AN960PD416	<88044>	..WASHER,FLAT.....		HD		10	*	*	*		*	84	
			5310-543-4443	MS20364-428A	<96906>	..NUT,SELF-LOCKING,HEXAGON...		HD		5	*	*	*		*	84	
						---*---											
			3110-183-9969	202SZZ77	<38443>	...BEARING,BALL,ANNULAR.....		EA		OAR	*	*	*			84	
						CODE A											
P	F		1660-591-4265	A88913	<75477>	..INTAKE SECTION ASSEMBLY,...		EA		1		*	*		*	84	
						FAN CODE A											
			5310-285-5638	AN364-820C	<88044>	...NUT,SELF-LOCKING,HEXAGON..				1	*	*	*		*	84	32
			5310-167-0823	AN960-816	<88044>	...WASHER,FLAT.....		HD		1	*	*	*		*	84	33
			5310-595-7473	MS20364-1614A	<96906>	...NUT,SELF-LOCKING,HEXAGON..		EA		1	*	*	*		*	84	34
			5310-167-0821	AN960-616	<88044>	...WASHER,FLAT.....		HD		1	*	*	*		*	84	35
			5315-664-0401	MS16562-234	<96906>	...PIN,SPRING.....				1	*	*	*		*	84	36
P	F		4140-723-5803	08-002	<77200>	...SHAFT.....		EA		1	*	*	2		*	84	36A
P	F		4140-723-5804	08-003	<77200>	...IMPELLER,FAN,AXIAL.....		EA		1	*	*	2		*	84	37
			5305-271-7778	AN503-8-10	<88044>	...SCREW,MACHINE.....		HD		4	*	*	*		*	84	38
P	F		4140-716-4647	08-006	<77200>	...RETAINER,BEARING.....		EA		1	*	*	2		*	84	39
P	F		3110-779-9155	99-2570	<77200>	...BEARING,BALL,ANNULAR.....		EA		1	2	2	4		*	84	40
						CODE B											
			5340-804-2026	MS16624-1098	<96906>	...RING,RETAINING.....		EA		1	*	*	*		*	84	41
P	F		3110-769-3573	99-2569	<77200>	...BEARING,BALL,ANNULAR.....		EA		1	2	3	6		*	84	42
						CODE B											
P	F		1560-701-4705	S1635-61136-1	<78286>	..PLATE ASSEMBLY,ADJUSTMENT..		EA		1	*	*	2		*	84	43
						ATTACHING PARTS											
			5306-182-1816	AN5CH7	<88044>	..BOLT,MACHINE.....		EA		4	*	*	*		*	84	44
			5310-087-7493	MS27183-13	<96906>	..WASHER,FLAT.....		HD		4	*	*	*		*	84	
			5310-187-2399	AN960PD516	<88044>	..WASHER,FLAT.....		HD		4	*	*	*		*	84	
			5310-088-0553	MS21044N5	<96906>	..NUT,SELF-LOCKING,HEXAGON...		HD		4	*	*	*		*	84	
						---*---											
P	F		1560-567-1112	S1635-61122	<78286>	..SUPPORT ASSEMBLY,OIL.....		EA		1	*	*	*		*	84	45
						COOLER AND BLOWER,FRONT											
X2	F			S1635-61127	<78286>	...BRACE,SUPPORT.....		EA		1						84	46
						ATTACHING PARTS											
				MS20470AD4	<96906>	...RIVET.....		EA		10						84	47
						---*---											
						CODE A											

(1) SOURCE, MAINT AND REC CODE (a) SOURCE CODE	(b) MAINT LEVEL	(c) REC CODE	(2) FEDERAL STOCK NUMBER	REFERENCE NUMBER	(3) DESCRIPTION	MODELS USABLE ON CH-34C	(4) UNIT OF ISSUE	(5) QTY INC IN UNIT PACK	(6) QTY INC IN UNIT	(7) 30-DAY DS GS MAINT ALW (a) 1-20	(b) 21-50	(c) 51-100	(8) 1-YR ALW PER 100 EQUIP CNTGCY	(9) DEPOT MAINT ALW PER 100 EQUIP	(10) ILLUSTRATION (a) FIG NO	(b) ITEM NO
					CONTINUED U/O 4140-631-1079, 4140-640-5784 CODE B U/O 4140-631-3411 NOTE 1 MAKEFR AR 4720-857-1734 HOSE 2 EA 4730-017-8660 NIPPLE 2 EA 4730-967-9518 SOCKET 2 EA 4730-967-9526 SLEEVE 2 EA 5340-833-7039 DUST PLUG										84	
P	O	R	1630-624-3430	9430267 <73842>	BRAKE ASSEMBLY,HYDRAULIC..... UNIT SEE FIG.82 FOR NHA		EA		1	REF	REF	REF	REF	*	84A	
			5310-877-5795	MS21044N8 <96906>	.NUT,SELF-LOCKING,HEXAGON.... NOTE 1		EA		2	*	*	*		*	84A	1
			5310-167-0823	AN960-816 <88044>	.WASHER,FLAT.....NOTE 1		HD		4	*	*	*		*	84A	2
			5306-286-0836	AN8H21 <88044>	.BOLT,MACHINE.....		EA		2	*	*	*		*	84A	3
				NK526-632-5 <83512>	.SCREW,SELF-LOCKING....NOTE 1		EA		4						84A	4
P	F		1630-622-6235	9420392 <73842>	.LINING,BRAKE.....NOTE 1		EA		2	2	2	4	46	*	84A	5
P	H		4730-449-0906	9510894 <73842>	.PACKING,NUT.....		EA		2	*	*	*		*	84A	6
P	H		1630-182-6129	9510895 <73842>	.GRIP,ADJUSTING.....NOTE 1		EA		2	*	2	2		*	84A	7
P	H		5310-094-3004	511820-7 <73842>	.WASHER,FLAT.....NOTE 1		HD		2	*	*	*		*	84A	8
P	H		1560-446-1535	9420415 <73842>	.PISTON.....		EA		2	*	2	2		*	84A	9
X1				9510853 <73842>	..RING,RETAINING.....		EA		1						84A	10
X1				9511002 <73842>	..RING.....		EA		1						84A	11
X1				9510378 <73842>	..GUIDE,SPRING.....		EA		1						84A	12
X1				9510923 <73842>	..SPRING,HELICAL,COMPRESSION.		EA		1						84A	13
X1				9521374 <73842>	..PIN,SELF-ADJUSTING.....		EA		1						84A	14
X1				9420389 <73842>	..PISTON,ROTOR BRAKE.....		EA		1						84A	15
			5330-579-1070	MS28775-330 <96906>	.PACKING,PREFORMED.....NOTE 1		EA		2	*	*	*			84A	16
			5330-584-0266	MS28775-010 <96906>	.PACKING,PREFORMED.....NOTE 1		EA		2	*	*	*		*	84A	17
P	H		6685-863-5815	1604-73 <73842>	.PLUG,INLET.....NOTE 1		EA		2	*	*	*		*	84A	
			5330-805-2966	MS28778-4 <96906>	.PACKING,PREFORMED.....NOTE 1		EA		2	REF	REF	REF	REF	*	84A	
P	H		4730-483-7834	512054 <73842>	.BUSHING,MACHINE THREAD.....		EA		2	*	*	*		*	84A	18
			5330-808-0794	MS28778-8 <96906>	.PACKING,PREFORMED.....NOTE 1		EA		2	REF	REF	REF		*	84A	19
			5305-990-6444	MS35207-261 <96906>	.SCREW,MACHINE.....NOTE 1		HD		2	*	*	*		*	84A	20
P	H		5310-754-1834	CVC754-220D13 <80378>	.WASHER,FLAT.....		EA		2	*	*	*		*	84A	21
			1630-516-8438	AN6204-1 <88044>	.BLEEDER,VALVE.....NOTE 1		EA		2	2	5	10		*	84A	22
P	H		1630-483-7959	9511157 <73842>	.ADAPTER,BLEEDER,SINGLE..... DISK BRAKE		EA		2	*	2	2		*	84A	23
			5330-808-0794	MS28778-8 <96906>	.PACKING,PREFORMED.....NOTE 1		EA		2	REF	REF	REF		*	84A	24
			5305-253-5606	MS21318-7 <96906>	.SCREW,DRIVE.....		HD		2	*	*	*		*	84A	25
P	H		1630-865-8075	9420416 <73842>	.PLATE,DATA.....		EA		1	*	*	*		*	84A	26
P	H		1630-898-0056	9430115 <73842>	.HOUSING,BRAKE.....		EA		4	*	*	*		*	84A	27
P	H		1630-573-6563	9430246 <73842>	.DISK BRAKE.....		EA		1	*	REF	REF	REF	*	84A	28

(1) SOURCE, MAINT AND REC CODE (a) SOURCE CODE	(b) MAINT LEVEL	(c) REC CODE	(2) FEDERAL STOCK NUMBER	REFERENCE NUMBER	(3) DESCRIPTION	MODELS USABLE ON CH-34C	(4) UNIT OF ISSUE	(5) QTY INC IN UNIT PACK	(6) QTY INC IN UNIT	(7) 30-DAY DS/GS MAINT ALW (a) 1-20	(b) 21-50	(c) 51-100	(8) 1-YR ALW PER 100 EQUIP CNTGCY	(9) DEPOT MAINT ALW PER 100 EQUIP	(10) ILLUSTRATION (a) FIG NO	(b) ITEM NO
P	H		1630-707-6864	9400003 <73842>	PARTS KIT,ROTOR BRAKE U/O... 1630-624-3430 SEE FUNCTIONAL GROUP 50 FOR COMPONENTS NOTE 1 COMPONENT OF KIT 1630-707-6864		EA		1	*	2	2	22	*	84A	
		R	1630-028-0846	9430118 <73842>	BRAKE ASSEMBLY,HYDRAULIC UNIT SEE FIG.82 FOR NHA		EA		REF						84B	
P	F		1630-573-6563	9430246 <73842>	.DISK BRAKE.....		EA		1	*	*	*		*	84B	1
			1630-507-1418	9521745 <73842>	..LINING BRAKE..... USE UNTIL EXHAUSTED NO REPLACEMENT		EA		1						84B	2
P	H		1630-898-0056	9430115 <73842>	..HOUSING BRAKE.....		EA		2	*	*	*		*	84B	3
P	F		1630-898-0056	9430115 <73842>	..HOUSING BRAKE..... ATTACHING PARTS		EA		2	*	*	*		*	84B	4
			5310-877-5795	MS21044N8 <96906>	..NUT.....		EA		1	*	*	*		*	84B	5
			5310-167-0823	AN960-816 <88044>	..WASHER FLAT.....		HD		1	*	*	*		*	84B	6
			5306-286-0836	AN8H21 <88044>	..BOLT.....		EA		1	*	*	*		*	84B	7
			5310-167-0823	AN960-816 <88044>	..WASHER..... ---*---		EA		1	*	*	*		*	84B	8
P	F		4730-449-0906	9510894 <73842>	..NUT.....		EA		1	*	*	*		*	84B	9
P	F		1630-182-6129	9510895 <73842>	..GRIP.....		EA			*	*	*		*	84B	10
P	F		5310-094-3004	511820-7 <73842>	..WASHER.....		EA		1	*	*	*		*	84B	11
P	H		5340-247-7678	9510853 <73842>	...RING WIRE RETAINER.....		EA		1	*	*	*		*	84B	12
P	D		1630-436-9900	9511002 <73842>	...RING THREADED.....		EA		1					*	84B	13
P	D		1630-094-3010	9510378 <73842>	...GUIDE,SPRING.....		EA		1					*	84B	14
P	D		1630-692-3171	9510923 <73842>	...SPRING,BRAKE RELEASE.....		EA		1					*	84B	15
P	H		1630-332-5739	9521374 <73842>	...PIN ADJUSTING.....		EA		2	*	*	*		*	84B	16
P	H		1630-505-9659	9521739	...PISTON.....		EA		2	*	*	*		*	84B	17
			5330-579-1070	MS28775-330 <96906>	..PACKING,PREFORMED.....		EA		1	*	*	*		*	84B	18
			5330-260-9311	AN6227-5 <00742>	..PACKING.....		EA		1	*	*	*		*	84B	19
			4730-483-7834	512054 <73842>	..BUSHING.....		EA		1	*	*	*		*	84B	20
			5330-808-0794	AN6290-8 <88044>	..GASKET.....		EA		1	*	*	*		*	84B	21
			5305-990-6444	MS35207-261 <96906>	..SCREW,MACHINE.....		EA		1	*	*	*		*	84B	22
			5310-754-1834	CVC754-220D13 <80378>	..WASHER,FLAT.....		EA		1	*	*	*		*	84B	23
P	H		1630-516-8438	AN6204-1 <88044>	..BLEEDER VALVE HYDRAULIC.... BRAKE		EA		1	*	*	*		*	84B	24
			1630-483-7959	9511157 <73842>	..ADAPTER,BLEEDER.....		EA		1	*	*	*		*	84B	25
			5330-808-0794	AN6290-8 <96906>	..GASKET.....		EA		1	*	*	*		*	84B	26
			5305-253-5606	MS21318-7 <96906>	..SCREW,DRIVE.....		EA		4	*	*	*		*	84B	27

(1) SOURCE, MAINT AND REC CODE (a) SOURCE CODE	(b) MAINT LEVEL	(c) REC CODE	(2) FEDERAL STOCK NUMBER	REFERENCE NUMBER		(3) DESCRIPTION	MODELS USABLE ON CH-34C	(4) UNIT OF ISSUE	(5) QTY INC IN UNIT PACK	(6) QTY INC IN UNIT	(7) 30-DAY DS GS MAINT ALW (a) 1-20	(b) 21-50	(c) 51-100	(8) 1-YR ALW PER 100 EQUIP CNTGCY	(9) DEPOT MAINT ALW PER 100 EQUIP	(10) ILLUSTRATION (a) FIG NO	(b) ITEM NO
				S1665-61407-1	<78286>	ROTOR BRAKE HYDRAULIC LINES.. INSTALLATION SEE FIG.40 FOR NHA										85	
MF	F			S1665-61403-1	<78286>	.TUBE ASSEMBLY,ELBOW TO UNION NOTE 1		EA		1						85	1
			4730-277-5081	AN6283D4	<88044>	.LOCK NUT,TUBE FITTING.....		EA		1	*	*	*		*	85	5
			5330-805-2966	MS28778-4	<96906>	.PACKING,PREFORMED.....		EA		1	REF	REF	REF	REF	*	85	
			5330-186-4947	MS28777-4	<96906>	.WASHER,NONMETALLIC.....		LL		1	*	*	*		*	85	
			4730-803-5049	MS24396D4	<96906>	.ELBOW,TUBE.....		EA		1	*	*	*		*	85	
				S1665-61400	<78286>	.CYLINDER INSTALLATION,..... ROTOR BRAKE MASTER				1						85	
		R	1630-654-3202	S1665-61410	<78286>	..CYLINDER,HYDRAULIC BRAKE... RPL-BY 1650-589-4153										85	
		R	1630-955-9605	14946	<81708>	..CYLINDER,HYDRAULIC BRAKE... RPL-BY 1650-589-4153										85	
		R	1630-676-5116	11190	<99643>	..CYLINDER,HYDRAULIC BRAKE... RPL-BY 1650-589-4153										85	
		R	1630-507-1397	651-40-1	<70236>	..CYLINDER HYDRAULIC BRAKE... RPL-BY 1650-589-4153										85	
P	O	R	1630-589-4153	9011	<70236>	..MASTER CYLINDER,BRAKE..... RPLS-- 1630-654-3202, 1630-676-5116, 1630-955-9605,& 1650-507-1397 SEE FIG.85B FOR BREAKDOWN CODE E		EA		1	2	3	5	60	*	85	6
						ATTACHING PARTS											
			5306-182-1866	AN4CH21A	<88044>	..BOLT,MACHINE.....		EA		1	*	*	*		*	85	7
			5310-187-2354	AN960PD416	<88044>	..WASHER,FLAT.....		HD		2	*	*	*		*	85	
			5310-877-5796	MS21044N4	<96906>	..NUT,SELF-LOCKING,HEXAGON...		EA		1	*	*	*		*	85	
			5306-182-1854	AN3CH5A	<88044>	..BOLT,MACHINE.....		EA		2	*	*	*		*	85	8
			5310-183-4406	AN960PD10	<88044>	..WASHER,FLAT.....		HD		2	*	*	*		*	85	
			5310-877-5797	MS21044N3	<96906>	..NUT,SELF-LOCKING,HEXAGON...		EA		2	*	*	*		*	85	
						---*---											
			5340-580-5873	NAS43DD4-64	<80205>	..SPACER,SLEEVE.....		EA		1	*	*	*		*	85	9
MF	F			S1665-61403-3	<78286>	.TUBE ASSEMBLY.....CODE A NOTE 1		EA		1						85	10
MF	O			S1665-61403-27	<78286>	.TUBE ASSEMBLY.....CODE B NOTE 1		EA		1						85	
			5310-282-7823	MS24400D4	<96906>	.NUT,PLAIN,HEXAGON.....		LL		1	*	*	*		*	85	14
			5310-187-2401	AN960PD716	<88044>	.WASHER,FLAT.....		HD		1	*	*	*		*	85	
			4730-804-8683	MS24389D4	<96906>	.TEE,TUBE.....		EA		1	*	*	*		*	85	
			4730-725-4351	MS24394D4	<96906>	.ELBOW,TUBE.....		EA		1	*	*	*		*	85	15
			5330-186-4947	MS28777-4	<96906>	.WASHER,NONMETALLIC.....		LL		1	*	*	*		*	85	
			5330-805-2966	MS28778-4	<96906>	.PACKING,PREFORMED.....		EA		1	REF	REF	REF	REF	*	85	
			4730-277-6371	AN6289D4	<88044>	.LOCKNUT,TUBE FITTING.....		EA		1	*	*	*		*	85	16
			4720-875-1482	MS27373H0110	<96906>	.HOSE ASSEMBLY..... TETRAFLOUROETHYLENE		EA		1	*	*	*		*	85	17
			4730-834-9560	MS24392D4	<96906>	.NIPPLE,TUBE.....		EA		1	REF	REF	REF	REF	*	85	18
			5330-805-2966	MS28778-4	<96906>	.PACKING,PREFORMED.....		EA		1	REF	REF	REF	REF	*	85	
P	F		5930-603-8474	6885-20M	<38056>	.SWITCH,PRESSURE..... ATTACHING PARTS		EA		1	*	*	*		*	85	19

(1) SOURCE,MAINT AND REC CODE (a) SOURCE CODE	(b) MAINT LEVEL	(c) REC CODE	(2) FEDERAL STOCK NUMBER	REFERENCE NUMBER	(3) DESCRIPTION	MODELS USABLE ON CH-34C	(4) UNIT OF ISSUE	(5) QTY INC IN UNIT PACK	(6) QTY INC IN UNIT	(7) 30-DAY DS/GS MAINT ALW (a) 1-20	(b) 21-50	(c) 51-100	(8) 1-YR ALWPER 100 EQUIP CNTGCY	(9) DEPOT MAINT ALWPER 100 EQUIP	(10) ILLUSTRATION (a) FIG NO	(b) ITEM NO
			5306-182-2058	AN3H5A <88044>	.BOLT,MACHINE.....		EA		4	*	*	*		*	85	
			5310-183-4406	AN960PD10 <88044>	.WASHER,FLAT.....		HD		4	*	*	*		*	85	
					---*---											
P	F		1560-780-4363	S1665-61411 <78286>	.BRACKET ASSEMBLY.....		EA		1	*	*	*		*	85	19A
P	F		5935-754-8711	MS3108R10SL3S <96906>	.CONNECTOR,PLUG,ELECTRICAL...		EA		1	*	*	*		*	85	
				S1665-61403-5 <78286>	.TUBE ASSEMBLY.....CODE C		EA		1						85	20
MF	F			S1665-61403-43 <78286>	.TUBE ASSEMBLY.....CODE D		EA		1						85	
					NOTE 1											
			4730-277-6371	AN6289D4 <88044>	.LOCKNUT,TUBE FITTING.....		EA		1	*	*	*		*	85	24
			5330-805-2966	MS28778-4 <96906>	.PACKING,PREFORMED.....		EA		1	REF	REF	REF	REF	*	85	
			5330-186-4947	MS28777-4 <96906>	.WASHER,NONMETALLIC.....		LL		1	*	*	*		*	85	
			4730-720-4984	MS24390D4 <96906>	.TEE,TUBE.....		EA		1	*	*	*		*	85	
			4730-057-4553	MS24397D3 <96906>	.REDUCER,BOSS.....		EA		1	*	*	*		*	85	25
			5330-808-0794	MS28778-8 <96906>	.PACKING,PREFORMED.....		EA		1	REF	REF	REF		*	85	
			1650-031-5686	550645-4 <06840>	.ACCUMULATOR,HYDRAULIC.....										85	
					RPL-BY 1650-685-1136											
P	O	R	1650-685-1136	550645-4-1 <06840>	.ACCUMULATOR RPLS--.....		EA		1	2	2	3	34	*	85	26
					1650-031-5686											
					ATTACHING PARTS											
			4820-535-6483	AN6287-1 <88044>	..VALVE AIR.....		EA		1	*	*	*		*	85	26A
P	F		5340-334-5765	1005429 <06840>	..RETAINING RING.....		EA		1	*	*	*		*	85	26B
X1				1007097 <06840>	..HEAD.....		EA		1						85	26C
			5330-641-3407	MS28784-224 <96906>	..PACKING PREFORMED.....		EA		1	*	*	*		*	85	26D
			5330-171-5893	MS28783-2 <96906>	..RETAINER PACKING.....		EA		2	*	*	*			85	26E
X1				550743 <06840>	..PISTON.....		EA		1						85	26F
			5330-559-6184	MS28775-326 <96906>	..PACKING PREFORMED.....		EA		2	*	*	*		*	85	26G
X1				550744-4 <06840>	..BARREL ASSEMBLY.....		EA		1						85	26H
			5340-993-6250	EAB700D35 <81996>	.CLAMP,LOOP.....		EA		2	*	*	*		*	85	27
			5306-182-2059	AN3H6A <88044>	.BOLT,MACHINE.....		HD		2	*	*	*		*	85	28
			5310-183-4406	AN960PD10 <88044>	.WASHER,FLAT.....		HD		2	*	*	*		*	85	
					---*---											
			4730-834-9560	MS24392D4 <96906>	.NIPPLE,TUBE.....		EA		1	REF	REF	REF	REF	*	85	29
AF	F			S1665-61403-21 <78286>	.TUBE ASSEMBLY.....CODE C		EA		1						85	30
MF	F			S1665-61403-45 <78286>	.TUBE ASSEMBLY.....CODE D		EA		1						85	
					NOTE 1											
MF	F			S1665-61403-23 <78286>	.TUBE ASSEMBLY.....CODE C		EA		1						85	34
					NOTE 1											
MF	F			S1665-61403-51 <78286>	.TUBE ASSEMBLY.....CODE D		EA		1						85	
					NOTE 1											
			4730-277-6371	AN6289D4 <88044>	.LOCKNUT,TUBE FITTING.....		EA		1	*	*	*		*	85	38
			5330-805-2966	MS28778-4 <96906>	.PACKING,PREFORMED.....		EA		1	REF	REF	REF	REF	*	85	
			5330-186-4947	MS28777-4 <96906>	.WASHER,NONMETALLIC.....		LL		1	*	*	*		*	85	
			4730-720-4984	MS24390D4 <96906>	.TEE,TUBE.....		EA		1	*	*	*		*	85	
AF	F			S1665-61403-39 <78286>	.TUBE ASSEMBLY.....		EA		1						85	39
			4730-834-9560	MS24392D4 <96906>	.NIPPLE,TUBE.....		EA		1	REF	REF	REF	REF	*	85	40
			5330-805-2966	MS28778-4 <96906>	.PACKING,PREFORMED.....		EA		1	REF	REF	REF	REF	*	85	
P	O		4820-541-4030	AB44-07 <45598>	.VALVE,SAFETY RELIEF.....		EA		1	*	*	*		*	85	41
					ATTACHING PARTS											
			5340-989-4571	EAB700D14 <81996>	.CLAMP,SUPPORT.....		EA		1	*	*	*		*	85	42
			5305-958-1009	MS35219-55 <96906>	.SCREW,MACHINE.....		EA		1	*	*	*		*	85	43
			5310-877-5798	MS21044D3 <96906>	.NUT,SELF-LOCKING,HEXAGON....		EA		1	*	*	*		*	85	
					---*---											

(1) SOURCE, MAINT AND REC CODE (a) SOURCE CODE	(b) MAINT LEVEL	(c) REC CODE	(2) FEDERAL STOCK NUMBER	REFERENCE NUMBER		(3) DESCRIPTION	MODELS USABLE ON CH-34C	(4) UNIT OF ISSUE	(5) QTY INC IN UNIT PACK	(6) QTY INC IN UNIT	(7) 30-DAY DS GS MAINT ALW (a) 1-20	(b) 21-50	(c) 51-100	(8) 1-YR ALW PER 100 EQUIP CNTGCY	(9) DEPOT MAINT ALW PER 100 EQUIP	(10) ILLUSTRATION (a) FIG NO	(b) ITEM NO
			5340-598-8251	AN743-12	<88044>	.BRACKET.....		EA		1	*	*	*		*	85	
			5340-203-8967	NAS43DD3-12	<80205>	.SPACER,SLEEVE.....		EA		1	*	*	*		*	85	44
			4730-722-1207	MS24402D4	<96906>	.TEE,TUBE.....		EA		1	*	*	*		*	85	44A
MF	F			S1665-61403-9	<78286>	.TUBE ASSEMBLY,ROTOR BRAKE...		EA		1						85	45
						SYSTEM UNION TO UNION											
						NOTE 1											
			4730-684-6903	MS24395D4	<96906>	.TEE,TUBE.....		EA		1	*	*	*		*	85	48A
			4730-277-6371	AN6289D4	<88044>	.LOCKNUT,TUBE FITTING.....		EA		1	*	*	*		*	85	
			5330-805-2966	MS28778-4	<96906>	.PACKING,PREFORMED.....		EA		1	REF	REF	REF	REF	*	85	
			5330-186-4947	MS28777-4	<96906>	.WASHER,NONMETALLIC.....		LL		1	*	*	*		*	85	
MF	F			S1665-61403-11	<78286>	.TUBE ASSEMBLY,ROTOR BRAKE...		EA		1						85	49
						SYSTEM UNION TO TEE											
						NOTE 1											
			4730-684-6903	MS24395D4	<96906>	.TEE,TUBE.....		EA		1	*	*	*		*	85	52A
			4730-277-6371	AN6289D4	<88044>	.LOCKNUT,TUBE FITTING.....		EA		1	*	*	*		*	85	
			5330-805-2966	MS28778-4	<96906>	.PACKING,PREFORMED.....		EA		1	REF	REF	REF	REF	*	85	
			5330-186-4947	MS28777-4	<96906>	.WASHER,NONMETALLIC.....		LL		1	*	*	*		*	85	
MF	F			S1665-61403-15	<78286>	.TUBE ASSEMBLY,ROTOR BRAKE...		EA		1						85	53
						SYSTEM TEE TO ELBOW											
						NOTE 1											
			4730-725-4351	MS24394D4	<96906>	.ELBOW,TUBE.....		EA		1	*	*	*		*	85	56A
			4730-277-6371	AN6289D4	<88044>	.LOCKNUT,TUBE FITTING.....		EA		1	*	*	*		*	85	
			5330-805-2966	MS28778-4	<96906>	.PACKING,PREFORMED.....		EA		1	REF	REF	REF	REF	*	85	
			5330-186-4947	MS28777-4	<96906>	.WASHER,NONMETALLIC.....		LL		1	*	*	*		*	85	
MF	F			S1665-61403-13	<78286>	.TUBE ASSEMBLY.....		EA		1						85	57
						NOTE 1											
			4730-720-4984	MS24390D4	<96906>	.TEE,TUBE.....		EA		1	*	*	*		*	85	61
			4730-277-6371	AN6289D4	<88044>	.LOCKNUT,TUBE FITTING.....		EA		1	*	*	*		*	85	
			5330-805-2966	MS28778-4	<96906>	.PACKING,PREFORMED.....		EA		1	REF	REF	REF	REF	*	85	
			5330-186-4947	MS28777-4	<96906>	.WASHER,NONMETALLIC.....		LL		1	*	*	*		*	85	
P	F		1560-780-4364	S1665-61403-41	<78286>	.TUBE ASSEMBLY,METAL.....		EA		1	*	*	*		*	85	62
P	O		4820-497-4648	AN6207-4	<88044>	.VALVE,HYDRAULIC CHECK.....		EA		1	*	*	*		*	85	63
			4730-278-5006	AN929-4	<88044>	.CAP,TUBE.....		EA		1	*	*	*		*	85	64
						CODE A											
						USBL EFF 53-4475 THRU 54-3050											
						CODE B											
						USBL EFF 55-4462 & SUBSEQUENT											
						CODE C											
						USBL EFF 53-4475 THRU 56-4312											
						CODE D											
						USBL EFF 56-4313 & SUBSEQUENT											
						CODE E											
						USBL EFF 53-4475 THRU											
						53-4554,54-882 THRU 54-937,											
						54-2860 THRU 54-2914,&											
						54-2995 THRU 54-3026											
						NOTE 1											
						MAKEFR											
						AR 4710-278-6398 TUBE											
						2 EA 4730-287-0289 NUT											
						2 EA 4730-302-8641 SLEEVE											

(1) SOURCE, MAINT AND REC CODE (a) SOURCE CODE	(b) MAINT LEVEL	(c) REC CODE	(2) FEDERAL STOCK NUMBER	REFERENCE NUMBER	(3) DESCRIPTION	MODELS USABLE ON CH-34C	(4) UNIT OF ISSUE	(5) QTY INC IN UNIT PACK	(6) QTY INC IN UNIT	(7) 30-DAY DS/GS MAINT ALW (a) 1-20	(b) 21-50	(c) 51-100	(8) 1-YR ALW PER 100 EQUIP CNTGCY	(9) DEPOT MAINT ALW PER 100 EQUIP	(10) ILLUSTRATION (a) FIG NO	(b) ITEM NO
P	O	R	1630-589-4153	9011 <70236>	MASTER CYLINDER,BRAKE SEE... FIG.40 FOR NHA		EA		1	REF	REF	REF	REF	*	85B	
X2	H			9011-3-1 <07915>	.LEVER,MANUAL CONTROL..... ATTACHING PARTS		EA		1						85B	1
				79-012-062-1000 <72962>	.PIN,ROLL.....NOTE 2		EA		1						85B	3
				9011-1-9 <07915>	.PIN,HINGE.....NOTE 1		EA		1						85B	4
				AN381-1-16 <88044>	.PIN,COTTER.....NOTE 1		EA		1						85B	5
				79-012-062-0500 <72962>	.PIN,ROLL.....NOTE 1		EA		1						85B	6
				9011-1-8 <07915>	.PIN,HINGE.....NOTE 1		EA		1						85B	7
					---*---											
				79-028-125-1500 <72962>	.PIN,ROLL.....NOTE 1		EA		1						85B	8
P	H		1630-992-4590	9011-1-5 <70236>	.LATCH,BRAKE CYLINDER.....		EA		1	*	*	*		*	85B	9
				9011-1-6 <07915>	.SPRING,LATCH.....NOTE 1		EA		1						85B	10
			5315-682-1460	MS24665-157 <96906>	.PIN,COTTER.....		EA		1	*	*	*		*	85B	11
				79-028-125-0750 <07915>	.PIN,ROLL.....NOTE 1		EA		1						85B	12
				9011-1-7 <07915>	.SPRING,DETENT.....NOTE 1		EA		1						85B	13
			3110-958-7325	MS134361 <96906>	.BALL,BEARING.....		EA		1	*	*	*	2	*	85B	14
P	H		1630-992-4595	9011-1-10 <70236>	.PLATE,COVER,BRAKE..... ATTACHING PARTS		EA		1	*	*	*		*	85B	15
			5305-942-8431	MS35275-245 <96906>	.SCREW,MACHINE.....		EA		6	*	*	*		*	85B	16
					---*---											
				9011-1-11 <07915>	.GASKET.....NOTE 2		EA		2						85B	17
P	H		1630-992-4594	9011-1-12 <70236>	.WINDOW,BRAKE CYLINDER.....		EA		1	*	*	*		*	85B	18
P	H		1630-065-8727	9011-1-15 <70236>	.SCREW,STOP,HYDRAULIC.....		EA		1	*	*	*		*	85B	19
P	H		1630-545-9435	651-10-2 <07915>	.PLUG ASSEMBLY.....		EA		1	*	2	2		*	85B	20
			5330-804-5695	MS28778-6 <96906>	.PACKING PREFORMED.....NOTE 2		EA		1	REF	REF	REF		*	85B	21
			4730-080-1852	MS24391-21 <96906>	.PLUG,MACHINE THREAD.....		EA		1	*	*	*		*	85B	22
			5330-803-7208	MS28778-2 <96906>	.PACKING,PREFORMED.....NOTE 2		EA		1	REF	REF	REF		*	85B	23
P	H		4130-489-0107	SP4 <60995>	.PLUG,PROTECTIVE.....		EA		1	*	2	2		*	85B	24
P	H		4730-972-3250	9011-1-3 <07915>	.PLUG,END..... ATTACHING PARTS		EA		1	*	*	*		*	85B	25
			5315-234-1856	MS24665-155 <96906>	.PIN,COTTER.....NOTE 2		HD		2	*	*	*		*	85B	26
			5310-188-7721	AN960PD6 <88044>	.WASHER,FLAT.....		HD		2	*	*	*		*	85B	27
				9011-1-18B <07915>	.PIN,FLAT HEAD.....NOTE 1		EA		2						85B	28
					---*---											
			5330-579-8156	MS28775-212 <96906>	.PACKING,PREFORMED.....NOTE 2		EA		1	*	*	*		*	85B	29
				9011-1-2 <07915>	.SPRING,MAIN.....NOTE 1		EA		1						85B	30
P	H		1630-650-4757	9011-2-2 <07915>	.PISTON,BRAKE CYLINDER.....		EA		1	*	*	*		*	85B	31
P	H		1630-992-4592	9011-1-1 <70236>	.ROD,PISTON,BRAKE..... ATTACHING PARTS		EA		1	*	*	*		*	85B	32
				AN381-1-16 <88044>	.PIN,COTTER.....NOTE 1		EA		1						85B	33
				79-012-062-0500 <72962>	.PIN,ROLL.....NOTE 1		EA		1						85B	34
				9011-1-8 <07915>	.PIN,HINGE.....NOTE 1		EA		1						85B	35
					---*---											
			5310-857-4957	MS21044D6 <96906>	.NUT,SELF-LOCKING,HEXAGON.... NOTE 2		EA		1	*	*	*		*	85B	36
				9011-1-14 <07915>	.VALVE.....NOTE 1		EA		1						85B	37
			5330-579-8156	MS28775-212 <96906>	.PACKING,PREFORMED.....NOTE 2		EA		2	*	*	*		*	85B	38
			5330-050-1211	AN622788 <88044>	.PACKING,PREFORMED.....NOTE 2		EA		1	*	*	*		*	85B	39
P	H		1630-992-4593	9011-1-13 <70236>	.PLATE,IDENTIFICATION..... ATTACHING PARTS		EA		1	*	*	*		*	85B	40
			5305-253-5603	MS21318-1 <96906>	.SCREW,DRIVE.....		HD		4	*	*	*		*	85B	41

(1) SOURCE, MAINT AND REC CODE (a) SOURCE CODE	(b) MAINT LEVEL	(c) REC CODE	(2) FEDERAL STOCK NUMBER	REFERENCE NUMBER	(3) DESCRIPTION	MODELS USABLE ON CH-34C	(4) UNIT OF ISSUE	(5) QTY INC IN UNIT PACK	(6) QTY INC IN UNIT	(7) 30-DAY DS GS MAINT ALW (a) 1-20	(b) 21-50	(c) 51-100	(8) 1-YR ALWPER 100 EQUIP CNTGCY	(9) DEPOT MAINT ALWPER 100 EQUIP	(10) ILLUSTRATION (a) FIG NO	(b) ITEM NO
					CONTINUED ---*---										85B	41
X2	H			9011-4-1 <07915>	.BODY,VALVE.....		EA		1						85B	42
			5330-691-0145	MS28775-022 <96906>	.PACKING,PREFORMED.....NOTE 2		EA		1	*	*	*		*	85B	43
			5330-543-7088	MS28774-212 <96906>	.RETAINER,PACKING.....NOTE 2		AV		1	*	*	*		*	85B	44
P	H		1630-733-8381	9011-1-19 <70236>	PARTS KIT,BRAKE CYLINDER..... U/O 1650-589-4153 SEE FUNCTIONAL GROUP 50 FOR COMPONENTS		EA		1	*	2	2	22	*	85B	
P	F		1630-733-8382	9011-1-20 <70236>	PARTS KIT,BRAKE CYLINDER..... U/O 1630-589-4153 SEE FUNCTIONAL GROUP 50 FOR COMPONENTS NOTE 1 COMPONENT OF KIT 1630-733-8381 NOTE 2 COMPONENT OF KIT 1650-773-8382		EA		1	2	2	3	31	*	85B	
				S1640-62000 <78286>	FORWARD FLIGHT CONTROLS..... INSTALLATION SEE FIG.40 FOR NHA										86	
				S1640-62100 <78286>	.AZIMUTH CONTROLS..... INSTALLATION SEE FIG.87 FOR BREAKDOWN				1						86	1
				S1640-62600-1 <78286>	.FORWARD DIRECTIONAL..... CONTROLS INSTALLATION SEE FIG.101 FOR BREAKDOWN				1						86	2
				S1640-61400 <78286>	.COLLECTIVE PITCH CONTROLS... INSTALLATION SEE FIG. 107 FOR BREAKDOWN				1						86	3
				S1625-61800 <78286>	.TAIL WHEEL LOCK CONTROLS.... INSTALLATION SEE FIG.108 FOR BREAKDOWN				1						86	4
				S1640-62100 <78286>	AZIMUTH CONTROLS..... INSTALLATION SEE FIG.86 FOR NHA										87	
P	O		1560-767-0452	S1640-61156 <78286>	.GASKET..... ATTACHING PARTS		EA		1	*	*	*		*	87	1
			5306-182-2060	AN3H7A <88044>	.BOLT,MACHINE.....		HD		6	*	*	*		*	87	2

(1) SOURCE, MAINT AND REC CODE (a) SOURCE CODE	(b) MAINT LEVEL	(c) REC CODE	(2) FEDERAL STOCK NUMBER	REFERENCE NUMBER	(3) DESCRIPTION	MODELS USABLE ON CH-34C	(4) UNIT OF ISSUE	(5) QTY INC IN UNIT PACK	(6) QTY INC IN UNIT	(7) 30-DAY DS GS MAINT ALW (a) 1-20	(b) 21-50	(c) 51-100	(8) 1-YR ALW PER 100 EQUIP CNTGCY	(9) DEPOT MAINT ALW PER 100 EQUIP	(10) ILLUSTRATION (a) FIG NO	(b) ITEM NO
			5310-183-4406	AN960PD10	<88044> .WASHER,FLAT.....		HD		6	*	*	*		*	87	
					---*---											
P	O		1560-301-3563	S1640-61155	<78286> .BOOT ASSEMBLY,FLIGHT.....		EA		1	2	3	6		*	87	3
					CONTROLS											
AF	F			S1640-62158-2	<78286> .STICK AND SOCKET ASSEMBLY,..		EA		1						87	4
					PILOTS											
					ATTACHING PARTS											
			5306-206-6375	NAS464-4-39	<80205> .BOLT,SHEAR.....		EA		1	*	*	*		*	87	5
			5310-141-1795	AN960-416	<88044> .WASHER,FLAT.....		HD		2	*	*	*		*	87	
			5310-176-8108	AN320-4	<88044> .NUT,SLOTTED,HEXAGON.....		HD		1	*	*	*		*	87	
			5315-234-1856	MS24665-155	<96906> .PIN,COTTER.....		HD		1	*	*	*		*	87	
					---*---											
			1560-339-9574	S1640-61115	<78286> ..SOCKET ASSEMBLY.....		EA								87	
P	F		1560-591-6704	S1640-61115-1	<78286> ..SOCKET ASSEMBLY.....		EA		1	*	*	2		*	87	6
					ATTACHING PARTS											
			5315-224-9423	AN386-2-13	<88044> ..PIN,TAPERED.....		EA		1	*	*	*		*	87	7
			5310-167-0685	AN975-3	<88044> ..WASHER,RECESSED.....		HD		1	*	*	*		*	87	
			5310-285-2177	AN320-3	<88044> ..NUT,SLOTTED,HEXAGON.....		HD		1	*	*	*		*	87	
			5315-234-1856	MS24665-155	<96906> ..PIN,COTTER.....		HD		1	*	*	*		*	87	
					---*---											
			3120-725-2962	NAS537-4P26	<80205> ..BUSHING,SLEEVE.....		EA		1	*	*	*		*	87	
AF	F			S1640-62115	<78286> ..STICK ASSEMBLY,PILOTS.....		EA		1						87	8
					AZIMUTH CONTROLS											
			1680-586-6772	S1640-62104-1	<78286> ...GRIP ASSEMBLY,AZIMUTH.....										87	
					STICK RPL-BY											
					1680-710-1843											
P	F		1680-710-1843	21225-7	<83075> ...GRIP ASSEMBLY RPLS--.....		EA		1	*	2	2		*	87	9
					1680-586-6772											
P	F		5930-614-5284	21216	<83075> ....SWITCH,STICK GRIP.....		EA		1	*	*	*		*	87	10
P	F		5930-519-3361	MS25089-5A	<96906> ....SWITCH,PUSH.....		EA		1	*	*	*		*	87	11
P	F		5930-612-6993	21230	<83075> ....SWITCH,STICK GRIP.....		EA		1	*	*	*		*	87	12
P	F		5930-621-2206	21215	<83075> ....SWITCH,PUSH.....		EA		1	*	*	*		*	87	13
P	F		5930-548-5635	21105	<83075> ....SWITCH,STICK GRIP.....		EA		1	*	*	*		*	87	14
P	F		5930-519-3361	MS25089-5A	<96906> ....SWITCH,PUSH.....		EA		1	*	*	*		*	87	
			5935-755-3144	MS3106R20-27P	<96906> ...CONNECTOR.....		EA		1	*	*	*		*	87	15
P	O		5970-811-9461	MIL17444BTYPE1S1	<81349> ...INSULATION TUBE-0.438 ID..		FT		AR	*	*	*		*	87	16
P	F		1560-674-5494	S1640-61120-8	<78286> ...STICK,ASSEMBLY,FUSELAGE...		EA		1	*	*	*		*	87	17
			1560-334-6416	S1640-64009-7	<78286> .ROD ASSEMBLY RPL-BY.....										87	
					1560-563-9952											
P	F		1560-563-9952	S1640-61157-3	<78286> .ROD ASSEMBLY RPLS--.....		EA		1	*	*	2		*	87	18
					1560-334-6416											
					ATTACHING PARTS											
			5306-206-6370	NAS464-4-18	<80205> .BOLT,SHEAR.....		EA		2	*	*	*		*	87	19
			5310-187-2354	AN960PD416	<88044> .WASHER,FLAT.....		HD		2	*	*	*		*	87	
			5310-184-9001	AN960PD416L	<88044> .WASHER,FLAT.....		HD		4	*	*	*		*	87	
			5310-176-8108	AN320-4	<88044> .NUT,SLOTTED,HEXAGON.....		HD		2	*	*	*		*	87	
			5315-234-1856	MS24665-155	<96906> .PIN,COTTER.....		HD		2	*	*	*		*	87	
					---*---											
			5310-167-1300	AN316-6R	<88044> ..NUT,PLAIN,HEXAGON.....		HD		1	*	*	*		*	87	20
P	F		3110-516-5763	REP4M6FS210	<21335> ..BEARING,BALL,ROD END.....		EA		1	*	*	*		*	87	21
			3110-183-9858	MS26508-4S10	<96906> ..BEARING ROD END.....		EA		1	*	*	*		*	87	
X1				S1640-61311-2	<78286> ..BEARING,BALL,ROD END.....		EA		1						87	22

(1) SOURCE, MAINT AND REC CODE (a) SOURCE CODE	(b) MAINT LEVEL	(c) REC CODE	(2) FEDERAL STOCK NUMBER	REFERENCE NUMBER		(3) DESCRIPTION	MODELS USABLE ON CH-34C	(4) UNIT OF ISSUE	(5) QTY INC IN UNIT PACK	(6) QTY INC IN UNIT	(7) 30-DAY DS GS MAINT ALW (a) 1-20	(b) 21-50	(c) 51-100	(8) 1-YR ALW PER 100 EQUIP CNTGCY	(9) DEPOT MAINT ALW PER 100 EQUIP	(10) ILLUSTRATION (a) FIG NO	(b) ITEM NO
						CONTINUED RPLS-- 1560-554-1072										87	22
			1560-326-3515	S1640-61153-2	<78286>	.ROD ASSEMBLY RPL-BY..... 1560-633-4394										87	
P	O		1560-633-4394	S1640-61153-5	<78286>	.ROD ASSEMBLY,AZIMUTH..... CONTROLS RPLS-- 1560-326-3515 ATTACHING PARTS		EA		1	*	*	2		*	87	24
			5306-206-6370	NAS464-4-18	<80205>	.BOLT,SHEAR.....		EA		2	*	*	*		*	87	25
			5310-187-2354	AN960PD416	<88044>	.WASHER,FLAT.....		HD		2	*	*	*		*	87	
			5310-184-9001	AN960PD416L	<88044>	.WASHER,FLAT.....		HD		4	*	*	*		*	87	
			5310-176-8108	AN320-4	<88044>	.NUT,SLOTTED,HEXAGON.....		HD		2	*	*	*		*	87	
			5315-234-1856	MS24665-155	<96906>	.PIN,COTTER.....		HD		2	*	*	*		*	87	
						---*---											
			5310-167-1300	AN316-6R	<88044>	..NUT,PLAIN,HEXAGON.....		HD		1	*	*	*		*	87	26
P	O		3110-516-5763	REP4M6FS210	<21335>	..BEARING,BALL,ROD END..... OBSLTS 3110-839-3976		EA		1	*	*	*		REF	87	27
X1				S1640-61311-2	<78286>	..BEARING,BALL,ROD END..... RPLS-- 1560-554-1072		EA		1						87	28
AF	F			S1640-62116	<78286>	.STICK ASSEMBLY,AZIMUTH..... CONTROLS		EA		1						87	30
P	F		1680-710-1843	21225-7	<83075>	..GRIP ASSEMBLY RPLS--..... 1680-586-6772		EA		1	*	REF	REF		REF	87	31
P	F		5930-614-5284	21216	<83075>	...SWITCH,STICK GRIP.....		HD		1	*	*	*		REF	87	
			5930-703-0420	21325	<83075>	...SWITCH,PUSH..... RPL-BY 5930-519-3361		EA		1						87	
P	F		5930-519-3361	MS25089-5A	<96906>	...SWITCH,PUSH..... RPLS 5930-703-0420		EA		1	*	*	*		*	87	
P	F		5930-612-6993	21230	<83075>	...SWITCH,STICK GRIP.....		EA		1	*	*	*		*	87	
P	F		5930-621-2206	21215	<83075>	...SWITCH,PUSH.....		EA		1	*	*	*		*	87	
P	F		5930-548-5635	21105	<83075>	...SWITCH,STICK GRIP.....		EA		1	*	*	*		*	87	
			5935-755-3144	MS3106R20-27P	<96906>	..CONNECTOR.....		EA		1	*	*	*		*	87	32
P	F		5315-550-8704	S14-40-2018	<78286>	..PIN,STRAIGHT,HEADLESS.....		EA		1	2	2	5		*	87	33
P	F		1560-692-2614	S14-40-2140	<78286>	..NUT ASSEMBLY,FLIGHT..... CONTROLS		EA		1	*	*	*		*	87	34
P	F		1560-674-5494	S1640-61120-8	<78286>	..STICK ASSEMBLY,FUSELAGE....		EA		1	*	*	*		REF	87	36
P	O		1560-301-3563	S1640-61155	<78286>	.BOOT ASSEMBLY,FLIGHT..... CONTROLS		EA		1	REF	REF	REF		REF	87	37
P	O		1560-767-0452	S1640-61156	<78286>	.GASKET..... ATTACHING PARTS		EA		1	*	*	*		REF	87	38
			5306-182-2060	AN3H7A	<88044>	.BOLT,MACHINE.....		HD		6	*	*	*		*	87	39
			5310-183-4406	AN960PD10	<88044>	.WASHER,FLAT.....		HD		6	*	*	*		*	87	
						---*---											
X1				S1640-61311-3	<78286>	.BEARING,BALL ROD END.....		EA		1						87	
			1560-326-3514	S1640-61153-1	<78286>	.ROD ASSEMBLY RPL-BY..... 1560-633-4393										87	
P	O		1560-633-4393	S1640-61153-4	<78286>	.ROD ASSEMBLY,AZIMUTH..... CONTROLS RPLS-- 1560-326-3514 ATTACHING PARTS		EA		1	*	*	2		*	87	40
			5306-206-6370	NAS464-4-18	<80205>	.BOLT,SHEAR.....		EA		2	*	*	*		*	87	41
			5310-187-2354	AN960PD416	<88044>	.WASHER,FLAT.....		HD		2	*	*	*		*	87	

(1) SOURCE, MAINT AND REC CODE (a) SOURCE CODE	(b) MAINT LEVEL	(c) REC CODE	(2) FEDERAL STOCK NUMBER	REFERENCE NUMBER	(3) DESCRIPTION	MODELS USABLE ON CH-34C	(4) UNIT OF ISSUE	(5) QTY INC IN UNIT PACK	(6) QTY INC IN UNIT	(7) 30-DAY DS/GS MAINT ALW (a) 1-20	(b) 21-50	(c) 51-100	(8) 1-YR ALW PER 100 EQUIP CNTGCY	(9) DEPOT MAINT ALW PER 100 EQUIP	(10) ILLUSTRATION (a) FIG NO	(b) ITEM NO
			5310-184-9001	AN960PD416L	<88044> .WASHER,FLAT.....		HD		4	*	*	*		*	87	
			5310-176-8108	AN320-4	<88044> .NUT,SLOTTED,HEXAGON.....		HD		2	*	*	*		*	87	
			5315-234-1856	MS24665-155	<96906> .PIN,COTTER.....		HD		2	*	*	*		*	87	
					---*---											
			5310-167-1300	AN316-6R	<88044> ..NUT,PLAIN,HEXAGON.....		HD		1	*	*	*		*	87	42
P	O		3110-516-5763	REP4M6FS210	<21335> ..BEARING,BALL,ROD END..... OBSLTS 3110-839-3976		EA		1	*	*	*		REF	87	43
X1				S1640-61311-2	<78286> ..ROD END ASSEMBLY..... RPLS-- 1560-554-1072		EA		1						87	44
			1560-334-6388	S1640-61470-2	<78286> .ROD ASSEMBLY.....		EA								87	
			1560-305-1662	S1640-61157-1	<78286> .ROD ASSEMBLY,FLIGHT..... CONTROLS RPL-BY 1680-673-2047										87	
P	O		1680-673-2047	S1640-61470-4	<78286> .ROD ASSEMBLY RPLS--..... 1560-305-1662, A ATTACHING PARTS		EA		1	*	*	2		*	87	46
			5306-206-6370	NAS464-4-18	<80205> .BOLT,SHEAR.....		EA		2	*	*	*		*	87	47
			5310-187-2354	AN960PD416	<88044> .WASHER,FLAT.....		HD		2	*	*	*		*	87	
			5310-184-9001	AN960PD416L	<88044> .WASHER,FLAT.....		HD		4	*	*	*		*	87	
			5310-176-8108	AN320-4	<88044> .NUT,SLOTTED,HEXAGON.....		HD		2	*	*	*		*	87	
			5315-234-1856	MS24665-155	<96906> .PIN,COTTER.....		HD		2	*	*	*		*	87	
					---*---											
			5310-167-1300	AN316-6R	<88044> ..NUT,PLAIN,HEXAGON.....		HD		1	*	*	*		*	87	48
P	O		3110-516-5763	REP4M6FS210	<21335> ..BEARING,BALL,ROD END..... OBSLTS 3110-839-3976		EA		1	*	*	*		REF	87	49
X1				S1640-61311-2	<78286> ..ROD END ASSEMBLY..... RPLS-- 1560-554-1072		EA		1						87	50
				S1640-61190	<78286> .CANCELLER INSTALLATION.....				1						87	
P	F		1560-707-7806	S1640-61191	<78286> ..LINK..... ATTACHING PARTS		EA		1	*	*	*		*	87	52
			5315-064-2701	MS20392-3C37	<96906> ..PIN.....		EA		1	*	*	*		*	87	53
			5310-167-0753	AN960PD10L	<88044> ..WASHER,FLAT.....		HD		1	*	*	*		*	87	
			5315-234-1856	MS24665-155	<96906> ..PIN,COTTER.....		HD		1	*	*	*		*	87	
			5315-080-0170	MS20392-2C9	<96906> ..PIN,STRAIGHT,HEADED.....		EA		1	*	*	*		*	87	54
			5310-167-0753	AN960PD10L	<88044> ..WASHER,FLAT.....		HD		1	*	*	*		*	87	
					---*---											
P	F		1560-706-4486	S1640-61687	<78286> ..ARM..... ATTACHING PARTS		EA		1	*	2	2		*	87	55
			5305-174-0702	AN500A4-8	<88044> ..SCREW,MACHINE.....		EA		2	*	*	*		*	87	56
			5310-550-5009	MS15795-704	<96906> ..WASHER,FLAT.....		HD		2	*	*	*		*	87	
					---*---											
				S1640-61686	<78286> .CANCELLER INSTALLATION.....				1						87	
P	F		1560-787-2435	S1640-61689	<78286> ..LINK,FLIGHT CONTROL..... ATTACHING PARTS		EA		1	*	*	2		*	87	57
			5315-080-0170	MS20392-2C9	<96906> ..PIN,STRAIGHT,HEADED.....		EA		1	*	*	*		*	87	58
			5310-167-0753	AN960PD10L	<88044> ..WASHER,FLAT.....		HD		2	*	*	*		*	87	
			5315-234-1856	MS24665-155	<96906> ..PIN,COTTER.....		HD		1	*	*	*		*	87	
					---*---											
P	F		5310-811-7706	S1640-61688	<78286> ..WASHER,SHOULDERED.....		EA		1	4	9	18		*	87	59
P	F		1560-706-4486	S1640-61687	<78286> ..ARM..... ATTACHING PARTS		EA		1	*	REF	REF		REF	87	60
			5305-174-0702	AN500A4-8	<88044> ..SCREW,MACHINE.....		EA		2	*	*	*		*	87	61

(1) SOURCE, MAINT AND REC CODE (a) SOURCE CODE	(b) MAINT LEVEL	(c) REC CODE	(2) FEDERAL STOCK NUMBER	REFERENCE NUMBER		(3) DESCRIPTION	MODELS USABLE ON CH-34C	(4) UNIT OF ISSUE	(5) QTY INC IN UNIT PACK	(6) QTY INC IN UNIT	(7) 30-DAY DS GS MAINT ALW (a) 1-20	(b) 21-50	(c) 51-100	(8) 1-YR ALW PER 100 EQUIP CNTGCY	(9) DEPOT MAINT ALW PER 100 EQUIP	(10) ILLUSTRATION (a) FIG NO	(b) ITEM NO
			5310-550-5009	MS15795-704	<96906>	..WASHER,FLAT.....		HD		2	*	*	*		*	87	
						---*---											
				S1640-61166-1	<78286>	.FORCE GRADIENT.....				1						87	62
						INSTALLATION SEE FIG.90											
						FOR BREAKDOWN											
				S1640-61124	<78286>	.SOCKET AND YOKE.....				1						87	63
						INSTALLATION SEE FIG.88											
						FOR BREAKDOWN											
			1560-326-3516	S1640-61153-3	<78286>	.ROD ASSEMBLY RPL-BY.....										87	
						1560-633-4395											
P	O		1560-633-4395	S1640-61153-6	<78286>	.ROD ASSEMBLY. RPLS--.....		EA		1	*	*	*		*	87	64
						1560-326-3516											
						ATTACHING PARTS											
			5306-206-6370	NAS464-4-18	<80205>	.BOLT,SHEAR.....		EA		2	*	*	*		*	87	65
			5310-187-2354	AN960PD416	<88044>	.WASHER,FLAT.....		HD		2	*	*	*		*	87	
			5310-184-9001	AN960PD416L	<88044>	.WASHER,FLAT.....		HD		4	*	*	*		*	87	
			5310-176-8108	AN320-4	<88044>	.NUT,SLOTTED,HEXAGON.....		HD		2	*	*	*		*	87	
			5315-234-1856	MS24665-155	<96906>	.PIN,COTTER.....		HD		2	*	*	*		*	87	
						---*---											
			5310-167-1300	AN316-6R	<88044>	..NUT,PLAIN,HEXAGON.....		HD		1	*	*	*		*	87	66
P	O		3110-516-5763	REP4M6FS210	<21335>	..BEARING,BALL,ROD END.....		EA		1	*	*	*		REF	87	67
						OBSLTS 3110-839-3976											
X1				S1640-61311-2	<78286>	..ROD END ASSEMBLY.....		EA		1						87	68
						RPLS-- 1560-554-1072											
			1560-326-3513	S1640-61151-1	<78286>	.ROD ASSEMBLY RPL-BY.....										87	
						1560-633-4392											
P	O		1560-633-4392	S1640-61151-2	<78286>	.ROD ASSEMBLY RPLS--.....		EA		1	*	*	2		*	87	70
						1560-326-3513											
						ATTACHING PARTS											
			5306-206-6370	NAS464-4-18	<80205>	.BOLT,SHEAR.....		EA		2	*	*	*		*	87	71
			5310-187-2354	AN960PD416	<88044>	.WASHER,FLAT.....		HD		2	*	*	*		*	87	
			5310-184-9001	AN960PD416L	<88044>	.WASHER,FLAT.....		HD		4	*	*	*		*	87	
			5310-176-8108	AN320-4	<88044>	.NUT,SLOTTED,HEXAGON.....		HD		2	*	*	*		*	87	
			5315-234-1856	MS24665-155	<96906>	.PIN,COTTER.....		HD		2	*	*	*		*	87	
						---*---											
			5310-167-1300	AN316-6R	<88044>	..NUT,PLAIN,HEXAGON.....		HD		1	*	*	*		*	87	72
P	O		3110-516-5763	REP4M6FS210	<21335>	..BEARING,BALL,ROD END.....		EA		1	*	*	*		REF	87	73
						OBSLTS 3110-839-3976											
X1				S1640-61311-2	<78286>	..ROD END ASSEMBLY.....		EA		1						87	74
						RPLS-- 1560-554-1072											
				S1640-61242-1	<78286>	.COVER INSTALLATION,SERVO....				1						87	
						AND MIXER											
P	O		1560-586-6759	S1640-61244-4	<78286>	..PANEL ASSEMBLY,SERVO AND...		EA		1	*	*	*		*	87	76
						MIXER											
P	O		1560-575-6471	S1640-61244-1	<78286>	..PANEL ASSEMBLY,FLIGHT.....		EA		1	*	*	*		*	87	79
						CONTROLS											
P	O		1560-586-6760	S1640-61246	<78286>	..PANEL ASSEMBLY,SERVO AND...		EA		1	*	*	*		*	87	80
						MIXTURE											
P	F		1560-586-6758	S1640-61244-3	<78286>	..PANEL ASSEMBLY,SERVO AND...		EA		1	*	*	*		*	87	81
						MIXER											
						ATTACHING PARTS											
			5306-182-2057	AN3H4A	<88044>	..BOLT,MACHINE.....		HD		4	*	*	*		*	87	82

(1) SOURCE, MAINT AND REC CODE (a) SOURCE CODE	(b) MAINT LEVEL	(c) REC CODE	(2) FEDERAL STOCK NUMBER	REFERENCE NUMBER		(3) DESCRIPTION	MODELS USABLE ON CH-34C	(4) UNIT OF ISSUE	(5) QTY INC IN UNIT PACK	(6) QTY INC IN UNIT	(7) 30-DAY DS CS MAINT ALW (a) -20	(b) 21-50	(c) 51-100	(8) 1-YR ALW PER 100 EQUIP CNTGCY	(9) DEPOT MAINT ALW PER 100 EQUIP	(10) ILLUSTRATION (a) FIG NO	(b) ITEM NO
			5310-183-4406	AN960PD10	<88044>	..WASHER,FLAT.....		HD		4	*	*	*		*	87	
						---*---											
			1560-586-6757	S1640-61244-2	<78286>	..PANEL ASSEMBLY-RH RPL-BY..										87	
						1560-070-2695											
P	O		1560-070-2695	S1640-61244-17	<78286>	..PANEL ASSEMBLY,SERVO-RH....		EA		1	*	*	*		*	87	83
						RPLS-- 1560-586-6757											
						ATTACHING PARTS											
			5306-182-2058	AN3H5A	<88044>	..BOLT,MACHINE.....		EA		1	*	*	*		*	87	84
			5310-183-4406	AN960PD10	<88044>	..WASHER,FLAT.....		HD		1	*	*	*		*	87	
			5306-182-2057	AN3H4A	<88044>	..BOLT,MACHINE.....		HD		6	*	*	*		*	87	85
			5310-183-4406	AN960PD10	<88044>	..WASHER,FLAT.....		HD		6	*	*	*		*	87	
						---*---											
MF	F			S1640-61244-13	<78286>	...CLIP.....		EA		1						87	86
						MAKEFR											
						AR 9535-554-1415 AL ALLY SH											
				S1640-61243	<78286>	.COVER INSTALLATION,SERVO....				1						87	
						AND MIXER											
AF	F			S1640-61243-1	<78286>	..COVER ASSEMBLY.....		EA		1						87	90
						ATTACHING PARTS											
			5306-281-8936	AN3DDH4A	<88044>	..BOLT,MACHINE.....		EA		1	*	*	*		*	87	91
			5310-183-4406	AN960PD10	<88044>	..WASHER,FLAT.....		HD		2	*	*	*		*	87	
			5310-905-3081	MS21083D3	<96906>	..NUT,SELF-LOCKING,HEXAGON...				1	*	*	*		*	87	
			5306-559-8134	AN3DDH5A	<88044>	..BOLT,MACHINE.....		EA		1	*	*	*		*	87	92
			5310-183-4406	AN960PD10	<88044>	..WASHER,FLAT.....		HD		2	*	*	*		*	87	
			5310-905-3081	MS21083D3	<96906>	..NUT,SELF-LOCKING,HEXAGON...		EA		1	*	*	*		*	87	
						---*---											
P	O		1560-589-4273	S1640-61243-2	<78286>	...PANEL ASSEMBLY,FLIGHT.....		EA		1	*	2	2		*	87	93
						CONTROLS-LH											
P	O		1560-340-1881	S1640-61243-3	<78286>	...PANEL ASSEMBLY,FLIGHT.....		EA		1	*	*	2		*	87	94
						CONTROLS-RH											
P	F		5325-505-4798	212-12	<71286>	....RECEPTACLE.....		EA		1					REF	87	95
P	F		5325-505-4798	212-12	<71286>	....RECEPTACLE,TURNLOCK.....		EA		1	*	*	*		REF	87	
						FASTENER											
X1				2600-2	<71286>	....STUD ASSEMBLY.....		EA		1						87	
				S1640-61245-1	<78286>	.MIXER AND SERVO.....				1						87	97
						INSTALLATION SEE FIG.91											
						FOR BREAKDOWN											
			1560-332-3563	S1640-61266-3	<78286>	.ROD ASSEMBLY RPL-BY.....										87	
						1560-633-4396											
P	F		1560-633-4396	S1640-61266-7	<78286>	.ROD ASSEMBLY RPLS--.....		EA		1	*	*	*		*	87	98
						1560-332-3563											
						ATTACHING PARTS											
			5306-206-6370	NAS464-4-18	<80205>	.BOLT,SHEAR.....		EA		2	*	*	*		*	87	99
			5310-187-2354	AN960PD416	<88044>	.WASHER,FLAT.....		HD		2	*	*	*		*	87	
			5310-184-9001	AN960PD416L	<88044>	.WASHER,FLAT.....		HD		4	*	*	*		*	87	
			5310-176-8108	AN320-4	<88044>	.NUT,SLOTTED,HEXAGON.....		HD		2	*	*	*		*	87	
			5315-234-1856	MS24665-155	<96906>	.PIN,COTTER.....		HD		2	*	*	*		*	87	
						---*---											
			5310-167-1300	AN316-6R	<88044>	..NUT,PLAIN,HEXAGON.....		HD		1	*	*	*		*	87	100
P	F		3110-516-5763	REP4M6FS210	<21335>	..BEARING,BALL,ROD END.....		EA		1	*	*	*		REF	87	101
						OBSLTS 3110-839-3976											
X1				S1640-61311-2	<78786>	..BEARING,BALL,ROD END.....		EA		1						87	102

(1) SOURCE, MAINT AND REC CODE (a) SOURCE CODE	(b) MAINT LEVEL	(c) REC CODE	(2) FEDERAL STOCK NUMBER	REFERENCE NUMBER		(3) DESCRIPTION	MODELS USABLE ON CH-34C	(4) UNIT OF ISSUE	(5) QTY INC IN UNIT PACK	(6) QTY INC IN UNIT	(7) 30-DAY DS GS MAINT ALW (a) 1-20	(b) 21-50	(c) 51-100	(8) 1-YR ALW PER 100 EQUIP CNTGCY	(9) DEPOT MAINT ALW PER 100 EQUIP	(10) ILLUSTRATION (a) FIG NO	(b) ITEM NO
						CONTINUED										87	102
						RPLS-- 1560-554-1072											
X1				S1650-61311-3	<78286>	..BEARING,BALL,ROD.....		EA		1						87	
				S1640-61293	<78286>	.BELL CRANK INSTALLATION.....				1						87	
			1560-340-1105	S1640-61300	<78286>	..SUPPORT ASSEMBLY RPL-BY...										87	
						1560-591-6598											
P	F		1560-591-6598	S1640-61300-3	<78286>	..SUPPORT ASSEMBLY RPLS--...		EA		1	*	*	*		*	87	104
						1560-340-1105											
						ATTACHING PARTS											
			5306-182-2060	AN3H7A	<88044>	..BOLT,MACHINE.....		HD		2	*	*	*		*	87	105
			5310-183-4406	AN960PD10	<88044>	..WASHER,FLAT.....		HD		4	*	*	*		*	87	
			5310-877-5797	MS21044N3	<96906>	..NUT,SELF-LOCKING,HEXAGON...		EA		2	*	*	*		*	87	
			5306-182-1963	AN4H15A	<88044>	..BOLT,MACHINE.....		HD		2	*	*	*		*	87	106
			5310-187-2354	AN960PD416	<88044>	..WASHER,FLAT.....		HD		4	*	*	*		*	87	
			5310-877-5796	MS21044N4	<96906>	..NUT,SELF-LOCKING,HEXAGON...		EA		2	*	*	*		*	87	
			5306-639-2765	NAS464-5-55	<80205>	..BOLT,SHEAR.....		EA		1	*	*	*		*	87	107
			5310-184-8980	AN960PD516L	<88044>	..WASHER,FLAT.....		HD		2	*	*	*		*	87	
			5310-088-0553	MS21044N5	<96906>	..NUT,SELF-LOCKING,HEXAGON...		HD		1	*	*	*		*	87	
						---*---											
P	F		1560-558-7573	S1640-61285	<78286>	..SPACER,PLATE.....		EA		2	*	2	2		*	87	108
P	F		1560-334-6373	S1640-61274	<78286>	..ROD ASSEMBLY,FLIGHT.....		EA		1	*	*	*		*	87	109
						CONTROLS											
						ATTACHING PARTS											
P	F		1560-586-6762	S1640-61275	<78286>	...LINK,BRACKET SUPPORTING...		EA		1	*	*	*		*	87	
X1				S1640-61295	<78286>	...ROD END,FLIGHT CONTROLS...		EA		1						87	
			5310-167-1300	AN316-6R	<88044>	...NUT,PLAIN,HEXAGON.....		HD		1	*	*	*		*	87	
			5306-182-1958	AN4H10A	<88044>	..BOLT,MACHINE.....		HD		1	*	*	*		*	87	110
			5310-187-2354	AN960PD416	<88044>	..WASHER,FLAT.....		HD		2	*	*	*		*	87	
			5310-877-5796	MS21044N4	<96906>	..NUT,SELF-LOCKING,HEXAGON...		EA		1	*	*	*		*	87	
			5306-292-8530	NAS464-5A59	<80205>	..BOLT,SHEAR.....		EA		1	*	*	*		*	87	111
			5310-187-2399	AN960PD516	<88044>	..WASHER,FLAT.....		HD		2	*	*	*		*	87	
			5310-660-3381	MS21083N5	<96906>	..NUT,SELF-LOCKING,HEXAGON...		EA		1	*	*	*		*	87	
						---*---											
			1560-332-3561	S1640-61266-1	<78286>	..ROD ASSEMBLY RPL-BY.....										87	
						1560-563-9956											
P	F		1560-563-9956	S1640-61157-9	<78286>	..ROD ASSEMBLY,FLIGHT.....		EA		1	*	*	2		*	87	112
						CONTROLS RPLS--											
						1560-332-3561											
						ATTACHING PARTS											
			5306-207-2321	NAS464P4A18	<80205>	..BOLT,SHEAR.....		EA		2	*	*	*		*	87	113
			5310-187-2354	AN960PD416	<88044>	..WASHER,FLAT.....		HD		4	*	*	*		*	87	
			5310-543-4443	MS20364-428A	<96906>	..NUT,SELF-LOCKING,HEXAGON...		HD		2	*	*	*		*	87	
						---*---											
			5310-167-1300	AN316-6R	<88044>	...NUT,PLAIN,HEXAGON.....		HD		1	*	*	*		*	87	114
P	F		3110-516-5763	REP4M6FS210	<21335>	..BEARING,BALL,ROD END.....		EA		1	*	*	*		REF	87	115
						OBSLTS 3110-839-3976											
X1				S1640-61311-2	<78286>	...ROD END ASSEMBLY.....		EA		1						87	116
						RPLS-- 1560-554-1072											
			1615-305-4183	S1640-61301	<78286>	..BELLCRANK ASSEMBLY.....										87	
						RPL-BY 1560-613-0959											
P	F		1615-613-0959	S1640-61301-3	<78286>	..BELLCRANK ASSEMBLY.....		EA		1	*	2	2		*	87	118
						RPLS-- 1560-305-4183,											

(1) SOURCE, MAINT AND REC CODE (a) SOURCE CODE	(b) MAINT LEVEL	(c) REC CODE	(2) FEDERAL STOCK NUMBER	REFERENCE NUMBER		(3) DESCRIPTION	MODELS USABLE ON CH-34C	(4) UNIT OF ISSUE	(5) QTY INC IN UNIT PACK	(6) QTY INC IN UNIT	(7) 30-DAY DS/GS MAINT ALW (a) 1-20	(b) 21-50	(c) 51-100	(8) 1-YR ALW PER 100 EQUIP CNTGCY	(9) DEPOT MAINT ALW PER 100 EQUIP	(10) ILLUSTRATION (a) FIG NO	(b) ITEM NO
						CONTINUED										87	118
						1560-334-6371											
P	F		3110-142-4464	MS20201KP5A	<96906>	...BEARING,BALL,AIRFRAME.....		EA		2	*	*	*		REF	87	119
P	F		1560-567-1115	S1640-61286	<78286>	...SPACER ASSEMBLY,BEARING,..		EA		1	*	*	*		*	87	120
						AZIMUTH											
			1560-332-3559	S1640-61254	<78286>	..BELLCRANK ASSEMBLY.....										87	
						RPL-BY 1560-591-6599											
P	F		1560-591-6599	S1640-61254-1	<78286>	..BELLCRANK ASSEMBLY,.....		EA		1	*	*	2		*	87	121
						AZIMUTH CONTROLS RPLS--											
						1560-332-3559											
			1560-332-3560	S1640-61256	<78286>	..BELLCRANK ASSEMBLY.....		EA								87	
P	F		1560-591-6600	S1640-61256-1	<78286>	..BELLCRANK ASSEMBLY,.....		EA		1	*	*	2		*	87	122
						AZIMUTH CONTROLS											
			5306-638-5757	AN4DDH11A	<88044>	..BOLT,MACHINE.....		EA		10	*	*	*		*	87	123
			5310-187-2354	AN960PD416	<88044>	..WASHER,FLAT.....		HD		20	*	*	*		*	87	
			5310-877-5796	MS21044N4	<96906>	..NUT,SELF-LOCKING,HEXAGON...		EA		10	*	*	*		*	87	
			1560-335-8833	S1640-61229-4	<78286>	.ROD ASSEMBLY.....		EA			*	*	*			87	
P	O		1560-659-9234	S1640-61229-5	<78286>	.ROD ASSEMBLY.....		EA		1	*	*	2		*	87	124
						ATTACHING PARTS											
			5306-206-6370	NAS464-4-18	<80205>	.BOLT,SHEAR.....		EA		2	*	*	*		*	87	125
			5310-187-2354	AN960PD416	<88044>	.WASHER,FLAT.....		HD		2	*	*	*		*	87	
			5310-184-9001	AN960PD416L	<88044>	.WASHER,FLAT.....		HD		4	*	*	*		*	87	
			5310-176-8108	AN320-4	<88044>	.NUT,SLOTTED,HEXAGON.....		HD		2	*	*	*		*	87	
			5315-234-1856	MS24665-155	<96906>	.PIN,COTTER.....		HD		2	*	*	*		*	87	
						---*---											
			5310-167-1300	AN316-6R	<88044>	..NUT,PLAIN,HEXAGON.....		HD		2	*	*	*		*	87	126
P	O		3110-516-5763	REP4M6FS210	<21335>	..BEARING,BALL,ROD END.....		EA		2	*	*	*		REF	87	127
						OBSLTS 3110-839-3976											
			1560-332-3566	S1640-61266-6	<78286>	.ROD ASSEMBLY RPL-BY.....										87	
						1560-631-5754											
P	F		1560-631-5754	S1640-61266-8	<78286>	.ROD ASSEMBLY RPLS--.....		EA		1	*	2	2		*	87	128
						1560-332-3566											
						ATTACHING PARTS											
			5306-206-6370	NAS464-4-18	<80205>	.BOLT,SHEAR.....		EA		2	*	*	*		*	87	129
			5310-187-2354	AN960PD416	<88044>	.WASHER,FLAT.....		HD		2	*	*	*		*	87	
			5310-184-9001	AN960PD416L	<88044>	.WASHER,FLAT.....		HD		4	*	*	*		*	87	
			5310-176-8108	AN320-4	<88044>	.NUT,SLOTTED,HEXAGON.....		HD		2	*	*	*		*	87	
			5315-234-1856	MS24665-155	<96906>	.PIN,COTTER.....		HD		2	*	*	*		*	87	
						---*---											
			5310-167-1300	AN316-6R	<88044>	..NUT,PLAIN,HEXAGON.....		HD		1	*	*	*		*	87	130
P	F		3110-516-5763	REP4M6FS210	<21335>	..BEARING,BALL,ROD END.....		EA		1	*	*	*		REF	87	131
						OBSLTS 3110-839-3976											
X1				S1640-61311-2	<78286>	..ROD END ASSEMBLY.....		EA		1						87	132
						RPLS-- 1560-554-1072											
			1560-332-3564	S1640-61266-4	<78286>	.ROD ASSEMBLY.....		EA			*	*	*			87	
P	F		1560-563-9951	S1640-61157-10	<78286>	.ROD ASSEMBLY,FLIGHT.....		EA		1	*	2	2		*	87	134
						CONTROLS											
						ATTACHING PARTS											
			5306-206-6370	NAS464-4-18	<80205>	.BOLT,SHEAR.....		EA		2	*	*	*		*	87	135
			5310-187-2354	AN960PD416	<88044>	.WASHER,FLAT.....		HD		2	*	*	*		*	87	
			5310-184-9001	AN960PD416L	<88044>	.WASHER,FLAT.....		HD		4	*	*	*		*	87	
			5310-176-8108	AN320-4	<88044>	.NUT,SLOTTED,HEXAGON.....		HD		2	*	*	*		*	87	

(1) SOURCE, MAINT AND REC CODE (a) SOURCE CODE	(b) MAINT LEVEL	(c) REC CODE	(2) FEDERAL STOCK NUMBER	REFERENCE NUMBER		(3) DESCRIPTION	MODELS USABLE ON CH-34C	(4) UNIT OF ISSUE	(5) QTY INC IN UNIT PACK	(6) QTY INC IN UNIT	(7) 30-DAY DS GS MAINT ALW (a) 1-20	(b) 21-50	(c) 51-100	(8) 1-YR ALW PER 100 EQUIP CNTGCY	(9) DEPOT MAINT ALW PER 100 EQUIP	(10) ILLUSTRATION (a) FIG NO	(b) ITEM NO
			5315-234-1856	MS24665-155	<96906>	.PIN,COTTER.....		HD		2	*	*	*		*	87	
						---*---											
			5310-167-1300	AN316-6R	<88044>	..NUT,PLAIN,HEXAGON.....		HD		1	*	*	*		*	87	136
P	F		3110-516-5763	REP4M6FS210	<21335>	..BEARING,BALL,ROD END.....		EA		1	*	*	*		REF	87	137
						OBSLTS 3110-839-3976											
X1				S1640-61311-2	<78286>	..ROD END ASSEMBLY.....		EA		1						87	138
						RPLS-- 1560-554-1072											
X1				S1640-61472	<78286>	..ADAPTER,COLLECTIVE PITCH...		EA		1						87	140
						WHEN EXHTD RQTN NHA											
						1560-563-9951											
			1560-332-3562	S1640-61266-2	<78286>	.ROD ASSEMBLY RPL-BY.....										87	
						1560-563-9955											
P	F		1560-563-9955	S1640-61157-8	<78286>	.ROD ASSEMBLY,FLIGHT.....		EA		1	*	*	2	10	*	87	142
						CONTROLS RPLS--											
						1560-332-3562											
						ATTACHING PARTS											
			5306-206-6370	NAS464-4-18	<80205>	.BOLT,SHEAR.....		EA		2	*	*	*		*	87	143
			5310-187-2354	AN960PD416	<88044>	.WASHER,FLAT.....		HD		2	*	*	*		*	87	
			5310-184-9001	AN960PD416L	<88044>	.WASHER,FLAT.....		HD		4	*	*	*		*	87	
			5310-176-8108	AN320-4	<88044>	.NUT,SLOTTED,HEXAGON.....		HD		2	*	*	*		*	87	
			5315-234-1856	MS24665-155	<96906>	.PIN,COTTER.....		HD		2	*	*	*		*	87	
						---*---											
			5310-167-1300	AN316-6R	<88044>	..NUT,PLAIN,HEXAGON.....		HD		1	*	*	*		*	87	144
P	F		3110-516-5763	REP4M6FS210	<21335>	..BEARING,BALL,ROD END.....		EA		1	*	*	*		REF	87	145
						OBSLTS 3110-839-3976											
X1				S1640-61311-2	<78286>	..ROD END ASSEMBLY.....		EA		1						87	146
						RPLS-- 1560-554-1072											
X1				S1640-61157-28	<78286>	..TUBE.....		EA		1						87	
				S1640-61282	<78286>	.BELLCRANK INSTALLATION.....				1						87	
			1560-332-3567	S1640-61272	<78286>	..SUPPORT ASSEMBLY RPL-BY...										87	
						1560-591-6594											
P	F		1560-591-6594	S1640-61272-1	<78286>	..SUPPORT ASSEMBLY RPLS--...		EA		1	*	*	*		*	87	148
						1560-332-3567											
						ATTACHING PARTS											
			5310-187-2354	AN960PD416	<88044>	..WASHER,FLAT.....		HD		4	*	*	*		*	87	
			5310-877-5796	MS21044N4	<96906>	..NUT,SELF-LOCKING,HEXAGON...		EA		4	*	*	*		*	87	149
			5306-141-4514	AN174H25A	<88044>	..BOLT,MACHINE.....		EA		1	*	*	*		*	87	150
			5310-187-2354	AN960PD416	<88044>	..WASHER,FLAT.....		HD		1	*	*	*		*	87	
						---*---											
			1560-334-6372	S1640-61270	<78286>	..BELLCRANK ASSEMBLY.....										87	
						RPL-BY 1560-591-6593											
P	F		1560-591-6593	S1640-61270-1	<78286>	..BELLCRANK ASSEMBLY.....		EA		1	*	*	2		*	87	151
						RPLS-- 1560-334-6372											
						ATTACHING PARTS											
			5306-207-0980	NAS464-5-25	<80205>	..BOLT,SHEAR.....		EA		1	*	*	*		*	87	152
			5310-187-2399	AN960PD516	<88044>	..WASHER,FLAT.....		HD		2	*	*	*		*	87	
			5310-088-0553	MS21044N5	<96906>	..NUT,SELF-LOCKING,HEXAGON...		HD		1	*	*	*		*	87	
						---*---											
			1560-332-3565	S1640-61266-5	<78286>	.ROD ASSEMBLY,FLIGHT.....										87	
						CONTROLS RPL-BY											
						1560-563-9954											
P	F		1560-563-9954	S1640-61157-7	<78286>	.ROD ASSEMBLY,FLIGHT.....		EA		1	*	2	2		*	87	153

(1) SOURCE, MAINT AND REC CODE (a) SOURCE CODE	(b) MAINT CATEGORY	(c) REC LEVEL CODE	(2) FEDERAL STOCK NUMBER	REFERENCE NUMBER	(3) DESCRIPTION	MODELS USABLE ON CH-34C	(4) UNIT OF ISSUE	(5) QTY INC IN UNIT PACK	(6) QTY INC IN UNIT	(7) 30-DAY DS GS MAINT ALW (a) 1-20	(b) 21-50	(c) 51-100	(8) 1-YR ALW PER 100 EQUIP CNTGCY	(9) DEPOT MAINT ALW PER 100 EQUIP	(10) ILLUSTRATION (a) FIG NO	(b) ITEM NO
					CONTINUED										87	153
					CONTROLS RPLS--											
					1560-332-3565											
					ATTACHING PARTS											
			5306-206-6370	NAS464-4-18 <80205>	.BOLT,SHEAR.....		EA		2	*	*	*		*	87	154
			5310-187-2354	AN960PD416 <88044>	.WASHER,FLAT.....		HD		2	*	*	*		*	87	
			5310-184-9001	AN960PD416L <88044>	.WASHER,FLAT.....		HD		4	*	*	*		*	87	
			5310-176-8108	AN320-4 <88044>	.NUT,SLOTTED,HEXAGON.....		HD		2	*	*	*		*	87	
			5315-234-1856	MS24665-155 <96906>	.PIN,COTTER.....		HD		2	*	*	*		*	87	
					---*---											
			5310-167-1300	AN316-6R <88044>	..NUT,PLAIN,HEXAGON.....		HD		1	*	*	*		*	87	155
P	F		3110-516-5763	REP4M6FS210 <21335>	..BEARING,BALL,ROD END.....		EA		1	*	*	*		REF	87	156
					OBSLTS 3110-839-3976											
X1				S1640-61311-2 <78286>	..ROD END ASSEMBLY.....		EA		1						87	157
					ATTACHING PARTS											
				MS20470AD5 <96906>	..RIVET.....		EA		3						87	158
					---*---											
				S1640-61263 <78286>	.BELLCRANK INSTALLATION.....				1						87	
			1560-332-3558	S1640-61252 <78286>	..BELLCRANK ASSEMBLY.....										87	
					RPL-BY 1560-591-6589											
P	F		1560-591-6589	S1640-61252-1 <78286>	..BELLCRANK ASSEMBLY.....		EA		1	*	*	*		*	87	159
					AZIMUTH CONTROLS											
					RPLS-- 1560-332-3558											
					ATTACHING PARTS											
			5306-582-6395	NAS464P6A28 <80205>	..BOLT,SHEAR.....		EA		1	*	*	*			87	160
			5310-187-2400	AN960PD616 <88044>	..WASHER,FLAT.....		HD		2	*	*	*		*	87	
			5310-275-2016	MS20364-624A <96906>	..NUT,SELF-LOCKING,HEXAGON...		HD		1	*	*	*		*	87	
					---*---											
X1				DW6 <21335>	...BEARING,BALL,AIRFRAME.....		EA		1						87	
					WHEN EXHTD RQTN NHA											
					1560-591-6589											
			1560-340-1066	S1640-61260 <78286>	..SUPPORT ASSEMBLY RPL-BY...										87	
					1560-591-6590											
P	F		1560-591-6590	S1640-61260-1 <78286>	..SUPPORT ASSEMBLY RPLS--...		EA		1	*	*	*		*	87	161
					1560-340-1066											
					ATTACHING PARTS											
			5310-187-2354	AN960PD416 <88044>	..WASHER,FLAT.....		HD		4	*	*	*		*	87	
			5310-877-5796	MS21044N4 <96906>	..NUT,SELF-LOCKING,HEXAGON...		EA		4	*	*	*		*	87	162
					---*---											
				S1640-61294 <78286>	.BELLCRANK INSTALLATION.....				1						87	
			1560-310-5371	S1640-61283-1 <78286>	..BELLCRANK ASSEMBLY.....		EA								87	
					OBSLTS 1560-591-6601											
			1560-328-4842	S1640-61283-2 <78286>	..BELLCRANK ASSEMBLY.....										87	
					RPL-BY 1560-591-6601											
P	F		1560-591-6601	S1640-61283-3 <78286>	..BELLCRANK ASSEMBLY.....		EA		1	*	*	2		*	87	163
					RPLS--1560-328-4842											
					OBSLTS 1560-310-5371											
					ATTACHING PARTS											
			5306-292-8555	NAS464-5-24 <80205>	..BOLT,MACHINE.....		EA		1	*	*	*		*	87	164
			5310-187-2399	AN960PD516 <88044>	..WASHER,FLAT.....		HD		2	*	*	*		*	87	
			5310-660-3381	MS21083N5 <96906>	..NUT,SELF-LOCKING,HEXAGON...				1	*	*	*		*	87	
					---*---											

(1) SOURCE, MAINT AND RFC CODE (a) SOURCE CODE	(b) MAINT LEVEL	(c) RFC CODE	(2) FEDERAL STOCK NUMBER	(3) DESCRIPTION REFERENCE NUMBER			MODELS USABLE ON CH-34C	(4) UNIT OF ISSUE	(5) QTY INC IN UNIT PACK	(6) QTY INC IN UNIT	(7) 30-DAY DS. GS MAINT ALW (a) 1-20	(b) 21-50	(c) 51-100	(8) 1-YR ALW PER 100 EQUIP CNTGCY	(9) DEPOT MAINT ALW PER 100 EQUIP	(10) ILLUSTRATION (a) FIG NO	(b) ITEM NO
			1560-334-6376	S1640-61291	<78286>	..SUPPORT ASSEMBLY RPL-BY... 1560-606-7521										87	
P	F		1560-606-7521	S1640-61291-1	<78286>	..SUPPORT ASSEMBLY RPLS--... 1560-334-6376 ATTACHING PARTS		EA		1	*	*	*		*	87	165
			5310-187-2354	AN960PD416	<88044>	..WASHER,FLAT.....		HD		4	*	*	*		*	87	
			5310-877-5796	MS21044N4	<96906>	..NUT,SELF-LOCKING,HEXAGON...		EA		4	*	*	*		*	87	166
						---*---											
				S1640-61262	<78286>	.BELLCRANK INSTALLATION.....				1						87	
			1560-332-3557	S1640-61250	<78286>	..BELLCRANK ASSEMBLY.....		EA								87	
P	F		1560-591-6591	S1640-61250-1	<78286>	..BELLCRANK ASSEMBLY..... ATTACHING PARTS		EA		1	*	*	2		*	87	167
			5306-292-8555	NAS464-5-24	<80205>	..BOLT,MACHINE.....		EA		1	*	*	*		*	87	168
			5310-187-2399	AN960PD516	<88044>	..WASHER,FLAT.....		HD		2	*	*	*		*	87	
			5310-660-3381	MS21083N5	<96906>	..NUT,SELF-LOCKING,HEXAGON...		EA		1	*	*	*		*	87	
						---*---											
			1560-692-2627	S1640-61303	<78286>	..SUPPORT ASSEMBLY RPL-BY... 1560-591-6592										87	
			1560-328-4843	S1640-61303-3	<78286>	..SUPPORT ASSEMBLY RPL-BY... 1560-591-6592										87	
P	F		1560-591-6592	S1640-61303-5	<78286>	..SUPPORT ASSEMBLY,AZIMUTH... CONTROLS RPLS-- 1560-328-4843, 1560-334-6370,& 1560-692-2627 ATTACHING PARTS		EA		1	*	*	*		*	87	169
			5310-187-2354	AN960PD416	<88044>	..WASHER,FLAT.....		HD		4	*	*	*		*	87	
			5310-877-5796	MS21044N4	<96906>	..NUT,SELF-LOCKING,HEXAGON...		EA		4	*	*	*		*	87	170
						---*---											
				S1665-20001	<78286>	.MAIN ROTOR SERVO CONTROLS... INSTALLATION SEE FIG.98 & 99 FOR BREAKDOWN				1						87	171
				S1640-61124	<78286>	SOCKET AND YOKE..... INSTALLATION SEE FIG.87 FOR NHA		EA								88	
			5315-234-1856	MS24665-155	<96906>	.PIN,COTTER.....		HD		2	*	*	*		*	88	1
			1560-326-3506	S1640-61130	<78286>	.ROD ASSEMBLY,FLIGHT..... CONTROLS RPL-BY 1560-657-2912										88	
P	O		1560-657-2912	S1640-61130-1	<78286>	.ROD ASSEMBLY,FLIGHT..... CONTROLS RPLS-- 1560-326-3506 ATTACHING PARTS		EA		2	*	*	2		*	88	2
			5306-206-6370	NAS464-4-18	<80205>	.BOLT,SHEAR.....		EA		1	*	*	*		*	88	3
			5310-187-2354	AN960PD416	<88044>	.WASHER,FLAT.....		HD		2	*	*	*		*	88	
			5310-176-8108	AN320-4	<88044>	.NUT,SLOTTED,HEXAGON.....		HD		1	*	*	*		*	88	

(1) SOURCE MAINT AND REC CODE (a) SOURCE CODE	(b) MAINT CODE	(c) REC CODE	(2) FEDERAL STOCK NUMBER	REFERENCE NUMBER	(3) DESCRIPTION	MODELS USABLE ON CH-34C	(4) UNIT OF ISSUE	(5) QTY INC IN UNIT PACK	(6) QTY INC IN UNIT	(7) 30-DAY DS GS MAINT ALW (a) 1-20	(b) 21-50	(c) 51-100	(8) 1-YR ALW PER 100 EQUIP CNTGCY	(9) DEPOT MAINT ALW PER 100 EQUIP	(10) ILLUSTRATION (a) FIG NO	(b) ITEM NO
			5315-234-1856	MS24665-155 <96906>	.PIN,COTTER.....		HD		1	*	*	*		*	88	
			5306-206-6370	NAS464-4-18 <80205>	.BOLT,SHEAR.....		EA		1	*	*	*		*	88	4
			5310-187-2354	AN960PD416 <88044>	.WASHER,FLAT.....		HD		2	*	*	*		*	88	
			5310-176-8108	AN320-4 <88044>	.NUT,SLOTTED,HEXAGON.....		HD		1	*	*	*		*	88	
			5315-234-1856	MS24665-155 <96906>	.PIN,COTTER.....		HD		1	*	*	*		*	88	
					---*---											
			5310-167-1300	AN316-6R <88044>	..NUT,PLAIN,HEXAGON.....		HD		1	*	*	*		*	88	5
P	O		3110-516-5763	REP4M6FS210 <21335>	..BEARING,BALL,ROD END..... OBSLTS 3110-839-3976		EA		1	*	*	*		REF	88	6
P	O		1560-326-3507	S1640-61132 <78286>	..ROD END ASSEMBLY,AZIMUTH... CONTROL		EA		1	*	*	*		*	88	7
				S1640-61134 <78286>	..NUT,PLAIN,ROUND.....		EA		1						88	
P	F		1560-606-7519	S1640-61150-1 <78286>	.BELL CRANK ASSEMBLY,..... AZIMUTH CONTROL		EA		1	*	*	2		*	88	8
			1560-326-3508	S1640-61136 <78286>	.BELL CRANK ASSEMBLY,..... AZIMUTH CONTROL RPL-BY 1560-606-7516										88	
P	F		1560-606-7516	S1640-61136-1 <78286>	.BELL CRANK,AZIUMTH RPLS--.. 1560-326-3508 ATTACHING PARTS		EA		1	*	*	*		*	88	
			5306-207-1051	NAS464-4-23 <80205>	.BOLT,SHEAR.....		EA		1	*	*	*		*	88	9
			5310-187-2354	AN960PD416 <88044>	.WASHER,FLAT.....		HD		2	*	*	*		*	88	
			5310-176-8108	AN320-4 <88044>	.NUT,SLOTTED,HEXAGON.....		HD		1	*	*	*		*	88	
			5315-234-1856	MS24665-155 <96906>	.PIN,COTTER.....		HD		1	*	*	*		*	88	
					---*---											
AF	F			S1640-61141-1 <78286>	.BELL CRANK AND SUPPORT..... ASSEMBLY,PILOTS ATTACHING PARTS		EA		1						88	10
			5306-182-2062	AN3H11A <88044>	.BOLT,MACHINE.....		HD		2	*	*	*		*	88	11
			5310-183-4406	AN960PD10 <88044>	.WASHER,FLAT.....		HD		4	*	*	*		*	88	
			5310-877-5797	MS21044N3 <96906>	.NUT,SELF-LOCKING,HEXAGON....		EA		2	*	*	*		*	88	
			5306-151-1969	AN23-17 <88044>	.BOLT,CLEVIS.....		EA		2	*	*	*		*	88	12
			5310-183-4406	AN960PD10 <88044>	.WASHER,FLAT.....		HD		4	*	*	*		*	88	
			5310-807-1467	MS21042-3 <96906>	.NUT,SELF-LOCKING,HEXAGON....				2	*	*	*		*	88	
			5306-182-2061	AN3H10A <88044>	.BOLT,MACHINE.....		HD		2	*	*	*		*	88	13
			5310-183-4406	AN960PD10 <88044>	.WASHER,FLAT.....		HD		4	*	*	*		*	88	
			5310-877-5797	MS21044N3 <96906>	.NUT,SELF-LOCKING,HEXAGON....		EA		2	*	*	*		*	88	
			5306-182-2059	AN3H6A <88044>	.BOLT,MACHINE.....		HD		4	*	*	*		*	88	14
			5310-183-4406	AN960PD10 <88044>	.WASHER,FLAT.....		HD		8	*	*	*		*	88	
			5310-877-5797	MS21044N3 <96906>	.NUT,SELF-LOCKING,HEXAGON....		EA		4	*	*	*		*	88	
					---*---											
			5310-316-8956	AN316-4R <88044>	..NUT,PLAIN,HEXAGON.....		HD		2	*	*	*		*	88	15
P	F		5306-639-2003	S14-40-2044 <78286>	..BOLT.....		EA		2	*	2	2		*	88	16
			1560-326-3510	S1640-61142 <78286>	..BELL CRANK ASSEMBLY,..... AZIMUTH CONTROL RPL-BY 1560-606-7517										88	
P	F		1560-606-7517	S1640-61142-1 <78286>	..BELL CRANK ASSEMBLY,..... AZIMUTH CONTROL RPLS-- 1560-326-3510 ATTACHING PARTS		EA		1	*	*	*		*	88	17
			5306-576-1945	AN174H65A <88044>	..BOLT,MACHINE.....		EA		1	*	*	*		*	88	18
			5310-187-2354	AN960PD416 <88044>	..WASHER,FLAT.....		HD		2	*	*	*		*	88	

(1) SOURCE, MAINT AND REC CODE (a) SOURCE CODE	(b) MAINT LEVEL	(c) REC CODE	(2) FEDERAL STOCK NUMBER	REFERENCE NUMBER		(3) DESCRIPTION	MODELS USABLE ON CH-34C	(4) UNIT OF ISSUE	(5) QTY INC IN UNIT PACK	(6) QTY INC IN UNIT	(7) 30-DAY DS GS MAINT ALW (a) 1-20	(b) 21-50	(c) 51-100	(8) 1 YR ALW PER 100 EQUIP CNTGCY	(9) DEPOT MAINT ALW PER 100 EQUIP	(10) ILLUSTRATION (a) FIG NO	(b) ITEM NO
			5310-877-5796	MS21044N4	<96906>	..NUT,SELF-LOCKING,HEXAGON...		EA		1	*	*	*		*	88	
						---*---											
P	F		3110-142-4461	AN200KP4	<88044>	...BEARING,BALL,AIRFRAME.....		EA		2	*	*	*		*	88	19
X1				SS4055-4-472	<78286>	...SPACER,BELL CRANK ASSEMBLY		EA		1						88	20
			1560-326-3511	S1640-61144	<78286>	..SUPPORT ASSEMBLY,PILOTS....										88	
						STICK RPL-BY											
						1560-606-7518											
P	F		1560-606-7518	S1640-61144-1	<78286>	..SUPPORT ASSEMBLY,FLIGHT....		EA		1	*	2	2		*	88	21
						CONTROL RPLS--											
						1560-326-3511											
P	F		1560-591-6707	S1640-61117-1	<78286>	..SUPPORT ASSEMBLY,PILOTS....		EA		1	*	*	*		*	88	22
						STICK RPLS--											
						1560-326-3501											
				S1640-61119-2	<78286>	.PILOTS BELL CRANK.....				1						88	23
						INSTALLATION SEE FIG.89											
						FOR BREAKDOWN											
P	F		1560-509-0633	S1640-61124-1	<78286>	.SHIM,AZIMUTH CONTROL.....		EA		AR	2	2	4		*	88	24
			1560-326-3509	S1640-61138	<78286>	.SUPPORT ASSEMBLY,AZIMUTH....										88	
						CONTROL RPL-BY											
						1560-589-6085											
P	F		1560-589-6085	S1640-61138-1	<78286>	.SUPPORT ASSEMBLY,AZIMUTH....		EA		2	*	*	2		*	88	25
						CONTROL RPLS--											
						1560-326-3509											
						ATTACHING PARTS											
			5306-182-2060	AN3H7A	<88044>	.BOLT,MACHINE.....		HD		4	*	*	*		*	88	26
			5310-183-4406	AN960PD10	<88044>	.WASHER,FLAT.....		HD		8	*	*	*		*	88	
			5310-877-5797	MS21044N3	<96906>	.NUT,SELF-LOCKING,HEXAGON....		EA		4	*	*	*		*	88	
						---*---											
AF	F			S1640-61123	<78286>	.SUPPORT AND YOKE ASSEMBLY...		EA		1						88	27
AF	F			S1640-61125	<78286>	.SOCKET AND YOKE ASSEMBLY,...		EA		1						88	
						CO-PILOTS											
						ATTACHING PARTS											
			5306-182-2058	AN3H5A	<88044>	.BOLT,MACHINE.....		EA		6	*	*	*		*	88	28
			5310-183-4406	AN960PD10	<88044>	.WASHER,FLAT.....		HD		12	*	*	*		*	88	
			5310-877-5797	MS21044N3	<96906>	.NUT,SELF-LOCKING,HEXAGON....		EA		6	*	*	*		*	88	
			5306-182-2059	AN3H6A	<88044>	.BOLT,MACHINE.....		HD		4	*	*	*		*	88	29
			5310-183-4406	AN960PD10	<88044>	.WASHER,FLAT.....		HD		8	*	*	*		*	88	
			5310-877-5797	MS21044N3	<96906>	.NUT,SELF-LOCKING,HEXAGON....		EA		4	*	*	*		*	88	
			5306-182-2059	AN3H6A	<88044>	.BOLT,MACHINE.....		HD		2	*	*	*		*	88	30
			5310-183-4406	AN960PD10	<88044>	.WASHER,FLAT.....		HD		4	*	*	*		*	88	
			5310-877-5797	MS21044N3	<96906>	.NUT,SELF-LOCKING,HEXAGON....		EA		2	*	*	*		*	88	
P	F		1560-509-0633	S1640-61124-1	<78286>	.SHIM,AZIMUTH CONTROL.....		EA		AR	REF	REF	REF		REF	88	31
						---*---											
			1560-326-3500	S1640-61116	<78286>	..SOCKET ASSEMBLY RPL-BY....										88	
						1560-591-6709											
P	F		1560-591-6709	S1640-61116-1	<78286>	..SOCKET ASSEMBLY,CO-PILOTS..		EA		1	*	*	*		*	88	32
						STICK RPLS--											
						1560-326-3500											
						ATTACHING PARTS											
			5306-206-6375	NAS464-4-39	<80205>	..BOLT,SHEAR.....		EA		1	*	*	*		*	88	33
			5310-141-1795	AN960-416	<88044>	..WASHER,FLAT.....		HD		2	*	*	*		*	88	
			5310-176-8108	AN320-4	<88044>	..NUT,SLOTTED,HEXAGON.....		HD		1	*	*	*		*	88	

(1) SOURCE, MAINT AND REC CODE (a) SOURCE CODE	(b) MAINT LEVEL	(c) REC CODE	(2) FEDERAL STOCK NUMBER	REFERENCE NUMBER	(3) DESCRIPTION	MODELS USABLE ON CH-34C	(4) UNIT OF ISSUE	(5) QTY INC IN UNIT PACK	(6) QTY INC IN UNIT	(7) 30-DAY DS/GS MAINT ALW (a) 1-20	(b) 21-50	(c) 51-100	(8) 1-YR ALW PER 100 EQUIP CNTGCY	(9) DEPOT MAINT ALW PER 100 EQUIP	(10) ILLUSTRATION (a) FIG NO	(b) ITEM NO
			5315-234-1856	MS24665-155 <96906>	..PIN,COTTER..... ---*---		HD		1	*	*	*		*	88	
			5315-236-8356	MS24665-370 <96906>	..PIN,COTTER.....		HD		1	*	*	*		*	88	34
P	F		5310-638-1126	S1640-61105 <78286>	..NUT,PLAIN,ROUND.....		EA		1	*	*	*		*	88	35
			3120-542-1202	NAS537-4P17 <80205>	..BUSHING,SLEEVE.....		EA		6	*	*	*		*	88	
P	F		1560-332-3550	S1640-61104 <78286>	..SUPPORT ASSEMBLY,PILOTS.... STICK		EA		2	*	2	2		*	88	36
P	F		1560-332-3549	S1640-61102 <78286>	..SUPPORT ASSEMBLY,PILOTS.... STICK		EA		2	*	*	2		*	88	37
P	F		3110-142-4490	AN202KP37B <88044>	...BEARING.....		EA		4	9	22	44		*	88	
			1560-326-3505	S1640-61128 <78286>	..YOKE ASSEMBLY RPL-BY..... 1560-591-6705										88	
P	F		1560-591-6705	S1640-61128-1 <78286>	..YOKE ASSEMBLY RPLS--..... 1560-326-3505		EA		1	*	*	2		*	88	38
			1560-326-3504	S1640-61126 <78286>	..YOKE ASSEMBLY RPL-BY..... 1560-591-6710										88	
P	F		1560-591-6710	S1640-61126-1 <78286>	..YOKE ASSEMBLY,CO-PILOTS.... STICK RPLS-- 1560-326-3504		EA		1	*	*	*		*	88	
				S1640-61119-2 <78286>	PILOTS BELL CRANK..... INSTALLATION SEE FIG.88 FOR NHA		EA								89	
AF	O	R		S1640-61112-3 <78286>	.BELL CRANK ASSEMBLY,PILOTS.. ATTACHING PARTS		EA		1						89	1
			5306-182-2059	AN3H6A <88044>	.BOLT,MACHINE.....		HD		8	*	*	*		*	89	2
			5310-183-4406	AN960PD10 <88044>	.WASHER,FLAT.....		HD		16	*	*	*		*	89	
			5310-877-5797	MS21044N3 <96906>	.NUT,SELF-LOCKING,HEXAGON.... ---*---		EA		8	*	*	*		*	89	
			5306-576-1941	AN4H60A <88044>	..BOLT,MACHINE.....		EA		1	*	*	*		*	89	3
			5310-187-2354	AN960PD416 <88044>	..WASHER,FLAT.....		HD		2	*	*	*		*	89	
			5310-877-5796	MS21044N4 <96906>	..NUT,SELF-LOCKING,HEXAGON...		EA		1	*	*	*		*	89	
P	F		1560-591-6707	S1640-61117-1 <78286>	..SUPPORT ASSEMBLY,PILOTS.... STICK RPLS-- 1560-326-3501		EA		1	*	*	*		REF	89	4
P	F		1560-591-6708	S1640-61118-1 <78286>	..SUPPORT ASSEMBLY,PILOTS.... STICK USBL EFF 56-4293 & SUBSEQUENT		EA		1	*	*	*		*	89	5
P	F		1560-591-6706	S1640-61147-3 <78286>	..BELL CRANK ASSEMBLY,PILOTS. RPLS-- 1560-340-0936		EA		1	*	*	*		*	89	6
P	F		3110-142-4461	AN200KP4 <88044>	...BEARING,BALL,AIRFRAME.....		EA		2	*	*	*		REF	89	7
P	F		1560-446-2987	SS4059-10-418 <78286>	...SPACER SLEEVE.....		EA		1	*	*	*		*	89	8

(1) SOURCE, MAINT AND REC CODE (a) SOURCE CODE	(b) MAINT LEVEL	(c) REC CODE	(2) FEDERAL STOCK NUMBER	REFERENCE NUMBER	(3) DESCRIPTION	MODELS USABLE ON CH-34C	(4) UNIT OF ISSUE	(5) QTY INC IN UNIT PACK	(6) QTY INC IN UNIT	(7) 30-DAY DS/GS MAINT ALW (a) 1-20	(b) 21-50	(c) 51-100	(8) 1-YR ALW PER 100 EQUIP CNTGCY	(9) DEPOT MAINT ALW PER 100 EQUIP	(10) ILLUSTRATION (a) FIG NO	(b) ITEM NO
				S1640-61166-1 <78286>	FORCE GRADIENT INSTALLATION.. SEE FIG.87 FOR NHA		EA		1						90	
P	F		1560-301-3566	S1640-61183 <78286>	.UNIVERSAL,FORCE GRADIENT.... ATTACHING PARTS		EA		1	*	2	2		*	90	1
			5306-550-3406	AN173H16A <88044>	.BOLT,MACHINE.....		EA		1	*	*	*		*	90	2
			5310-167-0753	AN960PD10L <88044>	.WASHER,FLAT.....		HD		2	*	*	*		*	90	
			5310-877-5797	MS21044N3 <96906>	.NUT,SELF-LOCKING,HEXAGON....		EA		1	*	*	*		*	90	
			5306-292-8276	AN173H11A <88044>	.BOLT,MACHINE.....		EA		1	*	*	*		*	90	3
			5310-167-0753	AN960PD10L <88044>	.WASHER,FLAT.....		HD		2	*	*	*		*	90	
			5310-877-5797	MS21044N3 <96906>	.NUT,SELF-LOCKING,HEXAGON....		EA		1	*	*	*		*	90	
					---*---											
P	F		1560-554-1092	S1640-61185 <78286>	.SPACER,SLEEVE.....		EA		1	*	2	2		*	90	4
P	F		1560-554-1085	S1640-61186 <78286>	.SPACER,SLEEVE.....		EA		2	*	2	2		*	90	5
			5315-234-1856	MS24665-155 <96906>	.PIN,COTTER.....		HD		1	*	*	*		*	90	6
P	F		5340-664-3783	S1640-61184 <78286>	.CONNECTOR,ROD END.....		EA		1	*	2	2		*	90	7
			5310-316-8956	AN316-4R <88044>	.NUT,PLAIN,HEXAGON.....		HD		1	*	*	*		*	90	8
			5306-292-8275	AN173H12A <88044>	.BOLT,MACHINE.....		EA		1	*	*	*		*	90	9
			5310-167-0753	AN960PD10L <88044>	.WASHER,FLAT.....		HD		2	*	*	*		*	90	
			5310-877-5797	MS21044N3 <96906>	.NUT,SELF-LOCKING,HEXAGON....		EA		1	*	*	*		*	90	
			5315-234-1856	MS24665-155 <96906>	.PIN,COTTER.....		HD		1	*	*	*		*	90	10
P	F		3110-682-2394	S1630-61007-5 <78286>	.BEARING,BALL,ROD END.....		EA		1	*	*	*		REF	90	11
			5310-316-8956	AN316-4R <88044>	.NUT,PLAIN,HEXAGON.....		HD		1	*	*	*		*	90	12
			5315-234-1856	MS24665-155 <96906>	.PIN,COTTER.....		HD		2	*	*	*		*	90	13
P	F		1560-633-4387	S1640-61167-2 <78286>	.CYLINDER ASSEMBLY RPLS--... 1560-326-3517, 1560-613-9559,& 1560-672-3548 USBL EFF 58-1721 & SUBSEQUENT ATTACHING PARTS		EA		2	*	2	2		*	90	14
			5306-292-8276	AN173H11A <88044>	.BOLT,MACHINE.....		EA		1	*	*	*		*	90	15
			5310-167-0753	AN960PD10L <88044>	.WASHER,FLAT.....		HD		2	*	*	*		*	90	
			5310-877-5797	MS21044N3 <96906>	.NUT,SELF-LOCKING,HEXAGON....		EA		1	*	*	*		*	90	
					---*---											
P	F		3110-554-3379	555-00379-0004 <96906>	..BEARING,BALL,ROD END.....		EA		1	*	*	*		*	90	16
			5310-316-8956	AN316-4R <88044>	..NUT,PLAIN,HEXAGON.....		HD		1	*	*	*		*	90	17
			5315-234-1856	MS24665-155 <96906>	..PIN,COTTER.....		HD		1	*	*	*		*	90	18
P	H		1560-564-1497	S1640-61173 <78286>	..PISTON ASSEMBLY,FORCE..... GRADIENT		EA		1	*	*	*		*	90	19
			5315-234-1856	MS24665-155 <96906>	..PIN,COTTER.....		HD		1	*	*	*		*	90	21
				S1640-61168-1 <78286>	..ROD ASSEMBLY..... ATTACHING PARTS		EA		1						90	
				RR100C <80756>	..RING,RETAINING.....		EA		1						90	22
					---*---											
			5310-167-1285	AN310-4 <88044>	...NUT,CASTELLATED,HEXAGON...		HD		1	*	*	*		*	90	23
X1				S1640-61172 <78286>	...SPACER,SLEEVE.....		EA		1						90	24
X1				S1640-61171 <78286>	...BEARING,SLEEVE.....		EA		1						90	25
P	F		1560-315-0898	S1640-61169 <78286>	...SPRING,HELICAL,COMPRESSION		EA		1	*	*	*		*	90	26
X1				S1640-61171 <78286>	...BEARING,SLEEVE.....		EA		1						90	27
X1				S1640-61170 <78286>	...ROD,FORCE GRADIENT..... CYLINDER		EA		1						90	28
		R	1560-589-0890	S1640-61195 <78286>	.BRAKE,FORCE GRADIENT..... RPL-BY 1680-715-9537										90	

1 SOURCE MAINT AND REC CODE (a) SOURCE CODE	(b) MAINT CODE	(c) REC CODE	2 FEDERAL STOCK NUMBER	REFERENCE NUMBER	3 DESCRIPTION	MODELS USABLE ON CH-34C	4 UNIT OF ISSUE	5 QTY INC IN UNIT PACK	6 QTY INC IN UNIT	7 30-DAY DS GS MAINT ALW (a) 1-20	(b) 21-50	(c) 51-100	8 1-YR ALW PER 100 EQUIP CNTGCY	9 DEPOT MAINT ALW PER 100 EQUIP	10 ILLUSTRATION (a) FIG NO	(b) ITEM NO
			1630-589-4157	R460M3-2	<81039> .BRAKE ASSEMBLY..... RPL-BY 1680-715-9537										90	
		R	1630-631-3760	R460M3-1	<81039> .BRAKE,MAGNETIC..... RPL-BY 1680-715-9537										90	
		R	1630-674-9552	1041	<03678> .BRAKE,MAGNETIC..... RPL-BY 1680-715-9537										90	
		R	1630-793-2053	R460M3	<81039> .BRAKE,MAGNETIC..... RPL-BY 1680-715-9537										90	
		R	1680-604-8381	R460M3-21	<81039> .BRAKE,MAGNETIC,FORCE..... GRADIENT RPL-BY 1680-715-9537										90	
P	F	R	1680-715-9537	R460M3-211	<81039> .BRAKE,MAGNETIC..... RPLS-- 1560-589-0890, 1630-589-4157, 1630-631-3760, 1630-674-9552, 1630-793-2053,& 1680-604-8381 ATTACHING PARTS		EA		2	2	2	3	34	*	90	29
			5306-182-2038	AN4H22A	<88044> .BOLT,MACHINE.....		HD		4	*	*	*		*	90	30
			5310-184-9001	AN960PD416L	<88044> .WASHER,FLAT..... ---*---		HD		4	*	*	*		*	90	
P	F	R	1680-715-9537	R460M3-211	<81039> .MAGNETIC BRAKE,GRADIENT..... RPLS-- 1560-589-0890, 1630-589-4157, 1630-631-3760, 1630-674-9552, 1630-793-2053,& 1680-604-8381 ATTACHING PARTS		EA		2	REF	REF	REF	REF	REF	90	31
			5306-182-2038	AN4H22A	<88044> .BOLT,MACHINE..... ---*---		HD		4	*	*	*		*	90	32
			1630-765-5507	E10000	<81039> PARTS KIT,BRAKE,MAGNETIC..... RPL-BY 1630-732-1763 U/O 1630-589-4157, 1680-604-8381,& 1680-715-9537										90	
P	H		1630-732-1763	E10000-1	<81039> PARTS KIT,MAGNETIC BRAKE..... <OVERHAUL> RPLS-- 1630-765-5507 U/O 1630-589-4157, 1680-604-8381,& 1680-715-9507 SEE FUNCTIONAL GROUP 50 FOR FOR COMPONENTS		EA		1	*	*	*	2	*	90	
P	H		1630-778-2972	E10169	<81039> PARTS KIT,BRAKE,MAGNETIC..... OVERHAUL U/O 1680-604-8381, 1680-715-9537 SEE FUNCTIONAL GROUP 50 FOR COMPONENTS		EA		1	*	*	*	5	*	90	
P	H		1630-785-3637	E10168	<81039> PARTS KIT,BRAKE ASSEMBLY.....		EA		1	*	*	2		*	90	

(1) SOURCE, MAINT AND REC CODE (a) SOURCE CODE	(b) MAINT LEVEL	(c) REC CODE	(2) FEDERAL STOCK NUMBER	(3) DESCRIPTION REFERENCE NUMBER			MODELS USABLE ON CH-34C	(4) UNIT OF ISSUE	(5) QTY INC IN UNIT PACK	(6) QTY INC IN UNIT	(7) 30-DAY DS GS MAINT ALW (a) 1-20	(b) 21-50	(c) 51-100	(8) 1 YR ALW PER 100 EQUIP CNTGCY	(9) DEPOT MAINT ALW PER 100 EQUIP	(10) ILLUSTRATION (a) FIG NO	(b) ITEM NO
						CONTINUED U/O 1680-604-8381, 1680-715-9537 SEE FUNCTIONAL GROUP 50 FOR COMPONENTS										90	
		R	1630-631-3760	R460M3-1	<81039>	MAGNETIC BRAKE,GARDIENT..... SEE FIG.90 FOR NHA		EA		1						90A	
			5305-685-2290	AN500A4-4	<88044>	.SCREW,MACHINE.....		EA		2	*	*	*		*	90A	1
			5305-685-2290	AN500A4-4	<88044>	.SCREW,MACHINE.....		EA		2	*	*	*		*	90A	2
			5310-527-3821	AN364-836A	<88044>	.NUT,SELF-LOCKING,HEXAGON....		EA		2	*	*	*		*	90A	3
			5306-174-3951	AN22-18	<88044>	.BOLT,CLEVIS.....		EA		2	*	*	*		*	90A	4
			5310-167-0833	AN960-8L	<88044>	.WASHER,FLAT.....		HD		2	*	*	*		*	90A	5
				E3910	<81039>	.ARM,CRANK.....		EA		1						90A	6
			5305-156-2817	AN505-8R18	<88044>	.SCREW,MACHINE.....		EA		1	*	*	*		*	90A	7
			5305-059-4573	MS35190-258	<96906>	.SCREW,MACHINE.....		EA		1	*	*	*		*	90A	8
			5305-660-2625	MS35265-47	<96906>	.SCREW,MACHINE.....		EA		2	*	*	*		*	90A	9
X2	H			E2740M20-1	<81039>	.HOUSING,GEAR AND MOTOR.....		EA		1						90A	10
P	H		5340-032-1817	E2460	<81039>	.RING,RETAINING.....		EA		1	*	*	*		*	90A	11
P	H		3110-198-2844	E2175M1	<81039>	.BEARING,BALL,ANNULAR.....		EA		1	*	*	*		*	90A	12
P	H		5340-917-7863	E878	<81039>	.SHIM.....		EA		AR	*	*	*		*	90A	13
P	H		1680-527-1703	E381	<81039>	.SHIM.....		EA		AR	*	*	*		*	90A	14
				E4624	<81039>	.GEAR.....		EA		1						90A	15
				E779	<81039>	.BEARING,SLEEVE.....NOTE 1		EA		1						90A	18
P	H		1680-530-6164	E1024	<81039>	.SHIM SET.....NOTE 1		EA		AR	*	*	*		*	90A	19
			5305-282-4045	AN500A2-3	<88044>	.SCREW,MACHINE.....		HD		4	*	*	*		*	90A	21
P	H		1680-347-7946	E1356M3	<81039>	.ADAPTER,BRAKE CORE.....		EA		1	*	*	*		*	90A	22
P	H		6105-093-7411	E1356	<81039>	.SHIM.....		EA		AR	*	*	*		*	90A	23
P	H		1680-535-5203	E3270M1	<81039>	.COIL AND CORE ASSEMBLY.....		EA		1	*	*	*		*	90A	24
P	H		1680-589-5434	E194M3	<81039>	.SPRING,HELICAL,COMPRESSION..		EA		1	*	*	*		*	90A	25
P	H		1680-535-5202	E201M7	<81039>	.DISK ASSEMBLY.....		EA		1	*	*	*		*	90A	26
P	H		3110-155-9590	4131102-2A1A	<81039>	.BEARING,BALL,ANNULAR.....		EA		1	*	*	*		*	90A	27
			5315-844-5644	MS16562-194	<96906>	.PIN,SPRING.....		HD		1	*	*	*		*	90A	28
P	H		1680-727-5054	E4684	<81039>	.COLLAR,SHAFT.....		EA		1	*	*	*		*	90A	29
P	H		6105-685-0085	E489	<81039>	.SHIM.....		EA		AR	*	*	*		*	90A	30
P	H		1680-346-4004	E3275	<81039>	.SPIDER,CENTRIFUGAL.....		EA		1	*	*	*		*	90A	31
P	H		1680-346-4005	E3276	<81039>	.WEIGHT,CENTRIFUGAL BRAKE....		EA		4	*	*	*		*	90A	32
			5305-151-2297	AN507-440R4	<88044>	.SCREW,MACHINE.....		HD		4	*	*	*		*	90A	33
P	H		1680-346-4003	E3274	<81039>	.DISK,CENTRIFUGAL BRAKE.....		EA		1	*	*	*		*	90A	34
				E3277	<81039>	.DRUM.....		EA		1						90A	35
P	H		1680-730-2089	E2300M4	<81039>	.SHAFT ASSEMBLY.....		EA		1	*	*	*		*	90A	36
P	H		5340-370-4629	E1641	<81039>	.SPACER,RING.....		EA		2	*	*	*		*	90A	37
P	H		1680-527-1703	E381	<81039>	.SHIM.....		EA		AR	*	*	*		*	90A	38
			5340-917-7863	E878	<81039>	.SHIM.....		EA		AR	*	*	*		*	90A	39
				4131104-0A1A	<81039>	.BEARING.....		EA		2						90A	40
P	H		1680-795-0805	E4627	<81039>	.LINER,BEARING.....		EA		2	*	*	*		*	90A	41
P	H		1680-530-6164	E1024	<81039>	.SHIM SET.....NOTE 1		EA		AR	*	*	*		*	90A	42

(1) SOURCE, MAINT AND REC CODE (a) SOURCE CODE	(b) MAINT LEVEL	(c) REC CODE	(2) FEDERAL STOCK NUMBER	REFERENCE NUMBER	(3) DESCRIPTION	MODELS USABLE ON CH-34C	(4) UNIT OF ISSUE	(5) QTY INC IN UNIT PACK	(6) QTY INC IN UNIT	(7) 30-DAY DS GS MAINT ALW (a) 1-20	(b) 21-50	(c) 51-100	(8) 1-YR ALW PER 100 EQUIP CNTGCY	(9) DEPOT MAINT ALW PER 100 EQUIP	(10) ILLUSTRATION (a) FIG NO	(b) ITEM NO
			1560-331-5076	S1640-61210	<78286> ..MIXER ASSEMBLY RPL-BY..... 1560-768-2660										91	
AD	F			S1640-61210-1	<78286> ..MIXER ASSEMBLY RPLS--..... 1560-331-5076 SEE FIG.93 FOR BREAKDOWN		EA		1						91	25
P	F	R	1560-699-4378	S1665-61684	<78286> ..CYLINDER ASSEMBLY,SERVO.... ATTACHING PARTS		EA		1	*	2	2		*	91	26
			5306-550-3405	AN173H10A	<88044> ..BOLT,MACHINE.....		EA		1	*	*	*		*	91	27
			5310-807-1467	MS21042-3	<96906> ..NUT,SELF-LOCKING,HEXAGON...				1	*	*	*		*	91	
			5306-292-8275	AN173H12A	<88044> ..BOLT,MACHINE.....		EA		1	*	*	*		*	91	28
			5310-167-0753	AN960PD10L	<88044> ..WASHER,FLAT.....		HD		2	*	*	*		*	91	
			5310-807-1467	MS21042-3	<96906> ..NUT,SELF-LOCKING,HEXAGON...				1	*	*	*		*	91	
					---*---											
			5310-141-3010	NAS509-4	<80205> ...NUT,PLAIN,HEXAGON.....		EA		1	*	*	*		*	91	29
			5310-297-4068	NAS513-4	<80205> ...WASHER,KEY.....		EA		1	*	*	*		*	91	
			1650-532-6637	S1665-61686	<78286> ...ROD END RPL-BY..... 1560-663-4390										91	
P	O		1560-633-4390	S1665-61686-1	<78286> ...ROD END..... RPLS-- 1650-532-6637		EA		1	*	*	*		*	91	30
X1				S1665-61690	<78286> ...SHAFT,SERVO UNIT.....		EA		1						91	32
P	F		1560-699-4379	S1665-61685	<78286> ...SPRING,HELICAL,COMPRESSION		EA		1	*	*	*		*	91	33
P	F		5310-596-8837	S1665-61691	<78286> ...WASHER,FLAT.....		EA		1	*	*	*		*	91	34
P	F	T	1650-654-1457	S1665-61750	<78286> ..SERVO UNIT ASSEMBLY,..... HYDRAULIC SEE FIG.94 FOR BREAKDOWN ATTACHING PARTS		EA		1	2	2	4	43	*	91	35
			5306-180-2754	AN5H15	<88044> ..BOLT,MACHINE.....		EA		8	*	*	*		*	91	36
			5310-187-2399	AN960PD516	<88044> ..WASHER,FLAT.....		HD		8	*	*	*		*	91	
					---*---											
P	O		1560-575-6471	S1640-61244-1	<78286> ..PANEL ASSEMBLY,FLIGHT..... CONTROLS		EA		1	*	*	*		REF	91	37
			1560-334-6377	S1640-61297	<78286> ..SUPPORT ASSEMBLY,SERVO..... AND MIXER RPL-BY 1560-591-6584										91	
P	F		1560-591-6584	S1640-61297-1	<78286> ..SUPPORT ASSEMBLY,SERVO..... AND MIXER-LH RPLS-- 1560-334-6377		EA		1	*	*	*		*	91	38
P	O		1560-575-6467	S1640-61157-16	<78286> ..ROD ASSEMBLY,FLIGHT..... CONTROLS ATTACHING PARTS		EA		1	*	*	*		*	91	39
			5306-206-6370	NAS464-4-18	<80205> ..BOLT,SHEAR.....		EA		2	*	*	*		*	91	40
			5310-187-2354	AN960PD416	<88044> ..WASHER,FLAT.....		HD		4	*	*	*		*	91	
			5310-176-8108	AN320-4	<88044> ..NUT,SLOTTED,HEXAGON.....		HD		2	*	*	*		*	91	
			5315-234-1856	MS24665-155	<96906> ..PIN,COTTER.....		HD		2	*	*	*		*	91	
			5306-206-1366	MS20004-34	<96906> ..BOLT,INTERNAL WRENCHING....		EA		1	*	*	*		*	91	
					---*---											
			1560-332-3554	S1640-61233	<78286> ..BELLCRANK ASSEMBLY,..... AZIMUTH CONTROLS RPL-BY 1560-591-6771										91	
P	F		1560-591-6771	S1640-61233-1	<78286> ..BELLCRANK ASSEMBLY,..... AZIMUTH CONTROLS RPLS-- 1560-332-3554		EA		1	*	*	*		*	91	41

(1) SOURCE, MAINT AND REC CODE (a) SOURCE CODE	(b) MAINT LEVEL	(c) REC CODE	(2) FEDERAL STOCK NUMBER	REFERENCE NUMBER	(3) DESCRIPTION	MODELS USABLE ON CH-34C	(4) UNIT OF ISSUE	(5) QTY INC IN UNIT PACK	(6) QTY INC IN UNIT	(7) 30-DAY DS GS MAINT ALW (a) 1-20	(b) 21-50	(c) 51-100	(8) 1-YR ALW PER 100 EQUIP CNTGCY	(9) DEPOT MAINT ALW PER 100 EQUIP	(10) ILLUSTRATION (a) FIG NO	(b) ITEM NO
					CONTINUED										91	41
					ATTACHING PARTS											
			5306-206-6381	NAS464-5-47 <80205>	..BOLT,SHEAR.....		EA		1	*	*	*		*	91	42
			5310-187-2399	AN960PD516 <88044>	..WASHER,FLAT.....		HD		2	*	*	*		*	91	
			5310-088-0553	MS21044N5 <96906>	..NUT,SELF-LOCKING,HEXAGON...		HD		1	*	*	*		*	91	
					---*---											
			1560-334-6378	S1640-61298 <78286>	..SUPPORT ASSEMBLY,SERVO..... AND MIXER RPL-BY 1560-591-6585										91	
P	F		1560-591-6585	S1640-61298-1 <78286>	..SUPPORT ASSEMBLY,SERVO..... AND MIXER. RPLS-- 1560-334-6378		EA		1	*	*	*		*	91	43
P	F		1560-308-0167	S1640-61207-1 <78286>	...PLUG,UPPER CRANK SUPPORT..		EA		1	*	*	*		*	91	45
X2	F		1560-520-6320	S1640-61206 <78286>	...BRACKET,MIXER AND SERVO...		EA		1	*	*	*		*	91	
P	F		1560-308-0168	S1640-61207-2 <78286>	...PLUG,UPPER CRANK SUPPORT..		EA		1	*	*	*		*	91	46
MF	F			S1640-61296-1 <78286>	..BRACKET..... MAKEFR AR 9535-167-2280 AL ALLY SH		EA		1						91	48
P	F		1560-065-4382	S1640-61227 <78286>	..LINK,ROD,CONNECTING..... ATTACHING PARTS		EA		3	*	*	*		*	91	49
			5306-639-2302	NAS464-4-15 <80205>	..BOLT,SHEAR.....		EA		6	*	*	*		*	91	50
			5310-141-1795	AN960-416 <88044>	..WASHER,FLAT.....		HD		12	*	*	*		*	91	
			5310-176-8108	AN320-4 <88044>	..NUT,SLOTTED,HEXAGON.....		HD		6	*	*	*		*	91	
			5315-234-1856	MS24665-155 <96906>	..PIN,COTTER.....		HD		6	*	*	*		*	91	
					---*---											
P	F	R	1650-564-1581	S1665-61515-1 <78286>	CYLINDER ASSEMBLY-SERVO..... UNIT ACTUATING RPLS-- 1650-332-7208 SEE FIG.91 FOR NHA		EA			*	REF	REF	REF		92	
P	H		5340-576-6103	S1565-61580-1 <78286>	.CLEVIS,ROD.....		EA			*	*	*			92	
			5340-619-3205	S1565-61580-2 <78286>	.CLEVIS,ROD END RPL-BY..... 5340-738-4626										92	
P	H		5340-738-4626	S1565-61580-4 <78286>	.CLEVIS,ROD END RPLS--..... 5340-619-3205, 5340-664-6172		EA		1	*	*	*		*	92	1
			5310-316-8956	AN316-4R <88044>	.NUT,PLAIN,HEXAGON.....		HD		1	*	*	*		*	92	2
			5310-262-6183	NAS460-416 <80205>	.WASHER,KEY.....		LL		1	*	*	*		*	92	3
			5305-145-7017	AN503-10-8 <88044>	.SCREW,MACHINE.....		HD		1	*	*	*		*	92	4
			5310-167-0753	AN960PD10L <88044>	.WASHER,FLAT.....		HD		1	*	*	*		*	92	5
			5330-530-4341	MS28932-1 <96906>	.PACKING MATERIAL.....		SP		AR	3	9	17		*	92	6
			5330-559-6182	MS28775-211 <96906>	.PACKING,PREFORMED.....		EA		1	*	*	*		*	92	7
			5330-171-5075	MS28782-16 <96906>	.RETAINER,PACKING.....		EA		1	*	*	*		*	92	8
			5330-171-5075	MS28782-16 <96906>	.RETAINER,PACKING.....		EA		1	*	*	*		*	92	9
			5330-584-0263	MS28775-218 <96906>	.PACKING,PREFORMED.....		EA		1	*	*	*		*	92	10
			5330-171-6758	MS28782-23 <96906>	.RETAINER,PACKING.....		EA		1	*	*	*		*	92	11
			5330-171-6758	MS28782-23 <96906>	.RETAINER,PACKING.....		EA		1	*	*	*		*	92	12

(1) SOURCE, MAINT AND REC CODE (a) SOURCE CODE	(b) MAINT LEVEL	(c) REC CODE	(2) FEDERAL STOCK NUMBER	(3) DESCRIPTION REFERENCE NUMBER			MODELS USABLE ON CH-34C	(4) UNIT OF ISSUE	(5) QTY INC IN UNIT PACK	(6) QTY INC IN UNIT	(7) 30-DAY DS GS MAINT ALW (a) 1-20	(b) 21 50	(c) 51 100	(8) 1-YR ALW PER 100 EQUIP CNTGCY	(9) DEPOT MAINT ALW PER 100 EQUIP	(10) ILLUSTRATION (a) FIG NO	(b) ITEM NO
P	H		1650-306-4437	S1565-61578	<78286>	.CAP,END,SERVO ACTUATING.....		EA		1	*	*	*		*	92	13
P	H		5310-286-9596	S1565-61582	<78286>	.WASHER.....		EA		1	*	*	*		*	92	14
P	H		5340-505-4015	S1565-61577	<78286>	.SPRING,HELICAL,COMPRESSION..		EA		1	*	*	*		*	92	15
			5330-559-6182	MS28775-211	<96906>	.PACKING,PREFORMED.....		EA		1	*	*	*		*	92	16
			5330-171-5075	MS28782-16	<96906>	.RETAINER,PACKING.....		EA		1	*	*	*		*	92	17
			5330-171-5075	MS28782-16	<96906>	.RETAINER,PACKING.....		EA		1	*	*	*		*	92	18
P	H		1650-096-5357	S1665-61518	<78286>	.PISTON,LINEAR ACTUATING.....		EA		1	*	*	*		*	92	19
P	H		1650-096-5356	S1665-61516	<78286>	.HEAD,LINEAR ACTUATING..... CYLINDER		EA		1	*	2	2		*	92	20
X2	F		1650-531-9878	S1665-61519	<78286>	.PLATE,IDENTIFICATION.....		EA		1	*	*	*		*	92	21
P	H		1650-306-4441	S1565-61575	<78286>	.CYLINDER,HYDRAULIC SYSTEM...		EA		1	*	*	*		*	92	22
P	F		1650-715-2270	S1607-5576-2	<78286>	PARTS KIT,SERVO ACTUATOR..... U/D 1650-332-7208 & 1650-564-1581 SEE FUNCTIONAL GROUP 50 FOR COMPONENTS		EA		1	*	2	2		*	92	
AD	F			S1640-61210-1	<78286>	MIXER ASSEMBLY RPLS--..... 1560-331-5076 SEE FIG.91 FOR NHA		EA								93	
			5315-234-1856	MS24665-155	<96906>	.PIN,COTTER.....		HD		1	*	*	*		*	93	1
P	F		5310-638-1148	S1640-61212	<78286>	.NUT,PLAIN,ROUND.....		EA		1	*	*	*		*	93	2
P	F		3110-275-0137	KP23BS	<21335>	.BEARING,BALL,AIRFRAME.....		EA		1	*	*	*		*	93	3
P	H		5340-209-0415	S1640-61216-2	<78286>	.SPACER,RING.....		EA		3	*	*	*		*	93	4
P	F		5340-595-5654	S1640-61216-1	<78286>	.SPACER,RING.....		EA		4	2	3	7		*	93	5
P	F		1560-332-3552	S1640-61231-1	<78286>	.ROD ASSEMBLY,AZIMUTH..... CONTROLS		EA		2	*	*	2		*	93	6
						ATTACHING PARTS											
			5306-206-6370	NAS464-4-18	<80205>	.BOLT,SHEAR.....		EA		2	*	*	*		*	93	7
			5310-187-2354	AN960PD416	<88044>	.WASHER,FLAT.....		HD		4	*	*	*		*	93	
			5310-176-8108	AN320-4	<88044>	.NUT,SELF-LOCKING,HEXAGON....		HD		2	*	*	*		*	93	
			5315-234-1856	MS24665-155	<96906>	.PIN,COTTER.....		HD		2	*	*	*		*	93	
						---*---											
			1560-305-4184	S1640-61304	<78286>	.BELL CRANK ASSEMBLY..... RPL-BY 1560-591-6764										93	
P	F		1560-591-6764	S1640-61304-3	<78286>	.BELL CRANK ASSEMBLY..... RPLS-- 1560-305-4184		EA		1	*	*	*		*	93	8
P	F		3110-271-0011	DSRP4	<21335>	..BEARING,ROLLER,AIRFRAME....		EA		1	*	*	*		*	93	9
P	F		3110-142-4486	AN202KP23B	<88044>	..BEARING,BALL,AIRFRAME.....		EA		2	*	*	*		*	93	10
			3120-725-2962	NAS537-4P26	<80205>	..BUSHING,SLEEVE.....		EA		1	*	*	*		*	93	11
			3120-580-9991	NAS538-4P17	<80205>	..BUSHING,SLEEVE.....		EA		1	*	*	*		*	93	12
P	D		5310-768-3862	SS4400-1	<78286>	..WASHER.....		EA		1	*	*	*		*	93	13
			1560-332-3551	S1640-61219	<78286>	.BELL CRANK ASSEMBLY..... RPL-BY 1560-606-7520										93	
P	F		1560-606-7520	S1640-61219-1	<78286>	.BELL CRANK ASSEMBLY,..... AZIMUTH CONTROLS RPLS-- 1560-332-3551		EA		2	*	*	*		*	93	14

(1) SOURCE, MAINT AND REC CODE (a) SOURCE CODE	(b) MAINT LEVEL	(c) REC CODE	(2) FEDERAL STOCK NUMBER	REFERENCE NUMBER	(3) DESCRIPTION	MODELS USABLE ON CH-34C	(4) UNIT OF ISSUE	(5) QTY INC IN UNIT PACK	(6) QTY INC IN UNIT	(7) 30-DAY DS GS MAINT ALW (a) 1-20	(b) 21-50	(c) 51-100	(8) 1-YR ALW PER 100 EQUIP CNTGCY	(9) DEPOT MAINT ALW PER 100 EQUIP	(10) ILLUSTRATION (a) FIG NO	(b) ITEM NO
					CONTINUED										93	14
					ATTACHING PARTS											
			5306-207-2317	NAS464-5-51 <80205>	.BOLT,SHEAR.....		EA		1	*	*	*		*	93	15
			5310-187-2399	AN960PD516 <88044>	.WASHER,MACHINE.....		HD		2	*	*	*		*	93	
			5310-660-3381	MS21083N5 <96906>	.NUT,SELF-LOCKING,HEXAGON....		EA		1	*	*	*		*	93	
					---*---											
			3120-725-2962	NAS537-4P26 <80205>	..BUSHING,SLEEVE.....		EA		2	*	*	*		*	93	16
			3120-580-9991	NAS538-4P17 <80205>	..BUSHING,SLEEVE.....		EA		2	*	*	*		*	93	17
P	F		5310-768-3862	SS4400-1 <78286>	..WASHER.....		EA		2	*	*	*		REF	93	18
			1560-305-4186	S1640-61306 <78286>	.ARM ASSEMBLY RPL-BY.....										93	
					1560-591-6766											
P	F		1560-591-6766	S1640-61306-3 <78286>	.ARM ASSEMBLY RPLS--.....		EA		1	*	*	*		*	93	19
					1560-305-4186											
					ATTACHING PARTS											
			5315-265-9890	AN386-3-19A <88044>	.PIN,TAPERED,THREADED.....		EA		2	*	*	*		*	93	20
			5310-167-0686	AN975-4 <88044>	.WASHER,RECESSED.....		HD		2	*	*	*		*	93	
			5310-543-4443	MS20364-428A <96906>	.NUT,SELF-LOCKING,HEXAGON....		HD		2	*	*	*		*	93	
					---*---											
			3120-528-6623	NAS537-5-75 <80205>	..BUSHING,SLEEVE.....		EA		1	*	*	*		*	93	
P	F		3110-271-0011	DSRP4 <21335>	..BEARING,ROLLER,AIRFRAME....		EA		1	*	*	*		REF	93	21
			1560-305-4185	S1640-61305 <78286>	.BELL CRANK ASSEMBLY.....										93	
					RPL-BY 1560-591-6767											
P	F		1560-591-6767	S1640-61305-3 <78286>	.BELL CRANK ASSEMBLY.....		EA		1	*	*	*		*	93	22
					RPLS-- 1560-305-4185											
P	F		3110-142-4486	AN202KP23B <88044>	..BEARING,BALL,AIRFRAME.....		EA		2	*	*	*		REF	93	23
P	F		3110-271-0011	DSRP4 <21335>	..BEARING,ROLLER,AIRFRAME....		EA		1	*	*	*		REF	93	24
			3120-725-2962	NAS537-4P26 <80205>	..BUSHING,SLEEVE.....		EA		2	*	*	*		*	93	25
			3120-580-9991	NAS538-4P17 <80205>	..BUSHING,SLEEVE.....		EA		2	*	*	*		*	93	26
P	F		5310-768-3862	SS4400-1 <78286>	..WASHER.....		EA		2	*	*	*		REF	93	27
P	F		1560-332-3553	S1640-61231-2 <78286>	.ROD ASSEMBLY,AZIMUTH.....		EA		1	*	*	2		*	93	28
					CONTROLS											
					ATTACHING PARTS											
			5306-206-6370	NAS464-4-18 <80205>	.BOLT,SHEAR.....		EA		2	*	*	*		*	93	29
			5310-187-2354	AN960PD416 <88044>	.WASHER,FLAT.....		HD		4	*	*	*		*	93	
			5310-176-8108	AN320-4 <88044>	.NUT,SLOTTED,HEXAGON.....		HD		2	*	*	*		*	93	
			5315-234-1856	MS24665-155 <96906>	.PIN,COTTER.....		HD		2	*	*	*		*	93	
					---*---											
			1560-305-4188	S1640-61308 <78286>	.BELL CRANK ASSEMBLY.....										93	
					RPL-BY 1560-591-6776											
P	F		1560-591-6776	S1640-61308-3 <78286>	.BELL CRANK ASSEMBLY.....		EA		1	*	*	*		*	93	32
					RPLS-- 1560-305-4188											
					ATTACHING PARTS											
			5306-292-5173	NAS464-6-47 <80205>	.BOLT,SHEAR.....		EA		1	*	*	*		*	93	33
			5310-187-2400	AN960PD616 <88044>	.WASHER,FLAT.....		HD		2	*	*	*		*	93	
			5310-275-2016	MS20364-624A <96906>	.NUT,SELF-LOCKING,HEXAGON....		HD		1	*	*	*		*	93	
					---*---											
P	F		3110-142-4470	MS20200KP6 <96906>	..BEARING,BALL,AIRFRAME.....		EA		2	*	*	*		*	93	34
P	F		1560-936-5527	SS4059-04-75 <78286>	..SPACER ASSEMBLY.....		EA		1	*	*	*		*	93	35
					RPL-BY 1560-936-5527											
P	F		1560-936-5527	SS4059-04-75 <78286>	..SPACER,AIRCRAFT RPLS.....		EA		1	*	*	*		*	93	35
					1560-570-4850											
			3120-725-2962	NAS537-4P26 <80205>	..BUSHING,SLEEVE.....		EA		2	*	*	*		*	93	36

(1) SOURCE, MAINT AND REC CODE (a) SOURCE CODE	(b) MAINT LEVEL	(c) REC CODE	(2) FEDERAL STOCK NUMBER	REFERENCE NUMBER	(3) DESCRIPTION	MODELS USABLE ON CH-34C	(4) UNIT OF ISSUE	(5) QTY INC IN UNIT PACK	(6) QTY NC IN UNIT	(7) 30-DAY DS GS MAINT ALW (a) 1-20	(b) 21 50	(c) 51-100	(8) 1-YR ALW PER 100 EQUIP CNTGCY	(9) DEPOT MAINT ALW PER 100 EQUIP	(10) ILLUSTRATION (a) FIG NO	(b) ITEM NO
			3120-580-9991	NAS538-4P17 <80205>	..BUSHING,SLEEVE.....		EA		2	*	*	*		*	93	37
P	F		5310-768-3862	SS4400-1 <78286>	..WASHER.....		EA		2	*	*	*		REF	93	38
			1560-305-4187	S1640-61307 <78286>	.ARM ASSEMBLY RPL-BY..... 1560-591-6775										93	
P	F		1560-591-6775	S1640-61307-3 <78286>	.ARM ASSEMBLY RPLS--..... 1560-305-4187		EA		1	*	*	*		*	93	39
					ATTACHING PARTS											
			5315-265-9890	AN386-3-19A <88044>	.PIN,TAPERED,THREADED.....		EA		2	*	*	*		*	93	40
			5310-167-0686	AN975-4 <88044>	.WASHER,RECESSED.....		HD		2	*	*	*		*	93	
			5310-543-4443	MS20364-428A <96906>	.NUT,SELF-LOCKING,HEXAGON....		HD		2	*	*	*		*	93	
					---*---											
			3120-627-2143	NAS537-6P38 <80205>	.BUSHING,SLEEVE.....		EA		1	*	*	*		*	93	
P	F		5340-286-9595	S1640-61215 <78286>	.SPACER,RING.....		EA		1	*	*	*		*	93	41
P	F		3110-275-0137	KP23BS <21335>	.BEARING,BALL,AIRFRAME.....		EA		1	*	*	*		REF	93	42
P	F		1650-310-1423	S1640-61211 <78286>	.SHAFT,FLIGHT CONTROLS.....		EA		1	*	*	*		*	93	43
					SERVO UNIT ASSEMBLY,HYDRAULIC										94	
		R	1650-613-1010	S1665-61611-1 <78286>	SERVO UNIT ASSEMBLY,..... HYDRAULIC		EA								94	
P	F	T	1650-654-1457	S1665-61750 <78286>	SERVO UNIT ASSEMBLY,..... HYDRAULIC SEE FIG.91 FOR NHA		EA			REF	REF	REF	REF		94	
			1650-096-5358	S1665-61541 <78286>	.COVER ASSEMBLY RPL-BY..... 1650-507-0184										94	
P	O		1650-507-0184	S1665-61636 <78286>	.COVER ASSEMBLY,SERVO UNIT... RPLS-- 1650-096-5358		EA		3	*	*	*		*	94	1
					ATTACHING PARTS											
			5305-264-2100	AN500A4-12 <88044>	.SCREW,MACHINE.....		HD		2	*	*	*		*	94	2
					---*---											
P	O		6615-656-5123	S1665-61758 <78286>	.COVER ASSEMBLY.....		EA		3	*	*	2		*	94	3
					ATTACHING PARTS											
			5305-720-8428	MS35266-73 <96906>	.SCREW,MACHINE.....				1	*	*	*		*	94	4
			5310-167-0753	AN960PD10L <88044>	.WASHER,FLAT.....		HD		1	*	*	*		*	94	
					---*---											
			5305-145-7014	AN503-8-16 <88044>	.SCREW,MACHINE.....		HD		3	*	*	*		*	94	5
			5310-811-3494	MS21044N08 <96906>	.NUT,SELF-LOCKING,HEXAGON....		EA		3	*	*	*		*	94	6
				S1665-61767 <78286>	.DUMMY MOTOR ASSEMBLY SEE... FIG.95 FOR BREAKDOWN		EA		3						94	7
					ATTACHING PARTS											
			5305-579-4554	AN500A4-10 <88044>	.SCREW,MACHINE.....		EA		4	3	7	15		*	94	8
					---*---											
P	D		5330-202-4475	S1565-61622 <78286>	.GASKET.....		EA		3					*	94	9
AD	D			S1665-61631 <78286>	.ADAPTER ASSEMBLY.....		EA		3						94	10
					ATTACHING PARTS											
			5305-271-7778	AN503-8-10 <88044>	.SCREW,MACHINE.....		HD		1					*	94	11
			5310-184-8966	AN960PD8 <88044>	.WASHER,FLAT.....		HD		2					*	94	
			5310-811-3494	MS21044N08 <96906>	.NUT,SELF-LOCKING,HEXAGON....		EA		1					*	94	

(1) SOURCE, MAINT AND REC CODE (a) SOURCE CODE	(b) MAINT LEVEL	(c) REC CODE	(2) FEDERAL STOCK NUMBER	REFERENCE NUMBER		(3) DESCRIPTION	MODELS USABLE ON CH-34C	(4) UNIT OF ISSUE	(5) QTY INC IN UNIT PACK	(6) QTY INC IN UNIT	(7) 30-DAY DS GS MAINT ALW (a) 1-20	(b) 21-50	(c) 51-100	(8) 1-YR ALW PER 100 EQUIP CNTGCY	(9) DEPOT MAINT ALW PER 100 EQUIP	(10) ILLUSTRATION (a) FIG NO	(b) ITEM NO
						CONTINUED ---*---										94	
P	D		5305-637-1702	S1665-61646	<78286>	..SETSCREW.....		EA		2					100	94	12
P	D		1560-652-6400	S1665-61658	<78286>	..BUMPER,RUBBER.....		EA		3					100	94	13
X2	D		5315-297-7863	S1665-61647-1	<78286>	..PIN,STRAIGHT,HEADLESS.....		EA		2					*	94	14
			5315-298-3641	S1665-61647-2	<78286>	..PIN,STRAIGHT,HEADLESS..... RPLS 5315-298-3641		EA		2						94	15
P	D		1560-308-3541	S1665-61632	<78286>	..LEVER,LOCK.....		EA		2					*	94	16
X2	D		1650-341-9777	S1665-61630	<78286>	..ADAPTER.....		EA		1					*	94	
P	D		5305-550-4750	S1565-61797	<78286>	.SCREW,SHOULDER.....		EA		3					*	94	18
P	F	R	6615-627-8105	S1665-61755	<78286>	.SERVO,MOTOR ASSEMBLY..... ATTACHING PARTS		EA		3	*	*	*		*	94	19
			5305-282-2712	AN503-6-8	<88044>	.SCREW,MACHINE.....		HD		1	*	*	*		*	94	20
			5310-187-2398	AN960PD6L	<88044>	.WASHER,FLAT.....		HD		2	*	*	*		*	94	
			5310-811-3494	MS21044N08	<96906>	.NUT,SELF-LOCKING,HEXAGON....		EA		1	*	*	*		*	94	
						---*---											
P	D		6615-592-4877	S1565-61875	<78286>	..SHAFT AND STOP ASSEMBLY....		EA		3					*	94	
P	D		1560-717-8179	S1565-61882-3	<78286>	..ARM ASSEMBLY.....		EA		1					*	94	
X2	D		1650-341-9780	S1665-61660	<78286>	.GASKET.....		EA		3						94	21
MD	D			S1665-20029	<78286>	.PLATE,IDENTIFICATION..... MAKEFR AR QQA250-8H24-020 AL ALLY		EA		1						94	22
			6615-557-3394	S1665-61610-4	<78286>	.SERVO UNIT SUBASSEMBLY..... SEE FIG.96 FOR BREAKDOWN		EA		1	*	*	*			94	23
X1		T		S1665-61750-1	<78286>	.SERVO ASSEMBLY WHEN EXHTD.. RQTN NHA 1560-654-1457 SEE FIG.96 FOR BREAKDOWN		EA		1						94	
				S1565-61767	<78286>	DUMMY MOTOR ASSEMBLY SEE.... FIG.94 AND 106A FOR NHA		EA								95	
P	H		6615-346-1287	S1665-61638-2	<78286>	.YOKE ASSEMBLY,AUTO PILOT.... SERVO MOTOR		EA		1	*	*	*		*	95	1
P	H		1650-343-4347	S1665-61640	<78286>	..RETAINER ASSEMBLY,BEARING.. SERVO ATTACHING PARTS		EA		2	2	5	10		*	95	2
			5305-282-4045	AN500A2-3	<88044>	..SCREW,MACHINE.....		HD		2	*	*	*		*	95	3
						---*---											
X1				S1665-61642	<78286>	..BOLT,ADJUSTING.....		EA		1						95	4
			5310-188-7721	AN960PD6	<88044>	..WASHER,FLAT.....		HD		1	*	*	*		*	95	
			5310-905-8451	MS21083N06	<96906>	..NUT,SELF-LOCKING,HEXAGON...		HD		1	*	*	*		*	95	
X2	D		5315-576-5518	S1665-61638-1	<78286>	..PIN,STRAIGHT,HEADLESS.....		EA		1					*	95	5
X1				S1665-61643	<78286>	..PLATE,COVER.....		EA		1						95	6
X1				S1665-61644	<78286>	..SCREW,ADJUSTING.....		EA		1						95	7
P	D		1560-590-7774	S1665-61645-1	<78286>	..YOKE ASSEMBLY.....		EA		1					*	95	8
P	D		5315-349-1849	S1565-61769	<78286>	.PIN,GROOVED,HEADLESS.....		EA		1					*	95	9
AH	H			S1565-61767-1	<78286>	.ARM,ASSEMBLY,MOTOR..... DUMMY		EA		1						95	10

(1) SOURCE, MAINT AND REC CODE (a) SOURCE CODE	(b) MAINT LEVEL	(c) RECVT CODE	(2) FEDERAL STOCK NUMBER	REFERENCE NUMBER		(3) DESCRIPTION	MODELS USABLE ON CH-34C	(4) UNIT OF ISSUE	(5) QTY INC IN UNIT PACK	(6) QTY INC IN UNIT	(7) 30-DAY DS GS MAINT ALW (a) 1-20	(b) 21-50	(c) 51-100	(8) 1-YR ALW PER 100 EQUIP CNTGCY	(9) DEPOT MAINT ALW PER 100 EQUIP	(10) ILLUSTRATION (a) FIG NO	(b) ITEM NO
			5306-292-8282	AN173H7A	<88044>	..BOLT,MACHINE.....		EA		1	*	*	*		*	95	11
			5310-167-0753	AN960PD10L	<88044>	..WASHER,FLAT.....		HD		2	*	*	*		*	95	
			5310-807-1467	MS20364-1032C	<96906>	..NUT,SELF-LOCKING,HEXAGON...		HD		1	*	*	*		*	95	
P	F		3110-142-4277	MS20200K3L	<96906>	..BEARING,BALL,AIRFRAME.....		EA		1	*	*	*		*	95	12
P	F		1650-343-4345	S1565-61770	<78286>	..ARM,DUMMY MOTOR SERVO.....		EA		1	*	*	*		*	95	13
P	F		6615-966-2288	S1565-61664	<78286>	..MOTOR,DUMMY.....		EA		1	*	*	*		*	95	14
			6615-557-3394	S1665-61610-4	<78286>	SERVO UNIT SUBASSEMBLY SEE.. FIG.94 FOR NHA		EA			*	*	*			96	
X1				S1665-61750-1	<78286>	SERVO ASSEMBLY WHEN EXHTD... RQTN NHA 1560-654-1457 SEE FIG.94 FOR NHA		EA								96	
P	D		6615-341-9770	S1565-61778	<78286>	.ARM ASSEMBLY,FOLLOW-UP..... RPLS-- 6615-302-9075		EA		3					*	96	1
						ATTACHING PARTS											
			5306-141-4524	AN173H6A	<88044>	.BOLT,MACHINE.....		HD		2					*	96	2
			5310-167-0753	AN960PD10L	<88044>	.WASHER,FLAT.....		HD		4					*	96	
			5310-877-5797	MS21044N3	<96906>	.NUT,SELF-LOCKING,HEXAGON....		EA		2					*	96	
						---*---											
P	D		3110-142-4277	AN200K3L	<88044>	..BEARING,BALL,AIRFRAME.....		EA		1					50	96	3
P	D		3110-142-4312	AN200KS3L	<88044>	..BEARING,BALL,AIRFRAME.....		EA		1					30	96	4
P	D		3120-925-8029	S1565-61778-1	<78286>	..BUSHING,REAMED.....		EA		1					*	96	5
P	D		1560-571-6219	S1565-61795	<78286>	.ARM ASSEMBLY.....		EA		3					10	96	6
						ATTACHING PARTS											
			5306-141-4524	AN173H6A	<88044>	.BOLT,MACHINE.....		HD		1					*	96	7
			5310-167-0753	AN960PD10L	<88044>	.WASHER,FLAT.....		HD		2					*	96	
			5310-877-5797	MS21044N3	<96906>	.NUT,SELF-LOCKING,HEXAGON....		EA		1					*	96	
P	D		5305-550-2598	S1665-61663-3	<78286>	.SCREW,MACHINE.....		EA		1					*	96	8
P	D		5340-081-5397	S1665-61664-1	<78286>	.SPACER,RING.....		EA		3					*	96	9
P	D		5310-262-8327	S8157C82-032A	<78286>	.WASHER,FLAT.....		EA		1					*	96	10
			5310-905-8451	MS21083N06	<96906>	.NUT,SELF-LOCKING,HEXAGON....		HD		1					*	96	11
						---*---											
P	D		3110-142-4277	MS20200K3L	<96906>	..BEARING,BALL,AIRFRAME.....		EA		1					REF	96	12
P	D		1560-475-1964	S1565-61796	<78286>	..BUSHING ASSEMBLY.....		EA		1					*	96	13
P	H		1650-787-4289	S1665-61762	<78286>	.CONNECTING LINK,RIGID.....		EA		3	*	*	*		*	96	15
						ATTACHING PARTS											
P	D		5305-639-5308	S1665-61663-2	<78286>	.SCREW,MACHINE.....		EA		1					*	96	16
P	D		5340-081-5392	S1665-61664-3	<78286>	.SPACER,SLEEVE.....		EA		2					*	96	17
P	D		5340-550-3072	S1665-61664-2	<78286>	.SPACER,RING.....		EA		1					*	96	18
P	D		5310-545-4617	22M50	<72962>	.NUT,SELF LOCKING.....		EA		1					*	96	19
						---*---											
P	H		3110-542-0146	5632FCHH	<40920>	..BEARING,BALL ANNULAR.....		EA		2	*	*	*		*	96	21
P	H		6615-571-6241	S1565-61793	<78286>	.FORK ASSEMBLY,HYDRAULIC..... SYSTEM		EA		3	*	*	*		*	96	22
						ATTACHING PARTS											
P	D		5305-639-5307	S1665-61663-1	<78286>	.SCREW,MACHINE.....		EA		1	*	*	*		*	96	23
P	H		5340-550-3072	S1665-61664-2	<78286>	.SPACER,RING.....		EA		2	*	*	*		REF	96	24

(1) SOURCE, MAINT AND REC CODE (a) SOURCE CODE	(b) MAINT LEVEL	(c) REC CODE	(2) FEDERAL STOCK NUMBER	REFERENCE NUMBER	(3) DESCRIPTION	MODELS USABLE ON CH-34C	(4) UNIT OF ISSUE	(5) QTY INC IN UNIT PACK	(6) QTY INC IN UNIT	(7) 30-DAY DS/GS MAINT ALW (a) 1-20	(b) 21-50	(c) 51-100	(8) 1-YR ALW PER 100 EQUIP CNTGCY	(9) DEPOT MAINT ALW PER 100 EQUIP	(10) ILLUSTRATION (a) FIG NO	(b) ITEM NO
P	D		5310-545-4617	22M50	<72962> .NUT,SELF-LOCKING.....		EA		1	*	*	*		REF	96	25
					---*---											
				418FCHH	<40920> ..BEARING.....		EA		2						96	26
P	H		1560-783-5232	S1565-61794	<78286> .LUG.....		EA		3	*	*	*		*	96	27
					ATTACHING PARTS											
			5305-687-6724	AN503-6-6	<88044> .SCREW,MACHINE.....		HD		2	*	*	*		*	96	28
			5310-187-2398	AN960PD6L	<88044> .WASHER,FLAT.....		HD		2	*	*	*		*	96	
					---*---											
			1560-567-1080	S1565-61605	<78286> .ROD END ASSEMBLY.....		EA								96	
					OBS-BY 1560-673-0265											
P	D		1560-673-0265	S1565-61792-2	<78286> .ROD END ASSEMBLY.....		EA		3					40	96	29
					ATTACHING PARTS											
			5306-550-3405	AN173H10A	<88044> .BOLT,MACHINE.....		EA		1					*	96	30
			5306-292-8276	AN173H11A	<88044> .BOLT,MACHINE.....		EA		1					*	96	
			5310-167-0753	AN960PD10L	<88044> .WASHER,FLAT.....		HD		2					*	96	
			5310-183-4406	AN960PD10	<88044> .WASHER,FLAT.....		HD		1					*	96	
			5310-877-5797	MS21044N3	<96906> .NUT,SELF-LOCKING,HEXAGON....		EA		1					*	96	
					---*---											
P	F		3110-690-7297	REP3ML3FS210	<21335> ..BEARING,BALL,ROD END.....		EA		1	*	*	*		*	96	31
P	D		5310-822-4892	S1565-61803	<78286> ..NUT,PLAIN,HEXAGON.....		EA		1					*	96	32
P	D		1560-570-4064	S1565-61620-1	<78286> ..BUSHING,ADJUSTING.....		EA		1					*	96	33
			5305-151-0385	AN500A6-12	<88044> ..SCREW,MACHINE.....		HD		1					*	96	34
			5310-187-2398	AN960PD6L	<88044> ..WASHER,FLAT.....		HD		2					*	96	
			5310-905-8451	MS21083N06	<96906> ..NUT,SELF-LOCKING,HEXAGON...		HD		1					*	96	
P	D		5340-509-3927	S1565-61619	<78286> ..CONNECTOR ROD,END.....		EA		1					*	96	35
				MS20470AD3	<96906> ..RIVET.....		EA		2						96	36
					---*---											
P	D		1650-302-3435	S1565-61661	<78286> ..BELLOWS ASSEMBLY.....		EA		1					*	96	37
P	D		1650-604-8216	S1565-61892	<78286> ..BELLOWS ASSEMBLY.....		EA		1					*	96	
P	D		3110-142-4312	AN200KS3L	<88044> ..BEARING,BALL,AIRFRAME.....		EA		1					REF	96	38
				S1565-61791	<78286> ..ROD,SERVO UNIT.....		EA		1						96	
			5330-579-7911	MS28775-215	<96906> .PACKING,PREFORMED.....		EA		3					*	96	39
P	D		3110-278-6941	S1665-61535	<78286> .BEARING,ROD END.....		EA		3					*	96	40
			5310-275-0387	NAS509-6	<80205> .NUT,PLAIN,HEXAGON.....		EA		3					*	96	41
			5310-527-4509	NAS513-6	<80205> .WASHER,KEY.....		EA		3					*	96	42
P	D		5340-664-6165	S1565-61618	<78286> .CLEVIS,ROD END.....		EA		3					*	96	43
					ATTACHING PARTS											
			5315-058-9698	MS16562-191	<96906> .PIN,SPRING.....		HD		3					*	96	44
					---*---											
P	D		6615-340-2127	S1665-61628	<78286> .PLATE ASSEMBLY,MOUNTING.....		EA		1					*	96	45
					ATTACHING PARTS											
			5306-182-2039	AN4H23A	<88044> .BOLT,MACHINE.....		EA		2					*	96	46
			5310-187-2354	AN960PD416	<88044> .WASHER,FLAT.....		HD		4					*	96	
			5310-877-5796	MS21044N4	<96906> .NUT,SELF-LOCKING,HEXAGON....		EA		2					*	96	
			5306-182-2019	AN4H25A	<88044> .BOLT,MACHINE.....		EA		1					*	96	47
			5310-187-2354	AN960PD416	<88044> .WASHER,FLAT.....		HD		2					*	96	
			5310-877-5796	MS21044N4	<96906> .NUT,SELF-LOCKING,HEXAGON....		EA		1					*	96	
			5306-151-0405	AN74A26	<88044> .BOLT.....		EA		1					*	96	48
			5310-184-9001	AN960PD416L	<88044> .WASHER,FLAT.....		HD		2					*	96	
			5310-187-2354	AN960PD416	<88044> .WASHER,FLAT.....		HD		AR					*	96	
					---*---											
			5315-234-1851	MS24665-24	<96906> ..PIN,COTTER.....				6					*	96	49

(1) SOURCE, MAINT AND REC CODE (a) SOURCE CODE	(b) MAINT CATEGORY	(c) REC CODE	(2) FEDERAL STOCK NUMBER	REFERENCE NUMBER		(3) DESCRIPTION	MODELS USABLE ON CH-34C	(4) UNIT OF ISSUE	(5) QTY INC IN UNIT PACK	(6) QTY INC IN UNIT	(7) 30-DAY DS GS MAINT ALW (a) 1-20	(b) 21-50	(c) 51-100	(8) 1-YR ALW PER 100 EQUIP CNTGCY	(9) DEPOT MAINT ALW PER 100 EQUIP	(10) ILLUSTRATION (a) FIG NO	(b) ITEM NO
			5310-088-0551	MS21044N04	<96906>	..NUT,SELF-LOCKING,HEXAGON...		EA		6					*	96	50
			5310-782-1349	MS15795-804	<96906>	..WASHER,FLAT.....				12					*	96	51
P	D		6615-663-3059	S1665-61633	<78286>	..SPRING,HELICAL,COMPRESSION.		EA		6					*	96	52
P	D		5305-616-6615	S1665-61635	<78286>	..SCREW,SHOULDER.....		EA		6					*	96	53
P	D		1560-316-2903	S1565-61658	<78286>	..BEARING,SLEEVE.....		EA		3					*	96	54
P	D		1560-304-4586	S1565-61637	<78286>	..BEARING,SLEEVE.....		EA		3					*	96	55
P	D		1560-304-4586	S1565-61637	<78286>	..BEARING,SLEEVE.....		EA		3					REF	96	62
			5310-146-8442	MS35426-1	<96906>	..NUT,PLAIN,WING.....		EA		2					*	96	63
			5310-183-4406	AN960PD10	<88044>	..WASHER,FLAT.....		HD		4					*	96	
				79-018-062-0500	<72962>	..ROLL,PIN.....		EA		2						96	66
						---*---											
P	D		1560-475-3927	S1565-61887-1	<78286>	..PIN.....		EA		3					*	96	70
P	D		1650-662-3600	S1565-61633	<78286>	.BEARING,SLEEVE.....		EA		2					*	96	73
P	D		1650-662-3600	S1565-61633	<78286>	.BEARING,SLEEVE.....		EA		2					REF	96	74
P	D		5307-445-6319	S1665-61765	<78286>	.STUD SHOULDERED.....		EA		2					*	96	
			5330-067-3358	AN6227B12	<88044>	.PACKING,PREFORMED.....		EA		3					*	96	75
P	D		5310-209-2401	S1565-61592	<78286>	.WASHER,RECESSED.....		EA		3					*	96	76
P	D		1650-302-3433	S1565-61562	<78286>	.CAP,END,HYDRAULIC SYSTEM....		EA		3					*	96	77
P	D		5310-209-6357	S1565-61675	<78286>	.WASHER,FLAT.....		EA		3					*	96	79
P	F		1560-567-1125	S1665-61526	<78286>	.ARM ASSEMBLY,INPUT.....		EA		3	*	*	*		*	96	80
						ATTACHING PARTS											
			5306-156-2542	AN174H17A	<88044>	.BOLT,MACHINE.....		HD		3	*	*	*		*	96	81
			5306-174-4116	AN174H17	<88044>	.BOLT,MACHINE.....		EA		3	*	*	*		*	96	
			5310-184-9001	AN960PD416L	<88044>	.WASHER,FLAT.....		HD		6	*	*	*		*	96	
			5310-187-2354	AN960PD416	<88044>	.WASHER,FLAT.....		HD		6	*	*	*		*	96	
			5310-877-5796	MS21044N4	<96906>	.NUT,SELF-LOCKING,HEXAGON....		EA		3	*	*	*		*	96	
			5310-167-1285	AN310-4	<88044>	.NUT,CASTELLATED,HEXAGON.....		HD		3	*	*	*		*	96	
			5315-234-1856	MS24665-155	<96906>	.PIN,COTTER.....		HD		3	*	*	*		*	96	
			5306-156-2541	AN174H16A	<88044>	.BOLT,MACHINE.....		EA		3	*	*	*		*	96	82
			5306-151-0334	AN174H16	<88044>	.BOLT,MACHINE.....		EA		3	*	*	*		*	96	
			5310-184-9001	AN960PD416L	<88044>	.WASHER,FLAT.....		HD		9	*	*	*		*	96	
			5310-187-2354	AN960PD416	<88044>	.WASHER,FLAT.....		HD		3	*	*	*		*	96	
			5310-877-5796	MS21044N4	<96906>	.NUT,SELF-LOCKING,HEXAGON....		EA		3	*	*	*		*	96	
			5310-167-1285	AN310-4	<88044>	.NUT,CASTELLATED HEXAGON.....		HD		3	*	*	*		*	96	
			5315-234-1856	MS24665-155	<96906>	.PIN,COTTER.....		HD		3	*	*	*		*	96	
						---*---											
			5310-275-0387	NAS509-6	<80205>	.NUT,PLAIN,HEXAGON.....		EA		2	*	*	*		*	96	83
			5310-527-4509	NAS513-6	<80205>	.WASHER,KEY.....		EA		2	*	*	*		*	96	84
P	F	U	3110-694-2785	S1665-61512-2	<78286>	.BEARING,BALL,ROD END.....		EA		1	*	*	*		*	96	85
P	F	U	3110-694-2785	S1665-61512-2	<78286>	.BEARING,BALL,ROD END.....		EA		1	*	*	*		REF	96	86
			5310-527-4509	NAS513-6	<80205>	.WASHER,KEY.....		EA		1	*	*	*		*	96	88
P	D		1650-996-2125	S1665-61651-1	<78286>	.SPACER,AUTOMATIC PILOT.....		EA		1					*	96	89
P	D		5310-550-3092	S1665-61651-3	<78286>	.WASHER,FLAT.....		EA		AR					REF	96	
P	D		1650-323-4932	S1665-61512-1	<78286>	.BEARING,BALL,ROD END.....		EA		1					*	96	91
						SYSTEM SERVO											
P	D		1650-699-4380	S1665-61687	<78286>	.BRACKET ASSEMBLY.....		EA		1					*	96	92
P	D		6615-652-4610	S1665-61687-3	<78286>	.BRACKET ASSEMBLY.....		EA		1					*	96	
P	D		1650-341-9774	S1665-61451	<78286>	.CAP ASSEMBLY RPLS.....		EA		3					*	96	93
						1650-302-9092											
P	D		1650-348-3688	S1665-61453	<78286>	..BEARING,SLEEVE.....		EA		1					*	96	94
P	D		1650-565-8502	S1665-61452	<78286>	..CAP,LINEAR ACTUATING.....		EA		1					*	96	95
			5330-171-5048	MS28782-12	<96906>	.RETAINER,PACKING.....		EA		3					*	96	97

(1) SOURCE, MAINT AND REC CODE (a) SOURCE CODE	(b) MAINT LEVEL	(c) REC CODE	(2) FEDERAL STOCK NUMBER	(3) DESCRIPTION REFERENCE NUMBER			MODELS USABLE ON CH-34C	(4) UNIT OF ISSUE	(5) QTY INC IN UNIT PACK	(6) QTY INC IN UNIT	(7) 30 DAY DS GS MAINT ALW (a) 1-20	(b) 21-50	(c) 51-100	(8) 1-YR ALW PER 100 EQUIP CNTGCY	(9) DEPOT MAINT ALW PER 100 EQUIP	(10) ILLUSTRATION (a) FIG NO	(b) ITEM NO
			5330-067-3358	AN6227B12	<88044>	.PACKING,PREFORMED.....		EA		3					*	96	98
			5330-171-5048	MS28782-12	<96906>	.RETAINER,PACKING.....		EA		3					*	96	99
			5330-171-6760	MS28782-24	<96906>	.RETAINER,PACKING.....		AV		3					*	96	100
						-ALTERNATE-											
				MS28774-24	<96906>	.RING,BACK-UP.....		EA		3						96	
			5330-579-7925	MS28775-219	<96906>	.PACKING,PREFORMED.....		EA		3					*	96	101
			5330-171-6760	MS28782-24	<96906>	.RETAINER,PACKING.....		AV		3					*	96	102
						-ALTERNATE-											
				MS28774-24	<96906>	.RING,BACK-UP.....		EA		3						96	
P	D		1560-541-9976	S1665-61572-3	<78286>	.SPACER,SLEEVE.....		EA		1					*	96	103
P	D		1560-541-9976	S1665-61572-3	<78286>	.SPACER,SLEEVE.....		EA		1					REF	96	
P	D		1560-541-9743	S1665-61572-1	<78286>	.SPACER,SLEEVE.....		EA		1					*	96	
P	D		1560-541-9975	S1665-61572-4	<78286>	.SPACER,SLEEVE.....		EA		1					*	96	104
P	D		1560-541-9975	S1665-61572-4	<78286>	.SPACER,SLEEVE.....		EA		1					REF	96	
P	D		6615-541-9753	S1665-61572-2	<78286>	.STOP.....		EA		1					*	96	
			5330-171-9225	MS28782-20	<96906>	.RETAINER,PACKING.....		EA		3					*	96	105
						-ALTERNATE-											
				MS28774-20	<96906>	.RETAINER,PACKING.....		EA		3						96	
			5330-579-7911	MS28775-215	<96906>	.PACKING,PREFORMED.....		EA		3					*	96	106
			5330-171-9225	MS28782-20	<96906>	.RETAINER,PACKER.....		EA		3					*	96	107
						-ALTERNATE-											
				MS28774-20	<96906>	.RING,BACK-UP.....		EA		3						96.	
P	D		1650-302-9093	S1665-61530	<78286>	.PISTON,LINEAR ACTUATING.....		EA		3					*	96	108
			5330-171-5047	MS28782-10	<96906>	.RETAINER,PACKING.....		AV		3					*	96	109
						-ALTERNATE-											
			5330-171-5044	MS28782-5	<96906>	.RETAINER,PACKING.....		AV		3						96	
			5330-350-9013	AN6227B10	<88044>	.PACKING,PREFORMED.....		EA		3					*	96	110
			5330-171-5047	MS28782-10	<96906>	.RETAINER,PACKING.....		AV		3					*	96	111
						-ALTERNATE-											
			5330-171-5044	MS28782-5	<96906>	.RETAINER,PACKING.....		AV		3					*	96	
			5330-350-9013	AN6227B10	<88044>	.PACKING,PREFORMED.....		EA		12					*	96	112
P	D		1650-862-5553	S1565-61680-4	<78286>	.SELECTOR SET,HYDRAULIC.....		EA		3					*	96	113
			5330-171-5075	MS28782-16	<96906>	.RETAINER,PACKING.....		EA		6					*	96	114
						-ALTERNATE-											
			5330-618-8893	MS28774-16	<96906>	.RETAINER,PACKING.....		EA		6						96	
			5330-559-6182	MS28775-211	<96906>	.PACKING,PREFORMED.....		EA		6					*	96	115
			5330-171-5075	MS28782-16	<96906>	.RETAINER,PACKING.....		EA		6					*	96	116
						-ALTERNATE-											
			5330-618-8893	MS28774-16	<96906>	.RETAINER,PACKING.....		EA		6						96	
			5330-171-5075	MS28782-16	<96906>	.RETAINER,PACKING.....		EA		3					*	96	117
						-ALTERNATE-											
			5330-618-8893	MS28774-16	<96906>	.RETAINER,PACKING.....		EA		6						96	
			5330-559-6182	MS28775-211	<96906>	.PACKING,PREFORMED.....		EA		3					*	96	118
P	D		1650-302-3436	S1565-61679	<78286>	.CYLINDER,AUTO PILOT.....		EA		3					*	96	119
P	D		1650-662-3599	S1565-61563	<78286>	.BEARING,SLEEVE.....		EA		3					*	96	120
			5330-298-3900	MS28782-6	<96906>	.RETAINER,PACKING.....		EA		6					*	96	121
						-ALTERNATE-											
			5330-171-6748	MS28782-2	<96906>	.RETAINER,PACKING.....		EA		6						96	
			5330-582-2133	MS28775-011	<96906>	.PACKING,PREFORMED.....		EA		6					*	96	122
			5330-298-3900	MS28782-6	<96906>	.RETAINER,PACKING.....		EA		6					*	96	123
						-ALTERNATE-											
			5330-171-6748	MS28782-2	<96906>	.RETAINER,PACKING.....		EA		6						96	

(1) SOURCE, MAINT AND REC CODE (a) SOURCE CODE	(b) MAINT CODE	(c) REC CODE	(2) FEDERAL STOCK NUMBER	REFERENCE NUMBER	(3) DESCRIPTION	MODELS USABLE ON CH-34C	(4) UNIT OF ISSUE	(5) QTY INC IN UNIT PACK	(6) QTY INC IN UNIT	(7) 30-DAY DS/GS MAINT ALW (a) 1-20	(b) 21-50	(c) 51-100	(8) 1-YR ALW PER 100 EQUIP CNTGCY	(9) DEPOT MAINT ALW PER 100 EQUIP	(10) ILLUSTRATION (a) FIG NO	(b) ITEM NO
P	D		1560-302-3434	S1565-61564	<78286> .TUBE,BY-PASS,HYDRAULIC.....		EA		3					*	96	124
			4730-684-6915	MS24392D8	<96906> .NIPPLE,TUBE.....		EA		1	*	*	REF	REF	*	96	125
			5330-808-0794	MS28778-8	<96906> .PACKING,PREFORMED.....		EA		1	REF	REF	REF		*	96	126
			4730-684-6915	MS24392D8	<96906> .NIPPLE,TUBE.....		EA		1	*	*	REF	REF	*	96	127
			5330-808-0794	MS28778-8	<96906> .PACKING,PREFORMED.....		EA		1	REF	REF	REF		*	96	128
			4730-834-9560	MS24392D4	<96906> .NIPPLE,TUBE.....		EA		1	REF	REF	REF	REF	*	96	129
			5330-808-0794	MS28778-8	<96906> .PACKING,PREFORMED.....		EA		1	REF	REF	REF		*	96	130
			4730-277-6352	AN932-1	<88044> .PLUG,PIPE.....		EA		1	*	*	*		*	96	131
			4730-278-3462	AN932-2	<88044> .PLUG,PIPE.....NOTE 1		EA		3	*	*	*		*	96	132
			4730-277-6352	AN932-1	<88044> .PLUG,PIPE.....		EA		3	*	*	*		*	96	133
P	D		5310-281-3146	RL31SB9	<83324> .RING,LOCK.....		EA		4					*	96	134
X2	F		5340-603-0372	RD207SB9	<83324> .INSERT.....		EA		4						96	135
P	D		1560-303-2590	S1665-61504	<78286> .END PLATE,HYDRAULIC SYSTEM..		EA		1					*	96	136
P	D		5310-341-9775	S1665-61454	<78286> .NUT,SERVO AUTOMATIC PILOT...		EA		3					*	96	137
			5330-171-7346	MS28782-26	<96906> .RETAINER,PACKING.....		EA		9					*	96	138
					-ALTERNATE-											
				MS28774-26	<96906> .RETAINER,PACKING.....		EA		9						96	
			5330-196-5314	AN6227-26	<88044> .PACKING,PREFORMED.....		EA		9					*	96	139
			5330-171-7346	MS28782-26	<96906> .RETAINER,PACKING.....		EA		9					*	96	140
					-ALTERNATE-											
				MS28774-26	<96906> .RETAINER,PACKING.....		EA		3						96	
			5330-171-5048	MS28782-12	<96906> .RETAINER,PACKING.....		EA		3					*	96	141
			5330-067-3358	AN6227B12	<88044> .PACKING,PREFORMED.....		EA		3					*	96	142
			5330-171-5048	MS28782-12	<96906> .RETAINER,PACKING.....		EA		3					*	96	143
				S1665-20029	<78286> .PLATE,IDENTIFICATION.....		EA		1						96	145
P	D		1650-341-9773	S1665-61450	<78286> .CYLINDER ASSEMBLY,SERVO.....		EA		3					30	96	146
AD	F			S1665-61650	<78286> .PLATE ASSEMBLY,SERVO UNIT...		EA		1						96	147
					SEE FIG.97 FOR BREAKDOWN											
					NOTE 1											
					COMPONENT OF KIT											
					1560-715-2262											
AD	F			S1665-61650	<78286> PLATE ASSEMBLY,SERVO UNIT....		EA								97	
					SEE FIG.96 FOR NHA											
P	D		1560-307-3580	S1565-61615	<78286> .PLUG,HYDRAULIC SYSTEM.....		EA		3					*	97	1
			4730-278-3462	AN932-2	<88044> .PLUG,PIPE.....NOTE 1		EA		1					*	97	2
			4730-277-6352	AN932-1	<88044> .PLUG,PIPE.....		EA		2					*	97	3
			4730-277-6371	AN6289D4	<88044> .LOCKNUT,TUBE FITTING.....		EA		1					*	97	4
			5330-186-4947	MS28777-4	<96906> .WASHER,NONMETALLIC.....		LL		1					*	97	5
			5330-805-2966	MS28778-4	<96906> .PACKING,PREFORMED.....		EA		1					*	97	6
			4730-725-4351	MS24394D4	<96906> .ELBOW,TUBE.....		EA		1					*	97	7
AD	D			S1665-61622	<78286> .LEVER,MECHANICAL.....		EA		3						97	8
					ATTACHING PARTS											
			5306-285-3934	NAS464-4A32	<80205> .BOLT,SHEAR.....		EA		1					*	97	9
			5310-184-9001	AN960PD416L	<88044> .WASHER,FLAT.....		HD		2					*	97	
			5310-543-4443	MS20364-428A	<96906> .NUT,SELF-LOCKING,HEXAGON....		HD		1					*	97	
					---*---											

(1) SOURCE, MAINT AND REC CODE (a) SOURCE CODE	(b) MAINT LEVEL	(c) REC CODE	(2) FEDERAL STOCK NUMBER	REFERENCE NUMBER		(3) DESCRIPTION	MODELS USABLE ON CH-34C	(4) UNIT OF ISSUE	(5) QTY INC IN UNIT PACK	(6) QTY INC IN UNIT	(7) 30-DAY DS GS MAINT ALW (a) 1-20	(b) 21-50	(c) 51-100	(8) 1-YR ALW PER 100 EQUIP CNTGCY	(9) DEPOT MAINT ALW PER 100 EQUIP	(10) ILLUSTRATION (a) FIG NO	(b) ITEM NO
			3120-525-1487	S1565-61614	<83369>	..BEARING,ROLLER,NEEDLE.....										97	
						RPL-BY 3110-159-1652											
P	D		3110-159-1652	PN4AANG25	<60380>	..BEARING,ROLLER,NEEDLE.....		EA		2					25	97	10
						RPLS-- 3120-525-1487											
P	D		3110-142-4461	AN200KP4	<88044>	..BEARING,BALL,AIRFRAME.....		EA		1					REF	97	11
P	D		1560-566-2426	S1665-61623	<78286>	..SERVO FORK,HYDRAULIC VALVE.		EA		3					25	97	12
P	D		3110-227-2800	NAS505-4	<80205>	.BEARING,BALL,NEEDLE.....		EA		3					20	97	13
P	D		5310-209-4732	S1665-61626	<78286>	.WASHER,FLAT.....		EA		6					25	97	14
			5310-543-4443	MS20364-428A	<96906>	.NUT,SELF-LOCKING,HEXAGON....		HD		6					*	97	15
P	D		5307-638-9575	S1665-61625	<78286>	.STUD,SHOULDERED.....		EA		3					*	97	16
P	D		1560-303-2591	S1665-61537	<78286>	.CAM ASSEMBLY,HYDRAULIC.....		EA		3					*	97	17
P	D		5315-290-9168	S1565-61616	<78286>	.KEY,MACHINE.....		EA		3					*	97	18
P	D		1560-336-1645	S1665-61620	<78286>	.LINK ASSEMBLY,HYDRAULIC.....		EA		3					*	97	19
			5340-804-9740	MS16625-1081	<96906>	..RING,RETAINING.....		EA		2					*	97	20
P	D		3110-142-4464	MS20201KP5A	<96906>	..BEARING,BALL,AIRFRAME.....		EA		2					REF	97	21
			5340-803-7303	MS9013-19	<96906>	.RING,RETAINING.....		EA		1					*	97	25
P	D		5310-209-2414	S1565-61617	<78286>	.WASHER,RECESSED.....		EA		1					*	97	26
P	D		3110-142-4326	B539	<21335>	.BEARING,BALL,AIRFRAME.....		EA		1					*	97	27
P	D		1560-334-6428	S1665-61507	<78286>	.LEVER ASSEMBLY,AUTO PILOT...		EA		1					*	97	29
						ATTACHING PARTS											
			5315-198-8097	AN386-1-9A	<88044>	.PIN,TAPERED,THREADED.....		EA		1					*	97	30
			5310-167-0685	AN975-3	<88044>	.WASHER,RECESSED.....		HD		1					*	97	
			5310-807-1467	MS21042-3	<96906>	.NUT,SELF-LOCKING,HEXAGON....				1					*	97	
						---*---											
P	D		3110-142-4314	AN200KS4	<88044>	..BEARING,BALL,AIRFRAME.....		EA		1					*	97	31
P	D		1650-516-1248	S1665-61511	<78286>	.BEARING,SLEEVE.....		EA		1					*	97	32
P	D		3110-112-6012	BR12120H	<60380>	.BEARING,ROLLER,NEEDLE.....		EA		1					*	97	33
P	D		1650-516-1251	S1665-61529	<78286>	.BEARING,SLEEVE.....		EA		1					*	97	34
			5330-579-8156	MS28775-212	<96906>	.PACKING,PREFORMED.....		EA		1					*	97	35
			5330-171-7379	MS28782-17	<96906>	.RETAINER,PACKING.....		EA		1					*	97	36
			5330-579-8156	MS28775-212	<96906>	.PACKING,PREFORMED.....		EA		1					*	97	37
			5330-579-8156	MS28775-212	<96906>	.PACKING,PREFORMED.....		EA		1					*	97	38
			5330-171-7379	MS28782-17	<96906>	.RETAINER,PACKING.....		EA		1					*	97	39
			5330-579-8156	MS28775-212	<96906>	.PACKING,PREFORMED.....		EA		1					*	97	40
			5330-171-7379	MS28782-17	<96906>	.RETAINER,PACKING.....		EA		1					*	97	41
			5330-579-8156	MS28775-212	<96906>	.PACKING,PREFORMED.....		EA		1					*	97	42
			5330-579-8156	MS28775-212	<96906>	.PACKING,PREFORMED.....		EA		1					*	97	43
			5330-171-7379	MS28782-17	<96906>	.RETAINER,PACKING.....		EA		1					*	97	44
			5330-579-8156	MS28775-212	<96906>	.PACKING,PREFORMED.....		EA		1					*	97	45
			5330-171-7379	MS28782-17	<96906>	.RETAINER,PACKING.....		EA		1					*	97	46
			5330-579-8156	MS28775-212	<96906>	.PACKING,PREFORMED.....		EA		1					*	97	47
			5330-579-8156	MS28775-212	<96906>	.PACKING,PREFORMED.....		EA		1					*	97	48
			5330-171-7379	MS28782-17	<96906>	.RETAINER,PACKING.....		EA		1					*	97	49
			5330-582-2855	MS28775-113	<96906>	.PACKING,PREFORMED.....		EA		6					*	97	50
			5330-171-5889	MS28782-11	<96906>	.RETAINER,PACKING.....		AV		6					*	97	51
P	D		1560-301-3567	S1665-61506	<78286>	.SHAFT SUBASSEMBLY,PLATE.....		EA		1					*	97	52
P	D	R	1650-565-8503	S1665-61503	<78286>	.HOUSING,SERO CYLINDER.....		EA		1					*	97	53
P	D		1650-662-4941	S1665-61624	<78286>	..BEARING,SLEEVE.....		EA		6					*	97	54

(1) SOURCE, MAINT AND REC CODE (a) SOURCE CODE	(b) MAINT LEVEL	(c) REC CODE	(2) FEDERAL STOCK NUMBER	REFERENCE NUMBER		(3) DESCRIPTION	MODELS USABLE ON CH-34C	(4) UNIT OF ISSUE	(5) QTY INC IN UNIT PACK	(6) QTY INC IN UNIT	(7) 30-DAY DS GS MAINT ALW (a) 1-20	(b) 21-50	(c) 51-100	(8) 1-YR ALW PER 100 EQUIP CNTGCY	(9) DEPOT MAINT ALW PER 100 EQUIP	(10) ILLUSTRATION (a) FIG NO	(b) ITEM NO
				S1665-20001	<78286>	MAIN ROTOR SERVO CONTROLS.... INSTALLATION SEE FIG.87 FOR NHA		EA								98	
AF	F	R		S1665-20002-1	<78286>	.SERVO AND ARM ASSEMBLY,..... MAIN ROTOR,AFT-RH ATTACHING PARTS		EA		1						98	
			5306-151-3705	AN176-15	<88044>	.BOLT,MACHINE.....		EA		1	*	*	*		*	98	1
			5310-187-2395	AN960PD616L	<88044>	.WASHER,FLAT.....		HD		2	*	*	*		*	98	
			5310-950-0039	MS21044N6	<96906>	.NUT,SELF-LOCKING,HEXAGON....		HD		1	*	*	*		*	98	
			5306-275-9562	AN175H21	<88044>	.BOLT,MACHINE.....		EA		1	*	*	*		*	98	2
			5310-088-0553	MS21044N5	<96906>	.NUT,SELF-LOCKING,HEXAGON....		HD		1	*	*	*		*	98	
P	F		1560-662-7507	S1665-20048	<78286>	.BEARING,SLEEVE..... ---*---		EA		2	3	7	14		*	98	3
P	F		1650-302-9087	S1665-20050-1	<78286>	..ARM ASSEMBLY,CONTROL,AFT... RH RPLS-- 1560-323-4361 ATTACHING PARTS		EA		1	*	*	*		*	98	4
P	F		5310-209-3820	S1665-20056	<78286>	..WASHER,FLAT.....		EA		2	2	6	12		*	98	5
			5310-167-0820	AN960-516	<88044>	..WASHER,FLAT.....		HD		2	*	*	*		*	98	
P	F		5310-551-7690	S1665-20099	<78286>	..WASHER,SHOULDERED.....		EA		2	2	3	5		*	98	
			5310-088-0553	MS21044N5	<96906>	..NUT,SELF-LOCKING,HEXAGON... ---*---		HD		2	*	*	*		*	98	
P	F		1650-310-1425	S1665-20052	<78286>	...FITTING ASSEMBLY..... ATTACHING PARTS		EA		2	*	*	*		*	98	
			5306-285-5326	AN174H11A	<88044>	...BOLT,MACHINE.....		EA		6	*	*	*		*	98	6
			5310-184-9001	AN960PD416L	<88044>	...WASHER,FLAT.....		HD		12	*	*	*		*	98	
			5310-877-5796	MS21044N4	<96906>	...NUT,SELF-LOCKING,HEXAGON.. ---*---		EA		6	*	*	*		*	98	
P	F		3110-142-4316	KS6A	<21335>	....BEARING,BALL,AIRFRAME....		EA		1	*	*	*		*	98	7
P	F			S1665-20052-1	<78286>	....FITTING.....		EA		1						98	8
P	F		3110-516-5763	REP4M6FS210	<21335>	...BEARING,BALL,ROD END..... OBSLTS 3110-839-3976		EA		1	*	*	*		REF	98	9
			5310-275-0387	NAS509-6	<80205>	...NUT,PLAIN,HEXAGON.....		EA		1	*	*	*		*	98	10
X2	F		1650-310-1426	S1665-20057	<78286>	...FITTING,MAIN ROTOR..... ATTACHING PARTS		EA		1	*	2	2		*	98	11
			5306-285-5326	AN174H11A	<88044>	...BOLT,MACHINE.....		EA		4	*	*	*		*	98	12
			5310-184-9001	AN960PD416L	<88044>	...WASHER,FLAT.....		HD		8	*	*	*		*	98	
		R	1650-332-7207	S1665-20003	<78286>	..SERVO UNIT ASSEMBLY,MAIN... ROTOR RPL-BY 1650-672-4829										98	
P	F	R	1650-672-4829	S1665-20003-1	<78286>	..SERVO UNIT ASSEMBLY,MAIN... ROTOR RPLS-- 1650-332-7207 SEE FIG. 100 FOR BREAKDOWN		EA		1	2	6	11	132	*	98	13
AF	F	R		S1665-20002-2	<78286>	.SERVO AND ARM ASSEMBLY,..... MAIN ROTOR		EA		1						98	
AF	F	R		S1665-20002-3	<78286>	.SERVO AND ARM ASSEMBLY,..... MAIN ROTOR ATTACHING PARTS		EA		1						98	
			5306-151-3705	AN176-15	<88044>	.BOLT,MACHINE.....		EA		2	*	*	*		*	98	14
			5310-187-2395	AN960PD616L	<88044>	.WASHER,FLAT.....		HD		4	*	*	*		*	98	
			5310-950-0039	MS21044N6	<96906>	.NUT,SELF-LOCKING,HEXAGON....		HD		2	*	*	*		*	98	
			5306-275-9562	AN175H21	<88044>	.BOLT,MACHINE.....		EA		2	*	*	*		*	98	15

(1) SOURCE, MAINT AND REC CODE (a) SOURCE CODE	(b) MAINT LEVEL	(c) REC CODE	(2) FEDERAL STOCK NUMBER	REFERENCE NUMBER		(3) DESCRIPTION	MODELS USABLE ON CH-34C	(4) UNIT OF ISSUE	(5) QTY INC IN UNIT PACK	(6) QTY INC IN UNIT	(7) 30-DAY DS GS MAINT ALW (a) 1-20	(b) 21-50	(c) 51-100	(8) 1-YR ALW PER 100 EQUIP CNTGCY	(9) DEPOT MAINT ALW PER 100 EQUIP	(10) ILLUSTRATION (a) FIG NO	(b) ITEM NO
			5310-088-0553	MS21044N5	<96906>	.NUT,SELF-LOCKING,HEXAGON....		HD		2	*	*	*		*	98	
P	F		1560-662-7507	S1665-20048	<78286>	.BEARING,SLEEVE.....		EA		4	REF	REF	REF		REF	98	16
						---*---											
				S1665-20090-2	<78286>	..ARM ASSEMBLY,MAIN ROTOR.... RPL-BY 1650-302-9088										98	
			1560-575-1117	S1665-20050-3	<78286>	..ARM ASSEMBLY,MAIN ROTOR.... RPL-BY 1650-302-9088										98	
P	F		1650-302-9088	S1665-20050-2	<78286>	..ARM ASSEMBLY,MAIN ROTOR.... RPLS-- 1560-323-4362, 1560-575-1117 ATTACHING PARTS		EA		1	*	REF	REF		*	98	17
P	F		5310-209-3820	S1665-20056	<78286>	..WASHER,FLAT.....		EA		4	REF	REF	REF		REF	98	18
			5310-167-0820	AN960-516	<88044>	..WASHER,FLAT.....		HD		4	*	*	*		*	98	
			5310-088-0553	MS21044N5	<96906>	..NUT,SELF-LOCKING,HEXAGON...		HD		2	*	*	*		*	98	
						---*---											
P	F		1650-310-1425	S1665-20052	<78286>	...FITTING ASSEMBLY..... ATTACHING PARTS		EA		2	*	*	*		*	98	
			5306-285-5326	AN174H11A	<88044>	...BOLT,MACHINE.....		EA		6	*	*	*		*	98	19
			5310-184-9001	AN960PD416L	<88044>	...WASHER,FLAT.....		HD		12	*	*	*		*	98	
			5310-877-5796	MS21044N4	<96906>	...NUT,SELF-LOCKING,HEXAGON..		EA		6	*	*	*		*	98	
						---*---											
P	F		3110-142-4316	KS6A	<21335>	....BEARING,BALL,AIRFRAME....		EA		1	*	*	*		REF	98	20
X1				S1665-20052-1	<78286>	....FITTING.....		EA		1						98	21
P	F		3110-516-5763	REP4M6FS210	<21335>	...BEARING,BALL,ROD END..... OBSLTS 3110-839-3976		EA		1	*	*	*		REF	98	22
			5310-275-0387	NAS509-6	<80205>	...NUT,PLAIN,HEXAGON.....		EA		1	*	*	*		*	98	23
X2	F		1650-692-2633	S1665-20054	<78286>	...FITTING,HYDRAULIC SYSTEM.. ATTACHING PARTS		EA		1	*	*	*		*	98	24
			5306-285-5326	AN174H11A	<88044>	...BOLT,MACHINE.....		EA		4	*	*	*		*	98	25
			5310-184-9001	AN960PD416L	<88044>	...WASHER,FLAT.....		HD		8	*	*	*		*	98	
			5310-877-5796	MS21044N4	<96906>	...NUT,SELF-LOCKING,HEXAGON..		EA		4	*	*	*		*	98	
						---*---											
P	F	T	1650-672-4829	S1665-20003-1	<78286>	..SERVO UNIT ASSEMBLY,MAIN... ROTOR RPLS-- 1650-332-7207 SEE FIG. 100 FOR BREAKDOWN		EA		1	REF	REF	REF	REF	REF	98	26
				S1665-20001	<78286>	MAIN ROTOR SERVO CONTROLS.... INSTALLATION SEE FIG.87 FOR NHA		EA								99	
AF	F	R		S1665-20002-1	<78286>	.SERVO AND ARM ASSEMBLY,..... MAIN ROTOR,AFT-RH		EA		1						99	
AF	F	R		S1665-20002-2	<78286>	.SERVO AND ARM ASSEMBLY,..... MAIN ROTOR,FORWARD-LH		EA		1						99	
AF	F	R		S1665-20002-3	<78286>	.SERVO AND ARM ASSEMBLY,..... MAIN ROTOR,FORWARD-RH ATTACHING PARTS		EA		1						99	

(1) SOURCE, MAINT AND REC CODE (a) SOURCE CODE	(b) MAINT LEVEL	(c) REC CODE	(2) FEDERAL STOCK NUMBER	REFERENCE NUMBER		(3) DESCRIPTION	MODELS USABLE ON CH-34C	(4) UNIT OF ISSUE	(5) QTY INC IN UNIT PACK	(6) QTY INC IN UNIT	(7) 30-DAY DS/GS MAINT ALW (c) 1-20	(b) 21-50	(c) 51-100	(8) 1-YR ALW PER 100 EQUIP CNTGCY	(9) DEPOT MAINT ALW PER 100 EQUIP	(10) ILLUSTRATION (a) FIG NO	(b) ITEM NO
			5306-151-3705	AN176-15	<88044>	.BOLT,MACHINE.....		EA		1	*	*	*		*	99	1
			5310-187-2395	AN960PD616L	<88044>	.WASHER,FLAT.....		HD		2	*	*	*		*	99	
			5310-950-0039	MS21044N6	<96906>	.NUT,SELF-LOCKING,HEXAGON....		HD		1	*	*	*		*	99	
			5306-275-9562	AN175H21	<88044>	.BOLT,MACHINE.....		EA		1	*	*	*		*	99	2
			5310-088-0553	MS21044N5	<96906>	.NUT,SELF-LOCKING,HEXAGON....		HD		1	*	*	*		*	99	
P	F		1560-662-7507	S1665-20048	<78286>	.BEARING,SLEEVE.....		EA		2	REF	REF	REF		REF	99	3
						---*---											
			1560-323-4361	S1665-20090-1	<78286>	..ARM ASSEMBLY,CONTROL,AFT... RH RPL-BY 1650-302-9087										99	
P	F		1650-302-9087	S1665-20050-1	<78286>	..ARM ASSEMBLY,CONTROL,AFT... RH RPLS-- 1560-323-4361		EA		1	*	*	*		REF	99	
P	F		1650-302-9088	S1665-20050-2	<78286>	..ARM ASSEMBLY,MAIN ROTOR,... FORWARD-RH RPLS-- 1560-575-1117		EA		1	*	REF	REF		REF	99	
						ATTACHING PARTS											
P	F		5310-209-3820	S1665-20056	<78286>	..WASHER,FLAT.....		EA		2	REF	REF	REF		REF	99	4
			5310-167-0820	AN960-516	<88044>	..WASHER,FLAT.....		HD		2	*	*	*		*	99	
			5310-088-0553	MS21044N5	<96906>	..NUT,SELF-LOCKING,HEXAGON...		HD		2	*	*	*		*	99	4A
						---*---											
P	F		3110-142-4316	KS6A	<21335>	...BEARING,BALL,AIRFRAME.....		EA		2	*	*	*		REF	99	5
P	F		3110-516-5763	REP4M6FS210	<21335>	...BEARING,BALL,ROD END..... OBSLTS 3110-839-3976		EA		1	*	*	*		REF	99	6
			5310-275-0387	NAS509-6	<80205>	...NUT,PLAIN,HEXAGON.....		EA		1	*	*	*		*	99	7
			1650-573-7438	S1665-20092-4	<78286>	...ROD,CONTROL ARM.....NOTE 1 NOTE 2		EA		1	*	*	*			99	8
P	F		1650-573-7437	S1665-20092-3	<78286>	...ROD,CONTROL ARM..... NOTE 1 NOTE 2		EA		1	*	*	*			99	
						ATTACHING PARTS											
			5310-550-3071	S1665-20098	<78286>	...WASHER,FLAT.....NOTE 1 NOTE 2		EA		1	*	*	*			99	9
			5310-596-1766	MS20002C4	<96906>	...WASHER,RECESSED.....		HD		4	*	*	*		*	99	
			5310-187-2354	AN960PD416	<88044>	...WASHER,FLAT.....		HD		4	*	*	*		*	99	
			5310-877-5796	MS21044N4	<96906>	...NUT,SELF-LOCKING,HEXAGON..		EA		4	*	*	*		*	99	
P	F	T	1650-672-4829	S1665-20003-1	<78286>	..SERVO UNIT ASSEMBLY,MAIN... ROTOR RPLS-- 1650-332-7207 SEE FIG. 100 FOR BREAKDOWN		EA		1	REF	REF	REF	REF	REF	99	12
						NOTE 1 USE UNTIL EXHAUSTED,NO REPLACEMENT NOTE 2 U/O PN S1665-20090 SERIES ARM ASSEMBLIES ONLY											
						SERVO UNIT ASSEMBLY,MAIN..... ROTOR										100	

(1) SOURCE, MAINT AND REC CODE (a) SOURCE CODE	(b) MAINT LEVEL	(c) REC CODE	(2) FEDERAL STOCK NUMBER	REFERENCE NUMBER		(3) DESCRIPTION	MODELS USABLE ON CH-34C	(4) UNIT OF ISSUE	(5) QTY INC IN UNIT PACK	(6) QTY INC IN UNIT	(7) 30-DAY DS GS MAINT ALW (a) 1-20	(b) 21-50	(c) 51-100	(8) 1-YR ALW PER 100 EQUIP CNTGCY	(9) DEPOT MAINT ALW PER 100 EQUIP	(10) ILLUSTRATION (a) FIG NO	(b) ITEM NO
P	F	T	1650-672-4829	S1665-20003-1	<78286>	SERVO UNIT ASSEMBLY,MAIN..... ROTOR RPLS-- 1650-332-7207 SEE FIG.98 & 99 FOR NHA		EA			REF	REF	REF	REF		100	
P	H		5306-302-9083	S1665-20012	<78286>	.BOLT,SHOULDER.....		EA		1	*	*	*		*	100	1
			5330-227-9483	AN6227B9	<88044>	.PACKING,PREFORMED.....		EA		1	*	*	*		*	100	2
P	H		5306-302-9084	S1665-20013	<78286>	.BOLT,HYDRAULIC SYSTEM.....		EA		1	*	*	*		*	100	3
			5330-227-9483	AN6227B9	<88044>	.PACKING,PREFORMED.....		EA		1	*	*	*		*	100	4
P	H		1650-096-5355	S1665-20021	<78286>	.COVER ASSEMBLY,HYDRAULIC....		EA		1	*	*	*		*	100	5
P	F		1650-302-9085	S1665-20017	<78286>	.CONNECTING LINK..... ATTACHING PARTS		EA		1	*	*	*		*	100	6
			5306-292-8282	AN173H7A	<88044>	.BOLT,MACHINE.....		EA		2	*	*	*		*	100	7
			5310-183-4406	AN960PD10	<88044>	.WASHER,FLAT.....		HD		4	*	*	*		*	100	
			5310-877-5797	MS21044N3	<96906>	.NUT,SELF-LOCKING,HEXAGON....		EA		2	*	*	*		*	100	
						---*---											
			1650-096-5352	S1665-20016	<78286>	.RING ASSEMBLY.....										100	
P	D		1560-658-2924	S1665-20016-3	<78286>	.RING ASSEMBLY.....		EA		1					*	100	8
			1650-096-5351	S1665-20010	<78286>	.YOKE ASSEMBLY.....										100	
P	H		1650-673-3946	S1665-20010-1	<78286>	.YOKE ASSEMBLY.....		EA		2	*	2	2		*	100	9
X1			1650-516-1266	S1665-20014	<78286>	..BEARING,SLEEVE.....		EA		1						100	10
P	H		1650-516-1267	S1665-20015	<78286>	..BEARING,SLEEVE.....		EA		1	*	*	*		*	100	11
X1				S1665-20055	<78286>	..BOLT,SHOULDER WHEN EXHTD.. RQTN NHA 1560-711-4593		EA		2						100	12
			1560-653-4308	S14-40-5054-2	<78286>	.BOOT RPL-BY 1650-671-1923..										100	
P	O		1650-671-1923	SS2932	<78286>	.BOOT,SERVO UNIT RPLS-..... 1560-653-4308, 1650-394-0150		EA		1	8	20	39		*	100	14
			5325-276-6228	AN931-5-9	<88044>	.GROMMET,RUBBER.....NOTE 2		LL		1	*	*	*		*	100	15
P	F		3110-173-5072	AN951REB3N	<88044>	.BEARING,BALL,ROD END.....		EA		1	*	*	*		*	100	16
P	F		5340-346-2213	S14-40-5194	<78286>	.CLAMP,LOOP.....NOTE 2		EA		1	*	*	*		*	100	17
P	F		1560-565-7318	S1665-20035	<78286>	.WASHER,KEY.....		EA		1	*	*	2		*	100	18
			5310-141-3010	NAS509-4	<80205>	.NUT,PLAIN,HEXAGON.....NOTE 2		EA		1	*	*	*		*	100	19
			1650-315-6384	S14-40-5131-1	<78286>	.BOOT,TAIL ROTOR RPL-BY..... 1560-886-5981										100	
			1560-673-3945	S14-40-5131-3	<78286>	.BOOT,TAIL ROTOR RPL-BY..... 1560-886-5981										100	
P	O		1560-886-5981	SS2945	<78286>	.BOOT,TAIL ROTOR SERVO..... RPLS-- 1560-673-3945, 1650-302-3431, 1650-315-6384,& 1650-627-2040 NOTE 1		EA		1	5	14	27		*	100	20
P	H		1650-302-9086	S1665-20023	<78286>	.CAP,LINEAR.....		EA		1	*	*	*		*	100	21
			5330-350-9013	AN6227B10	<88044>	.PACKING,PREFORMED.....		EA		1					*	100	22
			5330-171-5047	MS28782-10	<96906>	.RETAINER,PACKING.....		AV		1					*	100	23
			5330-171-5047	MS28782-10	<96906>	.RETAINER,PACKING.....		AV		1					*	100	24
			5330-350-9013	AN6227B10	<88044>	.PACKING,PREFORMED.....		EA		1					*	100	25
			5330-350-9013	AN6227B10	<88044>	.PACKING,PREFORMED.....		EA		1					*	100	26
			5330-350-9013	AN6227B10	<88044>	.PACKING,PREFORMED.....		EA		1					*	100	27
			5330-350-9013	AN6227B10	<88044>	.PACKING,PREFORMED.....		EA		1					*	100	28
			5330-171-5047	MS28782-10	<96906>	.RETAINER,PACKING.....		AV		1					*	100	29
			1650-096-5350	S1665-20009	<78286>	.SELECTOR SET,HYRAULIC..... NOTE 2		EA		1						100	30

(1) SOURCE, MAINT AND REC CODE (a) SOURCE CODE	(b) MAINT LEVEL	(c) REC CODE	(2) FEDERAL STOCK NUMBER	REFERENCE NUMBER	(3) DESCRIPTION	MODELS USABLE ON CH-34C	(4) UNIT OF ISSUE	(5) QTY INC IN UNIT PACK	(6) QTY INC IN UNIT	(7) 30-DAY DS/GS MAINT ALW (a) 1-20	(b) 21-50	(c) 51-100	(8) 1-YR ALW PER 100 EQUIP CNTGCY	(9) DEPOT MAINT ALW PER 100 EQUIP	(10) ILLUSTRATION (a) FIG NO	(b) ITEM NO
			5305-145-7012	AN503-8-12 <88044>	.SCREW,MACHINE.....		HD		6					*	100	31
			5310-184-8966	AN960PD8 <88044>	.WASHER,FLAT.....NOTE 2		HD		12					*	100	
			5310-811-3494	MS21044N08 <96906>	.NUT,SELF-LOCKING,HEXAGON....		EA		6					*	100	
			5330-579-3163	MS28775-214 <96906>	.PACKING,PREFORMED.....		EA		1					*	100	32
			5330-579-3163	MS28775-214 <96906>	.PACKING,PREFORMED.....		EA		1					*	100	33
			5330-171-7380	MS28782-19 <96906>	.RETAINER,PACKING.....		EA		1					*	100	34
			5330-171-7380	MS28782-19 <96906>	.RETAINER,PACKING.....		EA		1					*	100	35
			5330-171-5889	MS28782-11 <96906>	.RETAINER,PACKING.....		AV		1					*	100	36
			5330-582-2855	MS28775-113 <96906>	.PACKING,PREFORMED.....		EA		1					*	100	37
			5330-171-5889	MS28782-11 <96906>	.RETAINER,PACKING.....		AV		1					*	100	38
			5330-530-4341	AN632-1 <88044>	.PACKING.....NOTE 1		EA		1						100	39
			1650-096-5348	S1665-20007 <78286>	.HEADLINER ACTUATOR....NOTE 2		EA		1						100	40
P	F		1560-523-4943	S1665-20038 <78286>	..BUSHING,SLEEVE.....		EA		2					*	100	41
P	D		5310-382-6607	RL38S89 <83324>	..RING,LOCK,SERRATED.....		EA		2					*	100	42
P	D		5340-200-4192	RD208SB10 <83324>	..INSERT,SCREW THREAD.....		EA		2					*	100	43
P	D		1650-692-2330	S14-40-5008 <78286>	..SEAL,END CAP,SERVO UNIT....		EA		1					*	100	44
P	F	U	3110-592-2159	S1665-20024 <78286>	.BEARING,ROLLER,ROD END.....		EA		1					*	100	45
			5310-141-3009	NAS509-8 <80205>	.NUT,PLAIN,HEXAGON.....NOTE 2		EA		1	*	*	*		*	100	46
			5340-574-6018	NAS559-3 <80205>	.LOCK,ROD END.....NOTE 2		EA		1	*	*	*		*	100	47
			5330-584-1038	MS28775-213 <96906>	.PACKING,PREFORMED.....		EA		1	2	4	7		*	100	48
			5330-171-6746	MS28782-18 <96906>	.RETAINER,PACKING.....		EA		1					*	100	49
			5330-171-6746	MS28782-18 <96906>	.RETAINER,PACKING.....		EA		1					*	100	50
P	H		1650-096-5349	S1665-20008 <78286>	.PISTON,HYDRAULIC.....		EA		1	*	2	2		*	100	51
P	H		5340-598-2082	S14-40-5009 <78286>	.RING,RETAINING.....		EA		1	*	*	2		*	100	52
P	F		5340-814-9965	S1665-20022 <78286>	.WASHER,FLAT.....		EA		1	*	2	2		*	100	53
			1650-640-8541	MS28776-2 <96906>	.RING,WIPER.....		EA		1	2	2	5		*	100	54
			5330-530-4341	AN6232-1 <88044>	.PACKING.....NOTE 1		EA		1	*	*	*		*	100	55
			5330-582-2655	MS28775-113 <96906>	.PACKING,PREFORMED.....		EA		1					*	100	56
			5330-171-5889	MS28782-11 <96906>	.RETAINER,PACKING.....		AV		1					*	100	57
			5330-171-5889	MS28782-11 <96906>	.RETAINER,PACKING.....		AV		1					*	100	58
MD	D			S1665-20029 <78286>	.PLATE,IDENTIFICATION.....		EA		1						100	59
P	D		1650-096-5347	S1665-20005 <78286>	...HOUSING,SERVO CYLINDER....		EA		1					*	100	60
			4730-278-3462	AN932-2 <88044>	..PLUG,PIPE.....NOTE 3		EA		5					*	100	61
P	D		4730-096-5353	S1665-20018 <78286>	..BOLT FLUID PASSAGE.....		EA		1					20	100	62
			5330-805-2966	MS28778-4 <96906>	..PACKING,PREFORMED.....		EA		1					*	100	63
P	D		1650-096-5354	S1665-20019 <78286>	..PISTON.....		EA		1					20	100	64
P	D		1650-521-3838	S14-40-5039 <78286>	..SPRING,FLIGHT CONTROL.....		EA		1					*	100	65
P	D		1650-523-4942	S1665-20020 <78286>	..BEARING SLEEVE.....		EA		1					20	100	66
				S1665-20004 <78286>	..HOUSING.....		EA		1						100	67
P	H		1560-715-2267	S1607-6528-1 <78286>	PARTS KIT,PRIMARY SERVO U/O. 1560-672-4829 SEE FUNCTIONAL GROUP 50 FOR COMPONENTS		EA		1	2	3	6		*	100	
P	H		1560-715-2268	S1607-6528-2 <78286>	PARTS KIT,MAIN ROTOR U/O.... 1560-672-4829 SEE FUNCTIONAL GROUP 50 FOR COMPONENTS		EA		1	2	6	11		*	100	
					NOTE 1 COMPONENT OF KIT 1560-715-2268											
					NOTE 2 COMPONENT OF KIT											

(1) SOURCE, MAINT AND REC CODE (a) SOURCE CODE	(b) MAINT LEVEL	(c) REC CODE	(2) FEDERAL STOCK NUMBER	REFERENCE NUMBER	(3) DESCRIPTION	MODELS USABLE ON CH-34C	(4) UNIT OF ISSUE	(5) QTY INC IN UNIT PACK	(6) QTY INC IN UNIT	(7) 30-DAY DS GS MAINT ALW (a) 1-20	(b) 21-50	(c) 51-100	(8) 1-YR ALW PER 100 EQUIP CNTGCY	(9) DEPOT MAINT ALW PER 100 EQUIP	(10) ILLUSTRATION (a) FIG NO	(b) ITEM NO
					CONTINUED										100	
					1560-715-2267											
					NOTE 3											
					COMPONENT OF KIT											
					1560-715-2262											
				S1640-62600-1 <78286>	FORWARD DIRECTIONAL.....		EA								101	
					CONTROLS INSTALLATION SEE											
					FIG.86 FOR NHA											
			1560-334-6414	S1640-64009-5 <78286>	.ROD ASSEMBLY RPL-BY.....										101	
					1560-633-4389											
P	F		1560-633-4389	S1640-64009-10 <78286>	.ROD ASSEMBLY RPLS--.....		EA		1	*	*	*		*	101	1
					1560-334-6414											
					ATTACHING PARTS											
			5306-206-6370	NAS464-4-18 <80205>	.BOLT,SHEAR.....		EA		1	*	*	*		*	101	2
			5310-187-2354	AN960PD416 <88044>	.WASHER,FLAT.....		HD		2	*	*	*		*	101	
			5310-176-8108	AN320-4 <88044>	.NUT,SLOTTED,HEXAGON.....		HD		1	*	*	*		*	101	
			5315-234-1856	MS24665-155 <96906>	.PIN,COTTER.....		HD		1	*	*	*		*	101	
X2	F			NAS464-4-29 <80205>	.BOLT,SHEAR.....		EA		1						101	3
			5310-184-9001	AN960PD416L <88044>	.WASHER,FLAT.....		HD		2	*	*	*		*	101	
			5310-176-8108	AN320-4 <88044>	.NUT,SLOTTED,HEXAGON.....		HD		1	*	*	*		*	101	
			5315-234-1856	MS24665-155 <96906>	.PIN,COTTER.....		HD		1	*	*	*		*	101	
					---*---											
			1560-334-6415	S1640-64009-6 <78286>	.ROD ASSEMBLY RPL-BY.....										101	
					1560-632-2845											
P	F		1560-632-2845	S1640-64009-11 <78286>	.ROD ASSEMBLY RPLS--.....		EA		1	*	*	*		*	101	4
					1560-334-6415											
					ATTACHING PARTS											
			5306-206-6370	NAS464-4-18 <80205>	.BOLT,SHEAR.....		EA		1	*	*	*		*	101	5
			5310-187-2354	AN960PD416 <88044>	.WASHER,FLAT.....		HD		2	*	*	*		*	101	
			5310-176-8108	AN320-4 <88044>	.NUT,SLOTTED,HEXAGON.....		HD		1	*	*	*		*	101	
			5315-234-1856	MS24665-155 <96906>	.PIN,COTTER.....		HD		1	*	*	*		*	101	
X2	F			NAS464-4-29 <80205>	.BOLT,SHEAR.....		EA		1						101	6
			5310-184-9001	AN960PD416L <88044>	.WASHER,FLAT.....		HD		2	*	*	*		*	101	
			5310-176-8108	AN320-4 <88044>	.NUT,SLOTTED,HEXAGON.....		HD		1	*	*	*		*	101	
			5315-234-1856	MS24665-155 <96906>	.PIN,COTTER.....		HD		1	*	*	*		*	101	
					---*---											
			1560-334-6413	S1640-64009-4 <78286>	.ROD ASSEMBLY RPL-BY.....										101	
					1560-632-2846											
P	F		1560-632-2846	S1640-64009-9 <78286>	.ROD ASSEMBLY RPLS--.....		EA		4	*	2	2		*	101	7
					1560-334-6413											
					ATTACHING PARTS											
			5306-206-6370	NAS464-4-18 <80205>	.BOLT,SHEAR.....		EA		1	*	*	*		*	101	8
			5310-187-2354	AN960PD416 <88044>	.WASHER,FLAT.....		HD		2	*	*	*		*	101	
			5310-176-8108	AN320-4 <88044>	.NUT,SLOTTED,HEXAGON.....		HD		1	*	*	*		*	101	
			5315-234-1856	MS24665-155 <96906>	.PIN,COTTER.....		HD		1	*	*	*		*	101	
			5306-292-5099	NAS464-4-32 <80205>	.BOLT,SHEAR.....		EA		1	*	*	*		*	101	9

(1) SOURCE, MAINT AND REC CODE (a) SOURCE CODE	(b) MAINT LEVEL	(c) REC CODE	(2) FEDERAL STOCK NUMBER	REFERENCE NUMBER		(3) DESCRIPTION	MODELS USABLE ON CH-34C	(4) UNIT OF ISSUE	(5) QTY INC IN UNIT PACK	(6) QTY INC IN UNIT	(7) 30-DAY DS GS MAINT ALW (a) 1-20	(b) 21-50	(c) 51-100	(8) 1-YR ALWPER 100 EQUIP CNTGCY	(9) DEPOT MAINT ALWPER 100 EQUIP	(10) ILLUSTRATION (a) FIG NO	(b) ITEM NO
			5310-141-1795	AN960-416	<88044>	.WASHER,FLAT.....		HD		1	*	*	*		*	101	
			5310-176-8108	AN320-4	<88044>	.NUT,SLOTTED,HEXAGON.....		HD		1	*	*	*		*	101	
			5315-234-1856	MS24665-155	<96906>	.PIN,COTTER.....		HD		1	*	*	*		*	101	
						---*---											
				S1640-61630	<78286>	.ADJUSTOR INSTALLATION SEE.. FIG.102 FOR BREAKDOWN				2						101	10
				S1640-61655	<78286>	.GUARD INSTALLATION.....				1						101	
				S1640-61656-1	<78286>	..GUARD,DIRECTIONAL CONTROL.. MAKEFR		EA		1						101	11
						AR 9330-576-3968 PLASTIC SH											
						ATTACHING PARTS											
			5306-182-2061	AN3H10A	<88044>	..BOLT,MACHINE.....		HD		2	*	*	*		*	101	12
			5310-183-4406	AN960PD10	<88044>	..WASHER,FLAT.....		HD		4	*	*	*		*	101	
			5310-167-0753	AN960PD10L	<88044>	..WASHER,FLAT.....		HD		4	*	*	*		*	101	
			5310-877-5797	MS21044N3	<96906>	..NUT,SELF-LOCKING,HEXAGON...		EA		2	*	*	*		*	101	
						---*---											
				NAS43DD3-16	<80205>	..SPACER,SLEEVE.....		EA		2						101	13
P	F		1560-566-2419	S1640-61657-1	<78286>	..GUARD,FLIGHT CONTROLS.....		EA		1	*	*	*		*	101	14
						ATTACHING PARTS											
			5306-182-2058	AN3H5A	<88044>	..BOLT,MACHINE.....		EA		2	*	*	*		*	101	15
			5310-183-4406	AN960PD10	<88044>	..WASHER,FLAT.....		HD		4	*	*	*		*	101	
			5310-877-5797	MS21044N3	<96906>	..NUT,SELF-LOCKING,HEXAGON...		EA		2	*	*	*		*	101	
						---*---											
MF	F			S1640-61655-1	<78286>	..CLIP..... MAKEFR		EA		1						101	16
						AR 9535-554-1415 AL ALLY SH											
			5306-182-1959	AN4H11A	<88044>	.BOLT,MACHINE.....		HD		2	*	*	*		*	101	18
			5310-187-2354	AN960PD416	<88044>	.WASHER,FLAT.....		HD		4	*	*	*		*	101	
			5310-877-5797	MS21044N3	<96906>	.NUT,SELF-LOCKING,HEXAGON....		EA		2	*	*	*		*	101	
			1680-773-6267	S1640-61730	<78286>	.QUADRANT INSTALLATION.....		EA		1	*	*	*			101	19
X2	F			S1640-61772-1	<78286>	..STOP.....		EA		1						101	20
						ATTACHING PARTS											
			5305-145-6971	AN503-8-6	<88044>	..SCREW,MACHINE.....		HD		2	*	*	*		*	101	21
			5310-184-8966	AN960PD8	<88044>	..WASHER,FLAT.....		HD		2	*	*	*		*	101	
						---*---											
X2	F			S1640-61772-2	<78286>	..STOP.....		EA		1						101	22
AF	F			S1640-61733-2	<78286>	..QUADRANT ASSEMBLY.....		EA		1						101	24
						ATTACHING PARTS											
			5306-174-4117	AN175H11	<88044>	..BOLT,MACHINE.....		HD		1	*	*	*		*	101	25
			5310-167-0820	AN960-516	<88044>	..WASHER,FLAT.....		HD		1	*	*	*		*	101	
			5310-184-8980	AN960PD516L	<88044>	..WASHER,FLAT.....		HD		AR	*	*	*		*	101	
			5306-174-4117	AN175H11	<88044>	..BOLT,MACHINE.....		HD		1	*	*	*		*	101	26
			5310-184-8980	AN960PD516L	<88044>	..WASHER,FLAT.....		HD		AR	*	*	*		*	101	
						---*---											
			5306-638-8173	NAS428-4-14	<80205>	...BOLT,MACHINE.....		EA		2	*	*	*		*	101	27
			5310-316-8956	AN316-4R	<88044>	...NUT,PLAIN,HEXAGON.....		HD		2	*	*	*		*	101	28
			5310-573-6417	KR9-1	<99057>	...RING,KEY.....		EA		1	*	*	*			101	29
P	F		1560-340-1138	S1640-61728	<78286>	...ARM ASSEMBLY.....		EA		1	*	*	*		*	101	31
						ATTACHING PARTS											
			5315-198-8112	AN386-2-13A	<88044>	...PIN,TAPERED,THREADED.....		EA		2	*	*	*		*	101	32

(1) SOURCE, MAINT AND REC CODE (a) SOURCE CODE	(b) MAINT LEVEL	(c) REC CODE	(2) FEDERAL STOCK NUMBER	REFERENCE NUMBER		(3) DESCRIPTION	MODELS USABLE ON CH-34C	(4) UNIT OF ISSUE	(5) QTY INC IN UNIT PACK	(6) QTY INC IN UNIT	(7) 30-DAY DS GS MAINT ALW (a) 1-20	(b) 21-50	(c) 51-100	(8) 1-YR ALW PER 100 EQUIP CNTGCY	(9) DEPOT MAINT ALW PER 100 EQUIP	(10) ILLUSTRATION (a) FIG NO	(b) ITEM NO
			5310-167-0685	AN975-3	<88044>	...WASHER,RECESSED.....		HD		2	*	*	*		*	101	
			5310-807-1467	MS21042-3	<96906>	...NUT,SELF-LOCKING,HEXAGON..				2	*	*	*		*	101	
						---*---											
P	F		3110-142-4314	AN200KS4	<88044>	....BEARING,BALL,AIRFRAME....		EA		1	*	*	*		REF	101	33
			3120-708-0081	NAS537-4P66	<80205>	...BUSHING.....		EA		2	*	*	*		*	101	34
			3120-708-0082	NAS538-4P49	<80205>	...BUSHING.....		EA		2	*	*	*		*	101	35
P	D		5310-768-3862	SS4400-1	<78286>	...WASHER.....		EA		2					*	101	36
P	F		1560-563-9957	S1640-61371	<78286>	...QUADRANT,FLIGHT CONTROL...		EA		1	*	*	*		*	101	37
						ATTACHING PARTS											
			5315-198-8112	AN386-2-13A	<88044>	...PIN,TAPERED,THREADED.....		EA		2	*	*	*		*	101	38
			5310-167-0685	AN975-3	<88044>	...WASHER,RECESSED.....		HD		2	*	*	*		*	101	
			5310-807-1467	MS21042-3	<96906>	...NUT,SELF-LOCKING,HEXAGON..				2	*	*	*		*	101	
						---*---											
P	F		1560-563-9960	S1640-61732	<78286>	...SHAFT,DIRECTIONAL CONTROL.		EA		1	*	*	*		*	101	39
				S1640-61604	<78286>	.DAMPER INSTALLATION.....				1						101	40
P	D	R	1615-589-8446	S1565-61970-1	<78286>	..DAMPENER,FLUTTER.....		EA		1	2	2	4	50	*	101	41
						SEE FIG.103 FOR BREAKDOWN											
						ATTACHING PARTS											
			5306-206-4911	AN174H15A	<88044>	..BOLT,MACHINE.....		EA		1	*	*	*		*	101	42
			5310-184-9001	AN960PD416L	<88044>	..WASHER,FLAT.....		HD		2	*	*	*		*	101	
			5310-877-5796	MS21044N4	<96906>	..NUT,SELF-LOCKING,HEXAGON...		EA		1	*	*	*		*	101	
P	F		5306-608-6768	S1565-61377	<78286>	..TRUNNION,PEDAL DAMPER.....		EA		2	*	*	*		*	101	43
MF	F			S1640-61773	<78286>	..SHIM.....		EA		2						101	44
						MAKEFR											
						AR 9535-243-1875 SHIM											
			5310-149-9146	MS20002C6	<96906>	..WASHER,RECESSED.....		HD		2	*	*	*		*	101	45
						---*---											
P	F		1560-613-1009	S1640-61727-3	<78286>	..TRUNNION ASSEMBLY.....		EA		1	*	*	*		*	101	46
						ATTACHING PARTS											
			5306-285-5326	AN174H11A	<88044>	..BOLT,MACHINE.....		EA		1	*	*	*		*	101	47
			5310-184-9001	AN960PD416L	<88044>	..WASHER,FLAT.....		HD		1	*	*	*		*	101	
			5310-877-5796	MS21044N4	<96906>	..NUT,SELF-LOCKING,HEXAGON...		EA		1	*	*	*		*	101	
			5306-550-3408	AN174H13A	<88044>	..BOLT,MACHINE.....		HD		1	*	*	*		*	101	48
			5310-187-2354	AN960PD416	<88044>	..WASHER,FLAT.....		HD		1	*	*	*		*	101	
			5310-877-5796	MS21044N4	<96906>	..NUT,SELF-LOCKING,HEXAGON...		EA		1	*	*	*		*	101	
						---*---											
P	F		1560-340-1139	S1640-61731	<78286>	..FITTING ASSEMBLY.....		EA		1	*	*	*		*	101	49
P	F		3110-142-4461	AN200KP4	<88044>	...BEARING,BALL,AIRFRAME.....		EA		1	*	*	*		REF	101	51
				S1640-62601-1	<78286>	.PEDAL AND SUPPORT.....				1						101	52
						INSTALLATION SEE FIG.104											
						FOR BREAKDOWN											
			5315-597-1520	NAS427K13	<80205>	.PIN,SPRING.....		EA		2	*	*	*		*	101	53
			3020-277-1123	AN220-2	<88044>	.PULLEY,GROOVE.....		EA		1	*	*	*		*	101	54
						ATTACHING PARTS											
			5306-174-4117	AN175H11	<88044>	.BOLT,MACHINE.....		HD		1	*	*	*		*	101	55
			5310-187-2399	AN960PD516	<88044>	.WASHER,FLAT.....		HD		2	*	*	*		*	101	
			5310-167-1286	AN310-5	<88044>	.NUT,CASTELLATED,HEXAGON.....		HD		1	*	*	*		*	101	
			5315-234-1856	MS24665-155	<96906>	.PIN,COTTER.....		HD		1	*	*	*		*	101	
						---*---											
			5315-597-1520	NAS427K13	<80205>	.PIN,SPRING.....		EA		2	*	*	*		*	101	56
				S1640-61662-3	<78286>	.BRACKET INSTALLATION,PULLEY.				1						101	
P	F		1560-675-3286	S1640-61663-3	<78286>	..BRACKET-LH.....		EA		1	*	*	*		*	101	57

(1) SOURCE, MAINT AND REC CODE (a) SOURCE CODE	(b) MAINT LEVEL	(c) REC LEVEL CODE	(2) FEDERAL STOCK NUMBER	(3) DESCRIPTION REFERENCE NUMBER			MODELS USABLE ON CH-34C	(4) UNIT OF ISSUE	(5) QTY INC IN UNIT PACK	(6) QTY INC IN UNIT	(7) 30-DAY DS GS MAINT ALW (a) 1-20	(b) 21-50	(c) 51-100	(8) 1-YR ALW PER 100 EQUIP CNTGCY	(9) DEPOT MAINT ALW PER 100 EQUIP	(10) ILLUSTRATION (a) FIG NO	(b) ITEM NO
P	F		1560-672-3533	S1640-61663-4	<78286>	..BRACKET-RH.....		EA		1	*	*	*		*	101	58
						ATTACHING PARTS											
			5306-182-2060	AN3H7A	<88044>	..BOLT,MACHINE.....		HD		2	*	*	*		*	101	59
			5310-183-4406	AN960PD10	<88044>	..WASHER,FLAT.....		HD		4	*	*	*		*	101	
			5310-877-5797	MS21044N3	<96906>	..NUT,SELF-LOCKING,HEXAGON...		EA		2	*	*	*		*	101	
						---*---											
P	F		1560-672-5451	S1640-61667-1	<78286>	..BLOCK,RADIUS.....		EA		2	*	*	*		*	101	60
MF	F			S1640-61654-4	<78286>	.GUARD USBL EFF 54-882 &....		EA		2						101	61
						SUBSEQUENT											
						MAKEFR											
						AR 9330-290-3461 PLASTIC SH											
						ATTACHING PARTS											
			5305-984-6193	MS35206-245	<96906>	.SCREW,MACHINE.....		HD		4	*	*	*		*	101	62
			5310-184-8966	AN960PD8	<88044>	.WASHER,FLAT.....		HD		8	*	*	*		*	101	
			5310-811-3494	MS21044N08	<96906>	.NUT,SELF-LOCKING,HEXAGON....		EA		4	*	*	*		*	101	
						---*---											
				S1640-61665	<78286>	.FAIRLEAD INSTALLATION.....				1						101	
MF	F			S1640-61666	<78286>	..FAIRLEAD.....		EA		2						101	63
						MAKEFR											
						AR 9535-167-2280 AL ALLY SH											
						ATTACHING PARTS											
			5305-984-6195	MS35206-247	<88044>	..SCREW,MACHINE.....				2	*	*	*		*	101	64
			5310-184-8966	AN960PD8	<88044>	..WASHER,FLAT.....		HD		4	*	*	*		*	101	
			5310-811-3494	MS21044N08	<96906>	..NUT,SELF-LOCKING,HEXAGON...		EA		2	*	*	*		*	101	
						---*---											
			5306-182-2063	AN3H12A	<88044>	.BOLT,MACHINE.....		HD		2	*	*	*		*	101	65
			5310-167-0753	AN960PD10L	<88044>	.WASHER,FLAT.....		HD		2	*	*	*		*	101	
			5340-619-7556	AN155B32S	<88044>	.TURNBUCKLE BODY.....		EA		1	*	*	*		*	101	66
P	F		4010-631-3837	NAS305-37-1756	<80205>	.WIRE ROPE ASSEMBLY,SINGLE...		EA		1	*	*	*		*	101	67
						LEG											
			5315-597-1520	NAS427K13	<80205>	.PIN,SPRING.....		EA		2	*	*	*		*	101	68
				S1640-61678-1	<78286>	.BRACKET INSTALLATION.....				1						101	
			5306-182-2060	AN3H7A	<88044>	..BOLT,MACHINE.....		HD		3	*	*	*		*	101	69
			5310-167-0765	AN970-3	<88044>	..WASHER,FLAT.....		HD		3	*	*	*		*	101	
			5310-167-0753	AN960PD10L	<88044>	..WASHER,FLAT.....		HD		AR	*	*	*		*	101	
			5310-183-4406	AN960PD10	<88044>	..WASHER,FLAT.....		HD		AR	*	*	*		*	101	
			5310-877-5797	MS21044N3	<96906>	..NUT,SELF-LOCKING,HEXAGON...		EA		3	*	*	*		*	101	
			5306-182-1958	AN4H10A	<88044>	..BOLT,MACHINE.....		HD		1	*	*	*		*	101	70
			5310-187-2354	AN960PD416	<88044>	..WASHER,FLAT.....		HD		AR	*	*	*		*	101	
			5310-184-9001	AN960PD416L	<88044>	..WASHER,FLAT.....		HD		AR	*	*	*		*	101	
			5310-877-5796	MS21044N4	<96906>	..NUT,SELF-LOCKING,HEXAGON...		EA		1	*	*	*		*	101	
			5306-151-1423	AN4-11A	<88044>	..BOLT,MACHINE.....		EA		1	*	*	*			101	71
			5310-187-2354	AN960PD416	<88044>	..WASHER,FLAT.....		HD		AR	*	*	*		*	101	
			5310-184-9001	AN960PD416L	<88044>	..WASHER,FLAT.....		HD		AR	*	*	*		*	101	
			5310-877-5796	MS21044N4	<96906>	..NUT,SELF-LOCKING,HEXAGON...		EA		1	*	*	*		*	101	
P	F		1560-675-1253	S1640-61683-1	<78286>	..SHIM.....		EA		AR	2	2	3		*	101	72
P	F		1560-570-0660	S1640-61628	<78286>	..SLEEVE,BRACKET,DIRECTIONAL.		EA		1	*	2	2		*	101	73
			5330-350-9013	AN6227B10	<88044>	..PACKING,PREFORMED.....		EA		1	*	*	*		*	101	74
P	H		5310-950-1310	MS27183-4	<96906>	..WASHER.....		HD		1	*	*	*		*	101	
			5315-597-1520	NAS427K13	<80205>	.PIN,SPRING.....		EA		1	*	*	*		*	101	75
MF	F			S1640-61725	<78286>	.GUARD,FLIGHT CONTROLS.....		EA		1						101	76
						MAKEFR											

(1) SOURCE, MAINT AND REC CODE (a) SOURCE CODE	(b) MAINT LEVEL	(c) REC CODE	(2) FEDERAL STOCK NUMBER	REFERENCE NUMBER		(3) DESCRIPTION	MODELS USABLE ON CH-34C	(4) UNIT OF ISSUE	(5) QTY INC IN UNIT PACK	(6) QTY INC IN UNIT	(7) 30-DAY DS GS MAINT ALW (a) 1-20	(b) 21-50	(c) 51-100	(8) 1-YR ALW PER 100 EQUIP CNTGCY	(9) DEPOT MAINT ALW PER 100 EQUIP	(10) ILLUSTRATION (a) FIG NO	(b) ITEM NO
						CONTINUED										101	76
						AR 9330-576-3984 PLASTIC SH											
						ATTACHING PARTS											
			5305-286-0213	AN525-832R10	<88044>	.SCREW,MACHINE.....		HD		2	*	*	*		*	101	77
			5310-184-8966	AN960PD8	<88044>	.WASHER,FLAT.....		HD		2	*	*	*		*	101	
			5310-811-3494	MS21044N08	<96906>	.NUT,SELF-LOCKING,HEXAGON....		EA		2	*	*	*		*	101	
						---*---											
P	F		1560-534-2156	S1640-61694-1	<78286>	.FAIRLEAD,DIRECTIONAL.....		EA		2	*	2	2		*	101	78
						CONTROL CABLE											
						ATTACHING PARTS											
			5305-281-8874	AN525-832R18	<88044>	.SCREW,MACHINE.....		EA		2	*	*	*		*	101	79
			5310-184-8966	AN960PD8	<88044>	.WASHER,FLAT.....		HD		4	*	*	*		*	101	
			5310-811-3494	MS21044N08	<96906>	.NUT,SELF-LOCKING,HEXAGON....		EA		2	*	*	*		*	101	
						---*---											
MF	F			S1640-61694-2	<78286>	.FAIRLEAD.....		EA		2						101	80
						MAKEFR											
						AR 9330-202-3806 AL ALLY SH											
						ATTACHING PARTS											
			5305-273-5342	AN525-832R12	<88044>	.SCREW,MACHINE.....		EA		2	*	*	*		*	101	81
			5310-184-8966	AN960PD8	<88044>	.WASHER,FLAT.....		HD		4	*	*	*		*	101	
			5310-811-3494	MS21044N08	<96906>	.NUT,SELF-LOCKING,HEXAGON....		EA		2	*	*	*		*	101	
						---*---											
MF	F			S1640-61694-2	<78286>	.FAIRLEAD.....		EA		6						101	82
						MAKEFR											
						AR 9330-202-3806 AL ALLY SH											
						ATTACHING PARTS											
			5305-273-5342	AN525-832R12	<88044>	.SCREW,MACHINE.....		EA		2	*	*	*		*	101	83
			5310-184-8966	AN960PD8	<88044>	.WASHER,FLAT.....		HD		4	*	*	*		*	101	
			5310-811-3494	MS21044N08	<96906>	.NUT,SELF-LOCKING,HEXAGON....		EA		2	*	*	*		*	101	
						---*---											
P	F		1560-570-0661	S1640-61684	<78286>	.CHANNEL,DIRECTIONAL.....		EA		3	*	*	*		*	101	84
						CONTROL CABLES											
						ATTACHING PARTS											
			5305-281-8527	AN525-832R8	<88044>	.SCREW,MACHINE.....		HD		3	*	*	*		*	101	85
			5310-184-8966	AN960PD8	<88044>	.WASHER,FLAT.....		HD		6	*	*	*		*	101	
			5310-811-3494	MS21044N08	<96906>	.NUT,SELF-LOCKING,HEXAGON....		EA		3	*	*	*		*	101	
						---*---											
MF	F			S1640-61694-2	<78286>	.FAIRLEAD.....		EA		2						101	86
						MAKEFR											
						AR 9330-202-3806 AL ALLY SH											
						ATTACHING PARTS											
			5305-273-5342	AN525-832R12	<88044>	.SCREW,MACHINE.....		EA		2	*	*	*		*	101	87
			5310-184-8966	AN960PD8	<88044>	.WASHER,FLAT.....		HD		4	*	*	*		*	101	
			5310-811-3494	MS21044N08	<96906>	.NUT,SELF-LOCKING,HEXAGON....		EA		2	*	*	*		*	101	
						---*---											
P	F		1560-534-2156	S1640-61694-1	<78286>	.FAIRLEAD,DIRECTIONAL.....		EA		2	*	REF	REF		REF	101	88
						CONTROL CABLE											
						ATTACHING PARTS											
			5305-273-5348	AN525-832R20	<88044>	.SCREW,MACHINE.....		GR		2	*	*	*		*	101	89
			5310-184-8966	AN960PD8	<88044>	.WASHER,FLAT.....		HD		4	*	*	*		*	101	
			5310-811-3494	MS21044N08	<96906>	.NUT,SELF-LOCKING,HEXAGON....		EA		2	*	*	*		*	101	
						---*---											

(1) SOURCE, MAINT AND REC CODE (a) SOURCE CODE	(b) MAINT CODE	(c) REC CODE	(2) FEDERAL STOCK NUMBER	REFERENCE NUMBER		(3) DESCRIPTION	MODELS USABLE ON CH-34C	(4) UNIT OF ISSUE	(5) QTY INC IN UNIT PACK	(6) QTY INC IN UNIT	(7) 30-DAY DS/GS MAINT ALW (a) 1-20	(b) 21-50	(c) 51-100	(8) 1-YR ALW PER 100 EQUIP CNTGCY	(9) DEPOT MAINT ALW PER 100 EQUIP	(10) ILLUSTRATION (a) FIG NO	(b) ITEM NO
			4010-565-8491	S1640-61620-1	<78286>	.CABLE ASSEMBLY,FLIGHT..... CONTROL RPL-BY 4010-631-3838										101	
P	F		4010-631-3838	NAS305-66-1533	<80205>	.WIRE ROPE ASSEMBLY RPLS--.. 4010-565-8491		EA		1	*	*	*		*	101	90
			5315-597-1520	NAS427K13	<80205>	.PIN,SPRING.....		EA		2	*	*	*		*	101	91
			3020-277-1123	AN220-2	<88044>	.PULLEY,GROOVE..... ATTACHING PARTS		EA		1	*	*	*		*	101	92
			5306-174-4117	AN175H11	<88044>	.BOLT,MACHINE.....		HD		1	*	*	*		*	101	93
			5310-187-2399	AN960PD516	<88044>	.WASHER,FLAT.....		HD		2	*	*	*		*	101	
			5310-167-1286	AN310-5	<88044>	.NUT,CASTELLATED,HEXAGON.....		HD		1	*	*	*		*	101	
			5315-234-1856	MS24665-155	<96906>	.PIN,COTTER..... ---*---		HD		1	*	*	*		*	101	
			5315-597-1520	NAS427K13	<80205>	.PIN,SPRING.....		EA		2	*	*	*		*	101	94
				S1640-61662-4	<78286>	.BRACKET INSTALLATION,PULLEY.				1						101	
P	F		1560-672-4812	S1640-61664-3	<78286>	..BRACKET-LH.....		EA		1	*	*	*		*	101	95
P	F		1560-672-4811	S1640-61664-4	<78286>	..BRACKET-RH..... ATTACHING PARTS		EA		1	*	*	*		*	101	96
			5306-182-2060	AN3H7A	<88044>	..BOLT,MACHINE.....		HD		2	*	*	*		*	101	97
			5310-183-4406	AN960PD10	<88044>	..WASHER,FLAT.....		HD		4	*	*	*		*	101	
			5310-877-5797	MS21044N3	<96906>	..NUT,SELF-LOCKING,HEXAGON... ---*---		EA		2	*	*	*		*	101	
P	F		1560-672-5451	S1640-61667-1	<78286>	..BLOCK,RADIUS.....		EA		2	*	*	*		REF	101	98
MF	F			S1640-61654-3	<78286>	.GUARD,DIRECTIONAL CONTROL... MAKEFR AR 9330-290-3461 PLASTIC SH ATTACHING PARTS		EA		2						101	99
			5305-984-6198	MS35206-246	<96906>	.SCREW,MACHINE.....		HD		2	*	*	*		*	101	100
			5310-184-8966	AN960PD8	<88044>	.WASHER,FLAT.....		HD		4	*	*	*		*	101	
			5310-811-3494	MS21044N08	<96906>	.NUT,SELF-LOCKING,HEXAGON.... ---*---		EA		2	*	*	*		*	101	
MF	F			S1640-61654-1	<78286>	.GUARD,DIRECTIONAL CONTROL... MAKEFR AR 9330-290-3461 PLASTIC SH ATTACHING PARTS		EA		2						101	101
			5305-984-6193	MS35206-245	<96906>	.SCREW,MACHINE.....		HD		4	*	*	*		*	101	102
			5310-184-8966	AN960PD8	<88044>	.WASHER,FLAT.....		HD		8	*	*	*		*	101	
			5310-811-3494	MS21044N08	<96906>	.NUT,SELF-LOCKING,HEXAGON.... ---*---		EA		4	*	*	*		*	101	
			5306-182-2063	AN3H12A	<88044>	.BOLT,MACHINE.....		HD		2	*	*	*		*	101	103
			5310-167-0753	AN960PD10L	<88044>	.WASHER,FLAT.....		HD		2	*	*	*		*	101	
			5340-619-7556	AN155B32S	<88044>	.TURNBUCKLE BODY.....		EA		1	*	*	*		*	101	104
P	F		4010-631-3836	NAS305-37-1716	<80205>	.WIRE ROPE ASSEMBLY,..... SINGLE LEG		EA		1	*	*	*		*	101	105
			5315-597-1520	NAS427K13	<80205>	.PIN,SPRING.....		EA		2	*	*	*		*	101	106
X2	F		1560-672-7387	S1640-61721-1	<78286>	.BRACKET ASSEMBLY.....		EA		1	*	*	*		*	101	
				S1640-61673	<78286>	.BRACKET INSTALLATION.....				1						101	
P	F		1560-570-0660	S1640-61628	<78286>	..SLEEVE,BRACKET,DIRECTIONAL.		EA		1	*	REF	REF		REF	101	107
			5330-350-9013	MS29513-112	<88044>	..PACKING,PREFORMED.....		EA		1	*	*	*		*	101	108
			5340-530-5357	AN665-34R	<88044>	.CLEVIS,ROD END..... ATTACHING PARTS		EA		1	*	*	*		*	101	110
			5306-285-5325	AN174H7A	<88044>	.BOLT,MACHINE.....		HD		1	*	*	*		*	101	111

(1) SOURCE, MAINT AND REC CODE (a) SOURCE CODE	(b) MAINT LEVEL	(c) REC CODE	(2) FEDERAL STOCK NUMBER	REFERENCE NUMBER		(3) DESCRIPTION	MODELS USABLE ON CH-34C	(4) UNIT OF ISSUE	(5) QTY INC IN UNIT PACK	(6) QTY INC IN UNIT	(7) 30-DAY DS GS MAINT ALW (a) 1-20	(b) 21-50	(c) 51-100	(8) 1-YR ALW PER 100 EQUIP CNTGCY	(9) DEPOT MAINT ALW PER 100 EQUIP	(10) ILLUSTRATION (a) FIG NO	(b) ITEM NO
			5310-141-1795	AN960-416	<88044>	.WASHER,FLAT.....		HD		1	*	*	*		*	101	
			5310-877-5796	MS21044N4	<96906>	.NUT,SELF-LOCKING,HEXAGON....		EA		1	*	*	*		*	101	
			5315-234-1856	MS24665-155	<96906>	.PIN,COTTER.....		HD		1	*	*	*		*	101	
						---*---											
			5310-316-8956	AN316-4R	<88044>	.NUT,PLAIN,HEXAGON.....		HD		2	*	*	*		*	101	112
				S1640-61723-1	<78286>	.BRACKET.....		EA		1						101	
P	F		1560-334-6393	S1640-61621	<78286>	.CABLE ASSEMBLY,DIRECTIONAL.. CONTROL		EA		1	*	2	2		*	101	113
XI				AN669S5RH	<88044>	..TERMINAL,WIRE ROPE STUD....		EA		1						101	
			5315-597-2415	NAS427K15	<80205>	.PIN,SPRING.....		EA		1	*	*	*			101	115
			5315-282-0296	NAS427K14	<80205>	.PIN,SPRING.....		EA		1	*	*	*		*	101	116
			5315-597-1520	NAS427K13	<80205>	.PIN,SPRING.....		EA		1	*	*	*		*	101	117
P	F		1560-534-2156	S1640-61694-1	<78286>	.FAIRLEAD,DIRECTIONAL..... CONTROL CABLE ATTACHING PARTS		EA		2	*	REF	REF		REF	101	118
			5305-281-8874	AN525-832R18	<88044>	.SCREW,MACHINE.....		EA		2	*	*	*		*	101	119
			5310-184-8966	AN960PD8	<88044>	.WASHER,FLAT.....		HD		4	*	*	*		*	101	
			5310-811-3494	MS21044N08	<96906>	.NUT,SELF-LOCKING,HEXAGON....		EA		2	*	*	*		*	101	
						---*---											
MF	F			S1640-61694-2	<78286>	.FAIRLEAD..... MAKEFR AR 9330-202-3806 AL ALLY SH ATTACHING PARTS		EA		2						101	120
			5305-273-5342	AN525-832R12	<88044>	.SCREW,MACHINE.....		EA		2	*	*	*		*	101	121
			5310-184-8966	AN960PD8	<88044>	.WASHER,FLAT.....		HD		4	*	*	*		*	101	
			5310-811-3494	MS21044N08	<96906>	.NUT,SELF-LOCKING,HEXAGON....		EA		2	*	*	*		*	101	
						---*---											
MF	F			S1640-61694-2	<78286>	.FAIRLEAD..... MAKEFR AR 9330-202-3806 ATTACHING PARTS		EA		6						101	122
			5305-273-5342	AN525-832R12	<88044>	.SCREW,MACHINE.....		EA		2	*	*	*		*	101	123
			5310-184-8966	AN960PD8	<88044>	.WASHER,FLAT.....		HD		4	*	*	*		*	101	
			5310-811-3494	MS21044N08	<96906>	.NUT,SELF-LOCKING,HEXAGON....		EA		2	*	*	*		*	101	
						---*---											
P	F		1560-570-0661	S1640-61684	<78286>	.CHANNEL,DIRECTIONAL..... CONTROL CABLES ATTACHING PARTS		EA		3	*	*	*		REF	101	124
			5305-281-8527	AN525-832R8	<88044>	.SCREW,MACHINE.....		HD		3	*	*	*		*	101	125
			5310-184-8966	AN960PD8	<88044>	.WASHER,FLAT.....		HD		6	*	*	*		*	101	
			5310-811-3494	MS21044N08	<96906>	.NUT,SELF-LOCKING,HEXAGON....		EA		3	*	*	*		*	101	
						---*---											
MF	F			S1640-61694-2	<78286>	.FAIRLEAD..... MAKEFR AR 9330-202-3806 AL ALLY SH ATTACHING PARTS		EA		2						101	126
			5305-273-5342	AN525-832R12	<88044>	.SCREW,MACHINE.....		EA		2	*	*	*		*	101	127
			5310-184-8966	AN960PD8	<88044>	.WASHER,FLAT.....		HD		4	*	*	*		*	101	
			5310-811-3494	MS21044N08	<96906>	.NUT,SELF-LOCKING,HEXAGON....		EA		2	*	*	*		*	101	
						---*---											
P	F		1560-534-2156	S1640-61694-1	<78286>	.FAIRLEAD,DIRECTIONAL..... CONTROL CABLE		EA		2	*	REF	REF		REF	101	128

(1) SOURCE, MAINT AND REC CODE (a) SOURCE CODE	(b) MAINT LEVEL	(c) REC CODE	(2) FEDERAL STOCK NUMBER	REFERENCE NUMBER	(3) DESCRIPTION	MODELS USABLE ON CH-34C	(4) UNIT OF ISSUE	(5) QTY INC IN UNIT PACK	(6) QTY INC IN UNIT	(7) 30-DAY DS GS MAINT ALW (a) 1-20	(b) 21-50	(c) 51-100	(8) 1-YR ALW PER 100 EQUIP CNTGCY	(9) DEPOT MAINT ALW PER 100 EQUIP	(10) ILLUSTRATION (a) FIG NO	(b) ITEM NO
					CONTINUED										101	128
					ATTACHING PARTS											
			5305-273-5348	AN525-832R20 <88044>	.SCREW,MACHINE.....		GR		2	*	*	*		*	101	129
			5310-184-8966	AN960PD8 <88044>	.WASHER,FLAT.....		HD		4	*	*	*		*	101	
			5310-811-3494	MS21044N08 <96906>	.NUT,SELF-LOCKING,HEXAGON....		EA		2	*	*	*		*	101	
					---*---											
			1560-565-8492	S1640-61620-2 <78286>	.CABLE ASSEMBLY,FLIGHT.....										101	
					CONTROL RPL-BY											
					4010-631-3835											
P	F		4010-631-3835	NAS305-36-1301 <80205>	.WIRE ROPE ASSEMBLY,SINGLE...		EA		1	*	*	*		*	101	130
					LEG RPLS-- 1560-565-8492											
P	F		1560-679-2381	S1640-61661-1 <78286>	.GUIDE,FLIGHT CONTROLS.....		EA		1	*	*	2		*	101	131
P	F		1560-679-2382	S1640-61661-2 <78286>	.GUIDE,FLIGHT CONTROLS.....		EA		1	*	*	*		*	101	
				S1665-61613-4 <78286>	.TAIL ROTOR SERVO UNIT.....				1						101	132
					INSTALLATION SEE FIG.105											
					FOR BREAKDOWN											
				S1640-61630 <78286>	ADJUSTOR INSTALLATION SEE...		EA								102	
					FIG.101 FOR NHA											
P	F		1560-345-2957	S1540-61699 <78286>	.HANDLE ASSEMBLY.....		EA		1	*	*	2		*	102	1
					ATTACHING PARTS											
			5340-803-7301	NAS51-50 <80205>	.RING,RETAINING.....		EA		1	*	*	*		*	102	2
					---*---											
AF	F			S1640-61631-1 <78286>	.ADJUSTOR ASSEMBLY.....		EA		1						102	3
					ATTACHING PARTS											
			5306-639-1451	NAS464-5-69 <80205>	.BOLT,SHEAR.....		EA		1	*	*	*		*	102	4
			5310-184-8980	AN960PD516L <88044>	.WASHER,FLAT.....		HD		2	*	*	*		*	102	
			5310-176-8109	AN320-5 <88044>	.NUT,SLOTTED,HEXAGON.....		HD		1	*	*	*		*	102	
			5315-234-1856	MS24665-155 <96906>	.PIN,COTTER.....		HD		1	*	*	*		*	102	
P	F		1560-551-7060	S1640-61658 <78286>	.SHIM.....		EA		AR	*	*	*		*	102	5
					---*---											
P	F		1560-334-6396	S1640-61634 <78286>	..ROD ASSEMBLY,PEDAL ADJUSTOR		EA		1	*	2	2		*	102	6
					ATTACHING PARTS											
			5305-989-7435	MS35207-264 <96906>	..SCREW,MACHINE.....		HD		4	*	*	*		*	102	7
			5310-183-4406	AN960PD10 <88044>	..WASHER,FLAT.....		HD		4	*	*	*		*	102	
					---*---											
X2	F			S1540-61689 <78286>	...ADAPTER.....		EA		1						102	8
P	F		1560-570-0577	S1540-61684 <78286>	...SHAFT,PEDAL ADJUSTER.....		EA		1	*	*	*		*	102	10
			5320-951-3216	MS20613-6P12 <96906>	...RIVET,SOLID.....		EA		3	*	*	*		*	102	12
					---*---											
X2	F			S1540-61688 <78286>	...COLLAR.....		EA		1						102	13
P	F		1560-098-8293	S1640-61640 <78286>	...FITTING ASSEMBLY,ROD.....		EA		1	*	*	*		*	102	14
					ADJUSTOR											
P	F		1560-334-6397	S1640-61637 <78286>	..LINK ASSEMBLY,PEDAL.....		EA		2	*	*	*		*	102	15
					ADJUSTOR											
					ATTACHING PARTS											
			5306-639-2302	NAS464-4-15 <80205>	..BOLT,SHEAR.....		EA		1	*	*	*		*	102	16

(1) SOURCE, MAINT AND REC CODE (a) SOURCE CODE	(b) MAINT LEVEL	(c) REC CODE	(2) FEDERAL STOCK NUMBER	REFERENCE NUMBER	(3) DESCRIPTION	MODELS USABLE ON CH-34C	(4) UNIT OF ISSUE	(5) QTY INC IN UNIT PACK	(6) QTY INC IN UNIT	(7) 30-DAY DS GS MAINT ALW (a) 1-20	(b) 21-50	(c) 51-100	(8) 1-YR ALW PER 100 EQUIP CNTGCY	(9) DEPOT MAINT ALW PER 100 EQUIP	(10) ILLUSTRATION (a) FIG NO	(b) ITEM NO
			5310-187-2354	AN960PD416	<88044> ..WASHER,FLAT.....		HD		2	*	*	*		*	102	
			5310-176-8108	AN320-4	<88044> ..NUT,SLOTTED,HEXAGON.....		HD		1	*	*	*		*	102	
			5315-234-1856	MS24665-155	<96906> ..PIN,COTTER.....		HD		1	*	*	*		*	102	
			5306-207-1058	NAS464-4-17	<80205> ..BOLT,SHEAR.....		EA		1	*	*	*		*	102	17
			5310-187-2354	AN960PD416	<88044> ..WASHER,FLAT.....		HD		2	*	*	*		*	102	
			5310-176-8108	AN320-4	<88044> ..NUT,SLOTTED,HEXAGON.....		HD		1	*	*	*		*	102	
			5315-234-1856	MS24665-155	<96906> ..PIN,COTTER.....		HD		1	*	*	*		*	102	
					---*---											
P	F		1560-308-0152	S1540-61682	<78286> ..YOKE,PEDAL ADJUSTOR.....		EA		1	*	2	2		*	102	18
			1560-334-6395	S1640-61633	<78286> ..ARM ASSEMBLY,LINE-REAMED...										102	
					RPL-BY 1560-606-7522											
P	F		1560-606-7522	S1640-61633-1	<78286> ..ARM ASSEMBLY,PEDAL.....		EA		2	*	*	*		*	102	19
					RPLS-- 1560-334-6395											
					ATTACHING PARTS											
			5306-207-0980	NAS464-5-25	<80205> ..BOLT,SHEAR.....		EA		1	*	*	*		*	102	20
			5310-187-2399	AN960PD516	<88044> ..WASHER,FLAT.....		HD		2	*	*	*		*	102	
			5310-176-8109	AN320-5	<88044> ..NUT,SLOTTED,HEXAGON.....		HD		1	*	*	*		*	102	
			5315-234-1856	MS24665-155	<96906> ..PIN,COTTER.....		HD		1	*	*	*		*	102	
					---*---											
P	F		1560-554-5485	S1540-61691	<78286> ...BEARING,SLEEVE.....		EA		2	*	*	*		*	102	21
			1560-334-6394	S1640-61632	<78286> ..BELLCRANK ASSEMBLY.....										102	
					RPL-BY 1560-601-0299											
P	F		1560-601-0299	S1640-61632-1	<78286> ..BELLCRANK ASSEMBLY.....		EA		1	*	*	*		*	102	22
					RPLS-- 1560-334-6394											
			3120-580-9991	NAS538-4P17	<80205> ...BUSHING,SLEEVE.....		EA		1	*	*	*		*	102	23
P	F		5310-768-3862	SS4400-1	<78286> ...WASHER.....		EA		1	*	*	*		REF	102	24
			3120-725-2962	NAS537-4P26	<80205> ...BUSHING,SLEEVE.....		EA		1	*	*	*		*	102	25
P	F		1560-662-6230	S1540-61694	<78286> ...BEARING,SLEEVE.....		EA		1	*	*	*		*	102	26
P	F		3110-142-4466	AN200KP5	<88044> ...BEARING,BALL,AIRFRAME.....		EA		2	*	*	*		*	102	27
P	F		1560-446-2988	SS4059-11-250	<78286> ...SPACER,SLEEVE.....		EA		1	*	*	*		*	102	28
P	F		1560-662-6627	S1540-61696	<78286> ...BEARING,SLEEVE.....		EA		8	*	*	*		*	102	29
MF	F			S1640-61660	<78286> .GUARD.....		EA		1						102	30
					MAKEFR											
					AR 9535-167-2280 AL ALLY SH											
					ATTACHING PARTS											
			5305-984-6198	MS35206-246	<96906> .SCREW,MACHINE.....		HD		2	*	*	*		*	102	31
			5310-184-8966	AN960PD8	<88044> .WASHER,FLAT.....		HD		4	*	*	*		*	102	
			5310-807-1466	MS21042-08	<96906> .NUT,SELF-LOCKING,HEXAGON....				2	*	*	*		*	102	
					---*---											
			1560-098-8296	S1640-61648	<78286> .FITTING ASSEMBLY RPL-BY....										102	
					1560-591-6748											
P	F		1560-591-6748	S1640-61648-1	<78286> .FITTING ASSEMBLY RPLS--....		EA		1	*	*	*		*	102	32
					1560-098-8296											
					ATTACHING PARTS											
			5306-182-2059	AN3H6A	<88044> .BOLT,MACHINE.....		HD		12	*	*	*		*	102	33
			5310-183-4406	AN960PD10	<88044> .WASHER,FLAT.....		HD		24	*	*	*		*	102	
			5310-877-5797	MS21044N3	<96906> .NUT,SELF-LOCKING,HEXAGON....		EA		12	*	*	*		*	102	
			5306-182-2017	AN4H6A	<88044> .BOLT,MACHINE.....		HD		4	*	*	*		*	102	34
			5310-187-2354	AN960PD416	<88044> .WASHER,FLAT.....		HD		8	*	*	*		*	102	
			5310-877-5796	MS21044N4	<96906> .NUT,SELF-LOCKING,HEXAGON....		EA		4	*	*	*		*	102	
					---*---											

(1) SOURCE, MAINT AND REC CODE (a) SOURCE CODE	(b) MAINT LEVEL	(c) REC CODE	(2) FEDERAL STOCK NUMBER	REFERENCE NUMBER		(3) DESCRIPTION	MODELS USABLE ON CH-34C	(4) UNIT OF ISSUE	(5) QTY INC IN UNIT PACK	(6) QTY INC IN UNIT	(7) 30-DAY DS/GS MAINT ALW (a) 1-20	(b) 21-50	(c) 51-100	(8) 1-YR ALW PER 100 EQUIP CNTGCY	(9) DEPOT MAINT ALW PER 100 EQUIP	(10) ILLUSTRATION (a) FIG NO	(b) ITEM NO
P	O	R	1615-589-8446	S1565-61970-1	<78286>	DAMPENER,FLUTTER SEE..... FIG.101 FOR NHA		EA			REF	REF	REF	REF		103	
			5330-804-5695	MS28778-6	<96906>	.PACKING,PREFORMED.....		EA		1	REF	REF	REF		*	103	1
			5310-638-2605	MS24400D6	<96906>	.NUT,PLAIN,HEXAGON.....		EA		1	*	*	*		10	103	2
P	F		1650-507-1447	52615	<81321>	.FILTER ELEMENT,FLUID,..... PRESSURE		EA		1	*	*	*		*	103	3
P	F		4730-595-3920	S1565-61388	<78286>	.ELBOW,BOSS.....		EA		1	*	*	*		*	103	4
			1560-974-9852	S1665-61597	<78286>	.YOKE ASSEMBLY,DAMPER,..... DIRECTIONAL CONTROL RPL-BY 5340-332-4926										103	
P	D		5340-323-4926	S1665-61604	<78286>	.CLEVIS,ROD END RPLS--..... 1560-974-9852 ATTACHING PARTS		EA		1					*	103	5
			5310-187-2399	AN960PD516	<88044>	.WASHER,FLAT.....		HD		1					*	103	6
			5310-176-8109	AN320-5	<88044>	.NUT,SLOTTED,HEXAGON.....		HD		1					*	103	
			5315-234-1856	MS24665-155	<96906>	.PIN,COTTER.....		HD		1					*	103	
						---*---											
			5330-579-3156	MS28775-116	<96906>	.PACKING,PREFORMED.....		EA		1	*	*	*		*	103	7
			5330-171-5897	MS28782-15	<96906>	.RETAINER,PACKING.....		AV		1	*	*	*		*	103	8
			5330-227-9483	AN6227B9	<88044>	.PACKING,PREFORMED.....		EA		1	*	*	*		*	103	9
			5330-641-1571	MS28782-9	<96906>	.RETAINER,PACKING.....		EA		1	*	*	*		*	103	10
			1650-343-4337	S1565-61374	<78286>	.CAP,FLUTTER DAMPNER..... RPL-BY 1650-588-3511										103	
P	D		1615-588-3511	S1565-61518	<78286>	.CAP,FLUTTER DAMPNER..... RPLS-- 1650-343-4337		EA		1					*	103	12
			5330-067-3358	AN6227B12	<88044>	.PACKING,PREFORMED.....		EA		1	*	*	*		*	103	13
			5330-171-5048	MS28782-12	<96906>	.RETAINER,PACKING.....		EA		1	*	*	*		*	103	14
			5330-171-5048	MS28782-12	<96906>	.RETAINER,PACKING.....		EA		1	*	*	*		*	103	15
P	D		1560-568-3823	S1565-61495	<78286>	.PLUG ASSEMBLY,RELIEF.....		EA		1	*	*	*		*	103	16
			1615-343-4332	S1565-61366	<78286>	.SPRING,HELICAL,COMPRESSION.. NOTE 1				1						103	17
			5330-559-1291	AN6227B2	<88044>	.PACKING,PREFORMED.....		EA		1	*	*	*		*	103	18
			5330-171-6748	MS28782-2	<96906>	.RETAINER,PACKING.....		EA		1	*	*	*		*	103	19
			5330-171-6748	MS28782-2	<96906>	.RETAINER,PACKING.....		EA		1	*	*	*		*	103	20
P	H		1615-343-9182	S1565-61497	<78286>	.PISTON,FLUTTER DAMPENER.....		EA		1	*	*	*		*	103	21
			5330-641-1571	MS28782-9	<96906>	.RETAINER,PACKING.....		EA		1	*	*	*		*	103	23
			5330-227-9483	AN6227B9	<88044>	.PACKING,PREFORMED.....		EA		1	*	*	*		*	103	24
			5330-808-0794	MS28778-8	<96906>	.PACKING,PREFORMED.....		EA		1	REF	REF	REF		*	103	25
			4730-080-1846	MS24391D8L	<96906>	.PLUG,MACHINE,THREAD.....		EA		1	*	*	*		*	103	26
P	H		4730-343-4335	S1565-61371	<78286>	.RESTRICTOR,FLUID FLOW.....		EA		1	*	*	*		*	103	27
			5330-584-0265	MS28775-012	<96906>	.PACKING,PREFORMED.....		EA		2	REF	REF	REF		*	103	28
P	H		1560-307-3566	S1510-26055	<78286>	.VALVE ASSEMBLY,DAMPER.....		EA		1	*	REF	REF		REF	103	29
X1				S1510-26055-1	<78286>	..PIN.....		EA		2						103	
			5315-582-2466	NAS561P4-11	<80205>	..PIN,SPRING.....		EA		1	*	*	*		REF	103	
P	D		3110-100-6147	MS150453	<96906>	..BALL,BEARING.....		HD		1	*	*	*		REF	103	
			5330-808-0794	MS28778-8	<96906>	.PACKING,PREFORMED.....		EA		1	REF	REF	REF		*	103	30
P	H		1615-591-6562	S1565-61527	<78286>	.PLUG,MACHINE THREAD.....		EA		1	*	*	*		*	103	31
P	H		1560-589-6063	S1565-61484	<78286>	.PLUG,MACHINE THREAD.....		EA		1	*	*	*		*	103	
P	H		1560-717-5841	S1565-61544	<78286>	.STOP.....		EA		1	*	*	*		*	103	32
			1650-663-3440	S1565-61486	<78286>	.SPRING,HELICAL,COMPRESSION.. NOTE 1		EA		1	*	*	*			103	33
			5330-582-1538	MS28774-110	<96906>	.RETAINER,PACKING.....		AV		1	*	*	*		*	103	35

(1) SOURCE, MAINT AND REC CODE (a) SOURCE CODE	(b) MAINT LEVEL	(c) REC CODE	(2) FEDERAL STOCK NUMBER	REFERENCE NUMBER		(3) DESCRIPTION	MODELS USABLE ON CH-34C	(4) UNIT OF ISSUE	(5) QTY INC IN UNIT PACK	(6) QTY INC IN UNIT	(7) 30-DAY DS GS MAINT ALW (a) 1-20	(b) 21 50	(c) 51-100	(8) 1-YR ALW PER 100 EQUIP CNTGCY	(9) DEPOT MAINT ALW PER 100 EQUIP	(10) ILLUSTRATION (a) FIG NO	(b) ITEM NO
			5330-050-1211	AN6227B8	<88044>	.PACKING,PREFORMED.....		EA		1	*	*	*		*	103	36
P	H		1615-340-2123	S1565-61485	<78286>	.PISTON,PEDAL DAMPER..... RPLS-- 1560-342-8921		EA		1	*	*	*		*	103	37
			5330-808-0794	MS28778-8	<96906>	.PACKING,PREFORMED.....		EA		1	REF	REF	REF		*	103	38
P	D		1615-591-6561	S1565-61528	<78286>	.PLUG AND STOP ASSEMBLY,END..		EA		1					*	103	39
X1				S1565-61528-1	<78286>	..PLUG.....		EA		1						103	
			5330-582-1538	MS28774-110	<96906>	.RETAINER,PACKING.....		AV		1	*	*	*		*	103	42
			5330-050-1211	AN6227B8	<88044>	.PACKING,PREFORMED.....		EA		1	*	*	*		*	103	43
P	H		1615-340-2123	S1565-61485	<78286>	.PISTON,PEDAL DAMPER..... RPLS-- 1560-342-8921		EA		1	*	*	*		REF	103	44
			1650-663-3440	S1565-61486	<78286>	.SPRING,HELICAL,COMPRESSION.. NOTE 1		EA		1	*	*	*			103	45
P	H		1560-717-5841	S1565-61544	<78286>	.STOP.....		EA		1	*	*	*		REF	103	46
P	F		1615-591-6567	S1565-61526-1	<78286>	.PLATE,FLUTTER DAMPER.....		EA		1	*	*	*		*	103	
			5330-584-0265	MS28775-012	<96906>	.PACKING,PREFORMED.....		EA		1	REF	REF	REF		*	103	48
			5330-171-5042	MS28782-7	<96906>	.RETAINER,PACKING.....		EA		2	*	*	*		*	103	49
			1615-591-6566	S1565-61523	<78286>	.PLUG,HYDRAULIC.....NOTE 1		EA		1	*	*	*			103	50
			5330-584-0266	MS28775-010	<96906>	.PACKING,PREFORMED.....		EA		1	*	*	*		*	103	51
			5330-171-5044	MS28782-5	<96906>	.RETAINER,PACKING.....		AV		2	*	*	*		*	103	52
			4730-591-6564	S1565-61520-1	<78286>	.FILTER AND ORIFICE..... ASSEMBLY NOTE 1		EA		1	*	*	*			103	53
			4730-277-6352	AN932-1	<88044>	.PLUG,PIPE.....		EA		3	*	*	*		*	103	54
P	F		1560-639-5975	S1565-61195	<78286>	.PLATE,IDENTIFICATION.....		EA		1	2	3	7		*	103	55
AD	D			S1565-61510	<78286>	.HOUSING ASSEMBLY.....		EA		1						103	56
P	D		1560-618-2311	S1565-61510-2	<78286>	..SPACER,SLEEVE.....		EA		1					*	103	57
P	D		1560-673-0302	S1565-61510-3	<78286>	..SPACER,SLEEVE.....		EA		1					*	103	58
P	D		1615-603-1332	S1565-61510-4	<78286>	..BUSHING,SLEEVE.....		EA		1					*	103	59
P	F		5340-291-3495	MS124697	<96906>	..INSERT,SCREW,THREAD.....		EA		2	*	*	*		*	103	60
P	D		1560-672-0055	S1565-61510-1	<78286>	..HOUSING ASSEMBLY,PEDAL..... DAMPER		EA		1					*	103	61
P	H		1560-715-2269	S1607-6544-2	<78286>	PARTS KIT,HYDRAULIC PEDAL.... DAMPER U/O 1560-589-8446 SEE FUNCTIONAL GROUP 50 FOR COMPONENTS NOTE 1 COMPONENT OF KIT 1560-715-2269		EA		1	*	2	2		*	103	
						PEDAL AND SUPPORT..... INSTALLATION										104	
				S1640-62601-1	<78286>	PEDAL AND SUPPORT..... INSTALLATION SEE FIG.101 FOR NHA		EA								104	
				S1640-61698-5	<78286>	.SUPPORT ASSEMBLY,PILOTS.....		EA		1						104	1
P	F		1560-672-0059	S1640-61698-6	<78286>	.SUPPORT ASSEMBLY,CONTROL.... ATTACHING PARTS		EA		1	*	*	*		*	104	2
			5306-182-2006	AN3H15A	<88044>	.BOLT,MACHINE.....		EA		2	*	*	*		*	104	3

SOURCE MAINT AND REC CODE			FEDERAL STOCK NUMBER	REFERENCE NUMBER		DESCRIPTION	MODELS USABLE ON CH-34C	UNIT OF ISSUE	QTY INC IN UNIT PACK	QTY INC IN UNIT	30-DAY DS GS MAINT ALW (a) 1-20	(b) 21-50	(c) 51-100	1-YR ALW PER 100 EQUIP CNTGCY	DEPOT MAINT ALW PER 100 EQUIP	ILLUSTRATION (e) FIG NO	(f) ITEM NO
			5310-167-0818	AN960-10	<88044>	.WASHER,FLAT.....		HD		4	*	*	*		*	104	
			5310-877-5797	MS21044N3	<96906>	.NUT,SELF-LOCKING,HEXAGON....		EA		2	*	*	*		*	104	
			5306-182-2057	AN3H4A	<88044>	.BOLT,MACHINE.....		HD		4	*	*	*		*	104	4
			5310-167-0818	AN960-10	<88044>	.WASHER,FLAT.....		HD		4	*	*	*		*	104	
			5310-877-5797	MS21044N3	<96906>	.NUT,SELF-LOCKING,HEXAGON....		EA		4	*	*	*		*	104	
						---*---											
AF	F			S1640-62602-1	<78286>	.PEDAL AND SUPPORT,PILOTS....		EA		1						104	
						ATTACHING PARTS											
			5306-182-2008	AN3H17A	<88044>	.BOLT,MACHINE.....		HD		1	*	*	*		*	104	6
			5310-167-0818	AN960-10	<88044>	.WASHER,FLAT.....		HD		3	*	*	*		*	104	
			5310-877-5797	MS21044N3	<96906>	.NUT,SELF-LOCKING,HEXAGON....		EA		1	*	*	*		*	104	
			5306-182-2059	AN3H6A	<88044>	.BOLT,MACHINE.....		HD		4	*	*	*		*	104	7
			5310-167-0818	AN960-10	<88044>	.WASHER,FLAT.....		HD		4	*	*	*		*	104	
			5310-877-5797	MS21044N3	<96906>	.NUT,SELF-LOCKING,HEXAGON....		EA		4	*	*	*		*	104	
						---*---											
			1560-511-5080	S1640-62605	<78286>	..PEDAL AND CONTROL.....										104	
						ASSEMBLY RPL-BY											
						PN S1640-61603											
AF	F			S1640-61603	<78286>	..PEDAL AND CONTROL.....		EA		1						104	8
						ASSEMBLY RPLS--											
						1560-511-5080											
						ATTACHING PARTS											
			5310-141-1795	AN960-416	<88044>	..WASHER,FLAT.....		HD		1	*	*	*		*	104	9
			5310-877-5796	MS21044N4	<96906>	..NUT,SELF-LOCKING,HEXAGON...		EA		1	*	*	*		*	104	
			5340-281-6623	MS16624-125	<96906>	..RING,RETAINING.....		EA		2	*	*	*		*	104	10
P	F		5340-209-4277	S1540-61657	<78286>	..SPACER,RING.....		EA		2	*	*	*		*	104	11
						---*---											
P	F		1560-622-6403	S1640-61742-2	<78286>	...LEVER.....		EA		1	*	*	*		*	104	12
						ATTACHING PARTS											
			5306-182-1922	AN3H23	<88044>	...BOLT,MACHINE.....		EA		1	*	*	*		*	104	13
			5310-167-0818	AN960-10	<88044>	...WASHER,FLAT.....		HD		2	*	*	*		*	104	
			5310-183-4406	AN960PD10	<88044>	...WASHER,FLAT.....		HD		2	*	*	*		*	104	
			5310-167-1284	AN310-3	<88044>	...NUT,CASTELLATED,HEXAGON...		HD		1	*	*	*		*	104	
			5315-234-1856	MS24665-155	<96906>	...PIN,COTTER.....		HD		1	*	*	*		*	104	
						---*---											
			5305-984-6197	MS35206-249	<96906>	...SCREW,MACHINE.....				1	*	*	*		*	104	14
			5310-184-8966	AN960PD8	<88044>	...WASHER,FLAT.....		HD		1	*	*	*		*	104	
			5310-811-3494	MS21044N08	<96906>	...NUT,SELF-LOCKING,HEXAGON..		EA		1	*	*	*		*	104	
P	F		1560-663-2942	S1640-61742-12	<78286>	...SPRING.....		EA		1	*	*	*		*	104	15
			5310-176-8135	AN340-8	<88044>	...NUT,PLAIN,HEXAGON.....		GR		1	*	*	*		*	104	16
			5305-151-2106	AN515-6-20	<88044>	...SCREW,MACHINE.....		EA		2	*	*	*		*	104	17
			5310-187-2398	AN960PD6L	<88044>	...WASHER,FLAT.....		HD		4	*	*	*		*	104	
			5310-811-3494	MS21044N08	<96906>	...NUT,SELF-LOCKING,HEXAGON..		EA		2	*	*	*		*	104	
P	F		1560-631-3641	5PA2	<54835>	...COVER,CONTROLLABLE.....		EA		1	*	2	2		*	104	18
						STABILIZER											
P	F		5930-503-1871	BZ2RDSA2	<80648>	...SWITCH,SENSITIVE.....		EA		1	*	*	*		*	104	19
P	F		3110-227-4431	B2012X0H	<60380>	...BEARING,ROLLER,NEEDLE.....		EA		2	*	*	*		*	104	20
			1560-510-4100	S1640-62604	<78286>	...CONTROL ASSEMBLY,TOE.....										104	
						BRAKE RPL-BY											
						1560-340-1110											
P	F		1560-340-1110	S1640-61605	<78286>	...CONTROL ASSEMBLY,TOE.....		EA		1	*	*	*		*	104	21
						BRAKE RPLS--											

(1) SOURCE, MAINT AND REC CODE (a) SOURCE CODE	(b) MAINT LEVEL	(c) REC CODE	(2) FEDERAL STOCK NUMBER	REFERENCE NUMBER	(3) DESCRIPTION	MODELS USABLE ON CH-34C	(4) UNIT OF ISSUE	(5) QTY INC IN UNIT PACK	(6) QTY INC IN UNIT	(7) 30-DAY DS GS MAINT ALW (a) 1-20	(b) 21-50	(c) 51-100	(8) 1 YR ALW PER 100 EQUIP CNTGCY	(9) DEPOT MAINT ALW PER 100 EQUIP	(10) ILLUSTRATION (a) FIG NO	(b) ITEM NO
					CONTINUED										104	21
					1560-510-4100											
					ATTACHING PARTS											
P	F		5310-530-9654	S1540-61626 <78286>	...WASHER,FLAT.....		EA		2	*	*	*		*	104	22
				RS93C <80756>	...RING,RETAINING.....		EA		1						104	23
					---*---											
P	F		5310-200-7749	RL24SB7 <83324>	....RING,LOCK,SERRATED.....		HD		1	*	*	*		REF	104	24
P	F		5307-207-5854	SF1019SA89A <83324>	....STUD.....		EA		1	*	*	*		*	104	25
P	F		5307-025-8284	SF101-9SA14A <83324>	....STUD,LOCKED IN.....		EA		1	*	*	2		*	104	
P	F		1560-570-0658	S1640-61607 <78286>	...PEDAL,DIRECTIONAL CONTROL.		EA		1	*	*	*		*	104	28
			1630-659-1602	11060 <99643>	..CYLINDER,BRAKE,COMPOUND....										104	
					RPL-BY 1620-028-0859											
P	O	R	1630-028-0859	HPB114100 <30028>	..CYLINDER,ASSEMBLY.....		EA		1	*	2	2	29	*	104	29
					RPLS-- 1630-659-1602											
					SEE FIG.104A FOR											
					BREAKDOWN											
					ATTACHING PARTS											
			5306-285-5325	AN174H7A <88044>	..BOLT,MACHINE.....		HD		1	*	*	*		*	104	30
			5310-141-1795	AN960-416 <88044>	..WASHER,FLAT.....		HD		2	*	*	*		*	104	
			5310-877-5796	MS21044N4 <96906>	..NUT,SELF-LOCKING,HEXAGON...		EA		1	*	*	*		*	104	
					---*---											
X2	F		1560-098-8290	S1640-61613 <78286>	..BRACKET ASSEMBLY,PILOTS....		EA		1	*	*	*		*	104	31
					BRAKE MOUNTING											
					ATTACHING PARTS											
			5306-550-3406	AN173H16A <88044>	..BOLT,MACHINE.....		EA		2	*	*	*		*	104	32
			5310-167-0818	AN960-10 <88044>	..WASHER,FLAT.....		HD		2	*	*	*		*	104	
			5310-877-5797	MS21044N3 <96906>	..NUT,SELF-LOCKING,HEXAGON...		EA		2	*	*	*		*	104	
					---*---											
P	F		1560-098-8295	S1640-61646 <78286>	..FITTING ASSEMBLY,PEDAL.....		EA		1	*	*	*		*	104	33
					ADJUSTER RPLS--											
					1560-098-8294											
					ATTACHING PARTS											
			5306-141-4507	AN173H21A <88044>	..BOLT,MACHINE.....		EA		1	*	*	*		*	104	34
			5310-183-4406	AN960PD10 <88044>	..WASHER,FLAT.....		HD		2	*	*	*		*	104	
			5310-877-5797	MS21044N3 <96906>	..NUT,SELF-LOCKING,HEXAGON...		EA		1	*	*	*		*	104	
					---*---											
P	F		1560-662-7520	S1540-61704 <78286>	...BEARING,SLEEVE.....		EA		1	*	*	*		*	104	35
				S1640-61643 <78286>	...FITTING.....		EA		1						104	36
P	F		1560-346-1158	S1625-61803 <78286>	..SUPPORT ASSEMBLY RPLS--...		EA		1	*	*	*		*	104	37
					1560-098-8297 &											
					1560-520-6322											
					ATTACHING PARTS											
			5306-156-2472	AN173H20A <88044>	..BOLT,MACHINE.....		EA		1	*	*	*		*	104	38
			5310-183-4406	AN960PD10 <88044>	..WASHER,FLAT.....		HD		2	*	*	*		*	104	
			5310-877-5797	MS21044N3 <96906>	..NUT,SELF-LOCKING,HEXAGON...		EA		1	*	*	*		*	104	
					---*---											
AF	F			S1640-61603 <78286>	..PEDAL AND CONTROL.....		EA		1						104	40
					ASSEMBLY RPLS--											
					1560-511-5080											
					ATTACHING PARTS											
			5310-141-1795	AN960-416 <88044>	..WASHER,FLAT.....		HD		1	*	*	*		*	104	41
			5310-877-5796	MS21044N4 <96906>	..NUT,SELF-LOCKING,HEXAGON...		EA		1	*	*	*		*	104	

(1) SOURCE, MAINT AND REC CODE (a) SOURCE CODE	(b) MAINT LEVEL	(c) REC CODE	(2) FEDERAL STOCK NUMBER	REFERENCE NUMBER	(3) DESCRIPTION	MODELS USABLE ON CH-34C	(4) UNIT OF ISSUE	(5) QTY INC IN UNIT PACK	(6) QTY INC IN UNIT	(7) 30-DAY DS GS MAINT ALW (a) 1-20	(b) 21-50	(c) 51-100	(8) 1 YR ALW PER 100 EQUIP CNTGCY	(9) DEPOT MAINT ALW PER 100 EQUIP	(10) ILLUSTRATION (a) FIG NO	(b) ITEM NO
			5340-281-6623	MS16624-125	<96906> ..RING,RETAINING.....		EA		2	*	*	*		*	104	42
P	F		5340-209-4277	S1540-61657	<78286> ..WASHER,FLAT.....		EA		2	*	*	*		REF	104	43
					---*---											
P	F		1560-622-6403	S1640-61742-2	<78286> ...LEVER.....		EA		1	*	*	*		REF	104	44
					ATTACHING PARTS											
			5306-182-1922	AN3H23	<88044> ...BOLT,MACHINE.....		EA		1	*	*	*		*	104	45
			5310-167-0818	AN960-10	<88044> ...WASHER,FLAT.....		HD		2	*	*	*		*	104	
			5310-183-4406	AN960PD10	<88044> ...WASHER,FLAT.....		HD		2	*	*	*		*	104	
			5310-167-1284	AN310-3	<88044> ...NUT,CASTELLATED,HEXAGON...		HD		1	*	*	*		*	104	
			5315-234-1856	MS24665-155	<96906> ...PIN,COTTER.....		HD		1	*	*	*		*	104	
					---*---											
			5305-984-6197	MS35206-249	<96906> ...SCREW,MACHINE.....				1	*	*	*		*	104	46
			5310-184-8966	AN960PD8	<88044> ...WASHER,FLAT.....		HD		1	*	*	*		*	104	
			5310-811-3494	MS21044N08	<96906> ...NUT,SELF-LOCKING,HEXAGON..		EA		1	*	*	*		*	104	
P	F		1560-663-2942	S1640-61742-12	<78286> ...SPRING,HELICAL COMPRESSION		EA		1	*	*	*		REF	104	47
			5310-176-8135	AN340-8	<88044> ...NUT,PLAIN,HEXAGON.....		GR		1	*	*	*		*	104	48
			5305-151-2106	AN515-6-20	<88044> ...SCREW,MACHINE.....		EA		2	*	*	*		*	104	49
			5310-187-2398	AN960PD6L	<88044> ...WASHER,FLAT.....		HD		4	*	*	*		*	104	
			5310-081-8087	MS21044N06	<96906> ...NUT,SELF-LOCKING,HEXAGON..		EA		2	*	*	*		*	104	
P	F		1560-631-3641	5PA2	<54835> ...COVER,CONTROLLABLE.....		EA		1	*	REF	REF		REF	104	50
					STABILIZER											
P	F		5930-503-1871	BZ2RDSA2	<80648> ...SWITCH,SENSITIVE.....		EA		1	*	*	*		REF	104	51
P	F		3110-227-4431	B2012X0H	<60380> ...BEARING,ROLLER,NEEDLE.....		EA		2	*	*	*		REF	104	52
P	F		1560-340-1110	S1640-61605	<78286> ...CONTROL ASSEMBLY,TOE.....		EA		1	*	*	*		REF	104	53
					BRAKE RPLS--											
					1560-510-4100											
P	F		5310-530-9654	S1540-61626	<78286> ...WASHER,FLAT.....		EA		2	*	*	*		REF	104	54
P	F		5310-200-7749	RL24S87	<83324> ....RING,LOCK,SERRATED.....		HD		1	*	*	*		REF	104	56
P	F		5307-207-5854	SF1019SA89A	<83324> ....STUD.....		EA		1	*	*	*		REF	104	57
P	F		3110-120-3102	B1516	<60380> ....BEARING,ROLLER,NEEDLE....		EA		2					REF	104	58
P	F		1560-570-0658	S1640-61607	<78286> ...PEDAL,DIRECTIONAL CONTROL.		EA		1	*	*	*		REF	104	60
P	O	R	1630-028-0859	HPB114100	<30028> ..CYLINDER,BRAKE,COMPOUND....		EA		1	*	REF	REF	REF	REF	104	61
					RPLS-- 1630-659-1602											
					SEE FIG.104A FOR											
					BREAKDOWN											
					ATTACHING PARTS											
			5306-285-5325	AN174H7A	<88044> ..BOLT,MACHINE.....		HD		1	*	*	*		*	104	62
			5310-141-1795	AN960-416	<88044> ..WASHER,FLAT.....		HD		2	*	*	*		*	104	
			5310-877-5796	MS21044N4	<96906> ..NUT,SELF-LOCKING,HEXAGON...		EA		1	*	*	*		*	104	
					---*---											
P	F		1560-510-4098	S1640-61734	<78286> ..SUPPORT ASSEMBLY,PILOTS....		EA		1	*	*	*		*	104	63
					PEDAL											
P	F		1560-098-8292	S1640-61623-2	<78286> .FITTING,FLIGHT CONTROLS.....		EA		1	*	*	*		*	104	64
					ATTACHING PARTS											
			5306-182-2015	AN4H4A	<88044> .BOLT,MACHINE.....		HD		3	*	*	*		*	104	65
			5310-141-1795	AN960-416	<88044> .WASHER,FLAT.....		HD		3	*	*	*		*	104	
					---*---											
AF	F			S1640-61616-1	<78286> .PEDAL AND SUPPORT.....		EA		1						104	
					ASSEMBLY,CO-PILOTS											
					ATTACHING PARTS											
			5306-182-2008	AN3H17A	<88044> .BOLT,MACHINE.....		HD		1	*	*	*		*	104	66
			5310-167-0818	AN960-10	<88044> .WASHER,FLAT.....		HD		3	*	*	*		*	104	

(1) SOURCE, MAINT AND REC CODE (a) SOURCE CODE	(b) MAINT LEVEL	(c) REC CODE	(2) FEDERAL STOCK NUMBER	REFERENCE NUMBER	(3) DESCRIPTION	MODELS USABLE ON CH-34C	(4) UNIT OF ISSUE	(5) QTY INC IN UNIT PACK	(6) QTY INC IN UNIT	(7) 30-DAY DS/GS MAINT ALW (a) 1-20	(b) 21-50	(c) 51-100	(8) 1-YR ALW PER 100 EQUIP CNTGCY	(9) DEPOT MAINT ALW PER 100 EQUIP	(10) ILLUSTRATION (a) FIG NO	(b) ITEM NO
			5310-877-5797	MS21044N3	<96906> .NUT,SELF-LOCKING,HEXAGON....		EA		1	*	*	*		*	104	
			5306-182-2059	AN3H6A	<88044> .BOLT,MACHINE.....		HD		4	*	*	*		*	104	67
			5310-167-0818	AN960-10	<88044> .WASHER,FLAT.....		HD		4	*	*	*		*	104	
			5310-877-5797	MS21044N3	<96906> .NUT,SELF-LOCKING,HEXAGON....		EA		4	*	*	*		*	104	
					---*---											
P	F		1560-511-5081	S1640-62606	<78286> ..PEDAL ASSEMBLY.....CODE A		EA		1	*	*	*		*	104	68
P	F		1560-334-6392	S1640-61617	<78286> ..PEDAL ASSEMBLY.....CODE B		EA		1	*	*	*		*	104	
					ATTACHING PARTS											
			5340-281-6623	MS16624-125	<96906> ..RING,RETAINING.....		EA		2	*	*	*		*	104	69
P	F		5340-209-4277	S1540-61657	<78286> ..WASHER,FLAT.....		EA		2	*	*	*		REF	104	70
					---*---											
P	F		1560-787-2436	S1640-61742-1	<78286> ...LEVER,FLIGHT CONTROLS.....		EA		1	*	*	*		*	104	71
					ATTACHING PARTS											
			5306-151-1962	AN23-10	<88044> ...BOLT,CLEVIS.....		EA		1	*	*	*		*	104	72
			5310-167-0818	AN960-10	<88044> ...WASHER,FLAT.....		HD		3	*	*	*		*	104	
			5310-285-2177	AN320-3	<88044> ...NUT,SLOTTED,HEXAGON.....		HD		2	*	*	*		*	104	
			5315-234-1856	MS24665-155	<96906> ...PIN,COTTER.....		HD		2	*	*	*		*	104	
			5306-151-2305	AN23-26	<88044> ...BOLT,CLEVIS.....		EA		1	*	*	*		*	104	73
			5305-990-6444	MS35207-261	<96906> ...SCREW,MACHINE.....		HD		1	*	*	*		*	104	74
			5310-167-0818	AN960-10	<88044> ...WASHER,FLAT.....		HD		1	*	*	*		*	104	
			5310-877-5797	MS21044N3	<96906> ...NUT,SELF-LOCKING,HEXAGON..		EA		1	*	*	*		*	104	
					---*---											
P	F		1560-663-2936	S1640-61742-11	<78286> ...SPRING,HELICAL,COMPRESSION		EA		1	*	*	2		*	104	75
			5310-167-0818	AN960-10	<88044> ...WASHER,FLAT.....		HD		1	*	*	*		*	104	76
			5310-167-1343	AN315-3R	<88044> ...NUT,C'STELLATED,HEXAGON...		HD		1	*	*	*		*	104	
			5305-550-3131	AN515-6-36	<88044> ...SCREW,MACHINE.....		EA		2	*	*	*			104	77
			5310-167-0816	AN960-6	<88044> ...WASHER,FLAT.....		HD		4	*	*	*		*	104	
			5310-081-8087	MS21044N06	<96906> ...NUT,SELF-LOCKING,HEXAGON..		EA		2	*	*	*		*	104	
P	F		1560-631-3641	5PA2	<54835> ...COVER,CONTROLLABLE.....		EA		1	*	REF	REF		REF	104	78
					STABILIZER											
P	F		5930-503-1871	BZ2RDSA2	<80648> ...SWITCH,SENSITIVE.....		EA		1	*	*	*		REF	104	79
P	F		3110-227-4431	B2012X0H	<60380> ...BEARING,ROLLER,NEEDLE.....		EA		2	*	*	*		REF	104	80
P	F		1560-098-8295	S1640-61646	<78286> ..FITTING ASSEMBLY,PEDAL.....		EA		1	*	*	*		REF	104	82
					ADJUSTER RPLS--											
					1560-098-8295											
					ATTACHING PARTS											
			5306-141-4507	AN173H21A	<88044> ..BOLT,MACHINE.....		EA		1	*	*	*		*	104	83
			5310-183-4406	AN960PD10	<88044> ..WASHER,FLAT.....		HD		2	*	*	*		*	104	
			5310-877-5797	MS21044N3	<96906> ..NUT,SELF-LOCKING,HEXAGON...		EA		1	*	*	*		*	104	
					---*---											
P	F		1560-511-5081	S1640-62606	<78286> ..PEDAL ASSEMBLY.....CODE A		EA		1	*	*	*		REF	104	84
P	F		1560-334-6392	S1640-61617	<78286> ..PEDAL ASSEMBLY.....CODE B		EA		1	*	*	*		REF	104	
					ATTACHING PARTS											
			5340-281-6623	MS16624-125	<96906> ..RING,RETAINING.....		EA		2	*	*	*		*	104	85
P	F		5340-209-4277	S1540-61657	<78286> ..WASHER,FLAT.....		EA		2	*	*	*		REF	104	86
					---*---											
P	F		1560-787-2436	S1640-61742-1	<78286> ...LEVER,FLIGHT CONTROLS.....		EA		1	*	*	*		REF	104	87
					ATTACHING PARTS											
			5306-151-1962	AN23-10	<88044> ...BOLT,CLEVIS.....		EA		1	*	*	*		*	104	88
			5310-167-0818	AN960-10	<88044> ...WASHER,FLAT.....		HD		3	*	*	*		*	104	
			5310-285-2177	AN320-3	<88044> ...NUT,SLOTTED,HEXAGON.....		HD		2	*	*	*		*	104	
			5315-234-1856	MS24665-155	<96906> ...PIN,COTTER.....		HD		2	*	*	*		*	104	

(1) SOURCE, MAINT AND REC CODE (a) SOURCE CODE	(b) MAINT LEVEL	(c) REC CODE	(2) FEDERAL STOCK NUMBER	REFERENCE NUMBER		(3) DESCRIPTION	MODELS USABLE ON CH-34C	(4) UNIT OF ISSUE	(5) QTY INC IN UNIT PACK	(6) QTY INC IN UNIT	(7) 30-DAY DS, GS MAINT ALW (a) 1-20	(b) 21-50	(c) 51-100	(8) 1-YR ALW PER 100 EQUIP CNTGCY	(9) DEPOT MAINT ALW PER 100 EQUIP	(10) ILLUSTRATION (a) FIG NO	(b) ITEM NO
			5306-151-2305	AN23-26	<88044>	...BOLT,CLEVIS.....		EA		1	*	*	*		*	104	89
			5305-274-1738	AN526-1032R36	<88044>	...SCREW,MACHINE.....		EA		1						104	90
			5310-167-0818	AN960-10	<88044>	...WASHER,FLAT.....		HD		1	*	*	*		*	104	
			5310-877-5797	MS21044N3	<96906>	...NUT,SELF-LOCKING,HEXAGON..		EA		1	*	*	*		*	104	
						---*---											
P	F		1560-663-2936	S1640-61742-11	<78286>	...SPRING,HELICAL,COMPRESSION		EA		1	*	*	REF		REF	104	91
			5310-167-0818	AN960-10	<88044>	...WASHER,FLAT.....		HD		1	*	*	*		*	104	92
			5310-167-1343	AN315-3R	<88044>	...NUT,CASTELLATION,HEXAGON..		HD		1	*	*	*		*	104	
			5305-151-2106	AN515-6-20	<88044>	...SCREW,MACHINE.....		EA		2	*	*	*		*	104	93
			5310-167-0816	AN960-6	<88044>	...WASHER,FLAT.....		HD		4	*	*	*		*	104	
			5310-081-8087	MS21044N06	<96906>	...NUT,SELF-LOCKING,HEXAGON..		EA		2	*	*	*		*	104	
P	F		1560-631-3641	5PA2	<54835>	...COVER,CONTROLLABLE..... STABILIZER		EA		1	*	REF	REF		REF	104	94
P	F		5930-503-1871	BZ2RDSA2	<80648>	...SWITCH,SENSITIVE.....		EA		1	*	*	*		REF	104	95
P	F		3110-227-4431	B2012X0H	<60380>	...BEARING,ROLLER,NEEDLE.....		EA		2	*	*	*		REF	104	96
X2	F			S1640-61697-2	<78286>	..FITTING..... ATTACHING PARTS		EA		1						104	
			5315-200-2282	AN386-3-14	<88044>	..PIN,TAPERED,THREADED.....		EA		1	*	*	*		*	104	
			5310-167-0686	AN975-4	<88044>	..WASHER,RECESSED.....		HD		1	*	*	*		*	104	
			5310-176-8108	AN320-4	<88044>	..NUT,SLOTTED,HEXAGON.....		HD		1	*	*	*		*	104	
			5315-234-1856	MS24665-155	<96906>	..PIN,COTTER.....		HD		1	*	*	*		*	104	
						---*---											
X2	F			S1640-61685-2	<78286>	..FILLER.....		EA		1						104	
P	F		1560-510-4099	S1640-61735	<78286>	..SUPPORT ASSEMBLY,PEDAL..... MOUNTING		EA		1	*	*	*		*	104	98
P	F		1560-098-8291	S1640-61623-1	<78286>	.FITTING,FLIGHT CONTROLS..... ATTACHING PARTS		EA		1	*	*	*		*	104	99
			5306-182-2015	AN4H4A	<88044>	.BOLT,MACHINE.....		HD		3	*	*	*		*	104	100
			5310-141-1795	AN960-416	<88044>	.WASHER,FLAT.....		HD		3	*	*	*		*	104	
						---*---											
						CODE A											
						USBL EFF 53-4475 THRU 57-1741											
						CODE B											
						USBL EFF 57-1742 & SUBSEQUENT											
P	O	R	1630-028-0859	HPB114100	<84685>	CYLINDER ASSEMBLY SEE FIG... 104 FOR NHA		EA		1	*	REF	REF	REF	*	104A	
				HPB114134	<84685>	.NAMEPLATE.....NOTE 2 ATTACHING PARTS		EA		1						104A	1
			5305-253-5603	MS21318-1	<96906>	.SCREW,DRIVE.....NOTE 2		HD		2	*	*	*		*	104A	2
						---*---											
P	H		3120-661-7536	HF4	<84685>	.BEARING.....		EA		1	*	*	*		*	104A	3
P	H		5310-282-4777	HPB114122	<84685>	.NUT,PLAIN,HEXAGON.....NOTE 2		HD		1	*	*	*		*	104A	4
			5305-719-5342	MS51963-34	<96906>	.SETSCREW.....		EA		1	*	*	*		*	104A	5
P	H		1630-341-7132	HPB114109	<84685>	.CAP,END,BRAKE CYLINDER.....		EA		1	*	*	2		*	104A	6
			5330-582-2133	MS28775-011	<96906>	.PACKING,PREFORMED.....NOTE 1		EA		1	*	*	*		*	104A	7
			5330-684-3419	MS28775-016	<96906>	.PACKING,PREFORMED.....NOTE 1		EA		1	*	*	*		*	104A	8

(1) SOURCE, MAINT AND REC CODE (a) SOURCE CODE	(b) MAINT LEVEL	(c) REC CODE	(2) FEDERAL STOCK NUMBER	REFERENCE NUMBER	(3) DESCRIPTION	MODELS USABLE ON CH-34C	(4) UNIT OF ISSUE	(5) QTY INC IN UNIT PACK	(6) QTY INC IN UNIT	(7) 30-DAY DS GS MAINT ALW (a) 1-20	(b) 21-50	(c) 51-100	(8) 1-YR ALW PER 100 EQUIP CNTGCY	(9) DEPOT MAINT ALW PER 100 EQUIP	(10) ILLUSTRATION (a) FIG NO	(b) ITEM NO
P	H		1630-341-7142	HPB114128 <84685>	.PLUNGER,CYLINDER.....		EA		1	*	*	2		*	104A	9
			5330-582-2855	MS28775-113 <96906>	.PACKING,PREFORMED.....NOTE 1		EA		1	*	*	*		*	104A	10
				AN6227-20 <88044>	.PACKING.....NOTE 1		EA		1						104A	11
				HPB114129 <84685>	.SPRING,HELICAL,COMPRESSION.. NOTE 2		EA		1						104A	12
P	H		4730-529-3278	HPB114132 <84685>	.PLUG,MACHINE THREAD...NOTE 2		EA		1	*	*	*		*	104A	13
				HPB114133 <84685>	.CAP,SEAL.....NOTE 2		EA		1						104A	14
P	H		1630-341-7147	HPB114503 <84685>	.VENT ASSEMBLY.....		EA		1	*	2	2	14	*	104A	15
			5305-724-6740	MS51965-17 <96906>	.SETSCREW.....		EA		1	*	*	*		*	104A	16
P	H		1630-341-7133	HPB114110 <84685>	.NUT,HOUSING.....		EA		1	*	2	2		*	104A	17
P	H		1630-341-7131	HPB114101 <84685>	.CYLINDER,PRIMARY.....		EA		1	*	*	*		*	104A	18
P	H		1630-341-7146	HPB114501 <84685>	.HOUSING ASSEMBLY,RESERVOIR..		EA		1	*	2	2		*	104A	19
			5330-297-9990	MS28775-222 <96906>	.PACKING,PREFORMED.....NOTE 1		EA		1	*	*	*		*	104A	20
P	F		5310-515-8716	HPB114119 <84685>	.NUT,CHECK.....NOTE 2		EA		1	*	*	*		*	104A	21
				HPB114120 <84685>	.DISK.....NOTE 2		EA		1						104A	22
P	H		5305-347-0300	HPB114118 <84685>	.SCREW,MACHINE.....		EA		1	*	*	*		*	104A	23
				HPB114117 <84685>	.SPRING,HELICAL,COMPRESSION.. NOTE 2		EA		1						104A	24
			5305-719-5342	MS51963-34 <96906>	.SETSCREW.....NOTE 2		EA		1	*	*	*		*	104A	25
				HPB114113 <84685>	.CYLINDER,SECONDARY BRAKE.... NOTE 1		EA		1						104A	26
				HPB114114 <84685>	.WASHER,FLAT.....NOTE 2		EA		1						104A	27
			5330-050-1224	AN6227B13 <88044>	.PACKING,PREFORMED.....NOTE 1		EA		1	*	*	*		*	104A	28
P	H		1630-341-7141	HPB114127 <84685>	.SHAFT,ACTUATING.....		EA		1	*	2	2	19	*	104A	29
				HPC104114 <84685>	.SPRING,HELICAL,COMPRESSION.. NOTE 2		EA		1						104A	30
P	H		5340-345-4451	HPB114124 <84685>	.RETAINER,RING.....		EA		1	*	*	2		*	104A	31
			5330-350-9013	MS29513-112 <96906>	.PACKING,PREFORMED.....NOTE 1		EA		1	*	*	*		*	104A	32
P	H		1630-341-7139	HPB114123 <84685>	.VALVE,CHECK.....		EA		1	*	2	2		*	104A	33
			5330-579-3158	MS28775-008 <96906>	.PACKING,PREFORMED.....NOTE 1		EA		1	*	*	*		*	104A	34
P	H		1630-341-7140	HPB114126 <84685>	.HOUSING,VALVE.....		EA		1	*	*	*		*	104A	35
				HPB114136 <84685>	.SPRING,HELICAL,COMPRESSION.. NOTE 2		EA		1						104A	36
P	H		1630-341-7134	HPB114111 <84685>	.PISTON,PRIMARY CYLINDER.....		EA		1	*	*	*		*	104A	37
				AN6227-20 <88044>	.PACKING.....NOTE 1		EA		1						104A	38
P	H		1630-320-7155	HPB114502 <84685>	.VALVE ASSEMBLY.....		EA		1	*	2	2	17	*	104A	39
X1				HPB114116 <84685>	..SPOOL,VALVE.....		EA		1						104A	40
X1				HPB114115 <84685>	..SLEEVE,VALVE.....		EA		1						104A	41
			5330-050-1211	AN622788 <88044>	.PACKING,PREFORMED.....NOTE 1		EA		1	*	*	*		*	104A	42
P	H		1630-341-7138	HPB114121 <84685>	.PLUNGER,SPRING.....		EA		1	*	2	2		*	104A	43
			5330-171-8068	AN6227-15 <88044>	.PACKING,PREFORMED.....NOTE 1		EA		1	*	*	*		*	104A	44
P	H		1630-343-4614	HPB114112 <84685>	.CAP,VALVE HOUSING.....		EA		1	*	*	2		*	104A	45
P	F		1620-777-0011	1143 <84685>	REPAIR KIT,MASTER CYLINDER... U/O 1620-028-0859 SEE FUNCTIONAL GROUP 50 FOR COMPONENTS		EA		1	2	5	9	113	*	104A	
P	H		1630-778-2232	1142 <84685>	REPAIR KIT,MASTER CYLINDER... U/O 1620-028-0859 SEE FUNCTIONAL GROUP 50 FOR COMPONENTS NOTE 1 COMPONENT OF KIT		EA		1	*	2	2	26	*	104A	

(1) SOURCE, MAINT AND REC CODE (a) SOURCE CODE	(b) MAINT LEVEL	(c) REC CODE	(2) FEDERAL STOCK NUMBER	REFERENCE NUMBER	(3) DESCRIPTION	MODELS USABLE ON CH-34C	(4) UNIT OF ISSUE	(5) QTY INC IN UNIT PACK	(6) QTY INC IN UNIT	(7) 30-DAY DS/GS MAINT ALW (a) 1-20	(b) 21-50	(c) 51-100	(8) 1-YR ALW PER 100 EQUIP CNTGCY	(9) DEPOT MAINT ALW PER 100 EQUIP	(10) ILLUSTRATION (a) FIG NO	(b) ITEM NO
					CONTINUED 1620-777-0011 NOTE 2 COMPONENT OF KIT 1630-778-2232										104A	
				S1665-61613-4 <78286>	TAIL ROTOR SERVO UNIT..... INSTALLATION SEE FIG.101 FOR NHA		EA								105	
				S1620-61835-3 <78286>	.BLOCK..... ATTACHING PARTS		EA		1						105	1
			5306-182-2060	AN3H7A <88044>	.BOLT,MACHINE..... ---*---		HD		4	*	*	*		*	105	2
P	F		1560-560-9143	S1620-61835-1 <78286>	..CLAMP,HALF,SERVO SUPPORT...		EA		1	*	*	*		*	105	3
P	F		1560-570-0596	S1620-61835-2 <78286>	..CLAMP,HALF,SUPPORT.....		EA		1	*	*	*		*	105	4
			5310-167-1343	AN315-3R <88044>	.NUT,CASTELLATION,HEXAGON....		HD		1	*	*	*		*	105	5
P	F		5310-558-7115	S1640-61719 <78286>	.NUT.....		EA		1	*	*	*		*	105	6
			5315-234-1856	MS24665-155 <96906>	.PIN,COTTER.....		HD		1	*	*	*		*	105	7
			5315-234-1856	MS24665-155 <96906>	.PIN,COTTER.....		HD		1	*	*	*		*	105	8
			1560-305-4192	S1640-61717 <78286>	.LINK ASSEMBLY RPL-BY..... 1560-606-7523										105	
P	F		1560-606-7523	S1640-61717-1 <78286>	.LINK ASSEMBLY,HYDRAULIC..... RPLS-- 1560-305-4192 ATTACHING PARTS		EA		1	*	*	*		*	105	9
			5306-550-3408	AN174H13A <88044>	.BOLT,MACHINE.....		HD		1	*	*	*		*	105	10
			5310-141-1795	AN960-416 <88044>	.WASHER,FLAT.....		HD		2	*	*	*		*	105	
			5310-877-5796	MS21044N4 <96906>	.NUT,SELF-LOCKING,HEXAGON....		EA		1	*	*	*		*	105	
			5306-182-1959	AN4H11A <88044>	.BOLT,MACHINE.....		HD		1	*	*	*		*	105	11
			5310-184-9001	AN960PD416L <88044>	.WASHER,FLAT..... ---*---		HD		1	*	*	*		*	105	
P	H		6615-591-6695	S1640-61715 <78286>	..BUSHING.....		EA		1	*	*	*		*	105	12
P	F		3120-529-8377	NAS538-4-20 <80205>	..BUSHING,SLEEVE.....		EA		1	*	*	*		*	105	13
P	F		3110-142-4314	AN200KS4 <88044>	..BEARING,BALL,AIRFRAME.....		EA		1	*	*	*		REF	105	14
P	F		1560-709-8625	S1665-61555-1 <78286>	.SPRING,CYLINDER ASSEMBLY.... RPLS-- 1560-340-1191 ATTACHING PARTS		EA		1	*	2	2		*	105	15
			5306-151-1966	AN23-14 <88044>	.BOLT,CLEVIS.....		EA		1	*	*	*		*	105	16
			5310-183-4406	AN960PD10 <88044>	.WASHER,FLAT.....		HD		1	*	*	*		*	105	
			5310-807-1467	MS21042-3 <96906>	.NUT,SELF-LOCKING,HEXAGON....				1	*	*	*		*	105	
			5305-058-5049	MS24694S111 <96906>	.SCREW,MACHINE.....		HD		1	*	*	*		*	105	17
			5310-187-2354	AN960PD416 <88044>	.WASHER,FLAT.....		HD		1	*	*	*		*	105	
			5310-543-4443	MS20364-428A <96906>	.NUT,SELF-LOCKING,HEXAGON....		HD		1	*	*	*		*	105	
P	H		1650-567-6933	S1665-61564 <78286>	..ROD END.....		EA		1	*	*	2		*	105	18
			5310-209-3573	NAS513-5 <80205>	..WASHER,KEY.....		EA		1	*	*	*			105	19
			5310-208-3755	NAS509-5 <80205>	..NUT,PLAIN,HEXAGON.....		EA		1	*	*	*		*	105	
			5310-088-0553	MS21044N5 <96906>	..NUT,SELF-LOCKING,HEXAGON...		HD		1	*	*	*		*	105	20

(1) SOURCE, MAINT AND REC CODE (a) SOURCE CODE	(b) MAINT LEVEL	(c) REC CODE	(2) FEDERAL STOCK NUMBER	REFERENCE NUMBER	(3) DESCRIPTION	MODELS USABLE ON CH-34C	(4) UNIT OF ISSUE	(5) QTY INC IN UNIT PACK	(6) QTY INC IN UNIT	(7) 30-DAY DS/GS MAINT ALW (a) 1-20	(b) 21-50	(c) 51-100	(8) 1-YR ALW PER 100 EQUIP CNTGCY	(9) DEPOT MAINT ALW PER 100 EQUIP	(10) ILLUSTRATION (a) FIG NO	(b) ITEM NO
P	D		5310-559-1145	S1665-61562	<78286> ..NUT,PLAIN,HEXAGON.....		EA		1					*	105	21
			5310-209-4097	NAS513-14	<80205> ..WASHER,KEY.....		EA		1	*	*	*		*	105	22
P	F		1560-663-1630	S1665-61557	<78286> ..SPRING.....		EA		1	*	*	*		*	105	25
			6615-591-6571	S1665-61563	<78286> ..FORK ASSEMBLY.....		EA		1	*	*	*			105	28
			5310-209-3573	NAS513-5	<80205> ..WASHER,KEY.....		EA		1	*	*	*			105	29
			5310-208-3755	NAS509-5	<80205> ..NUT,PLAIN,HEXAGON.....		EA		1	*	*	*		*	105	
P	H		6615-591-6572	S1665-61565	<78286> ..ROD,HYDRAULIC SYSTEM,TAIL.. ROTOR		EA		1	*	*	*		*	105	30
					ATTACHING PARTS											
				S1665-61601	<78286> ..CLAMP,LOOP.....		EA		1						105	32
MF	O			S1665-61600	<78286> ..CLAMP,LOOP..... MAKEFR		EA		1						105	33
					AR 9535-167-2248 AL ALLY SH											
X1				S1665-61556-1	<78286> ..HOUSING.....		EA		1						105	
P	F		1560-570-0681	S1665-61602	<78286> .LUG ASSEMBLY..... ATTACHING PARTS		EA		1	*	*	*		*	105	35
			5305-989-7435	MS35207-264	<96906> .SCREW,MACHINE.....		HD		4	*	*	*		*	105	36
			5310-167-0753	AN960PD10L	<88044> .WASHER,FLAT.....		HD		4	*	*	*		*	105	
					---*---											
P	F		1615-510-4097	S1640-61704	<78286> .ARM ASSEMBLY..... ATTACHING PARTS		EA		1	*	*	*		*	105	37
			5306-141-4511	AN174H20A	<88044> .BOLT,MACHINE.....		EA		1	*	*	*		*	105	38
			5310-141-1795	AN960-416	<88044> .WASHER,FLAT.....		HD		2	*	*	*		*	105	
			5310-877-5796	MS21044N4	<96906> .NUT,SELF-LOCKING,HEXAGON....		EA		1	*	*	*		*	105	
			5306-182-2058	AN3H5A	<88044> .BOLT,MACHINE.....		EA		2	*	*	*		*	105	39
			5310-167-0753	AN960PD10L	<88044> .WASHER,FLAT.....		HD		4	*	*	*		*	105	
			5305-984-7342	MS35191-274	<96906> .SCREW,MACHINE.....		EA		1	*	*	*		*	105	40
					---*---											
P	F		3110-142-4456	AN201KP4A	<88044> ..BEARING,BALL,AIRFRAME.....		EA		2	*	*	*		REF	105	41
P	F	T	1650-627-8104	S1665-61752	<78286> .SERVO UNIT ASSEMBLY,TAIL.... ROTOR SEE FIG.106 FOR BREAKDOWN		EA		1	*	2	2	22	*	105	43
					ATTACHING PARTS											
			5306-182-2060	AN3H7A	<88044> .BOLT,MACHINE.....		HD		1	*	*	*		*	105	44
			5310-167-0753	AN960PD10L	<88044> .WASHER,FLAT.....		HD		2	*	*	*		*	105	
			5306-579-0345	AN174H47A	<88044> .BOLT,MACHINE.....		EA		2	*	*	*		*	105	45
P	F		1650-803-6399	S1665-61553-3	<78286> .HOUSING ASSEMBLY.....		EA		1	*	*	*		*	105	45A
			5310-184-9001	AN960PD416L	<88044> .WASHER,FLAT.....		HD		4	*	*	*		*	105	
			5310-877-5796	MS21044N4	<96906> .NUT,SELF-LOCKING,HEXAGON....		EA		2	*	*	*		*	105	
					---*---											
			5340-827-4069	NAS43DD0-3	<80205> ..SPACER,RING.....		EA		1	*	*	*		*	105	
			5315-988-7660	MS20392-1C59	<96906> .PIN,STRAIGHT,HEADED.....		EA		2	*	*	*		*	105	47
			5315-234-1856	MS24665-155	<96906> .PIN,COTTER.....		HD		2	*	*	*		*	105	
			5315-080-1942	MS20392-1C33	<96906> .PIN,STRAIGHT,HEADED.....		EA		4	*	*	*		*	105	48
			5315-234-1856	MS24665-155	<96906> .PIN,COTTER.....		HD		4	*	*	*		*	105	
			5315-080-1943	MS20392-1C29	<96906> .PIN,STRAIGHT,HEADED.....		EA		2	*	*	*		*	105	49
			5315-234-1856	MS24665-155	<96906> .PIN,COTTER.....		HD		2	*	*	*		*	105	
AF	F			S1640-61750	<78286> .PEDESTAL ASSEMBLY..... ATTACHING PARTS		EA		1						105	50
			5306-151-1193	AN175H47	<88044> .BOLT,MACHINE.....		EA		1	*	*	*		*	105	51
			5310-184-8980	AN960PD516L	<88044> .WASHER,FLAT.....		HD		1	*	*	*		*	105	

(1) SOURCE, MAINT AND REC CODE (a) SOURCE CODE	(b) MAINT CODE	(c) REC CODE	(2) FEDERAL STOCK NUMBER	REFERENCE NUMBER	(3) DESCRIPTION	MODELS USABLE ON CH-34C	(4) UNIT OF ISSUE	(5) QTY INC IN UNIT PACK	(6) QTY INC IN UNIT	(7) 30-DAY DS GS MAINT ALW (a) 1-20	(b) 21-50	(c) 51-100	(8) 1-YR ALW PER 100 EQUIP CNTGCY	(9) DEPOT MAINT ALW PER 100 EQUIP	(10) ILLUSTRATION (a) FIG NO	(b) ITEM NO
			5306-817-5982	AN175CH50 <88044>	.BOLT,MACHINE.....		EA		1	*	*	*		*	105	52
			5310-184-8980	AN960PD516L <88044>	.WASHER,FLAT.....		HD		1	*	*	*		*	105	
					---*---											
P	F		1650-692-2635	S1665-61566 <78286>	..CAM SET,TAIL ROTOR SERVO... AUTO-PILOT ATTACHING PARTS		EA		1	*	*	*		*	105	53
			5306-182-2009	AN3H20A <88044>	..BOLT,MACHINE.....		HD		2	*	*	*		*	105	54
			5310-167-0818	AN960-10 <88044>	..WASHER,FLAT.....		HD		4	*	*	*		*	105	
			5310-807-1467	MS21042-3 <96906>	..NUT,SELF-LOCKING,HEXAGON...				2	*	*	*		*	105	
					---*---											
MF	F			S1640-61709 <78286>	..SPACER,TAIL ROTOR..... MAKEFR AR 5340-727-1891 BUSHING		EA		2						105	55
			3020-277-1123	AN220-2 <88044>	..PULLEY,GROOVED..... ATTACHING PARTS		EA		1	*	*	*		*	105	56
			5306-141-4766	NAS464-5-29 <80205>	..BOLT,SHEAR.....		EA		1	*	*	*		*	105	57
			5310-167-0820	AN960-516 <88044>	..WASHER,FLAT.....		HD		2	*	*	*		*	105	
			5310-660-3381	MS21083N5 <96906>	..NUT,SELF-LOCKING,HEXAGON...				1	*	*	*		*	105	
					---*---											
P	F		3110-142-4464	MS20201KP5A <96906>	..BEARING,BALL,AIRFRAME.....		EA		2	*	*	*		REF	105	58
			3020-277-1123	AN220-2 <88044>	..PULLEY,GROOVED..... ATTACHING PARTS		EA		2	*	*	*		*	105	59
			5306-180-2725	AN5H32 <88044>	..BOLT,MACHINE.....		LL		1	*	*	*		*	105	60
			5310-167-0836	AN960-516L <88044>	..WASHER,FLAT.....		HD		1	*	*	*		*	105	
			5310-184-8980	AN960PD516L <88044>	..WASHER,FLAT.....		HD		1	*	*	*		*	105	
			5310-176-8109	AN320-5 <88044>	..NUT,SLOTTED,HEXAGON.....		HD		1	*	*	*		*	105	
			5315-234-1856	MS24665-155 <96906>	..PIN,COTTER.....		HD		1	*	*	*		*	105	
					---*---											
P	F		1560-587-6297	S1640-61708-1 <78286>	..WASHER,TAIL ROTOR.....		EA		1	2	2	3		*	105	61
P	F		3110-142-4464	MS20201KP5A <96906>	..BEARING,BALL,AIRFRAME.....		EA		2	*	*	*		REF	105	62
P	F		1560-671-5305	S1640-61711-3 <78286>	..PEDESTAL ASSEMBLY RPLS--.. 1560-340-1885		EA		1	*	*	2		*	105	63
			3020-277-1123	AN220-2 <88044>	..PULLEY,GROOVED..... ATTACHING PARTS		EA		1	*	*	*		*	105	64
			5306-151-3538	AN25-24A <88044>	..BOLT.....		EA		1	*	*	*		*	105	65
			5310-187-2399	AN960PD516 <88044>	..WASHER,FLAT.....		HD		1	*	*	*		*	105	
			5310-660-3381	MS21083N5 <96906>	..NUT,SELF-LOCKING,HEXAGON...				1	*	*	*		*	105	
					---*---											
			1560-566-3245	S1640-61701 <78286>	..SUPPORT ASSEMBLY,PULLEY.... RPL-BY 1560-601-0298										105	
P	F		1560-601-0298	S1640-61701-5 <78286>	..SUPPORT ASSEMBLY RPLS--... 1560-308-3539, 1560-340-1884,& 1560-566-3245		EA		1	*	*	2		*	105	66
					SERVO UNIT ASSEMBLY,TAIL..... ROTOR										106	

(1) SOURCE, MAINT AND REC CODE (a) SOURCE CODE	(b) MAINT LEVEL	(c) REC CODE	(2) FEDERAL STOCK NUMBER	REFERENCE NUMBER		(3) DESCRIPTION	MODELS USABLE ON CH-34C	(4) UNIT OF ISSUE	(5) QTY INC IN UNIT PACK	(6) QTY INC IN UNIT	(7) 30-DAY DS GS MAINT ALW (a) 1-20	(b) 21-50	(c) 51-100	(8) 1-YR ALW PER 100 EQUIP CNTGCY	(9) DEPOT MAINT ALW PER 100 EQUIP	(10) ILLUSTRATION (a) FIG NO	(b) ITEM NO
P	F	T	1650-627-8104	S1665-61752	<78286>	SERVO UNIT ASSEMBLY,TAIL..... ROTOR SEE FIG.105 FOR NHA		EA			*	REF	REF	REF		106	
			5305-720-8428	MS35266-73	<96906>	.SCREW,MACHINE.....				1	*	*	*		*	106	1
			5310-167-0753	AN960PD10L	<88044>	.WASHER,FLAT.....		HD		1	*	*	*		*	106	
			5305-616-8124	MS35265-38	<96906>	.SCREW,MACHINE.....		EA		3	*	*	*		*	106	2
			5310-187-2398	AN960PD6L	<88044>	.WASHER,FLAT.....		HD		3	*	*	*		*	106	
P	D		1560-570-2367	S1665-61676-1	<78286>	.ROD ASSEMBLY.....									*	106	
AF	F			S1665-61676-2	<78286>	.ROD ASSEMBLY RPLS--..... 1560-565-8510, 1650-307-3685 ATTACHING PARTS		EA		1						106	
X2	F			S1665-61769-2	<78286>	.BOLT.....		EA		1						106	3
X2	F			S1665-61778-3	<78286>	.WASHER.....		EA		2						106	4
X2	F			S1665-61778-4	<78286>	.WASHER.....		EA		1						106	5
			5310-905-8451	MS21083N06	<96906>	.NUT,SELF-LOCKING,HEXAGON.... ---*---		HD		1	*	*	*		*	106	6
P	D		5310-822-4892	S1565-61803	<78286>	..NUT,PLAIN,HEXAGON.....		EA		1	*	*	*		REF	106	7
P	F		3110-690-7297	REP3ML3FS210	<21335>	..BEARING,BALL,ROD END.....		EA		1	*	*	*		REF	106	8
			5305-151-0385	AN500A6-12	<88044>	..SCREW,MACHINE.....		HD		1	*	*	*		*	106	9
			5310-187-2398	AN960PD6L	<88044>	..WASHER,FLAT.....		HD		2	*	*	*		*	106	
			5310-905-8451	MS21083N06	<96906>	..NUT,SELF-LOCKING,HEXAGON...		HD		1	*	*	*		*	106	
P	D		1560-570-4064	S1565-61620-1	<78286>	..BUSHING,ADJUSTING.....		EA		1					REF	106	10
P	D		5340-509-3927	S1565-61619	<78286>	..CONNECTOR ROD,END..... ATTACHING PARTS		EA		1					*	106	11
			5315-957-6696	MS24692-77D	<96906>	..PIN,TAPERED..... ---*---		EA		2					*	106	12
P	F		3110-142-4312	AN200KS3L	<88044>	..BEARING,BALL,AIRFRAME.....		EA		1	*	*	*		REF	106	13
P	D		5340-579-5972	S1665-61678	<78286>	..CONNECTOR,ROD END.....		EA		1					*	106	14
P	F		1650-310-1429	S1665-61589	<78286>	..BELLOWS,PRESSURE.....		EA		1	*	2	2		*	106	
			5330-050-1211	AN622788	<88044>	...PACKING,PREFORMED.....		EA		1	*	*	*		*	106	16
			5330-579-3156	MS28775-116	<96906>	...PACKING,PREFORMED.....		EA		1	*	*	*		*	106	17
X1				S1565-61659	<78286>	...BELLOWS CAP.....		EA		1						106	18
X1				S1665-61847	<78286>	...BELLOWS.....		EA		1						106	
X1				S1665-61592	<78286>	...END CAP.....		EA		1						106	
P	F		1560-589-3801	S1665-61677	<78286>	..ROD ASSEMBLY.....		EA		1	*	*	*		*	106	19
P	H		1650-656-4463	S1665-61770	<78286>	.COVER ASSEMBLY,TAIL ROTOR... SERVO		EA		1	*	2	2		*	106	
			5310-550-5009	MS15795-704	<96906>	..WASHER,FLAT..... ---*---		HD		2	*	*	*		*	106	
P	D		1560-656-9808	S1665-61774-1	<78286>	..LUG ASSEMBLY,TAIL ROTOR.... ATTACHING PARTS		EA		2					*	106	
				MS20470AD4	<96906>	..RIVET,SOLID.....		EA		8						106	23
			5310-550-5009	MS15795-704	<96906>	..WASHER,FLAT..... ---*---		HD		8					*	106	
P	H		9320-224-9351	3083	<75183>	..EDGING-RUBBER.....		EA		1	*	*	*			106	31
P	D		1650-305-4517	S1665-61608	<78286>	..COVER.....		EA		1						106	32
P	F	R	6615-627-8105	S1665-61755	<78286>	.SERVO,MOTOR ASSEMBLY..... ATTACHING PARTS		EA		1	*	*	*		REF	106	33
			5305-145-7011	AN503-8-8	<88044>	.SCREW,MACHINE.....		HD		4	*	*	*		*	106	34
			5310-184-8966	AN960PD8	<88044>	.WASHER,FLAT..... ---*---		HD		4	*	*	*		*	106	
P	D		1560-717-8179	S1565-61882-3	<78286>	..ARM ASSEMBLY.....		EA		4					REF	106	

(1) SOURCE, MAINT AND REC CODE (a) SOURCE CODE	(b) MAINT LEVEL	(c) REC CODE	(2) FEDERAL STOCK NUMBER	REFERENCE NUMBER		(3) DESCRIPTION	MODELS USABLE ON CH-34C	(4) UNIT OF ISSUE	(5) QTY INC IN UNIT PACK	(6) QTY INC IN UNIT	(7) 30-DAY DS GS MAINT ALW (a) 1-20	(b) 21-50	(c) 51-100	(8) 1-YR ALW PER 100 EQUIP CNTGCY	(9) DEPOT MAINT ALW PER 100 EQUIP	(10) ILLUSTRATION (a) FIG NO	(b) ITEM NO
P	D		1560-340-2126	S1665-61615	<78286>	.ADAPTER,SERVO.....		EA		1					*	106	
P	D		1650-572-6999	S1565-61694	<78286>	.GASKET.....		EA		1	*	*	*		*	106	35
		T	1650-321-1760	S1665-61551	<78286>	.SERVO UNIT ASSEMBLY.....		EA			*	*	*			106	
		R	1650-513-4031	S1665-61612	<78286>	.SERVO UNIT ASSEMBLY..... RPL-BY PN S1665-61752-1										106	
X1		T		S1665-61752-1	<78286>	.SERVO UNIT ASSEMBLY..... RPLS-- 1650-321-1760, 1650-513-4031 WHEN EXHTD RQTN NHA 1560-627-8104		EA		1						106	
P	D		1560-717-8180	S1565-61883-3	<78286>	.LINK,SERVO MOTOR.....		EA		8					*	106	
P	H		1560-567-6932	S1665-61533-61	<78286>	..TUBE ASSEMBLY.....		EA		1	*	*	*		*	106	36
			4730-277-6371	AN628904	<88044>	..LOCKNUT,TUBE FITTING.....		EA		2	*	*	*		*	106	37
			5330-805-2966	MS28778-4	<96906>	..PACKING,PREFORMED.....		EA		2	REF	REF	REF	REF	*	106	38
			5330-186-4947	MS28777-4	<96906>	..WASHER,NONMETALLIC.....		LL		2	*	*	*		*	106	39
			4730-725-4351	MS24394D4	<96906>	..ELBOW,FLARED TUBE FITTING..		EA		2	*	*	*		*	106	40
			1650-656-4462	S1665-61776	<78286>	..FORK ASSEMBLY,TAIL ROTOR... SERVO RPL-BY 1560-659-9199										106	
P	F		1560-659-9199	S1665-61777	<78286>	..FORK ASSEMBLY,TAIL ROTOR... SERVO RPLS-- 1650-656-4462 ATTACHING PARTS		EA		1	*	*	*		*	106	
X2	F			S1665-61769-1	<78286>	..BOLT.....		EA		1						106	41
X2	F			S1665-61778-1	<78286>	..WASHER.....		EA		2						106	42
X2	F			S1665-61778-2	<78286>	..WASHER.....		EA		1						106	43
P	F		5310-545-4617	22M50	<72962>	..NUT,STEEL..... ---*---		EA		1	*	*	*		REF	106	44
P	H		3110-542-0146	5632FCHH	<40920>	...BEARING,BALL,ANNULAR.....		EA		2	*	*	*		REF	106	45
P	F		1650-323-4930	S1665-61662	<78286>	..CONNECTING LINK,RIGGING....		EA		2	*	*	*		*	106	
P	F		1560-659-9199	S1665-61777	<78286>	..FORK ASSEMBLY,TAIL ROTOR... SERVO RPLS-- 1650-656-4462 ATTACHING PARTS		EA		1	*	*	*		REF	106	
X2	F			S1665-61769-1	<78286>	..BOLT.....		EA		1						106	48
X2	F			S1665-61778-1	<78286>	..WASHER.....		EA		2						106	49
X2	F			S1665-61778-2	<78286>	..WASHER.....		EA		1						106	50
P	F		5310-545-4617	22M50	<72962>	..NUT,STEEL..... ---*---		EA		1	*	*	*		REF	106	51
P	F		1650-323-4929	S1665-61661	<78286>	...CONNECTING LINK,RIGGER....		EA		1	*	*	*		*	106	
P	F		1650-859-2756	S1665-61590-1	<78286>	...ROD ASSEMBLY,SERVO.....		EA		1	*	*	*		*	106	
				S1665-61776-1	<78286>	...FORK.....		EA		1						106	53
P	F		6615-656-4461	S1665-61772	<78286>	..FOLLOW-UP,ARM ASSEMBLY..... ATTACHING PARTS		EA		1	*	*	*		*	106	
P	F		5305-550-4750	S1565-61797	<78286>	..SCREW,SHOULDER.....		EA		1	*	*	*		REF	106	54
			5306-141-4524	AN173H6A	<88044>	..BOLT,MACHINE.....		HD		1	*	*	*		*	106	55
			5310-183-4406	AN960PD10	<88044>	..WASHER,FLAT.....		HD		2	*	*	*		*	106	
			5310-877-5797	MS21044N3	<96906>	..NUT,SELF-LOCKING,HEXAGON... ---*---		EA		1	*	*	*		*	106	
P	F		1560-580-8399	S1665-61662-1	<78286>	...CONNECTING LINK,RIG.....		EA		1	*	*	*		*	106	
P	D		1560-570-2367	S1665-6167-1	<78286>	..ROD ASSEMBLY.....		EA		1					*	106	
P	D		1560-475-1964	S1565-61796	<78286>	...BUSHING ASSEMBLY.....		EA		1					REF	106	
						...INSERT,LOCKING.....		EA		1						106	57

(1) SOURCE, MAINT AND REC CODE (a) SOURCE CODE	(b) MAINT LEVEL	(c) REC CODE	(2) FEDERAL STOCK NUMBER	REFERENCE NUMBER	(3) DESCRIPTION	MODELS USABLE ON CH-34C	(4) UNIT OF ISSUE	(5) QTY INC IN UNIT PACK	(6) QTY INC IN UNIT	(7) 30-DAY DS GS MAINT ALW (a) 1-20	(b) 21-50	(c) 51-100	(8) 1-YR ALW PER 100 EQUIP CNTGCY	(9) DEPOT MAINT ALW PER 100 EQUIP	(10) ILLUSTRATION (a) FIG NO	(b) ITEM NO
P	D		6615-874-3543	S1565-61796-1	<78286> ....BUSHING.....		EA		1					*	106	58
P	D		3110-142-4277	MS20200K3L	<96906> ...BEARING,BALL,AIRFRAME.....		EA		1					REF	106	59
				S1665-61772-1	<78286> ...ARM-FOLLOW-UP.....		EA		1						106	60
P	H		1560-589-3800	S1665-61675	<78286> ..LUG,TAIL ROTOR.....		EA		1	*	*	*		*	106	
P	H		1650-656-4464	S1665-61775	<78286> ..CLEVIS,SERVO CYLINDER.....		EA		1	*	*	*		*	106	61
			1650-656-4464	HR303	<13020> ADDED PART NO.FOR ABOVE ITEM.		EA			*	*	*			106	61
					ATTACHING PARTS											
			5315-823-8740	MS16562-192	<96906> ..PIN,SPRING.....		HD		2	*	*	*		*	106	62
			5310-183-4406	AN960PD10	<88044> ..WASHER,FLAT.....		HD		2	*	*	*		*	106	63
			5310-877-5797	MS21044N3	<96906> ..NUT,SELF-LOCKING,HEXAGON...		EA		1	*	*	*		*	106	
					---*---											
P	D		1560-653-5888	S1665-61768	<78286> ..PLATE ASSEMBLY,MOUNTING....		EA		1					*	106	
					ATTACHING PARTS											
			5306-182-1900	AN3H13	<88044> ..BOLT,MACHINE.....		HD		2					*	106	64
			5310-183-4406	AN960PD10	<88044> ..WASHER,FLAT.....		HD		4					*	106	
			5310-877-5797	MS21044N3	<96906> ..NUT,SELF-LOCKING,HEXAGON...		EA		2					*	106	
			5306-182-1900	AN3H13	<88044> ..BOLT,MACHINE.....		HD		1					*	106	65
			5310-183-4406	AN960PD10	<88044> ..WASHER,FLAT.....		HD		2					*	106	
			5310-877-5797	MS21044N3	<96906> ..NUT,SELF-LOCKING,HEXAGON...		EA		1					*	106	
					---*---											
			5340-682-1520	MS122118	<96906> ...INSERT,SCREW THREAD.....		EA		7						106	66
P	D		1560-564-5737	S1665-61657	<78286> ...SPACER,SLEEVE.....		EA		1					*	106	67
			5340-282-5322	MS16633-12	<96906> ...RING,RETAINING.....		EA		2					*	106	68
P	F		1650-937-4110	S1665-61768-2	<78286> ...PLATE,MOUNTING.....		EA		1	*	*	*			106	69
P	F		1650-567-6935	S1665-61673	<78286> ...PLATE ASSEMBLY,TAIL ROTOR.		EA		1	*	*	*		*	106	
P	D		5340-664-6165	S1565-61618	<78286> ..CLEVIS,ROD END.....		EA		1					REF	106	70
					ATTACHING PARTS											
			5315-058-9698	MS16562-191	<96906> ..PIN,SPRING.....		HD		1					*	106	71
					---*---											
P	D		1560-886-5981	SS2945	<78286> ..BOOT,TAIL ROTOR SERVO.....		EA		1	REF	REF	REF		REF	106	72
					RPLS-- 1560-673-3945,											
					1650-302-3431,											
					1650-315-6384,&											
					1650-627-2040											
P	H		1650-302-9086	S1665-20023	<78286> ..END CAP,HYDRAULIC SYSTEM...		EA		1	*	*	*		REF	106	73
			5330-350-9013	AN6227B10	<88044> ..PACKING,PREFORMED.....		EA		1					*	106	74
			5330-630-5958	MS28774-112	<96906> ..RETAINER,PACKING.....		EA		1					*	106	75
			5330-171-5047	MS28782-10	<96906> ..RETAINER,PACKING.....		AV		1					*	106	76
			5330-350-9013	AN6627B10	<88044> ..PACKING,PREFORMED.....		EA		1					*	106	77
			5330-350-9013	AN6227B10	<88044> ..PACKING,PREFORMED.....		EA		1					*	106	78
			5330-350-9013	AN6227B10	<88044> ..PACKING,PREFORMED.....		EA		1					*	106	79
			5330-630-5958	MS28774-112	<96906> ..RETAINER,PACKING.....		EA		1					*	106	80
			5330-171-5047	MS28782-10	<96906> ..RETAINER,PACKING.....		AV		1					*	106	81
			5330-171-5047	MS28782-10	<96906> ..RETAINER,PACKING.....		AV		1					*	106	82
P	D		1650-302-9095	S1665-61567	<78286> ..SELECTOR SET,HYDRAULIC.....		EA		1					50	106	
					ASSEMBLY											
X1				S1665-20009-3	<78286> ...SLEEVE.....		EA		1						106	84
X1				S1665-61567-1	<78286> ...VALVE ASSEMBLY,SERVO.....		EA		1						106	85
P	F		5305-570-2978	S1665-61554	<78286> ..SCREW,MACHINE.....		EA		1	*	*	*		*	106	86
			5305-150-9209	AN502-10-14	<88044> ..SCREW,MACHINE.....		HD		4					*	106	87
			5310-183-4406	AN960PD10	<88044> ..WASHER,FLAT.....		HD		4					*	106	
P	D		5310-950-3184	S1665-61605	<78286> ..NUT,PLAIN,ROUND.....		EA		1					*	106	88

(1) SOURCE MAINT AND REC CODE (a) SOURCE CODE	(b) MAINT LEVEL	(c) REC CODE	(2) FEDERAL STOCK NUMBER	(3) DESCRIPTION REFERENCE NUMBER		MODELS USABLE ON CH-34C	(4) UNIT OF ISSUE	(5) QTY INC IN UNIT PACK	(6) QTY INC IN UNIT	(7) 30-DAY DS GS MAINT ALW (a) 1-20	(b) 21-50	(c) 51-100	(8) 1-YR ALW PER 100 EQUIP CNTGCY	(9) DEPOT MAINT ALW PER 100 EQUIP	(10) ILLUSTRATION (a) FIG NO	(b) ITEM NO
			5330-559-6182	MS28775-211	<96906>	..PACKING,PREFORMED.....		EA		1					*	106	89
			5330-582-2116	MS28774-211	<96906>	..RETAINER,PACKING.....		EA		1					*	106	90
			5330-530-4341	MS28932-1	<96906>	..PACKING MATERIAL.....		SP		1					*	106	91
			5330-350-9013	AN6227B10	<88044>	..PACKING,PREFORMED.....		EA		1					*	106	92
			5330-630-5958	MS28774-112	<96906>	..RETAINER,PACKING.....		EA		1					*	106	93
P	D		1650-305-4515	S1665-61606	<78286>	..CAP,TAIL ROTOR RPLS--..... 1650-304-4651		EA		1						106	94
			5330-582-2855	MS28775-113	<96906>	..PACKING,PREFORMED.....		EA		1					*	106	95
			5330-171-6768	MS28782-13	<96906>	..RETAINER,PACKING.....		EA		1					*	106	96
			5330-171-6768	MS28782-13	<96906>	..RETAINER,PACKING.....		EA		1					*	106	97
P	D		5310-950-3184	S1665-61605	<78286>	..NUT,PLAIN,ROUND.....		EA		1					REF	106	98
			5330-559-6182	MS28775-211	<96906>	..PACKING,PREFORMED.....		EA		1					*	106	99
			5330-582-2116	MS28774-211	<96906>	..RETAINER,PACKING.....		EA		1					*	106	100
			5330-530-4341	MS28932-1	<96906>	..PACKING MATERIAL.....		SP		1					*	106	101
			5330-350-9013	AN6227B10	<88044>	..PACKING,PREFORMED.....		EA		1					*	106	102
			5330-630-5958	MS28774-112	<96906>	..RETAINER,PACKING.....		EA		1					*	106	103
P	D		1650-305-4515	S1665-61606	<78286>	..CAP,TAIL ROTOR RPLS--..... 1650-304-4651		EA		1					REF	106	104
			5330-584-1038	MS28775-213	<96906>	..PACKING,PREFORMED.....		EA		1					*	106	105
			5330-582-2146	MS28774-213	<96906>	..RETAINER,PACKING.....		EA		1						106	106
P	D		1650-302-9100	S1665-61593	<78286>	..PISTON ASSEMBLY,SERVO UNIT.		EA		1					*	106	
X1				S1665-61593-2	<78286>	...BUSHING.....		EA		1						106	107
X1				S1665-61593-1	<78286>	...ROD.....		EA		1						106	
X1				S1665-61593-3	<78286>	...PISTON.....		EA		1						106	108
P	D		1650-305-4514	S1665-61603	<78286>	..CYLINDER,TAIL ROTOR SERVO..		EA		1					*	106	109
				S1665-20029	<78286>	..PLATE,IDENTIFICATION.....		EA		1						106	110
P	D		1650-305-4516	S1665-61607	<78286>	..RETAINER,HELICAL..... COMPRESSION SPRING		EA		1					*	106	
X1				S1665-61607-2	<78286>	...RING,SPRING RETAINER.....		EA		1						106	111
X1				S1665-61607-1	<78286>	...RETAINER,SPRING.....		EA		1						106	112
P	D		6615-663-3448	S1665-61577	<78286>	..SPRING,HELICAL,COMPRESSION.		EA		1					50	106	113
			5310-275-0387	NAS509-6	<80205>	..NUT,PLAIN,HEXAGON.....		EA		1					*	106	114
			5310-527-4509	NAS513-6	<80205>	..WASHER,KEY.....		EA		1					*	106	115
			5310-167-1302	AN316-7R	<88044>	..NUT,PLAIN,HEXAGON.....		LL		1					*	106	116
P	D		5306-591-2447	S1640-61718	<78286>	..BOLT,INTERNALLY RELIEVED...		EA		1					*	106	117
P	D		1650-323-4931	S1665-61669	<78286>	..BEARING,BALL,ROD END.....		EA		1					*	106	
P	D		3110-142-4314	AN200KS4	<88044>	...BEARING,BALL,AIRFRAME.....		EA		1					REF	106	118
X1				S1665-61669-1	<78286>	...ROD END.....		EA		1						106	119
P	D		6615-315-0899	S1665-61578	<78286>	..SPRING,HELICAL,COMPRESSION.		EA		1					50	106	120
			5330-227-9483	AN6227B9	<88044>	..PACKING,PREFORMED.....		EA		1					*	106	121
			5330-582-2113	MS28774-111	<96906>	..RING,PACKING-BACKUP.....		EA		1						106	122
			5330-227-9483	AN6227B9	<88044>	..PACKING,PREFORMED.....		EA		1					*	106	123
			5330-582-2113	MS28774-111	<96906>	..RING,PACKING-BACKUP.....		EA		1						106	124
			5330-227-9483	AN6227B9	<88044>	..PACKING,PREFORMED.....		EA		1					*	106	125
			5330-808-0794	MS28778-8	<96906>	..PACKING,PREFORMED.....		EA		1					*	106	126
P	D		1650-566-2451	S1665-61668	<78286>	..SELECTOR SET,HYDRAULIC..... ASSEMBLY		EA		1					*	106	
P	D		1650-566-2428	S1665-61667	<78286>	...VALVE EXTENSION,TAIL ROTOR ATTACHING PARTS		EA		1					*	106	127
			5315-823-8740	MS16562-192	<96906>	...PIN,SPRING.....		HD		1					*	106	128
						---*---											
			5330-584-0266	MS28775-010	<96906>	...PACKING,PREFORMED.....		EA		1					*	106	129

(1) SOURCE, MAINT AND REC CODE (a) SOURCE CODE	(b) MAINT LEVEL	(c) REC CODE	(2) FEDERAL STOCK NUMBER	REFERENCE NUMBER	(3) DESCRIPTION	MODELS USABLE ON CH-34C	(4) UNIT OF ISSUE	(5) QTY INC IN UNIT PACK	(6) QTY INC IN UNIT	(7) 30-DAY DS GS MAINT ALW (a) 1-20	(b) 21-50	(c) 51-100	(8) 1-YR ALW PER 100 EQUIP CNTGCY	(9) DEPOT MAINT ALW PER 100 EQUIP	(10) ILLUSTRATION (a) FIG NO	(b) ITEM NO
X1				S1665-61570	<78286> ...PLUG END,HYDRAULIC SYSTEM.		EA		1						106	130
P	D		1650-305-4522	S1665-61666	<78286> ...SELECTOR SET,HYDRAULIC....		EA		1					*	106	131
X1				S1665-61666-2	<78286> ....SLEEVE.....		EA		1						106	132
			5330-579-8156	MS28775-212	<96906> ..PACKING,PREFORMED.....		EA		1					*	106	133
			5330-543-7088	MS28774-212	<96906> ..RETAINER,PACKING.....		AV		1					*	106	134
			5330-543-7088	MS28774-212	<96906> ..RETAINER,PACKING.....		AV		1					*	106	135
P	D		1650-302-9099	S1665-61584	<78286> ..PISTON,LINEAR ACTUATING....		EA		1					*	106	136
			5330-582-2855	MS18775-113	<96906> ..PACKING,PREFORMED.....		EA		1					*	106	137
			5330-171-6768	MS28782-13	<96906> ..RETAINER,PACKING.....		EA		1					*	106	138
			5330-530-4341	MS28932-1	<96906> ..PACKING MATERIAL.....		SP		AR					*	106	139
P	D		1650-803-6399	S1665-61553-3	<78286> ..HOUSING ASSEMBLY.....		EA		1					*	106	
			4730-277-6352	AN932-1	<88044> ...PLUG,PIPE.....		EA		5					*	106	140
P	D		5340-290-4480	MS21208F1-20	<96906> ...INSERT,SCREW THREAD.....		EA		4					*	106	141
			5340-597-3305	MS122200	<96906> ...INSERT,SCREW THREAD.....		EA		4					*	106	142
			5340-290-4476	MS21208F1-10	<96906> ...INSERT,SCREW THREAD.....		EA		1					*	106	143
X1				S1565-61878-1	<78286> .BUSHING,ADJUSTING.....		EA		25						106	
				S1640-61400	<78286> COLLECTIVE PITCH CONTROLS.... INSTALLATION SEE FIG.86 FOR NHA		EA								107	
			1560-330-6183	S1640-61468-1	<78286> .ROD ASSEMBLY RPL-BY..... 1560-675-5804										107	
P	F		1560-675-5804	S1640-61468-2	<78286> .ROD ASSEMBLY RPLS--..... 1560-330-6183 & 1560-334-6431 ATTACHING PARTS		EA		1	*	*	*		*	107	1
			5306-206-6370	NAS464-4-18	<80205> .BOLT,SHEAR.....		EA		1	*	*	*		*	107	2
			5310-184-9001	AN960PD416L	<88044> .WASHER,FLAT.....		HD		2	*	*	*		*	107	
			5310-176-8108	AN320-4	<88044> .NUT,SLOTTED,HEXAGON.....		HD		1	*	*	*		*	107	
			5315-234-1856	MS24665-155	<96906> .PIN,COTTER.....		HD		1	*	*	*		*	107	
			5306-639-2279	NAS464-4-24	<80205> .BOLT,SHEAR.....		EA		1	*	*	*		*	107	3
			5310-187-2354	AN960PD416	<88044> .WASHER,FLAT.....		HD		2	*	*	*		*	107	
			5310-176-8108	AN320-4	<88044> .NUT,SLOTTED,HEXAGON.....		HD		1	*	*	*		*	107	
			5315-234-1856	MS24665-155	<96906> .PIN,COTTER.....		HD		1	*	*	*		*	107	
					---*---											
			1560-334-6387	S1640-61470-1	<78286> .ROD ASSEMBLY RPL-BY..... 1560-674-5493										107	
P	F		1560-674-5493	S1640-61470-3	<78286> .ROD ASSEMBLY RPLS--..... 1560-334-6387 ATTACHING PARTS		EA		1	*	*	*		*	107	5
			5306-286-1452	NAS464-4-14	<80205> .BOLT,SHEAR.....		EA		1	*	*	*		*	107	6
			5310-141-1795	AN960-416	<88044> .WASHER,FLAT.....		HD		1	*	*	*		*	107	
			5310-176-8108	AN320-4	<88044> .NUT,SLOTTED,HEXAGON.....		HD		1	*	*	*		*	107	
			5315-234-1856	MS24665-155	<96906> .PIN,COTTER.....		HD		1	*	*	*		*	107	
			5306-206-6370	NAS464-4-18	<80205> .BOLT,SHEAR.....		EA		1	*	*	*		*	107	7
			5310-184-9001	AN960PD416L	<88044> .WASHER,FLAT.....		HD		2	*	*	*		*	107	
			5310-176-8108	AN320-4	<88044> .NUT,SLOTTED,HEXAGON.....		HD		1	*	*	*		*	107	

(1) SOURCE, MAINT AND REC CODE (a) SOURCE CODE	(b) MAINT CODE	(c) REC CODE	(2) FEDERAL STOCK NUMBER	REFERENCE NUMBER		(3) DESCRIPTION	MODELS USABLE ON CH-34C	(4) UNIT OF ISSUE	(5) QTY INC IN UNIT PACK	(6) QTY INC IN UNIT	(7) 30-DAY DS/GS MAINT ALW (a) 1-20	(b) 21-50	(c) 51-100	(8) 1-YR ALW PER 100 EQUIP CNTGCY	(9) DEPOT MAINT ALW PER 100 EQUIP	(10) ILLUSTRATION (a) FIG NO	(b) ITEM NO
			5315-234-1856	MS24665-155	<96906>	.PIN,COTTER.....		HD		1	*	*	*		*	107	
						---*---											
				S1640-61456	<78286>	.SHAFT INSTALLATION,TORQUE...				1						107	
P	F		1560-332-3568	S1640-61457	<78286>	..SHAFT ASSEMBLY,COLLECTIVE.. PITCH		EA		1	*	*	*		*	107	9
						ATTACHING PARTS											
			5306-292-8252	AN4H7A	<88044>	..BOLT,MACHINE.....		HD		2	*	*	*		*	107	10
			5310-184-9001	AN960PD416L	<88044>	..WASHER,FLAT.....		HD		4	*	*	*		*	107	
			5310-877-5796	MS21044N4	<96906>	..NUT,SELF-LOCKING,HEXAGON...		EA		2	*	*	*		*	107	
			5306-182-1958	AN4H10A	<88044>	..BOLT,MACHINE.....		HD		2	*	*	*		*	107	11
			5310-187-2354	AN960PD416	<88044>	..WASHER,FLAT.....		HD		4	*	*	*		*	107	
			5310-877-5796	MS21044N4	<96906>	..NUT,SELF-LOCKING,HEXAGON...		EA		2	*	*	*		*	107	
						---*---											
			5310-167-0823	AN960-816	<88044>	...WASHER,FLAT.....		HD		1	*	*	*		*	107	12
			5310-176-8103	AN320D8	<88044>	...NUT,SLOTTED,HEXAGON.....		EA		1	*	*	*		*	107	
			5315-234-1864	MS24665-302	<96906>	...PIN,COTTER.....		HD		1	*	*	*		*	107	
P	F		1560-591-6605	S1640-61460-1	<78286>	...ARM ASSEMBLY.....		EA		1	*	*	*		*	107	14
						ATTACHING PARTS											
			5315-198-8100	AN386-1-15	<88044>	...PIN,TAPERED,THREADED.....		EA		2	*	*	*		*	107	15
			5310-167-0685	AN975-3	<88044>	...WASHER,RECESSED.....		HD		2	*	*	*		*	107	
			5310-285-2177	AN320-3	<88044>	...NUT,SLOTTED,HEXAGON.....		HD		2	*	*	*		*	107	
			5315-234-1856	MS24665-155	<96906>	...PIN,COTTER.....		HD		2	*	*	*		*	107	
						---*---											
P	F		1560-589-4275	S1640-61458	<78286>	...SHAFT ASSEMBLY,FORWARD.... FUSELAGE		EA		1	*	*	*		*	107	16
P	F		1560-591-6604	S1640-61459-1	<78286>	....ARM ASSEMBLY.....		EA		1					*	107	17
						ATTACHING PARTS											
			5315-198-8100	AN386-1-15	<88044>	....PIN,TAPERED,THREADED.....		EA		2					*	107	18
			5310-167-0685	AN975-3	<88044>	....WASHER,RECESSED.....		HD		2					*	107	
			5310-285-2177	AN320-3	<88044>	....NUT,SLOTTED,HEXAGON.....		HD		2					*	107	
			5315-234-1856	MS24665-155	<96906>	....PIN,COTTER.....		HD		2					*	107	
						---*---											
P	F		1560-098-8288	S1640-61465	<78286>	....ADAPTER,FLIGHT CONTROLS..		EA		1	*	*	*		*	107	19
						ATTACHING PARTS											
			5320-582-3506	MS20601AD6W3	<96906>	....RIVET,BLIND.....		EA		4	*	*	*		*	107	20
						---*---											
X1				S1640-61466	<78286>	....TUBE.....		EA		1						107	21
			1560-694-4768	S1640-61461	<78286>	...BRACKET ASSEMBLY RPL-BY.. 1560-591-6606										107	
P	F		1560-591-6606	S1640-61461-1	<78286>	...BRACKET ASSEMBLY RPLS--.. 1560-694-4768		EA		1	*	*	*		*	107	22
P	F		3110-142-4485	AN202KP21B	<88044>	....BEARING,BALL,AIRFRAME....		EA		1	*	*	*		*	107	23
P	F		3110-142-4472	AN201KP8A	<88044>	....BEARING,BALL,AIRFRAME....		EA		1	*	*	*		REF	107	24
X1				S1640-61462	<78286>	....BRACKET.....		EA		1						107	25
				S1640-61401	<78286>	.STICK INSTALLATION.....				1						107	
AF	F			S1640-61413-2	<78286>	..STICK ASSEMBLY,COLLECTIVE.. PITCH RPLS-- 1560-570-0656		EA		1						107	26
						ATTACHING PARTS											
			5306-292-8276	AN173H11A	<88044>	..BOLT,MACHINE.....		EA		1	*	*	*		*	107	27
			5310-183-4406	AN960PD10	<88044>	..WASHER,FLAT.....		HD		2	*	*	*		*	107	
P	F		1560-554-1091	S1640-61455	<78286>	..BUSHING,SLEEVE.....		EA		1	*	*	*		*	107	

(1) SOURCE, MAINT AND REC CODE (a) SOURCE CODE	(b) MAINT LEVEL	(c) REC CODE	(2) FEDERAL STOCK NUMBER	REFERENCE NUMBER		(3) DESCRIPTION	MODELS USABLE ON CH-34C	(4) UNIT OF ISSUE	(5) QTY INC IN UNIT PACK	(6) QTY INC IN UNIT	(7) 30-DAY DS GS MAINT ALW (a) 1-20	(b) 21-50	(c) 51-100	(8) 1-YR ALW PER 100 EQUIP CNTGCY	(9) DEPOT MAINT ALW PER 100 EQUIP	(10) ILLUSTRATION (a) FIG NO	(b) ITEM NO
			5310-877-5797	MS21044N3	<96906>	..NUT,SELF-LOCKING,HEXAGON...		EA		1	*	*	*		*	107	
			5306-182-1963	AN4H15A	<88044>	..BOLT,MACHINE.....		HD		2	*	*	*		*	107	28
			5310-184-9001	AN960PD416L	<88044>	..WASHER,FLAT.....		HD		4	*	*	*		*	107	
			5310-877-5796	MS21044N4	<96906>	..NUT,SELF-LOCKING,HEXAGON...		EA		2	*	*	*		*	107	
			5306-182-2018	AN4H24A	<88044>	..BOLT,MACHINE.....		HD		1	*	*	*		*	107	29
			5310-184-9001	AN960PD416L	<88044>	..WASHER,FLAT.....		HD		2	*	*	*		*	107	
			5310-877-5796	MS21044N4	<96906>	..NUT,SELF-LOCKING,HEXAGON...		EA		1	*	*	*		*	107	
			5306-182-1962	AN4H14A	<88044>	..BOLT,MACHINE.....		HD		2	*	*	*		*	107	30
			5310-187-2354	AN960PD416	<88044>	..WASHER,FLAT.....		HD		2	*	*	*		*	107	
			5310-877-5796	MS21044N4	<96906>	..NUT,SELF-LOCKING,HEXAGON...		EA		2	*	*	*		*	107	
			5306-182-1960	AN4H12A	<88044>	..BOLT,MACHINE.....		HD		2	*	*	*		*	107	31
			5310-187-2354	AN960PD416	<88044>	..WASHER,FLAT.....		HD		2	*	*	*		*	107	
			5310-877-5796	MS21044N4	<96906>	..NUT,SELF-LOCKING,HEXAGON...		EA		2	*	*	*		*	107	
P	F		1560-334-6382	S1640-61403	<78286>	...STICK ASSEMBLY,.....		EA		1	*	2	2		*	107	33
						COLLECTIVE PITCH											
						COPILOTS											
						ATTACHING PARTS											
P	F		5340-696-2678	S1540-61424	<78286>	...RING,RETAINING.....		EA		1	*	*	*		*	107	34
						---*---											
X1				S1640-61414-1	<78286>	....GRIP,HANDLE.....		EA		1						107	35
						ATTACHING PARTS											
MF	F			S1540-61447	<78286>	....PIN,COLLECTIVE PITCH.....		EA		1						107	36
						STICK											
						MAKEFR											
						AR 9510-243-7618 ROD STEEL											
						---*---											
P	F		1560-307-3575	S1540-61439	<78286>	....SLEEVE,FLIGHT CONTROLS...		EA		1	*	*	*		*	107	37
P	F		5340-915-0461	RR125	<80756>	....RING,RETAINING.....		EA		1	*	*	*		*	107	38
P	F		1560-587-2611	S1640-61409-1	<78286>	....STICK ASSEMBLY,.....		EA		1	*	*	*		*	107	39
						COLLECTIVE PITCH											
						ATTACHING PARTS											
			5340-200-2561	RR112	<80756>	....RING,RETAINING.....		EA		1	*	2	2			107	40
						---*---											
X1				S1640-61415	<78286>	.....COUPLING ASSEMBLY,FLIGHT		EA		1						107	41
P	F		1560-672-3532	S1640-61520	<78286>	.....TUBE ASSEMBLY,.....		EA		1	*	*	*		*	107	43
						COLLECTIVE PITCH											
P	F		1560-770-3444	UJ299	<08273>	.....UNIVERSAL JOINT.....		EA		1	*	*	*		*	107	45
P	F		1560-532-1741	S1640-61405-2	<78286>	....TUBE ASSEMBLY,.....		EA		1	*	*	*		*	107	47
						COLLECTIVE PITCH											
X2	F			S1540-61419	<78286>	.....NUT,PLAIN,KNURLED.....		EA		1						107	47A
P	F		1560-551-7067	S1640-61437-3	<78286>	...SHIM		EA		AR	*	2	2		*	107	48
			1560-334-6381	S1640-61402	<78286>	...STICK ASSEMBLY RPL-BY....										107	
						1560-535-5580											
P	F		1560-535-5580	S1640-61402-1	<78286>	...STICK ASSEMBLY RPLS--....		EA		1	*	2	2		*	107	49
						1560-334-6381											
						ATTACHING PARTS											
P	F		5340-696-2678	S1540-61424	<78286>	...RING,RETAINING.....		EA		1	*	*	*		REF	107	50
						---*---											
P	F		1680-855-9244	S1640-61519	<78286>	....PLATE,INSTRUCTION.....		EA		1	*	*	*		*	107	
P	F		1560-098-8287	S1640-61423	<78286>	....DRAG ASSEMBLY,FLIGHT.....		EA		1	*	*	2		*	107	51
						CONTROLS											
						ATTACHING PARTS											

(1) SOURCE, MAINT AND REC CODE (a) SOURCE CODE	(b) MAINT LEVEL	(c) REC CODE	(2) FEDERAL STOCK NUMBER	REFERENCE NUMBER	(3) DESCRIPTION	MODELS USABLE ON CH-34C	(4) UNIT OF ISSUE	(5) QTY INC IN UNIT PACK	(6) QTY INC IN UNIT	(7) 30-DAY DS/GS MAINT ALW (a) 1-20	(b) 21-50	(c) 51-100	(8) 1-YR ALW PER 100 EQUIP CNTGCY	(9) DEPOT MAINT ALW PER 100 EQUIP	(10) ILLUSTRATION (a) FIG NO	(b) ITEM NO
X2	F		5305-638-4093	S1540-61441 <78286>	....SETSCREW.....		EA		2	*	*	*		*	107	52
			5310-167-0818	AN960-10 <88044>	....WASHER,FLAT.....		HD		2	*	*	*		*	107	
P	F		1560-662-5823	S1540-61446 <78286>	....SPACER,SLEEVE.....		EA		2	2	3	7		*	107	53
					---*---											
P	F		5306-989-4101	S1640-61411 <78286>	....MOLDING,METAL.....		EA		2	*	2	2		*	107	54
			5310-167-0818	AN960-10 <88044>	....WASHER,FLAT.....		HD		2	*	*	*		*	107	
P	F		1560-098-8285	S1640-61410 <78286>	....GRIP ASSEMBLY,FLIGHT..... CONTROLS ATTACHING PARTS		EA		1	*	*	*		*	107	55
MF	F			S1540-61447 <78286>	....PIN,COLLECTIVE PITCH..... STICK MAKEFR AR 9510-243-7618 ROD STEEL		EA		1						107	56
					---*---											
MF	F			S14-40-3110 <78286>	.....PIN..... MAKEFR AR 9510-529-8689 STEEL BAR		EA		1						107	57
P	F		1560-307-3575	S1540-61439 <78286>	....SLEEVE,FLIGHT CONTROLS...		EA		1	*	*	*		REF	107	58
			5340-200-2561	RR112 <80756>	....RING,RETAINING.....		EA		1	*	REF	REF			107	59
P	F		1680-347-3431	S1540-61432 <78286>	....FITTING,COLLECTIVE..... PITCH STICK		EA		1	*	*	*		*	107	60
P	F		1560-098-8289	S1640-61480 <78286>	....NUT ASSEMBLY,FLIGHT..... CONTROLS		EA		1	*	*	2		*	107	61
P	F		1560-307-3574	S1540-61433 <78286>	....SLEEVE,FLIGHT CONTROLS...		EA		1	*	*	*		*	107	62
			1560-307-3576	S1540-61440 <78286>	....SPACER,FLIGHT CONTROLS... RPL-BY 1560-874-7389										107	
P	F		1560-874-7389	S1540-61440-1 <78286>	....SLEEVE RPLS--..... 1560-307-3576		EA		1	2	4	9		*	107	63
P	F		1560-587-2611	S1640-61409-1 <78286>	....STICK ASSEMBLY,..... COLLECTIVE PITCH		EA		1	*	*	*		REF	107	64
X1				S1640-61415 <78286>	.....COUPLING ASSEMBLY,FLIGHT		EA		1						107	65
P	F		1560-672-3532	S1640-61520 <78286>	.....TUBE ASSEMBLY,..... COLLECTIVE PITCH		EA		1	*	*	*		REF	107	67
P	F		1560-770-3444	UJ299 <08273>	.....UNIVERSAL JOINT.....		EA		1	*	*	*		REF	107	69
P	F		1560-570-0653	S1640-61405-1 <78286>	....TUBE ASSEMBLY,..... COLLECTIVE PITCH,PILOTS STICK		EA		1	*	*	*		*	107	71
X2	F			S1540-61419 <78286>	.....NUT,PLAIN,KNURLED.....		EA		1						107	71A
P	F		1560-527-0399	S1640-61437-2 <78286>	...SHIM.....		EA		AR	2	5	9		*	107	72
AF	F			S1640-61404-3 <78286>	...SHAFT ASSEMBLY RPLS--.... 1560-334-6383, 1560-586-6764		EA		1						107	73
P	F		1560-334-6389	S1640-61475 <78286>	....PINION ASSEMBLY.....		EA		2	*	2	2		*	107	74
P	F		1560-334-6385	S1640-61407 <78286>	....SUPPORT ASSEMBLY,..... COLLECTIVE PITCH,STICK ATTACHING PARTS		EA		1	*	*	*		*	107	75
			5340-803-7301	NAS51-50 <80205>	....RING,RETAINING.....		EA		1	*	*	*		*	107	76
					---*---											
P	F		3110-275-0110	DSRP8 <21335>	.....BEARING,ROLLER,AIRFRAME.		EA		1	*	*	*		*	107	77
P	F		1560-305-4190	S1640-61430-2 <78286>	....FITTING,FLIGHT CONTROLS.. RPLS-- 1560-586-6765 ATTACHING PARTS		EA		1	*	*	*		*	107	78

(1) SOURCE, MAINT AND REC CODE (a) SOURCE CODE	(b) MAINT LEVEL	(c) REC CODE	(2) FEDERAL STOCK NUMBER	REFERENCE NUMBER		(3) DESCRIPTION	MODELS USABLE ON CH-34C	(4) UNIT OF ISSUE	(5) QTY INC IN UNIT PACK	(6) QTY INC IN UNIT	(7) 30-DAY DS GS MAINT ALW (a) 1-20	(b) 21-50	(c) 51-100	(8) 1-YR ALW PER 100 EQUIP CNTGCY	(9) DEPOT MAINT ALW PER 100 EQUIP	(10) ILLUSTRATION (a) FIG NO	(b) ITEM NO
			5340-715-1152	MS16624-1037	<96906>	....RING,RETAINING.....		EA		1	*	*	*		*	107	79
P	F		1560-587-6296	S1640-61491	<78286>	....RING,COLLECTIVE PITCH....		EA		1	2	2	4		*	107	80
P	F		1560-323-4327	S1640-61490	<78286>	....NUT,FLIGHT CONTROLS.....		EA		1	*	*	*		*	107	81
						---*---											
P	F		1560-334-6390	S1640-61486-2	<78286>	....GEAR,BEVEL RPLS--..... 1560-640-4844		EA		1	*	2	2		*	107	82
P	F		1560-554-1090	S1640-61483	<78286>	....SPACER,SLEEVE.....		EA		1	*	*	2		*	107	83
P	F		1560-551-7067	S1640-61437-3	<78286>	....SHIM.....		EA		1	*	REF	REF		REF	107	84
P	F		1560-334-6384	S1640-61406	<78286>	....SUPPORT ASSEMBLY,..... COLLECTIVE PITCH ATTACHING PARTS		EA		1	*	*	*		*	107	85
			5340-803-7301	NAS51-50	<80205>	....RING,RETAINING.....		EA		1	*	*	*		*	107	86
						---*---											
P	F		1560-551-7059	S1640-61437-4	<78286>	....SHIM.....		EA		2	*	2	2		*	107	87
P	F		1560-307-3680	S1640-61448-2	<78286>	....FITTING,FLIGHT CONTROLS.. ATTACHING PARTS		EA		1	*	*	*		*	107	88
P	F		1560-587-6296	S1640-61491	<78286>	....RING,COLLECTIVE PITCH....		EA		1	REF	REF	REF		REF	107	89
P	F		1560-323-4327	S1640-61490	<78286>	....NUT,FLIGHT CONTROLS.....		EA		1	*	*	*		REF	107	90
						---*---											
			5315-616-5516	MS35756-4	<96906>	....KEY,WOODRUFF.....		EA		1	*	*	*		*	107	91
P	F		1560-527-0399	S1640-61437-2	<78286>	....SHIM.....		EA		2	REF	REF	REF		REF	107	92
P	F		1560-334-6390	S1640-61486-2	<78286>	....GEAR,BEVEL RPLS--..... 1560-640-4844		EA		1	*	REF	REF		REF	107	93
			1560-334-6386	S1640-61438	<78286>	....SHAFT ASSEMBLY RPL-BY... 1560-613-1007										107	
P	F		1560-613-1007	S1640-61438-1	<78286>	....SHAFT ASSEMBLY RPLS--... 1560-334-6386		EA		1	*	*	*		*	107	94
X1				S1640-61488	<78286>	.....SHAFT,FLIGHT CONTROLS...		EA		1						107	95
P	F		1560-770-3444	UJ299	<08273>	.....UNIVERSAL JOINT.....		EA		1	*	*	*		REF	107	97
X1				S1640-61489	<78286>	.....SHAFT,COLLECTIVE PITCH.. ATTACHING PARTS		EA		1						107	99
				MS20427-6	<96906>	.....RIVET.....		EA		1						107	100
						---*---											
P	F		1560-770-3444	UJ299	<08273>	.....UNIVERSAL JOINT.....		EA		1	*	*	*		REF	107	101
P	F		1560-323-4324	S1640-61424-2	<78286>	....SHAFT ASSEMBLY,..... COLLECTIVE PITCH,TORQUE STICK RPLS-- 1560-091-4132		EA		2	*	*	*		*	107	103
				S1640-61427	<78286>	..BRACKET INSTALLATION.....				1						107	
P	F		1560-560-5400	S1640-61453	<78286>	...BRACKET,COLLECTIVE PITCH.. ATTACHING PARTS		EA		1	*	*	*		*	107	104
			5306-182-2060	AN3H7A	<88044>	...BOLT,MACHINE.....		HD		2	*	*	*		*	107	105
			5310-183-4406	AN960PD10	<88044>	...WASHER,FLAT.....		HD		4	*	*	*		*	107	
			5310-877-5797	MS21044N3	<96906>	...NUT,SELF-LOCKING,HEXAGON..		EA		2	*	*	*		*	107	
			5306-182-2059	AN3H6A	<88044>	...BOLT,MACHINE.....		HD		2	*	*	*		*	107	106
			5310-183-4406	AN960PD10	<88044>	...WASHER,FLAT.....		HD		4	*	*	*		*	107	
			5310-877-5797	MS21044N3	<96906>	...NUT,SELF-LOCKING,HEXAGON..		EA		2	*	*	*		*	107	
						---*---											

(1) SOURCE, MAINT AND REC CODE (a) SOURCE CODE	(b) MAINT CODE	(c) REC CODE	(2) FEDERAL STOCK NUMBER	REFERENCE NUMBER	(3) DESCRIPTION	MODELS USABLE ON CH-34C	(4) UNIT OF ISSUE	(5) QTY INC IN UNIT PACK	(6) QTY INC IN UNIT	(7) 30-DAY DS GS MAINT ALW (a) 1-20	(b) 21-50	(c) 51-100	(8) 1-YR ALW PER 100 EQUIP CNTGCY	(9) DEPOT MAINT ALW PER 100 EQUIP	(10) ILLUSTRATION (a) FIG NO	(b) ITEM NO
				S1625-61800	<78286> TAIL WHEEL LOCK CONTROLS..... INSTALLATION SEE FIG.86 FOR NHA		EA								108	
			5315-989-7631	MS20392-2C7	<96906> .PIN,STRAIGHT,HEADED.....		EA		1	*	*	*		*	108	1
			5315-234-1856	MS24665-155	<96906> .PIN,COTTER.....		HD		1	*	*	*		*	108	
			5315-811-1266	MS20392-1C19	<96906> .PIN,STRAIGHT,HEADED.....		EA		2	*	*	*		*	108	2
			5310-550-5009	MS15795-704	<96906> .WASHER,FLAT.....		HD		2	*	*	*		*	108	
			5315-234-1856	MS24665-155	<96906> .PIN,COTTER.....		HD		2	*	*	*		*	108	
			5315-080-1942	MS20392-1C33	<96906> .PIN,STRAIGHT,HEADED.....		EA		1	*	*	*		*	108	3
			5310-550-5009	MS15795-704	<96906> .WASHER,FLAT.....		HD		1	*	*	*		*	108	
			5315-234-1856	MS24665-155	<96906> .PIN,COTTER.....		HD		1	*	*	*		*	108	
			3020-287-7919	MS20219-2	<96906> .PULLEY,GROOVE..... ATTACHING PARTS		EA		1	*	*	REF		*	108	4
			5306-182-1962	AN4H14A	<88044> .BOLT,MACHINE.....		HD		1	*	*	*		*	108	5
			5310-187-2354	AN960PD416	<88044> .WASHER,FLAT.....		HD		2	*	*	*		*	108	
			5310-877-5796	MS21044N4	<96906> .NUT,SELF-LOCKING,HEXAGON.... ---*---		EA		1	*	*	*		*	108	
			5340-632-1251	NAS43-4-192	<80205> .SPACER,SLEEVE.....		EA		1	*	*	*		*	108	6
				S1640-61809	<78286> .BRACKET INSTALLATION.....				1						108	
X2	F			S1640-61810	<78286> ..BRACKET ASSEMBLY..... ATTACHING PARTS		EA		1						108	7
			5306-182-2057	AN3H4A	<88044> ..BOLT,MACHINE.....		HD		2	*	*	*		*	108	8
			5310-183-4406	AN960PD10	<88044> ..WASHER,FLAT.....		HD		4	*	*	*		*	108	
			5310-877-5797	MS21044N3	<96906> ..NUT,SELF-LOCKING,HEXAGON... ---*---		EA		2	*	*	*		*	108	
				S1640-61818	<78286> .FAIRLEAD INSTALLATION.....				1						108	
MF	F			S1640-61819-2	<78286> ..FAIRLEAD..... MAKEFR AR 9330-576-3984 PLASTIC SH		EA		1						108	9
MF	F			S1640-61819-1	<78286> ..FAIRLEAD..... MAKEFR AR 9330-576-3984 PLASTIC SH ATTACHING PARTS		EA		1						108	10
			5305-984-6195	MS35206-247	<96906> ..SCREW,MACHINE.....				2	*	*	*		*	108	11
			5310-184-8966	AN960PD8	<88044> ..WASHER,FLAT.....		HD		2	*	*	*		*	108	
			5310-811-3494	MS21044N08	<96906> ..NUT,SELF-LOCKING,HEXAGON... ---*---		EA		2	*	*	*		*	108	
MF	F			S1640-61824	<78286> .FAIRLEAD..... MAKEFR AR 9330-576-3984 PLASTIC SH ATTACHING PARTS		EA		2						108	12
			5305-984-6194	MS35206-246	<96906> .SCREW,MACHINE.....		HD		2	*	*	*		*	108	13
			5310-184-8966	AN960PD8	<88044> .WASHER,FLAT.....		HD		2	*	*	*		*	108	
			5310-811-3494	MS21044N08	<96906> .NUT,SELF-LOCKING,HEXAGON.... ---*---		EA		2	*	*	*		*	108	
MF	F			S1640-61825	<78286> .CLIP..... MAKEFR AR 9330-576-3984 PLASTIC SH ATTACHING PARTS		EA		1						108	14
			5306-182-2057	AN3H4A	<88044> .BOLT,MACHINE.....		HD		2	*	*	*		*	108	15
			5310-183-4406	AN960PD10	<88044> .WASHER,FLAT..... ---*---		HD		2	*	*	*		*	108	

(1) SOURCE MAINT AND REC CODE (a) SOURCE CODE	(b) MAINT LEVEL	(c) REC CODE	(2) FEDERAL STOCK NUMBER	(3) DESCRIPTION REFERENCE NUMBER			MODELS USABLE ON CH-34C	(4) UNIT OF ISSUE	(5) QTY INC IN UNIT PACK	(6) QTY INC IN UNIT	(7) 30-DAY DS GS MAINT ALW (a) 1-20	(b) 21-50	(c) 51-100	(8) 1-YR ALW PER 100 EQUIP CNTGCY	(9) DEPOT MAINT ALW PER 100 EQUIP	(10) ILLUSTRATION (a) FIG NO	(b) ITEM NO
MF	F			S1640-61826	<78286>	.FAIRLEAD,TAIL WHEEL.....		EA		2						108	16
						MAKEFR											
						AR 9330-576-3984 PLASTIC SH											
						ATTACHING PARTS											
			5306-182-2058	AN3H5A	<88044>	.BOLT,MACHINE.....		EA		2	*	*	*		*	108	17
			5310-183-4406	AN960PD10	<88044>	.WASHER,FLAT.....		HD		2	*	*	*		*	108	
			5310-877-5797	MS21044N3	<96906>	.NUT,SELF-LOCKING,HEXAGON....		EA		2	*	*	*		*	108	
						---*---											
			5315-811-1266	MS20392-1C19	<96906>	.PIN,STRAIGHT,HEADLESS.....		EA		1	*	*	*		*	108	18
			5310-550-5009	MS15795-704	<96906>	.WASHER,FLAT.....		HD		1	*	*	*		*	108	
			5315-234-1856	MS24665-155	<96906>	.PIN,COTTER.....		HD		1	*	*	*		*	108	
			5315-811-1266	MS20392-1C19	<96906>	.PIN,STRAIGHT,HEADED.....		EA		1	*	*	*		*	108	19
			5310-550-5009	MS15795-704	<96906>	.WASHER,FLAT.....		HD		1	*	*	*		*	108	
			5315-234-1856	MS24665-155	<96906>	.PIN,COTTER.....		HD		1	*	*	*		*	108	
			5315-811-1266	MS20392-1C19	<96906>	.PIN,STRAIGHT,HEADED.....		EA		2	*	*	*		*	108	20
			5310-550-5009	MS15795-704	<96906>	.WASHER,FLAT.....		HD		2	*	*	*		*	108	
			5315-234-1856	MS24665-155	<96906>	.PIN,COTTER.....		HD		2	*	*	*		*	108	
			3020-287-7919	MS20219-2	<96906>	.PULLEY,GROOVE.....		EA		1	*	*	REF		*	108	21
						ATTACHING PARTS											
			5306-182-1958	AN4H10A	<88044>	.BOLT,MACHINE.....		HD		1	*	*	*		*	108	22
			5310-187-2354	AN960PD416	<88044>	.WASHER,FLAT.....		HD		2	*	*	*		*	108	
			5310-877-5796	MS21044N4	<96906>	.NUT,SELF-LOCKING,HEXAGON....		EA		1	*	*	*		*	108	
						---*---											
				S1640-61814	<78286>	.BRACKET INSTALLATION.....				1						108	
MF	F			S1640-61815-1	<78286>	..BRACKET.....		EA		1						108	23
						MAKEFR											
						AR 9535-555-1415 AL ALLY SH											
MF	F			S1640-61815-2	<78286>	..BRACKET.....		EA		1						108	24
						MAKEFR											
						AR 9535-554-1414 AL ALLY SH											
						ATTACHING PARTS											
			5306-182-2057	AN3H4A	<88044>	..BOLT,MACHINE.....		HD		4	*	*	*		*	108	25
			5310-183-4406	AN960PD10	<88044>	..WASHER,FLAT.....		HD		8	*	*	*		*	108	
			5310-877-5797	MS21044N3	<96906>	..NUT,SELF-LOCKING,HEXAGON...		EA		4	*	*	*		*	108	
						---*---											
			5315-811-1266	MS20392-1C19	<96906>	.PIN,STRAIGHT,HEADED.....		EA		1	*	*	*		*	108	26
			5310-550-5009	MS15795-704	<96906>	.WASHER,FLAT.....		HD		1	*	*	*		*	108	
			5315-234-1856	MS24665-155	<96906>	.PIN,COTTER.....		HD		1	*	*	*		*	108	
			5315-811-1266	MS20392-1C19	<96906>	.PIN,STRAIGHT,HEADED.....		EA		2	*	*	*		*	108	27
			5310-550-5009	MS15795-704	<96906>	.WASHER,FLAT.....		HD		2	*	*	*		*	108	
			5315-234-1856	MS24665-155	<96906>	.PIN,COTTER.....		HD		2	*	*	*		*	108	
			3020-287-7919	MS20219-2	<96906>	.PULLEY,GROOVE.....		EA		1	*	*	REF		*	108	28
						ATTACHING PARTS											
			5306-182-1958	AN4H10A	<88044>	.BOLT,MACHINE.....		HD		1	*	*	*		*	108	29
			5310-187-2354	AN960PD416	<88044>	.WASHER,FLAT.....		HD		2	*	*	*		*	108	
			5310-877-5796	MS21044N4	<96906>	.NUT,SELF-LOCKING,HEXAGON....		EA		1	*	*	*		*	108	
						---*---											
				S1640-61821	<78286>	.BRACKET INSTALLATION.....				1						108	
MF	F			S1640-61822-1	<78286>	..BRACKET,TAIL WHEEL LOCK....		EA		1						108	30
						MAKEFR											
						AR 9535-167-2280 AL ALLY SH											
MF	F			S1640-61822-2	<78286>	..BRACKET,TAIL WHEEL LOCK....		EA		1						108	31

(1) SOURCE, MAINT AND REC CODE (a) SOURCE CODE	(b) MAINT CODE	(c) REC CODE	(2) FEDERAL STOCK NUMBER	REFERENCE NUMBER	(3) DESCRIPTION	MODELS USABLE ON CH-34C	(4) UNIT OF ISSUE	(5) QTY INC IN UNIT PACK	(6) QTY INC IN UNIT	(7) 30-DAY DS GS MAINT ALW (a) 1-20	(b) 21-50	(c) 51-100	(8) 1-YR ALW PER 100 EQUIP CNTGCY	(9) DEPOT MAINT ALW PER 100 EQUIP	(10) ILLUSTRATION (a) FIG NO	(b) ITEM NO
					CONTINUED										108	31
					CONTROL											
					MAKEFR											
					AR 9535-167-2280 AL ALLY SH											
					ATTACHING PARTS											
			5306-182-2057	AN3H4A <88044>	..BOLT,MACHINE.....		HD		4	*	*	*		*	108	32
			5310-183-4406	AN960PD10 <88044>	..WASHER,FLAT.....		HD		8	*	*	*		*	108	
			5310-877-5796	MS21044N4 <96906>	..NUT,SELF-LOCKING,HEXAGON...		EA		4	*	*	*		*	108	
					---*---											
P	F		4010-631-3816	NAS302-27-3380 <80205>	.WIRE ROPE ASSEMBLY,SINGLE...		EA		1	*	*	*		*	108	33
					LEG											
P	F		4030-273-3087	MS20667-2 <96906>	..TERMINAL,WIRE ROPE,SWAGING.		EA		1	*	*	*		*	108	34
				S1625-61801 <78286>	.HANDLE AND BELLCRANK.....				1						108	
					INSTALLATION											
			5315-951-2395	MS20392-2C13 <96906>	..PIN,STRAIGHT,HEADED.....		EA		1	*	*	*		*	108	37
			5310-167-0818	AN960-10 <88044>	..WASHER,FLAT.....		HD		1	*	*	*		*	108	
			5315-234-1856	MS24665-155 <96906>	..PIN,COTTER.....		HD		1	*	*	*		*	108	
P	F		1560-587-2612	S1625-61807 <78286>	..BELLCRANK ASSEMBLY.....		EA		1	*	*	*		*	108	38
					ATTACHING PARTS											
			5306-151-2301	AN23-22 <88044>	..BOLT,CLEVIS.....		EA		1	*	*	*		*	108	39
			5310-183-4406	AN960PD10 <88044>	..WASHER,FLAT.....		HD		2	*	*	*		*	108	
			5310-285-2177	AN320-3 <88044>	..NUT,SLOTTED,HEXAGON.....		HD		1	*	*	*		*	108	
			5315-234-1856	MS24665-155 <96906>	..PIN,COTTER.....		HD		1	*	*	*		*	108	
					---*---											
X1				S1640-61806-1 <78286>	...WELD ASSEMBLY.....		EA		1						108	40
			5310-596-8422	AN316-5R <88044>	..NUT,PLAIN,HEXAGON.....		HD		1	*	*	*		*	108	43
P	F		1560-591-0534	S1625-61802 <78286>	..FORK,TAIL WHEEL,LOCK.....		EA		1	*	*	*		*	108	44
					CONTROL											
X2	F		1560-554-6531	S1625-61806 <78286>	..RETAINER.....		EA		1	*	*	*		*	108	45
P	F		1560-591-0535	S1625-61805 <78286>	..SPRING,TAIL WHEEL,LOCK.....		EA		1	*	*	2		*	108	46
					CONTROL											
P	F		1560-701-9198	S1625-61811 <78286>	..SPACER,SLEEVE RPLS--.....		EA		1	*	*	*		*	108	47
					1560-701-9199,											
					1560-701-9200											
X2	F		1560-554-6531	S1625-61806 <78286>	..RETAINER.....		EA		1	*	*	*		REF	108	48
P	F		1560-697-0482	S10-25-1205 <78286>	..CONTROL ASSEMBLY,LANDING...		EA		1	*	*	*		*	108	49
					GEAR											
			5306-151-0526	AN24-24 <88044>	..BOLT,CLEVIS.....		EA		1	*	*	*		*	108	50
			5310-187-2354	AN960PD416 <88044>	..WASHER,FLAT.....		HD		2	*	*	*		*	108	
			5310-543-4443	MS20364-428A <96906>	..NUT,SELF-LOCKING,HEXAGON...		HD		1	*	*	*		*	108	
			1560-701-9199	S1640-61802 <78286>	..SPACER,TAIL WHEEL LOCK.....										108	
					RPL-BY 1560-701-9198											
P	F		1560-701-9198	S1625-61811 <78286>	..SPACER,SLEEVE RPLS--.....		EA		1	*	*	*		*	108	51
					1560-701-9199&											
					1560-701-9200											
P	F		1560-570-0665	S1640-61816 <78286>	..SWIVEL,TAIL WHEEL LOCK.....		EA		1	*	*	*		*	108	52
					CONTROL HANDLE											

(1) SOURCE, MAINT AND REC CODE (a) SOURCE CODE	(b) MAINT LEVEL	(c) REC CODE	(2) FEDERAL STOCK NUMBER	REFERENCE NUMBER		(3) DESCRIPTION	MODELS USABLE ON CH-34C	(4) UNIT OF ISSUE	(5) QTY INC IN UNIT PACK	(6) QTY INC IN UNIT	(7) 30-DAY DS GS MAINT ALW (a) 1-20	(b) 21-50	(c) 51-100	(8) 1-YR ALW PER 100 EQUIP CNTGCY	(9) DEPOT MAINT ALW PER 100 EQUIP	(10) ILLUSTRATION (a) FIG NO	(b) ITEM NO
				S1645-61020-6	<78286>	FORWARD FLIGHT AND ENGINE.... INSTRUMENT INSTALLATION SEE FIG.40 FOR NHA		EA								109	
				S1645-65130	<78286>	.THERMOMETER INSTALLATION,... FREE AIR				1						109	
				S1645-65140	<78286>	.TUBE INSTALLATION,PITOT.....				1						109	
			5935-627-0364	5009	<78710>	..THERMOMETER,..... SELF-INDICATING, BIMETALLIC RPL-BY 6685-557-5316										109	
			6685-263-1767	94-27328CTYPEC13B	<80049>	..THERMOMETER,..... SELF-INDICATING, BIMETALLIC RPL-BY 6685-557-5316										109	
			6685-263-1770	96450	<65092>	..THERMOMETER,..... SELF-INDICATING, BIMETALLIC RPL-BY 6685-557-5316										109	
			6685-526-8573	A261B	<76883>	..THERMOMETER,..... SELF-INDICATING, BIMETALLIC RPL-BY 6685-557-5316										109	
			6685-526-8574	2716	<53655>	..THERMOMETER,..... SELF-INDICATING, BIMETALLIC RPL-BY 6685-557-5316										109	
			6685-527-9322	1592C3	<51240>	..THERMOMETER,..... SELF-INDICATING, BIMETALLIC RPL-BY 6685-557-5316										109	
			6685-557-0832	C13B	<75238>	..THERMOMETER,..... SELF-INDICATING, BIMETALLIC RPL-BY 6685-557-5316										109	
			6685-564-8454	50-320116-4	<70898>	..THERMOMETER,..... SELF-INDICATING, BIMETALLIC RPL-BY 6685-557-5316										109	
			6685-663-5237	B9310SNR	<51240>	..THERMOMETER,..... SELF-INDICATING, BIMETALLIC RPL-BY 6685-557-5316										109	
P	O		6685-557-5316	MS28028-1	<96906>	..THERMOMETER,..... SELF-INDICATING, BIMETALLIC RPLS-- 5935-627-0364, 6685-263-1767, 6685-263-1770, 6685-526-8573, 6685-526-8574, 6685-527-9322, 6685-557-0832,		EA		1	*	*	2	10	*	109	1

(1) SOURCE, MAINT AND REC CODE (a) SOURCE CODE	(b) MAINT LEVEL	(c) REC CODE	(2) FEDERAL STOCK NUMBER	REFERENCE NUMBER	(3) DESCRIPTION	MODELS USABLE ON CH-34C	(4) UNIT OF ISSUE	(5) QTY INC IN UNIT PACK	(6) QTY INC IN UNIT	(7) 30-DAY DS GS MAINT ALW (a) 1-20	(b) 21-50	(c) 51-100	(8) 1-YR ALW PER 100 EQUIP CNTGCY	(9) DEPOT MAINT ALW PER 100 EQUIP	(10) ILLUSTRATION (a) FIG NO	(b) ITEM NO
					CONTINUED										109	1
					6685-564-8454,&											
					6685-663-5237											
P	O		6610-526-7849	AN5813-1 <88044>	..PITOT TUBE RPLS--.....		EA		1	*	*	2	10	*	109	2
					6610-526-7851											
					ATTACHING PARTS											
MF	O			S1655-65124 <78286>	..LEAD ASSEMBLY,ELECTRIC.....		EA		1						109	4
					MAKEFR											
					1 EA 5940-503-9995 TERML											
					1 EA 5940-557-1629 TERML											
					AR 6145-578-6602 WIRE											
P	F		4720-622-1594	AN6270-4-20 <88044>	..HOSE ASSEMBLY,RUBBER.....		EA		1	*	*	*		*	109	5
				S1645-65156 <78286>	.COMPASS INSTALLATION,STANDBY				1						109	
			6605-221-1352	814B <89944>	..COMPASS,MAGNETIC,MOUNTED...										109	
					RPL-BY 6605-551-8187											
			6605-239-8209	C2300 <70214>	..COMPASS,MAGNETIC,MOUNTED...										109	
					RPL-BY 6605-551-8187											
			6605-239-8210	27471 <81349>	..COMPASS,MAGNETIC,MOUNTED...										109	
					RPL-BY 6605-551-8187											
			6605-348-5744	1828-2A <19315>	..COMPASS,MAGNETIC,MOUNTED...										109	
					RPL-BY 6605-551-8187											
			6605-514-3851	1630U4-04 <89944>	..COMPASS,MAGNETIC,MOUNTED...										109	
					RPL-BY 6605-551-8187											
			6605-526-7251	C2A <56232>	..COMPASS,MAGNETIC,MOUNTED...										109	
					RPL-BY 6605-551-8187											
			6605-526-7252	1630X4-03 <89944>	..COMPASS,MAGNETIC,MOUNTED...										109	
					RPL-BY 6605-551-8187											
			6605-526-7253	1630U4-03 <89944>	..COMPASS,MAGNETIC,MOUNTED...										109	
					RPL-BY 6605-551-8187											
			6605-557-0327	AN5766-4 <88044>	..COMPASS,MAGNETIC,MOUNTED...										109	
					RPL-BY 6605-551-8187											
			6605-557-0333	AN5766-3 <88044>	..COMPASS,MAGNETIC,MOUNTED...										109	
					RPL-BY 6605-551-8187											
			6605-557-5673	CB2100-2 <70214>	..COMPASS,MAGNETIC,MOUNTED...										109	
					RPL-BY 6605-551-8187											
			6605-663-5619	CB2100M <70214>	..COMPASS,MAGNETIC,MOUNTED...										109	
					RPL-BY 6605-551-8187											
			6605-663-8523	1821-2A <19315>	..COMPASS,MAGNETIC,MOUNTED...										109	
					RPL-BY 6605-551-8187											
			6605-663-8526	CB2100 <70214>	..COMPASS,MAGNETIC,MOUNTED...										109	
					RPL-BY 6605-551-8187											
			6605-674-7127	1980U4-02 <89944>	..COMPASS,MAGNETIC,MOUNTED...										109	
					RPL-BY 6605-551-8187											
			6605-857-9978	C2C <92377>	..COMPASS,MAGNETIC,MOUNTED...										109	
					RPL-BY 6605-551-8187											
P	O		6605-551-8187	MS17983-2 <96906>	..COMPASS,MAGNETIC,MOUNTED,..		EA		1	*	2	2	14	*	109	6
					RPLS-- 6605-221-1352,											
					6605-239-8209,											
					6605-239-8210,											
					6605-348-5744,											
					6605-514-3851,											
					6605-526-7251,											

(1) SOURCE, MAINT AND REC CODE (a) SOURCE CODE	(b) MAINT LEVEL	(c) REC CODE	(2) FEDERAL STOCK NUMBER	REFERENCE NUMBER	(3) DESCRIPTION	MODELS USABLE ON CH-34C	(4) UNIT OF ISSUE	(5) QTY INC IN UNIT PACK	(6) QTY INC IN UNIT	(7) 30-DAY DS GS MAINT ALW (a) 1-20	(b) 21-50	(c) 51-100	(8) 1 YR ALW PER 100 EQUIP CNTGCY	(9) DEPOT MAINT ALW PER 100 EQUIP	(10) ILLUSTRATION (a) FIG NO	(b) ITEM NO
					CONTINUED										109	6
					6605-526-7252,											
					6605-526-7253,											
					6605-557-0327,											
					6605-557-0333,											
					6605-557-5673,											
					6605-663-5619,											
					6605-663-8523,											
					6605-663-8526,											
					6605-674-7127,&											
					6605-857-9978											
			5305-834-5980	AN526DD632R10 <88044>	..SCREW,MACHINE.....		EA		4	*	*	*		*	109	7
			5310-208-3467	NAS481-13 <80205>	..NUT,SHEET SPRING.....		EA		4	*	*	*		*	109	
					---*---											
P	F		5340-338-0890	K130-9 <51116>	..SHOCK MOUNT.....NOTE 1		EA		1	*	*	*		*	109	9
					-ALTERNATE-											
				K130-7 <51116>	..MOUNT,RESILIENT.....		EA		1						109	
					ATTACHING PARTS											
			5305-855-6303	AN526DD632R6 <88044>	..SCREW,MACHINE.....		EA		4	*	*	*		*	109	10
					---*---											
P	O		6605-584-4227	AN5823-1 <88044>	..FORM,PRINTED.....		EA		1	2	3	6		*	109	11
P	O		9905-634-1473	AN5800-1 <88044>	..HOLDER ASSEMBLY,CARD.....		EA		1	*	*	*		*	109	12
					ATTACHING PARTS											
			5305-052-5967	AN505DD4-4 <88044>	..SCREW,MACHINE.....		EA		2	*	*	*			109	13
			5310-857-5548	MS21044D04 <96906>	..NUT,SELF-LOCKING,HEXAGON...		EA		2	*	*	*		*	109	
					---*---											
P	F		1560-348-5652	S14-45-2037-1 <78286>	..BOX,STANDBY COMPASS.....		EA		1	*	*	*		*	109	14
					ATTACHING PARTS											
			5305-576-7810	AN525D10R10 <88044>	..SCREW,MACHINE.....		EA		4	*	*	*		*	109	15
			5310-877-5798	MS21044D3 <96906>	..NUT,SELF-LOCKING,HEXAGON...		EA		4	*	*	*		*	109	
					---*---											
			5325-174-5314	MS35489-5 <96906>	..GROMMET,RUBBER.....		EA		4	*	*	*		*	109	16
AF	F			S1645-65151 <78286>	..BRACKET ASSEMBLY USBL.....		EA		1						109	17
					EFF 53-4475 THRU 53-4536											
AF	F			S1645-65155 <78286>	..BRACKET ASSEMBLY USBL.....		EA		1						109	
					EFF 53-4537 THRU 55-4505											
AF	F			S1645-65158 <78286>	..BRACKET ASSEMBLY.....CODE A		EA		1						109	
					ATTACHING PARTS											
			5306-559-8134	AN3DDH5A <88044>	..BOLT,MACHINE.....		EA		2	*	*	*		*	109	18
			5310-183-4406	AN960PD10 <88044>	..WASHER,FLAT.....		HD		2	*	*	*		*	109	
			5306-281-8936	AN3DDH4A <88044>	..BOLT,MACHINE.....		EA		2	*	*	*		*	109	19
AF	F			S1645-65152 <78286>	..BRACKET ASSEMBLY USBL.....		EA		1						109	21
					EFF 53-4475 THRU 55-4505											
AF	F			S1645-65157 <78286>	..BRACKET ASSEMBLY.....CODE A		EA		1						109	
P	F		1560-932-5121	S1645-65152-2 <78286>	...CLIP.....		EA		1	*	*	*			109	22
					ATTACHING PARTS											
				MS20470AD4 <96906>	...RIVET,UNIVERSAL HEAD.....		EA		2						109	23
					---*---											
P	F		1560-932-5122	S1645-65152-3 <78286>	...CLIP.....		EA		1	*	*	*			109	24
					ATTACHING PARTS											
				MS20470AD4 <96906>	...RIVET,UNIVERSAL HEAD.....		EA		2						109	25
					---*---											

(1) SOURCE, MAINT AND REC CODE (a) SOURCE CODE	(b) MAINT CODE	(c) REC CODE	(2) FEDERAL STOCK NUMBER	REFERENCE NUMBER	(3) DESCRIPTION	MODELS USABLE ON CH-34C	(4) UNIT OF ISSUE	(5) QTY INC IN UNIT PACK	(6) QTY INC IN UNIT	(7) 30-DAY DS GS MAINT ALW (a) 1-20	(b) 21-50	(c) 51-100	(8) 1-YR ALW PER 100 EQUIP CNTGCY	(9) DEPOT MAINT ALW PER 100 EQUIP	(10) ILLUSTRATION (a) FIG NO	(b) ITEM NO
				MS20470AD4 <96906>	...RIVET,UNIVERSAL HEAD.....		EA		1						109	26
X2	F		1560-901-1827	S1645-65157-1 <78286>	...BRACKET.....CODE A		EA		1	*	*	*		*	109	27
				S1645-65406 <78286>	.GYRO AND AMPLIFIER..... INSTALLATION				1						109	
			6615-663-8696	673447 <56232>	..CONTROL,DIRECTIONAL,..... AUTOMATIC PILOT RPL-BY 6615-531-2501										109	
P	F		6615-531-2501	617908 <56232>	..CONTROL,DIRECTIONAL,..... AUTOMATIC PILOT RPLS-- 6615-663-8696 ATTACHING PARTS		EA		1	*	*	*		*	109	28
			5306-182-1859	AN4CH6A <88044>	..BOLT,MACHINE.....		EA		1	*	*	*		REF	109	29
			5310-187-2354	AN960PD416 <88044>	..WASHER,FLAT..... ---*---		HD		3	*	*	*		*	109	
				S1645-65024 <78286>	.CONTROLLER INSTALLATION.....				1						109	
P	O	R	6605-698-5854	<81349>	..AMPLIFIER,ELECTRONIC..... CONTROL,MIL-A-6589, TYPE A2 INTRCH		EA		1	*	*	*		*	109	30
P	O	R	6605-487-4769	653278 <56232>	..AMPLIFIER,ELECTRONIC..... CONTROL INTRCH 5990-698-5854		EA		1	*	*	*			109	
P	O	R	6605-487-4774	659597 <56232>	..AMPLIFIER,ELECTRONIC..... CONTROL INTRCH 5990-698-5854		EA		1						109	
				S1645-61500 <78286>	.FLIGHT AND ENGINE..... INSTRUMENT PIPING INSTALLATION USBL EFF 53-4475 THRU 54-2999 SEE FIG.110 FOR BREAKDOWN				1						109	33
				S1645-61102 <78286>	.FLIGHT AND ENGINE..... INSTRUMENT PIPING INSTALLATION USBL EFF 54-300 & SUBSEQUENT SEE FIG.111 FOR BREAKDOWN				1						109	
				S1645-65020 <78286>	.FLIGHT AND ENGINE..... INSTRUMENT PANEL INSTALLATION SEE FIG.112 FOR BREAKDOWN NOTE 1 U/W PN S1645-65151 & S1645-65155 ONLY CODE A USBL EFF 55-4486 & SUBSEQUENT				1						109	34
				S1645-61500 <78286>	FLIGHT AND ENGINE..... INSTRUMENT PIPING		EA								110	

(1) SOURCE, MAINT AND REC CODE (a) SOURCE CODE	(b) MAINT LEVEL	(c) REC CODE	(2) FEDERAL STOCK NUMBER	REFERENCE NUMBER		(3) DESCRIPTION	MODELS USABLE ON CH-34C	(4) UNIT OF ISSUE	(5) QTY INC IN UNIT PACK	(6) QTY INC IN UNIT	(7) 30-DAY DS GS MAINT ALW (a) 1-20	(b) 21-50	(c) 51-100	(8) 1-YR ALW PER 100 EQUIP CNTGCY	(9) DEPOT MAINT ALW PER 100 EQUIP	(10) ILLUSTRATION (a) FIG NO	(b) ITEM NO
						CONTINUED										110	
						INSTALLATION USBL EFF											
						53-4475 THRU 54-2999 SEE											
						FIG.109 FOR NHA											
AF	O			S1645-61100-15	<78286>	.TUBE ASSEMBLY.....		EA		1						110	1
			4730-287-0289	AN818-4D	<88044>	..NUT,TUBE,COUPLING.....		EA		2	*	*	*		*	110	2
			4730-969-0605	MS20819-4C	<96906>	..SLEEVE,FLARED TUBE FITTING.		EA		2	*	*	*		*	110	3
MF	F			S1645-61100-14	<78286>	.TUBE ASSEMBLY.....NOTE 1		EA		1						110	5
			4730-287-0289	AN818-4D	<88044>	..NUT,TUBE,COUPLING.....		EA		2	*	*	*		*	110	6
			4730-302-8641	MS20819-4D	<96906>	..SLEEVE,FLARED TUBE FITTING.		EA		2	*	*	*		*	110	7
			1560-701-5726	S1645-61100-13	<78286>	.TUBE ASSEMBLY.....		EA		1	*	*	*			110	9
MF	F			S1645-61501-2	<78286>	.TUBE ASSEMBLY.....NOTE 1		EA		1						110	
			4730-203-2658	AN818-4C	<88044>	..NUT,TUBE,COUPLING.....		EA		2	*	*	*		*	110	10
			4730-969-0605	MS20819-4C	<96906>	..SLEEVE,FLARED TUBE FITTING.		EA		2	*	*	*		*	110	11
P	F		4730-541-8459	150S1-4	<00624>	.COUPLING,HALF.....		EA		1	*	*	*		*	110	13
P	O		4730-541-8997	015501S5-4D	<00624>	.COUPLING,HALF,SELF-SEALING..		EA		1	REF	REF	REF	REF	REF	110	
AF	O			S1645-61100-20	<78286>	.TUBE ASSEMBLY.....		EA		1						110	14
			4730-287-0289	AN818-4D	<88044>	..NUT,TUBE,COUPLING.....		EA		2	*	*	*		*	110	15
			4730-969-0605	MS20819-4C	<96906>	..SLEEVE,FLARED TUBE FITTING.		EA		2	*	*	*		*	110	16
				S1645-61100-44	<78286>	..TUBE.....		EA		1						110	17
AF	O			S1645-61100-5	<78286>	.TUBE ASSEMBLY.....		EA		1						110	18
			4730-287-0289	AN818-4D	<88044>	..NUT,TUBE,COUPLING.....		EA		2	*	*	*		*	110	19
			4730-969-0605	MS20819-4C	<96906>	..SLEEVE,FLARED TUBE FITTING.		EA		2	*	*	*		*	110	20
MO	O			S1645-61100-4	<78286>	.TUBE ASSEMBLY.....NOTE 1		EA		1						110	22
MO	O			S1645-61501-5	<78286>	.TUBE ASSEMBLY.....		EA		1						110	
						MAKEFR											
						AR 4710-202-9731 TUBE											
						2 EA 4730-278-0678 SLEEVE											
						2 EA 4730-336-7845 NUT											
			4730-334-7845	AN818-4	<88044>	..NUT,TUBE,COUPLING.....		EA		2	*	*	*		*	110	23
			4730-278-0678	MS20819-4	<96906>	..SLEEVE,FLARED TUBE.....		EA		2	*	*	*		*	110	24
MF	O			S1645-61500-1	<78286>	.TUBE ASSEMBLY.....NOTE 1		EA		1						110	26
			4730-287-0289	AN818-4D	<88044>	..NUT,TUBE,COUPLING.....		EA		2	*	*	*		*	110	27
			4730-969-0605	MS20819-4C	<96906>	..SLEEVE,FLARED TUBE FITTING.		EA		2	*	*	*		*	110	28
MF	F			S1645-61100-27	<78286>	..TUBE.....		EA		1						110	29
						MAKEFR											
						AR 4770-278-6398 TUBE											
						2 EA 4730-302-8691 SLEEVE											
						2 EA 4730-289-0289 NUT											
MF	O			S1645-61500-2	<78286>	.TUBE ASSEMBLY,FLIGHT AND....		EA		1						110	30
						ENGINE NOTE 1											
			4730-287-0289	AN818-4D	<88044>	..NUT,TUBE,COUPLING.....		EA		2	*	*	*		*	110	31
			4730-969-0605	MS20819-4C	<96906>	..SLEEVE,FLARED TUBE FITTING.		EA		2	*	*	*		*	110	32
MF	F			S1645-61500-9	<78286>	..TUBE.....		EA		1						110	33
						MAKEFR											
						AR 4710-279-0958 TUBE											
AF	O			S1645-61500-2	<78286>	.TUBE ASSEMBLY,FLIGHT AND....		EA		1						110	34
						ENGINE NOTE 1											
			4730-287-0289	AN818-4D	<88044>	..NUT,TUBE,COUPLING.....		EA		2	*	*	*		*	110	35
			4730-969-0605	MS20819-4C	<96906>	..SLEEVE,FLARED TUBE FITTING.		EA		2	*	*	*		*	110	36
			1560-701-7528	S1645-61500-9	<78286>	..TUBE.....		EA		1	*	*	*			110	37
MF	O			S1645-61500-3	<78286>	.TUBE ASSEMBLY,INSTRUMENT....		EA		1						110	38

(1) SOURCE, MAINT AND REC CODE (a) SOURCE CODE	(b) MAINT LEVEL	(c) REC CODE	(2) FEDERAL STOCK NUMBER	REFERENCE NUMBER		(3) DESCRIPTION	MODELS USABLE ON CH-34C	(4) UNIT OF ISSUE	(5) QTY INC IN UNIT PACK	(6) QTY INC IN UNIT	(7) 30-DAY DS GS MAINT ALW (a) 1-20	(b) 21-50	(c) 51-100	(8) 1-YR ALW PER 100 EQUIP CNTGCY	(9) DEPOT MAINT ALW PER 100 EQUIP	(10) ILLUSTRATION (a) FIG NO	(b) ITEM NO
						CONTINUED										110	38
						MAKEFR											
						AR 4710-278-6393 TUBE											
						2 EA 4730-287-0289 NUT											
						2 EA 4730-302-8641 SLEEVE											
			4730-287-0289	AN818-4D	<88044>	..NUT,TUBE,COUPLING.....		EA		2	*	*	*		*	110	39
			4730-969-0605	MS20819-4C	<96906>	..SLEEVE,FLARED TUBE FITTING.		EA		2	*	*	*		*	110	40
			1560-701-5735	S1645-61500-10	<78286>	..TUBE.....		EA		1	*	*	*			110	41
MF	O			S1645-61200-5	<78286>	.TUBE ASSEMBLY,STATIC..NOTE 1		EA		1						110	42
			4730-287-0289	AN818-4D	<88044>	..NUT,TUBE,COUPLING.....		EA		2	*	*	*		*	110	43
			4730-969-0605	MS20819-4C	<96906>	..SLEEVE,FLARED TUBE FITTING.		EA		2	*	*	*		*	110	44
AF	O			S1645-61200-3	<78286>	.TUBE ASSEMBLY,STATIC.....		EA		1						110	46
			4730-287-0289	AN818-4D	<88044>	..NUT,TUBE,COUPLING.....		EA		2	*	*	*		*	110	47
			4730-969-0605	MS20819-4C	<96906>	..SLEEVE,FLARED TUBE FITTING.		EA		2	*	*	*		*	110	48
			4730-722-1207	MS24402D4	<96906>	.TEE,TUBE.....		EA		1	*	*	*		*	110	50
MF	O			S1645-61200-11	<78286>	.TUBE ASSEMBLY,STATIC DRAIN.. NOTE 1		EA		1						110	51
			4730-287-0289	AN818-4D	<88044>	..NUT,TUBE,COUPLING.....		EA		2	*	*	*		*	110	52
			4730-969-0605	MS20819-4C	<96906>	..SLEEVE,FLARED TUBE FITTING.		EA		2	*	*	*		*	110	53
			4730-828-1395	MS24399D10	<96906>	.REDUCER,TUBE.....		EA		1	*	*	*		*	110	55
MF	O			S1645-65061-1	<78286>	.TUBE ASSEMBLY.....		EA		1						110	56
						MAKEFR											
						AR 4710-279-0950 TUBE											
						2 EA 4730-277-5373 SLEEVE											
						2 EA 4730-287-0288 NUT											
			4730-287-0288	AN818-8D	<88044>	..NUT,TUBE,COUPLING.....		EA		2	*	*	*		*	110	57
			4730-277-5373	MS20819-8D	<96906>	..SLEEVE,FLARED TUBE FITTING.		EA		2	*	*	*		*	110	58
P	F		1560-691-4465	S1645-65061-2	<78286>	..TUBE.....		EA		1	*	*	*			110	59
			4730-684-6915	MS24392D8	<96906>	.NIPPLE,TUBE.....		EA		1	*	*	REF	REF	*	110	60
			4730-541-8296	AN929A8	<88044>	.CAP,TUBE.....		EA		1	*	*	*		*	110	61
P	F		1560-590-7769	SS4015-4-19	<78286>	.RESTRICTOR ASSEMBLY.....		EA		1	*	*	*		*	110	62
						-ALTERNATE-											
			4730-841-5508	SS4016-1-19	<78286>	.RESTRICTOR ASSEMBLY.....		EA		1	*	*	*			110	
AF	O			S1645-61100-12	<78286>	.TUBE ASSEMBLY.....		EA		1						110	63
			4730-287-0289	AN818-4D	<88044>	..NUT,TUBE,COUPLING.....		EA		2	*	*	*		*	110	64
			4730-969-0605	MS20819-4C	<96906>	..SLEEVE,FLARED TUBE FITTING.		EA		2	*	*	*		*	110	65
MF	O			4720EG003-4C0200	<81996>	.HOSE ASSEMBLY,..... TETRAFLUOROETHYLENE		EA		1						110	66A
						MAKEFR											
						AR 4720-857-1732 HOSE											
						2 EA 4730-952-5532 NIPPLE											
						2 EA 4730-967-9513 SOCKET											
						2 EA 4730-967-9521 SLEEVE											
						2 EA 5340-834-8330 DUST PLUG											
MF	O			4720EG003-4C0140	<81996>	.HOSE ASSEMBLY,..... TETRAFLUOROETHYLENE		EA		1						110	66B
						MAKEFR											
						AR 4720-857-1732 HOSE											
						2 EA 4730-889-2474 ADAPTER											
						2 EA 5340-834-8330 PLUG											
P	O		4720-141-9157	AN6270-4-17-500	<88044>	.HOSE ASSEMBLY,RUBBER.....		EA		1	*	*	*		*	110	66C
P	O		4720-289-6161	AN6270-4-21	<88044>	.HOSE ASSEMBLY,RUBBER.....		EA		1	*	*	*		*	110	66D

(1) SOURCE, MAINT AND REC CODE (a) SOURCE CODE	(b) MAINT LEVEL	(c) REC CODE	(2) FEDERAL STOCK NUMBER	REFERENCE NUMBER		(3) DESCRIPTION	MODELS USABLE ON CH-34C	(4) UNIT OF ISSUE	(5) QTY INC IN UNIT PACK	(6) QTY INC IN UNIT	(7) 30-DAY DS GS MAINT ALW (a) 1-20	(b) 21-50	(c) 51-100	(8) 1-YR ALW PER 100 EQUIP CNTGCY	(9) DEPOT MAINT ALW PER 100 EQUIP	(10) ILLUSTRATION (a) FIG NO	(b) ITEM NO
MF	F			S1645-61100-11	<78286>	.TUBE ASSEMBLY.....		EA		1						110	67
						MAKEFR											
						AR 4710-278-6398 TUBE											
						2 EA 4730-277-9746 SLEEVE											
						2 EA 4730-302-8641 NUT											
MF	O			S1645-61501-1	<78286>	.TUBE ASSEMBLY.....NOTE 1		EA		1						110	
			4730-203-2658	AN818-4C	<88044>	..NUT,TUBE,COUPLING.....		EA		2	*	*	*		*	110	68
			4730-969-0605	MS20819-4C	<96906>	..SLEEVE,FLARED TUBE FITTING.		EA		2	*	*	*		*	110	69
			1560-701-5729	S1645-61100-22	<78286>	.TUBE.....		EA		1						110	71
MF	O			S1645-61501-12	<78286>	.TUBE ASSEMBLY.....		EA		1						110	
						MAKEFR											
						AR 4710-278-6398 TUBE											
						2 EA 4730-277-9746 SLEEVE											
						2 EA 4730-302-8641 NUT											
AF	O			S1645-61100-10	<78286>	.TUBE ASSEMBLY.....		EA		1						110	75
			4730-287-0289	AN818-4D	<88044>	..NUT,TUBE,COUPLING.....		EA		2	*	*	*		*	110	76
			4730-302-8641	MS20819-4D	<96906>	..SLEEVE,FLARED TUBE.....		EA		2	*	*	*		*	110	77
						NOTE 1											
						MAKEFR											
						AR 4710-278-6398 TUBE											
						2 EA 4730-287-0289 NUT											
						2 EA 4730-302-8641 SLEEVE											
				S1645-61102	<78286>	FLIGHT AND ENGINE.....		EA								111	
						INSTRUMENT PIPING											
						INSTALLATION USBL EFF											
						54-3000 & SUBSEQUENT SEE											
						FIG.109 FOR NHA											
AF	O			S1645-61100-15	<78286>	.TUBE ASSEMBLY.....		EA		1						111	1
			4730-287-0289	AN818-4D	<88044>	..NUT,TUBE,COUPLING.....		EA		2	*	*	*		*	111	2
			4730-302-8641	MS20819-4D	<96906>	..SLEEVE,FLARED TUBE FITTING.		EA		2	*	*	*		*	111	3
MF	F			S1645-61100-14	<78286>	.TUBE ASSEMBLY.....NOTE 1		EA		1						111	5
			4730-287-0289	AN818-4D	<88044>	..NUT,TUBE,COUPLING.....		EA		2	*	*	*		*	111	6
			4730-302-8641	MS20819-4D	<96906>	..SLEEVE,FLARED TUBE FITTING.		EA		2	*	*	*		*	111	7
AF	O			S1645-61100-13	<78286>	.TUBE ASSEMBLY.....		EA		1						111	9
MF	F			S1645-61501-2	<78286>	.TUBE ASSEMBLY.....NOTE 1		EA		1						111	
			4730-203-2658	AN818-4C	<88044>	..NUT,TUBE,COUPLING.....		EA		2	*	*	*		*	111	10
			4730-969-0605	MS20819-4C	<96906>	..SLEEVE,FLARED TUBE FITTING.		EA		2	*	*	*		*	111	11
MF	O			4720EG003-4C0450	<81996>	.HOSE ASSEMBLY,.....		EA		1						111	13
						TETRAFLUOROETHYLENE											
						MAKEFR											
						AR 4720-857-1732 HOSE											
						2 EA 4730-952-5532 NIPPLE											
						2 EA 4730-967-9513 SOCKET											
						2 EA 4730-967-9521 SLEEVE											
						2 EA 5340-834-8330 DUST PLUG											
P	O		4730-541-8997	015501S5-4D	<00624>	.COUPLING,HALF,SELF-SEALING..		EA		1	REF	REF	REF	REF	REF	111	16

(1) SOURCE, MAINT AND REC CODE (a) SOURCE	(b) MAINT	(c) REC	(2) FEDERAL STOCK NUMBER	REFERENCE NUMBER		(3) DESCRIPTION	MODELS USABLE ON CH-34C	(4) UNIT OF ISSUE	(5) QTY INC IN UNIT PACK	(6) QTY INC IN UNIT	(7) 30-DAY DS GS MAINT ALW (a) 1-20	(b) 21-50	(c) 51-100	(8) 1-YR ALW PER 100 EQU.P CNTGCY	(9) DEPOT MAINT ALW PER 100 EQUIP	(10) ILLUSTRATION (a) FIG NO	(b) ITEM NO
AF	O			S1645-61100-20	<78286>	.TUBE ASSEMBLY.....		EA		1						111	17
			4730-287-0289	AN818-4D	<88044>	..NUT,TUBE ASSEMBLY.....		EA		2	*	*	*		*	111	18
			4730-302-8641	MS20819-4D	<96906>	..SLEEVE,FLARED TUBE FITTING.		EA		2	*	*	*		*	111	19
			4720-289-6162	AN6270-4-16	<88044>	.HOSE ASSEMBLY,RUBBER-..... ALTIMETER		EA		1	*	*	2		*	111	20A
			4720-200-0423	AN6270-4-14	<88044>	.HOSE ASSEMBLY,RUBBER-RATE... OF CLIMB		EA		1	*	*	*		*	111	20B
			4720-200-0423	AN6270-4-14	<88044>	.HOSE ASSEMBLY,RUBBER-..... MANIFOLD PRESSURE-COPILOT		EA		1	*	*	*		*	111	20C
MF	O			4720EG003-4C0100	<81996>	.HOSE ASSEMBLY,RUBBER-PURGE.. VALVE		EA		1						111	21
						MAKEFR											
						AR 4720-857-1732 HOSE ASSY											
						2 EA 4730-952-5532 ELBOW											
						2 EA 4730-967-9513 SOCKET											
						2 EA 4730-967-9521 SLEEVE											
						AR 4720-857-1732 HOSE											
						2 EA 5340-834-8330 DUST,PLUG											
			4720-289-6161	AN6270-4-21	<88044>	.HOSE ASSEMBLY,RUBBER-..... AIRSPEED-STATIC PORT-PILOT		EA		1	*	*	*		*	111	22
P	F		4720-141-9157	AN6270-4-17-500	<88044>	.HOSE ASSEMBLY,RUBBER-..... MANIFOLD PRESSURE-PILOT		EA		1	*	*	*		*	111	23
P	F		4720-141-9157	AN6270-4-17-500	<88044>	.HOSE ASSEMBLY,RUBBER-..... AIRSPEED-STATIC PORT-COPILOT		EA		1	*	*	*		*	111	24
MF	F			S1645-61200-2	<78286>	.TUBE ASSEMBLY.....NOTE 1		EA		1						111	
			4730-287-0289	AN818-4D	<88044>	..NUT,TUBE,COUPLING.....		EA		2	*	*	*		*	111	
			4730-302-8641	MS20819-4D	<96906>	..SLEEVE,FLARED TUBE FITTING.		EA		2	*	*	*		*	111	
			4730-722-1207	MS24402D4	<96906>	.TEE,TUBE.....		EA		1	*	*	*		*	111	25
AF	O			S1645-61100-5	<78286>	.TUBE ASSEMBLY.....		EA		1						111	26
			4730-287-0289	AN818-4D	<88044>	..NUT,TUBE,COUPLING.....		EA		2	*	*	*		*	111	27
			4730-302-8641	MS20819-4D	<96906>	..SLEEVE,FLARED TUBE FITTING.		EA		2	*	*	*		*	111	28
MF	F			S1645-61100-4	<78286>	.TUBE ASSEMBLY.....NOTE 1		EA		1						111	30
			4730-334-7845	AN818-4	<88044>	..NUT,TUBE,COUPLING.....		EA		2	*	*	*		*	111	31
			4730-278-0678	MS20819-4	<96906>	..SLEEVE,FLARED TUBE FITTING.		EA		2	*	*	*		*	111	32
MF	F			S1645-61501-5	<78286>	.TUBE ASSEMBLY.....		EA		1						111	34
						MAKEFR											
						AR 4710-202-9731 TUBE											
						2 EA 4730-278-0678 SLEEVE											
						2 EA 4730-336-7845 NUT											
			4730-334-7845	AN818-4	<88044>	..NUT,TUBE,COUPLING.....		EA		2	*	*	*		*	111	35
			4730-278-0678	MS20819-4	<96906>	..SLEEVE,FLARED TUBE FITTING.		EA		2	*	*	*		*	111	36
MF	F			S1645-61102-2	<78286>	.TUBE ASSEMBLY.....NOTE 1		EA		1						111	38
			4730-287-0289	AN818-4D	<88044>	..NUT,TUBE,COUPLING.....		EA		2	*	*	*		*	111	39
			4730-302-8641	MS20819-4D	<96906>	..SLEEVE,FLARED TUBE FITTING.		EA		2	*	*	*		*	111	40
MF	O			S1645-61500-1	<78286>	.TUBE ASSEMBLY.....		EA		1						111	42
						MAKEFR											
						2 EA 4730-302-8641 SLEEVE											
						2 EA 4730-287-0289 NUT											
MF	F			S1645-61102-1	<78286>	.TUBE ASSEMBLY.....NOTE 1		EA		1						111	
			4730-287-0289	AN818-4D	<88044>	..NUT,TUBE,COUPLING.....		EA		2	*	*	*		*	111	43
			4730-302-8641	MS20819-4D	<96906>	..SLEEVE,FLARED TUBE FITTING.		EA		2	*	*	*		*	111	44

(1) SOURCE, MAINT AND REC CODE (a) SOURCE CODE	(b) MAINT LEVEL	(c) REC CODE	(2) FEDERAL STOCK NUMBER	REFERENCE NUMBER	(3) DESCRIPTION	MODELS USABLE ON CH-34C	(4) UNIT OF ISSUE	(5) QTY INC IN UNIT PACK	(6) QTY INC IN UNIT	(7) 30-DAY DS GS MAINT ALW (a) 1-20	(b) 21-50	(c) 51-100	(8) 1-YR ALW PER 100 EQUIP CNTGCY	(9) DEPOT MAINT ALW PER 100 EQUIP	(10) ILLUSTRATION (a) FIG NO	(b) ITEM NO
				S1645-61500-2	<78286> .TUBE ASSEMBLY,FLIGHT AND.... ENGINE		EA		1						111	46
			4730-287-0289	AN818-4D	<88044> ..NUT,TUBE,COUPLING.....		EA		2	*	*	*		*	111	47
			4730-302-8641	MS20819-4D	<96906> ..SLEEVE,FLARED TUBE FITTING.		EA		2	*	*	*		*	111	48
MF	F			S1645-61500-9	<78286> ..TUBE..... MAKEFR AR 4710-279-0958 TUBE		EA		1						111	49
				S1645-61500-3	<78286> .TUBE ASSEMBLY,INSTRUMENT....		EA		1						111	50
			4730-287-0289	AN818-4D	<88044> ..NUT,TUBE,COUPLING.....		EA		2	*	*	*		*	111	51
			4730-302-8641	MS20819-4D	<96906> ..SLEEVE,FLARED TUBE FITTING.		EA		2	*	*	*		*	111	52
MF	F			S1645-61500-10	<78286> ..TUBE..... MAKEFR AR 4710-279-0958 TUBE		EA		1						111	53
MF	O			S1645-61200-5	<78286> .TUBE ASSEMBLY,STATIC..... NOTE 1		EA		1						111	54
			4730-287-0289	AN818-4D	<88044> ..NUT,TUBE,COUPLING.....		EA		2	*	*	*		*	111	55
			4730-302-8641	MS20819-4D	<96906> ..SLEEVE,FLARED TUBE FITTING.		EA		2	*	*	*		*	111	56
AF	O			S1645-61200-3	<78286> .TUBE ASSEMBLY,STATIC.....		EA		1						111	58
			4730-287-0289	AN818-4D	<88044> ..NUT,TUBE,COUPLING.....		EA		2	*	*	*		*	111	59
			4730-302-8641	MS20819-4D	<96906> ..SLEEVE,FLARED TUBE FITTING.		EA		2	*	*	*		*	111	60
			4730-722-1207	MS24402D4	<96906> .TEE,TUBE.....		EA		1	*	*	*		*	111	62
MF	O			S1645-61200-11	<78286> .TUBE ASSEMBLY,STATIC DRAIN.. NOTE 1		EA		1						111	63
			4730-287-0289	AN818-4D	<88044> ..NUT,TUBE,COUPLING.....		EA		2	*	*	*		*	111	64
			4730-302-8641	MS20819-4D	<96906> ..SLEEVE,FLARED TUBE FITTING.		EA		2	*	*	*		*	111	65
			4720-289-2959	AN6270-4-18	<88044> .HOSE ASSEMBLY,RUBBER-..... AIRSPEED-PITOT TUBE-COPILOT		EA		1	*	*	*		*	111	66A
P	F		1560-590-7769	SS4015-4-19	<78286> .RESTRICTOR ASSEMBLY.....		EA		1	*	*	*		REF	111	67
MF	F			S1645-61200-1	<78286> .TUBE ASSEMBLY.....NOTE 1		EA		1						111	68
			4730-287-0289	AN818-4D	<88044> ..NUT,TUBE,COUPLING.....		EA		2	*	*	*		*	111	69
			4730-302-8641	MS20819-4D	<96906> ..SLEEVE,FLARED TUBE FITTING.		EA		2	*	*	*		*	111	70
			4720-289-6161	AN6270-4-21	<88044> .HOSE ASSEMBLY,RUBBER-..... AIRSPEED-PITOT TUBE-PILOT		EA		1	*	*	*		*	111	71A
P	F		1560-590-7769	SS4015-4-19	<78286> .RESTRICTOR ASSEMBLY.....		EA		1	*	*	*		REF	111	72
AF	O			S1645-61100-12	<78286> .TUBE ASSEMBLY.....		EA		1						111	73
			4730-287-0289	AN818-4D	<88044> ..NUT,TUBE,COUPLING.....		EA		2	*	*	*		*	111	74
			4730-302-8641	MS20819-4D	<96906> ..SLEEVE,FLARED TUBE FITTING.		EA		2	*	*	*		*	111	75
MF	O			S1645-61100-11	<78286> .TUBE ASSEMBLY..... MAKEFR AR 4710-278-6398 TUBE 2 EA 4730-287-0289 NUT 2 EA 4730-302-8641 SLEEVE		EA		1						111	77
MF	O			S1645-61501-1	<78286> .TUBE ASSEMBLY..... NOTE 1		EA		1						111	
			4730-334-7845	AN818-4	<88044> ..NUT,TUBE,COUPLING.....		EA		2	*	*	*		*	111	78
			4730-969-0605	MS20819-4C	<96906> ..SLEEVE,FLARED TUBE COUPLING		EA		2	*	*	*		*	111	79
			1560-701-5729	S1645-61100-22	<78286> .TUBE ASSEMBLY.....		EA		1						111	81
				S1645-61501-12	<78286> .TUBE ASSEMBLY.....		EA		1						111	
			4730-287-0289	AN818-4D	<88044> ..NUT,TUBE,COUPLING.....		EA		2	*	*	*		*	111	82
			4730-302-8641	MS20819-4D	<88044> ..SLEEVE,TUBE,COUPLING.....		EA		2	*	*	*		*	111	83
AF	O			S1645-61100-10	<78286> .TUBE ASSEMBLY.....		EA		1						111	85

(1) SOURCE, MAINT AND REC CODE (a) SOURCE CODE	(b) MAINT CATEGORY	(c) REC LEVEL CODE	(2) FEDERAL STOCK NUMBER	REFERENCE NUMBER		(3) DESCRIPTION	MODELS USABLE ON CH-34C	(4) UNIT OF ISSUE	(5) QTY INC IN UNIT PACK	(6) QTY INC IN UNIT	(7) 30-DAY DS GS MAINT ALW (a) 1-20	(b) 21-50	(c) 51-100	(8) 1-YR ALW PER 100 EQUIP CNTGCY	(9) DEPOT MAINT ALW PER 100 EQUIP	(10) ILLUSTRATION (a) FIG NO	(b) ITEM NO
			4730-287-0289	AN818-4D	<88044>	..NUT,TUBE,COUPLING.....		EA		2	*	*	*		*	111	86
			4730-302-8641	MS20819-4D	<96906>	..SLEEVE,FLARED TUBE FITTING.		EA		2	*	*	*		*	111	87
						NOTE 1											
						MAKEFR											
						AR 4710-278-6398 TUBE											
						2 EA 4730-287-0289 NUT											
						2 EA 4730-302-8641 SLEEVE											
				S1645-65020	<78286>	FLIGHT AND ENGINE.....		EA								112	
						INSTRUMENT PANEL											
						INSTALLATION SEE FIG.109											
						FOR NHA											
P	F		1560-591-0555	S1645-65460-3	<78286>	.COWL ASSEMBLY,INSTRUMENT....		EA		1	*	*	*		*	112	1
						PANEL RPLS--											
						1560-563-9962											
P	F		5325-298-7003	2600-3W	<71286>	..STUD ASSEMBLY.....		EA		2	*	*	*		*	112	2
P	F		5325-282-0624	2600-3	<71286>	..STUD ASSEMBLY.....		EA		9	*	*	*		*	112	3
X2	F			S1645-65460-2	<78286>	..COWL ASSEMBLY.....		EA		1						112	4
P	O		1560-520-6324	S1645-65131-1	<78286>	.SHOCK MOUNT ASSEMBLY-LH.....		EA		1	*	2	2		*	112	5
P	O		1560-520-6325	S1645-65131-2	<78286>	.SHOCK MOUNT ASSEMBLY-RH.....		EA		1	*	2	2		*	112	
						ATTACHING PARTS											
			5306-182-1855	AN3CH6A	<88044>	.BOLT,MACHINE.....		EA		1	*	*	*		AR	112	6
			5310-183-4406	AN960PD10	<88044>	.WASHER,FLAT.....		HD		4	*	*	*		*	112	
			5310-263-2862	MS21045C3	<96906>	.NUT,SELF-LOCKING,HEXAGON....		HD		1	*	*	*		*	112	
			5306-182-1856	AN3CH7A	<88044>	.BOLT,MACHINE.....		EA		1	*	*	*		*	112	7
			5310-183-4406	AN960PD10	<88044>	.WASHER,FLAT.....		HD		4	*	*	*		*	112	
			5310-263-2862	MS21045C3	<96906>	.NUT,SELF-LOCKING,HEXAGON....		HD		1	*	*	*		*	112	
						---*---											
X2	F			S1645-65134	<78286>	..SHOE.....		EA		1						112	8
						ATTACHING PARTS											
			5310-579-5554	MS35333-35	<96906>	..WASHER,LOCK.....		HD		4	*	*	*		*	112	
			5310-266-0516	AN340C2	<88044>	..NUT,PLAIN,HEXAGON.....		EA		2	*	*	*		*	112	
						---*---											
X2	F			S1645-65134	<78286>	..SHOE.....		EA		1						112	
						ATTACHING PARTS											
			5305-281-8892	AN515C2-5	<88044>	..SCREW,MACHINE.....		EA		2	*	*	*		*	112	15
			5310-579-5554	MS35333-35	<96906>	..WASHER,LOCK.....		HD		4	*	*	*		*	112	
			5310-266-0516	AN340C2	<88044>	..NUT,PLAIN.....		EA		2	*	*	*		*	112	
						---*---											
			5305-922-8778	AN500AC2-4	<88044>	..SCREW,MACHINE.....		GR		2	*	*	*		*	112	16
MF	F			S1645-65039	<78286>	..PIN.....		EA		1						112	19
						MAKEFR											
						AR 9510-243-7612 TOOL STEEL											
X2	F			S1645-65034	<78286>	..WASHER.....		EA		1						112	21
P	F		1560-520-1019	S1645-65407	<78286>	..SPRING,HELICAL,COMPRESSION.		EA		1	*	*	*		*	112	22
P	F		1560-586-6780	S1645-65045-3	<78286>	..CUSHION,SHOCK MOUNT.....		EA		1	*	*	*		*	112	23
X2	F			S1645-65034	<78286>	..WASHER.....		EA		1						112	24

(1) SOURCE, MAINT AND REC CODE (a) SOURCE CODE	(b) MAINT LEVEL	(c) REC CODE	(2) FEDERAL STOCK NUMBER	REFERENCE NUMBER		(3) DESCRIPTION	MODELS USABLE ON CH-34C	(4) UNIT OF ISSUE	(5) QTY INC IN UNIT PACK	(6) QTY INC IN UNIT	(7) 30-DAY DS GS MAINT ALW (a) 1-20	(b) 21-50	(c) 51-100	(8) 1-YR ALW PER 100 EQUIP CNTGCY	(9) DEPOT MAINT ALW PER 100 EQUIP	(10) ILLUSTRATION (a) FIG NO	(b) ITEM NO
MF	F			S1645-65039	<78286>	..PIN..... MAKEFR AR 9510-243-7612 TOOL STEEL		EA		1						112	26
P	F		9320-587-0978	S1645-65045-4	<78286>	..PAD,CUSHIONING..... INSTRUMENT PANEL		EA		1	*	*	*		*	112	27
X2	F			S1645-65133	<78286>	..TIE ROD ASSEMBLY-LH.....		EA		1						112	28
X1				S1645-65133-3	<78286>	...FILLER.....		EA		1						112	29
P	F		1560-018-3370	S1645-65133-2	<78286>	...TUBE,INSTRUMENT SHOCK..... MOUNTS		EA		1	*	*	*		*	112	30
			1560-564-5729	S1645-65040-1	<78286>	.SHOCKMOUNT RPL-BY..... 1560-769-3118										112	
P	O		1560-769-3118	S1645-65070-7	<78286>	.MOUNT ASSEMBLY RPLS--..... 1560-564-5729 & 1560-654-1395 ATTACHING PARTS		EA		1	2	2	3		*	112	31
			5306-182-2057	AN3H4A	<88044>	.BOLT,MACHINE.....		HD		8	*	*	*		*	112	32
			5310-167-0753	AN960PD10L	<88044>	.WASHER,FLAT..... ---*---		HD		8	*	*	*		*	112	
P	F		5306-691-4466	S1645-65044	<78286>	..BOLT.....		EA		1	*	*	*		*	112	33
			5310-660-3381	MS21083N5	<96906>	..NUT,SELF-LOCKING,HEXAGON...		EA		1	*	*	*		*	112	34
P	F		1560-589-4290	S1645-65045-1	<78286>	..CUSHION,INSTRUMENT PANEL... SHOCK MOUNT		EA		1	*	*	*		*	112	35
P	F		1560-570-4894	S1645-65046	<78286>	..SLIDE ASSEMBLY.....		EA		1	*	*	*		*	112	36
P	F		1560-520-1018	S1645-65405	<78286>	..SPRING,HELICAL,COMPRESSION.		EA		1	*	*	*		*	112	37
P	F		1560-589-4291	S1645-65045-2	<78286>	..CUSHION,INSTRUMENT PANEL... SHOCK MOUNT		EA		1	*	*	*		*	112	38
X2	F		1560-765-9620	S1645-65047	<78286>	..BASE.....		EA		1	*	*	*		*	112	
X2	F			S1645-65042	<78286>	..BODY.....		EA		1						112	39
P	O		1560-769-3118	S1645-65070-7	<78286>	.MOUNT ASSEMBLY RPLS--..... 1560-564-5729, 1560-654-1395 ATTACHING PARTS		EA		1	REF	REF	REF		REF	112	40
			5306-182-2057	AN3H4A	<88044>	.BOLT,MACHINE.....		HD		8	*	*	*		*	112	41
			5310-167-0753	AN960PD10L	<88044>	.WASHER,FLAT..... ---*---		HD		8	*	*	*		*	112	
			5310-922-9081	MS21083D4	<96906>	..NUT,SELF-LOCKING,HEXAGON...		EA		1	*	*	*		*	112	44
X2	F		1560-600-4568	S1645-65056	<78286>	..UNIT DAMPER,INSTRUMENT.....		EA		1	*	*	*		*	112	47
P	F		1560-520-1018	S1645-65405	<78286>	..SPRING,HELICAL,COMPRESSION.		EA		1	*	*	*		REF	112	49
X2	F			S1645-65053	<78286>	..BODY.....		EA		1						112	50
P	O		1560-769-3118	S1645-65070-7	<78286>	.MOUNT ASSEMBLY RPLS--..... 1560-564-5729, 1560-654-1395 ATTACHING PARTS		EA		2	REF	REF	REF		REF	112	51
			5306-182-2057	AN3H4A	<88044>	.BOLT,MACHINE.....		HD		8	*	*	*		*	112	52
			5310-167-0753	AN960PD10L	<88044>	.WASHER,FLAT..... ---*---		HD		8	*	*	*		*	112	
P	O		1560-894-0455	S1645-65056-1	<78286>	..DAMPER.....		EA		1	2	4	9			112	57
X2	F			S1645-65072-1	<78286>	..BODY.....		EA		1						112	60
AH	H			S1645-65400	<78286>	.PANEL ASSEMBLY,FLIGHT AND... ENGINE INSTRUMENT USBL EFF 53-4475 THRU 54-2999 SEE FIG.113 FOR BREAKDOWN		EA		1						112	61

(1) SOURCE, MAINT AND REC CODE (a) RECOVERY CODE	(b) SOURCE CODE	(c) MAINT CODE	(2) FEDERAL STOCK NUMBER	REFERENCE NUMBER	(3) DESCRIPTION	MODELS USABLE ON CH-34C	(4) UNIT OF ISSUE	(5) QTY INC IN UNIT PACK	(6) QTY INC IN UNIT	(7) 30-DAY DS GS MAINT ALW (a) 1-20	(b) 21-50	(c) 51-100	(8) 1-YR ALW PER 100 EQUIP CNTGCY	(9) DEPOT MAINT ALW PER 100 EQUIP	(10) ILLUSTRATION (a) FIG NO	(b) ITEM NO
AH	H			S1645-65500	<78286> .PANEL ASSEMBLY,FLIGHT AND... ENGINE INSTRUMENT USBL EFF 54-3000 THRU 56-4342 SEE FIG.114 FOR BREAKDOWN		EA		1						112	
AH	H			S1645-65500-1	<78286> .PANEL ASSEMBLY,FLIGHT AND... ENGINE INSTRUMENT USBL EFF 57-1684 THRU 57-1690, 57-1726 THRU 57-1741 SEE FIG.114 FOR BREAKDOWN		EA		1						112	
AH	H			S1645-65500-2	<78286> .PANEL ASSEMBLY,FLIGHT AND... ENGINE INSTRUMENT USBL EFF 57-1691 THRU 57-1725 SEE FIG.114 FOR BREAKDOWN		EA		1						112	
AH	H			S1645-65012	<78286> .PANEL ASSEMBLY,FLIGHT AND... ENGINE INSTRUMENT USBL EFF 57-1742 THRU 57-1770 & 58-1721 SEE FIG.114 FOR BREAKDOWN OBS-AFT-CMP-W TM 1H-34A-564		EA		1						112	
					PANEL ASSEMBLY-FLIGHT AND.... ENGINE INSTRUMENT USBL EFF 53-4475 THRU 54-2999										113	
AH	H			S1645-65400	<78286> PANEL ASSEMBLY-FLIGHT AND.... ENGINE INSTRUMENT USBL EFF 53-4475 THRU 54-2999 SEE FIG.112 FOR NHA		EA								113	
P	O		6605-584-4227	AN5823-1	<88044> .FORM,PRINTED.....		EA		1	REF	REF	REF		REF	113	1
P	O		9905-634-1473	AN5800-1	<88044> .HOLDER ASSEMBLY,CARD..... ATTACHING PARTS		EA		1	*	*	*		REF	113	
			5305-052-5968	MS35202-14	<96906> .SCREW,MACHINE.....				2	*	*	*		*	113	
			5310-857-5548	MS21044D04	<96906> .NUT,SELF-LOCKING,HEXAGON.... ---*---		EA		2	*	*	*		*	113	
			5930-655-1514	MS35058-22	<96906> .SWITCH,TOGGLE.....		EA		1	*	*	*		*	113	2
P	O		6210-025-7714	B4789	<72914> .LIGHT,PANEL.....		EA		1	*	*	*		*	113	3
P	O	R	6605-188-9025	15700	<81100> .INDICATOR,INDUCTION..... COMPASS SEE FIG.113A FOR BREAKDOWN ATTACHING PARTS		EA		1	*	*	2	10	*	113	
			5305-052-9501	MS35219-60	<96906> .SCREW,MACHINE.....		EA		2	*	*	*		*	113	
P	O		6220-243-8138	B4755	<72914> .LIGHT,PANEL..... ATTACHING PARTS		EA		1	*	*	*		*	113	4
			5305-902-1089	MS35202-31	<96906> .SCREW,MACHINE..... ---*---		EA		2	*	*	*		*	113	
P	O		6220-243-8138	B4755	<72914> .LIGHT,PANEL.....		EA		1	*	*	*		REF	113	5
P	O	R	6610-580-7922	MS28024-3	<96906> .INDICATOR,TURN AND SLIP..... RPLS--		EA		1	*	2	2	26	*	113	

(1) SOURCE, MAINT AND REC CODE (a) SOURCE CODE	(b) MAINT LEVEL	(c) REC CODE	(2) FEDERAL STOCK NUMBER	REFERENCE NUMBER	(3) DESCRIPTION	MODELS USABLE ON CH-34C	(4) UNIT OF ISSUE	(5) QTY INC IN UNIT PACK	(6) QTY INC IN UNIT	(7) 30-DAY DS GS MAINT ALW (a) 1-20	(b) 21-50	(c) 51-100	(8) 1-YR ALW PER 100 EQUIP CNTGCY	(9) DEPOT MAINT ALW PER 100 EQUIP	(10) ILLUSTRATION (a) FIG NO	(b) ITEM NO
		R	6610-247-9350	B48D	<79318> .INDICATOR,TURN AND SLIP..... RPL-BY 6610-580-7922 SEE FIG.114G FOR BREAKDOWN										113	
		R	6610-388-0068	RCA2	<80510> .INDICATOR,TURN AND SLIP..... RPL-BY 6610-580-7922 SEE FIG.114E FOR BREAKDOWN										113	
		R	6610-398-0059	RCA1	<80510> .INDICATOR,TURN AND SLIP..... RPL-BY 6610-580-7922 SEE FIG.114E FOR BREAKDOWN										113	
		R	6610-515-5843	B4A	<79318> .INDICATOR,TURN AND SLIP..... RPL-BY 6610-580-7922										113	
		R	6610-515-5845	B4B	<79318> .INDICATOR,TURN AND SLIP..... RPL-BY 6610-580-7922										113	
		R	6610-526-4716	B4BK	<79318> .INDICATOR,TURN AND SLIP..... RPL-BY 6610-580-7922										113	
		R	6610-557-3114	MS28024-1	<96906> .INDICATOR,TURN AND SLIP..... RPL-BY 6610-580-7922										113	
		R	6610-659-9275	AAF261150	<80510> .INDICATOR,TURN AND SLIP..... RPL-BY 6610-580-7922										113	
		R	6610-663-4115	RCA2W	<80510> .INDICATOR,TURN AND SLIP..... RPL-BY 6610-580-7922 SEE FIG.114E FOR BREAKDOWN										113	
		R	6610-663-4136	B4	<79318> .INDICATOR,TURN AND SLIP..... RPL-BY 6610-580-7922 INTRCH										113	
P	O	R	6610-585-1145	A1600	<80510> .INDICATOR,TURN AND SLIP..... INTRCH 6610-580-7922		EA		1						113	
P	O	R	6610-585-1145	A1600A	<80510> .INDICATOR,TURN AND SLIP..... INTRCH 6610-580-7922		EA		1						113	
P	O	R	6610-089-6950	3935	<80510> .INDICTOR,TURN AND SLIP..... INTCH 6610-580-7922		EA		1						113	
					ATTACHING PARTS											
			5305-902-1089	MS35202-31	<96906> .SCREW,MACHINE.....		EA		2	*	*	*		*	113	
			5305-282-5956	AN526D0632R16	<88044> .SCREW,MACHINE.....		EA		2	*	*	*		*	113	
					---*---											
P	O		6210-519-2653	MS25010-4A	<96906> .LIGHT,PANEL.....		EA		2	*	2	2	24	*	113	6
P	O		6210-229-5188	A4613	<72914> .LIGHT,PANEL.....		EA		1	*	*	*		*	113	7
			6625-504-2329	Z22-84	<16688> .METER,ARBITRARY SCALE..... RPL-BY 6625-544-5899										113	
			6625-629-4824	Z22-120	<16688> .METER,ARBITRARY SCALE..... RPL-BY 6625-544-5899										113	
			6625-631-8060	128308	<65092> .METER,ARBITRARY SCALE..... RPL-BY 6625-544-5899 INTRCH										113	
P	O		6625-500-2218	Z22-76	<16688> .METER,ARBITRARY SCALE..... INTRCH 6625-544-5899		EA		1						113	
P	O		6625-519-0045	90702	<51596> .METER,ARBITRARY SCALE..... INTRCH 6625-544-5899		EA		1						113	
P	O		6625-544-5899	MS25025-1	<96906> .METER ARBITRARY SCALE..... RPLS-- 6625-500-2218, 6625-504-2329, 6625-519-0045,		EA		1	2	2	3	36	*	113	

(1) SOURCE, MAINT AND REC CODE (a) SOURCE CODE	(b) MAINT LEVEL	(c) REC CODE	(2) FEDERAL STOCK NUMBER	REFERENCE NUMBER	(3) DESCRIPTION	MODELS USABLE ON CH-34C	(4) UNIT OF ISSUE	(5) QTY INC IN UNIT PACK	(6) QTY INC IN UNIT	(7) 30-DAY DS GS MAINT ALW (a) 1-20	(b) 21-50	(c) 51-100	(8) 1-YR ALW PER 100 EQUIP CNTGCY	(9) DEPOT MAINT ALW PER 100 EQUIP	(10) ILLUSTRATION (a) FIG NO	(b) ITEM NO
					CONTINUED										113	
					RPL-BY 6610-731-7969											
		R	6610-663-8800	14602-1JF1 <19315>	.INDICATOR,ATTITUDE.....										113	
					RPL-BY 6610-731-7969											
		R	6610-699-5531	673391 <56232>	.INDICATOR,ATTITUDE.....										113	
					RPL-BY 6610-731-7969											
		R	6610-918-3376	146021JKI <19315>	.INDICATOR,ATTITUDE.....										113	
					RPL-BY 6610-731-7969											
		R	6610-924-7784	14602-1JK1 <06840>	.INDICATOR,ATTITUDE.....										113	
					RPL-BY 6610-731-7969											
					ATTACHING,PARTS											
			5305-925-4849	AN505DD6-20 <88044>	.SCREW,MACHINE.....		GR		2	*	*	*		*	113	
			5305-060-7900	AN526DD632R20 <88044>	.SCREW,MACHINE.....		EA		1	*	*	*		*	113	
					---*---											
P	O		1680-572-5424	BUA9860-1 <22040>	.CARD,AIRSPEED CORRECTION....		EA		1	2	6	12		*	113	11
P	O		9905-205-1606	FNA324 <22040>	.HOLDER,CORRECTION CARD.....		EA		1	*	*	*		*	113	
					ATTACHING PARTS											
			5305-253-5615	MS21318-21 <96906>	.SCREW,DRIVE.....		BX		2	*	*	*		*	113	
					---*---											
P	O		6220-243-8138	B4755 <72914>	.LIGHT,PANEL.....		EA		1	*	*	*		REF	113	12
			6610-487-4090	586BK1-0153 <89944>	.INDICATOR,INDICATED AIR.....										113	
					SPEED RPL-BY											
					6610-557-3170											
			6610-526-4397	MS28045T2 <96906>	.INDICATOR,INDICATED AIR.....										113	
					SPEED RPL-BY											
					6610-557-3170											
			6610-526-7895	586BK4-0153 <89944>	.INDICATOR,INDICATED AIR.....										113	
					SPEED RPL-BY											
					6610-557-3170											
			6610-557-3171	AN5860W2 <88044>	.INDICATED,INDICATED AIR.....										113	
					SPEED RPL-BY											
					6610-557-3170											
			6610-564-9351	586BK0153 <89944>	.INDICATED,INDICATED AIR.....										113	
					SPEED RPL-BY											
					6610-557-3170											
			6610-663-5799	81132-4 <89446>	.INDICATED,INDICATED AIR.....										113	
					SPEED RPL-BY											
					6610-557-3170											
			6610-663-8711	1296-5-0193 <89944>	.INDICATED,INDICATED.....										113	
					SPEED RPL-BY											
					6610-557-3170											
P	O		6610-557-3170	MS28045T1 <96906>	.INDICATOR,INDICATED AIR.....		EA		1	2	2	3	36	*	113	
					SPEED RPLS--											
					6610-487-4090,											
					6610-526-4397,											
					6610-526-7895,											
					6610-557-3171,											
					6610-564-9351,											
					6610-663-5799,&											
					6610-663-8711											
					ATTACHING PARTS											
			5305-902-1089	MS35202-31 <96906>	.SCREW,MACHINE.....		EA		2	*	*	*		*	113	

(1) SOURCE, MAINT AND REC CODE (a) SOURCE CODE	(b) MAINT LEVEL	(c) REC CODE	(2) FEDERAL STOCK NUMBER	REFERENCE NUMBER		3 DESCRIPTION	MODELS USABLE ON CH-34C	(4) UNIT OF ISSUE	(5) QTY INC IN UNIT PACK	(6) QTY INC IN UNIT	(7) 30-DAY DS GS MAINT ALW (a) 1-20	(b) 21-50	(c) 51-100	(8) 1-YR ALW PER 100 EQUIP CNTGCY	(9) DEPOT MAINT ALW PER 100 EQUIP	(10) ILLUSTRATION (a) FIG NO	(b) ITEM NO
			5305-282-5956	AN526DD632R16	<88044>	.SCREW,MACHINE.....		EA		2	*	*	*		*	113	
				S1649-65135-1	<76286>	.PLATE,INSTRUCTION.....		EA		1						113	13
P	O		6220-243-8138	84753	<72914>	.LIGHT,PANEL.....		EA		1	*	*	*		REF	113	14
		R	6620-260-2840	8DJ19ACV	<24446>	.INDICATOR,ELECTRICAL-..... TACHOMETER RPL-BY 6680-659-9276										113	
		R	6620-514-5793	8DJ19GAE	<24446>	.INDICATOR,ELECTRICAL-..... TACHOMETER RPL-BY 6680-659-9276										113	
		R	6620-526-5011	8DJ19GAF	<24446>	.INDICATOR,ELECTRICAL-..... TACHOMETER RPL-BY 6680-659-9276										113	
		R	6620-561-5634	8DJ19GAC	<24446>	.INDICATOR,TACHOMETER..... RPL-BY 6680-659-9276										113	
		R	6620-663-4261	8DJ19ACV3	<24446>	.INDICATOR,ELECTRICAL-..... TACHOMETER RPL-BY 6680-639-9276 SEE FIG.114D FOR BREAKDOWN										113	
		R	6620-663-4282	8DJ19GAF6	<24446>	.INDICATOR,ELECTRICAL-..... TACHOMETER RPL-BY 6680-659-9276 SEE FIG.114D FOR BREAKDOWN										113	
		R	6620-663-7766	8DJ19GAE5	<24446>	.INDICATOR,ELECTRICAL-..... TACHOMETER RPL-BY 6680-659-9276										113	
		R	6620-767-8151	8DJ67FAC1	<24446>	.INDICATOR,ELECTRICAL-..... TACHOMETER RPL-BY 6680-659-9276 SEE FIG.114D FOR BREAKDOWN										113	
		R	6620-771-0697	8DJ19ACV5	<76119>	.INDICATOR-TACHOMETER..... RPL-BY 6680-659-9276										113	
		R	6620-797-3665	8DJ19ACV6	<24446>	.INDICATOR,ELECTRICAL-..... TACHOMETER RPL-BY 6680-659-9276										113	
		R	6680-690-2929	47-[illegible]-018-2	<97499>	.TACHOMETER-INDICATOR..... RPL-BY 6680-659-9276										113	
P	O	R	6680-659-9276	8DJ67FAB1	<97424>	.INDICATOR,TACHOMETER..... SEE FIG. 140 FOR BREAKDOWN ATTACHING PARTS		EA		1	2	2	3	31	*	113	
			5305-902-1089	MS35202-31	<96900>	.SCREW,MACHINE.....		EA		2	*	*	*		*	113	
			5305-282-5956	AN526DD632R16	<88044>	.SCREW,MACHINE.....		EA		2	*	*	*		*	113	
P	O		6695-578-5284	8948[illegible]0162	<97424>	.BEZEL,INSTRUMENT MOUNTING...		EA		1	*	*	*		*	113	
P	O		6220-243-8138	84753	<72914>	.LIGHT,PANEL.....		EA		1	*	*	*		REF	113	
P	H		6210-283-9250	4885	<72914>	.LIGHT,PANEL, [illegible] 6210-283-9250		EA		1	*	*	*			113	
P	O	R	6620-557-0266	AAF115000	<80464>	.GAGE,ABSOLUTE PRESSURE..... DIAL INDICATING ARROW		EA		1	*	2	2	[illegible]	*	113	
P	O	R	6620-561-5646	AWG-10A	<61349>	.GAGE,ABSOLUTE PRESSURE..... DIAL INDICATING		EA		1						113	

(1) SOURCE, MAINT AND REC CODE (a) SOURCE CODE	(b) MAINT LEVEL	(c) REC CODE	(2) FEDERAL STOCK NUMBER	REFERENCE NUMBER		(3) DESCRIPTION	MODELS USABLE ON CH-34C	(4) UNIT OF ISSUE	(5) QTY INC IN UNIT PACK	(6) QTY INC IN UNIT	(7) 30-DAY DS/GS MAINT ALW (a) 1-20	(b) 21-50	(c) 51-100	(8) 1-YR ALWPER 100 EQUIP CNTGCY	(9) DEPOT MAINT ALWPER 100 EQUIP	(10) ILLUSTRATION (a) FIG NO	(b) ITEM NO
						CONTINUED										113	
						INTRCH 6620-557-0266											
						SEE FIG.113C FOR BREAKDOWN											
						ATTACHING PARTS											
			5305-902-1089	MS35202-31	<96906>	.SCREW,MACHINE.....		EA		2	*	*	*		*	113	
			5305-282-5956	AN526DD632R16	<88044>	.SCREW,MACHINE.....		EA		2	*	*	*		*	113	
			5340-579-6359	MS28042-2	<96906>	.CLAMP,LOOP.....		EA		1	*	*	*		*	113	
						---*---											
P	O		6220-226-9259	A6815-24	<72914>	.LIGHT,PANEL.....		EA		1	*	*	*		*	113	
P	O		1650-528-2386	W1700 1-8D	<96138>	.VALVE ASSEMBLY.....		EA		1	*	2	2	12	*	113	16
P	F		6210-504-0167	7919	<72914>	.LIGHT,PANEL RPLS-.....		EA		1	5	13	26		*	113	17
						6220-295-1108,											
						6220-299-4065,&											
						6220-504-0167											
P	O		6240-299-4742	1495	<24446>	.LAMP,INCANDESCENT.....		EA		1	*	*	*		*	113	
			6685-056-0542	25101A37B1C1	<06840>	.INDICATOR,PRESSURE RPL-BY..										113	
						6685-557-0215											
			6685-514-5070	25101A37B1B1	<19315>	.INDICATOR,PRESSURE RPL-BY..										113	
						6685-557-0215											
						SEE FIG.114K FOR BREAKDOWN											
			6685-526-4547	1558-041044	<89944>	.INDICATOR,PRESSURE RPL-BY..										113	
						6685-557-0215											
			6685-526-5868	SR7A	<61349>	.INDICATOR,PRESSURE RPL-BY..										113	
						6685-557-0215											
			6685-526-7179	25100A37B1B1	<06840>	.INDICATOR,PRESSURE RPL-BY..										113	
						6685-557-0215											
			6685-531-2432	25100A37A1B1	<19315>	.INDICATOR,PRESSURE RPL-BY..										113	
						6685-557-0215											
P	O		6685-557-0215	25122A37B1A1	<02987>	.INDICATOR,PRESSURE RPLS--..		EA		2	2	2	3	34	*	113	18
						6685-056-0542,											
						6685-514-5070,											
						6685-526-4547,											
						6685-526-5868,											
						6685-526-7179,&											
						6685-531-2432											
						ATTACHING PARTS											
			5340-558-3617	MS28042-1	<96906>	.CLAMP,MOUNTING.....		EA		2	*	*	*		*	113	
						---*---											
P	O	R	6680-566-6660	169-08A19	<83296>	.SELECTOR SWITCH SIMULATOR...		EA		1	*	2	2	12	*	113	18A
						ATTACHING PARTS											
			5340-558-3617	MS28042-1	<96906>	.CLAMP,MOUNTING.....		EA		2	*	*	*		*	113	
						---*---											
P	D		6680-566-6661	169-56	<83296>	..HOUSING ASSEMBLY,SELECTOR..		EA		1					*	113	
P	D		6680-076-7331	169-32-113	<83296>	...SHELL.....		EA		1					*	113	
P	H		5935-533-9647	169-49	<83296>	..BACKPLATE AND SPACER.....		EA		1	*	*	*		*	113	
						ASSEMBLY											
P	D		6680-651-8005	169-55	<83296>	...SPACER.....		EA		3					*	113	
P	H		5910-538-2318	1101-98-7	<97485>	..CAPACITOR,FIXED,CERAMIC....		EA		1	*	*	*		*	113	
						DIELECTRIC											
P	H		5910-538-2316	1101-98-9	<72982>	..CAPACITOR.....		EA		1	*	*	*		*	113	
P	H		5910-069-6295	1101-98-8	<72982>	..CAPACITOR.....		EA		1	*	*	*		*	113	
P	H		5910-609-7460	1101-96-1	<83296>	..CAPACITOR,FIXED,CERAMIC....		EA		3	*	*	*		*	113	

(1) SOURCE, MAINT AND REC CODE (a) SOURCE CODE	(b) MAINT LEVEL	(c) REC CODE	(2) FEDERAL STOCK NUMBER	REFERENCE NUMBER		(3) DESCRIPTION	MODELS USABLE ON CH-34C	(4) UNIT OF ISSUE	(5) QTY INC IN UNIT PACK	(6) QTY INC IN UNIT	(7) 30-DAY DS GS MAINT ALW (a) 1-20	(b) 21-50	(c) 51-100	(8) 1-YR ALW PER 100 EQUIP CNTGCY	(9) DEPOT MAINT ALW PER 100 EQUIP	(10) ILLUSTRATION (a) FIG NO	(b) ITEM NO
P	O		5355-579-2896	AN3219-1	<88044>	..KNOB.....		EA		1	*	*	*		*	113	
P	O		6685-553-4726	MI6533TYPEG10	<81349>	.INDICATOR,TEMPERATURE..... ELECTRICAL RESISTANCE RPLS--		EA		1	*	*	*		*	113	19
			6615-603-9002	AN5791	<88044>	.INDICATOR,TEMPERATURE..... RPL-BY 6685-553-4726										113	
			6685-487-4274	35350	<80099>	.INDICATOR,TEMPERATURE..... RPL-BY 6685-553-4726										113	
			6685-487-4455	47B38P	<35918>	.INDICATOR,TEMPERATURE..... RPL-BY 6685-553-4726										113	
			6685-487-4458	47B51	<35918>	.INDICATOR,TEMPERATURE..... RPL-BY 6685-553-4726										113	
			6685-487-4611	125439	<65092>	.INDICATOR,TEMPERATURE..... RPL-BY 6685-553-4726										113	
			6685-514-5331	132702	<65092>	.INDICATOR,TEMPERATURE..... RPL-BY 6685-553-4726										113	
			6685-526-4559	147B13A	<35918>	.INDICATOR,TEMPERATURE..... RPL-BY 6685-553-4726										113	
			6685-536-5013	47B38P2	<35918>	.INDICATOR,TEMPERATURE..... RPL-BY 6685-553-4726 INTRCH										113	
P	O		6685-487-4441	147B7	<35913>	.INDICATOR,TEMPERATURE..... INTRCH 6685-553-4726		EA		1						113	
P	O		6685-526-4431	147B30	<35918>	.INDICATOR,TEMPERATURE..... INTRCH 6685-553-4726		EA		1						113	
P	O		6685-526-6121	132875	<65092>	.INDICATOR,TEMPERATURE..... INTRCH 6685-553-4726		EA		1						113	
P	O		6685-526-7728	147B7A	<35918>	.INDICATOR,TEMPERATURE..... INTRCH 6685-553-4726		EA		1						113	
P	O		6685-526-7730	147B30A	<35918>	.INDICATOR,TEMPERATURE..... INTRCH 6685-553-4726 SEE FIG.114L FOR BREAKDOWN		EA		1						113	
P	O		6685-526-7731	137660	<65092>	.INDICATOR,TEMPERATURE..... INTRCH 6685-557-0372 SEE FIG.113D FOR BREAKDOWN ATTACHING PARTS		EA		1						113	
			5340-558-3617	MS28042-1	<96906>	.CLAMP,MOUNTING..... ---*---		EA		1	*	*	*		*	113	
P	O		6685-557-0371	MS28004-1	<96906>	.INDICATOR,TEMPERATURE..... ELECTRIC ATTACHING PARTS		EA		1	*	*	*	5	*	113	20
			5340-558-3617	MS28042-1	<96906>	.CLAMP,MOUNTING..... ---*---		EA		1	*	*	*		*	113	
			6685-487-4263	33204	<80099>	.INDICATOR,TEMPERATURE..... RPL-BY 6685-557-0370										113	
			6685-514-5327	MS28009-2	<96906>	.INDICATOR,TEMPERATURE..... RPL-BY 6685-557-0370										113	
			6685-779-8345	16283A	<06840>	.INDICATOR,TEMPERATURE..... RPL-BY 6685-557-0370										113	
P	O		6685-557-0370	MS28009-1	<96906>	.INDICATOR,TEMPERATURE..... ELECTRIC RPLS-- 6685-487-4263,		EA		1	*	*	2	10	*	113	21

(1) SOURCE, MAINT AND REC CODE (a) SOURCE CODE	(b) MAINT CODE	(c) REC CODE	(2) FEDERAL STOCK NUMBER	REFERENCE NUMBER	DESCRIPTION	MODELS USABLE ON CH-34C	(4) MAINT LEVEL	(5) QTY INC IN UNIT PACK	(6) QTY INC IN UNIT	(7) 30-DAY DEMANDS MAINT ALW (a) 1-20	(b) 21-50	(c) 51-100	(8) 1 YR MAINT ALW PER 100 EQUIP CONTROL	(9) DEPOT MAINT ALW PER 100 EQUIP	(10) ILLUSTRATION (a) FIG NO	(b) ITEM NO
					CONTINUED										113	21
					6605-01-5527, 6605-77-8345											
					ATTACHING PARTS											
			5340-558-3617	MS28042-1	<96906> CLAMP, MOUNTING		E4			*	*	*		*	113	
P	O		6620-557-0363	MS2[illegible]-3	<96906> INDICATOR, PRESSURE		E4		2	2	2	3	41	*	113	22
					ATTACHING PARTS											
			5340-558-3617	MS28042-1	<96906> CLAMP, MOUNTING		E4			*	*	*		*	113	
P	O		6620-514-5334	MS2[illegible]-1	<96906> INDICATOR, PRESSURE		E4			*	2	2	17	*	113	23
					ATTACHING PARTS											
			5340-558-3617	MS2[illegible]-1	<96906> CLAMP, MOUNTING		E4			*	*	*		*	113	
P	O	R	6660-526-5078	162-0251-873	<95485> INDICATOR, FUELED QUANTITY, BEAM ASSEMBLY FOR BREAKDOWN		E4		2	2	*	8	96	*	113	23A
					ATTACHING PARTS											
			5340-558-3617	MS28042-1	<96906> CLAMP, MOUNTING		E4		2	*	*	*		*	113	
P	O		6685-557-0370	MS28009-1	<96906> INDICATOR, TEMPERATURE, ELECTRICAL TYPE		E4		1	*	*	REF	REF	REF	113	24
					6685-827-4268, 6685-[illegible]-5327, 6685-77-8345											
					ATTACHING PARTS											
			5340-558-3617	MS28042-1	<96906> CLAMP, MOUNTING				1	*	*	*		*	113	
P	O		6620-557-0363	MS2[illegible]-3	<96906> INDICATOR, PRESSURE		E4		1	REF	REF	REF	REF	REF	113	25
					ATTACHING PARTS											
			5340-558-3617	MS28042-1	<96906> CLAMP, MOUNTING				1	*	*	*		*	113	
P	O		6210-519-0448	MS250[illegible]	<96906> LIGHT ASSEMBLY		E4		1	*	*	*		*	113	26
P	O		6210-519-2653	MS250[illegible]	<96906> PANEL		E4		1	*	REF	REF	REF	REF	113	
P	O		6240-155-9740	MS29231-[illegible]	<96906> INCANDESCENT		E4		1		19	37		*	113	
X2	F		1560-868-9786	S1645-[illegible]	<78296> PRESSURE		E4		1		*	*		*	113	
P	O		5930-296-6242	020216	<81449> SWITCH, PRESSURE		E4		1		*	*		*	113	27
P	O		6210-519-0448	MS250[illegible]-3	<96906> LIGHT ASSEMBLY		E4		1		*	*		REF	113	28
P	O		6210-519-2653	MS250[illegible]-2	<96906> PANEL		E4		1		REF	REF	REF	REF	113	
P	O		6220-243-8138	B4755	<72914> LIGHT, PANEL		E4		1		*			REF	113	29
P	H		6210-283-9250	4885	<72914> LIGHT, PANEL, [illegible]		E4		1		*	*		REF	113	
					[illegible]-2[illegible]-9299											
P	O	R	6620-557-0266	MB1	<81349> GAGE, ABSOLUTE PRESSURE		E4		1		REF	REF	REF	REF	113	
					DUAL INDICATING											
					INTRCH											
P	O	R	6620-561-5646	AN3-10A	<81349> GAGE, ABSOLUTE PRESSURE		E4		1						113	
					INDEPENDENT 6610-557-0266											
					ATTACHING PARTS											
			5305-902-1099	MS35202-31	<96906> SCREW, MACHINE		E4		2	*	*	*		*	113	
			5305-282-5956	AN526D632R16	<80044> SCREW, MACHINE		E4		2	*	*	*		*	113	
			5340-579-6359	MS28042-2	<96906> CLAMP, INSTRUMENT MOUNTING		E4		1	*	*	*		*	113	
P	O		6220-243-8138	B4755	<72914> LIGHT, PANEL		E4		1	*	*	*		REF	113	30
P	O	R	6680-659-9776	8DJ67FA81	<97424> INDICATOR, TACHOMETER		E4		1	REF	REF	REF	REF	REF	113	

(1) SOURCE, MAINT AND REC CODE (a) SOURCE CODE	(b) MAINT LEVEL	(c) REC CODE	(2) FEDERAL STOCK NUMBER	REFERENCE NUMBER	(3) DESCRIPTION	MODELS USABLE ON CH-34C	(4) UNIT OF ISSUE	(5) QTY INC IN UNIT PACK	(6) QTY INC IN UNIT	(7) 30-DAY DS GS MAINT ALW (a) 1-20	(b) 21-50	(c) 51-100	(8) 1-YR ALW PER 100 EQUIP CNTGCY	(9) DEPOT MAINT ALW PER 100 EQUIP	(10) ILLUSTRATION (a) FIG NO	(b) ITEM NO
					CONTINUED										113	
					ATTACHING PARTS											
			5305-902-1089	MS35202-31 <96906>	.SCREW,MACHINE.....		EA		2	*	*	*		*	113	
			5305-282-5956	AN526DD632R16 <88044>	.SCREW,MACHINE.....		EA		2	*	*	*		*	113	
					---*---											
				S1645-65410 <78286>	.PANEL ASSEMBLY.....		EA		1						113	31
				S1645-65412 <78286>	..STIFFENER ASSEMBLY.....		EA		1						113	
P	O		5325-505-4798	212-12 <71286>	...RECEPTACLE,TURNLOCK.....		EA		11	*	*	*		REF	113	32
					FASTENER											
P	F		1560-672-4810	S1645-65227 <78286>	...BRACKET ASSEMBLY,STIFFENER		EA		2	*	*	*		*	113	34
					ATTACHING PARTS											
				MS20470AD4 <96906>	...RIVET.....		EA		14						113	35
					---*---											
				MS20470AD4 <96906>	...RIVET.....		EA		5						113	37
					---*---											
				S1645-65213 <78286>	...CHANNEL.....		EA		1						113	38
					ATTACHING PARTS											
				MS20470AD4 <96906>	...RIVET.....		EA		16						113	39
					---*---											
AF	F			S1645-65218 <78286>	...BRACKET ASSEMBLY.....		EA		2						113	40
					ATTACHING PARTS											
				MS20470AD4 <96906>	...RIVET.....		EA		6						113	41
					---*---											
P	O	R	6605-188-9025	15700 <81100>	INDICATOR,INDUCTION,COMPASS..		EA		1	*	*	REF	REF	*	113A	
					SEE FIG.113 FOR NHA											
P	H		5340-597-4471	1604-188 <19315>	.CAP,PROTECTIVE,DUST AND.....		EA		1	*	*	*		*	113A	1
					MOISTURE SEAL											
P	H		6605-861-4002	225243-2 <81100>	.PLATE,IDENTIFICATION.....		EA		1	*	*	*		*	113A	2
P	H		6605-398-0665	215363 <81100>	.COVER,BACK.....		EA		1	*	*	*		*	113A	3
					ATTACHING PARTS											
P	H		5305-579-3399	213801S4-4 <81100>	.SCREW.....		EA		3	*	*	*		*	113A	4
			5310-058-2949	MS35337-78 <96906>	.WASHER,LOCK.....		HD		3	*	*	*		*	113A	5
					---*---											
P	H		6605-398-0666	215370 <81100>	.COVER,GEAR.....		EA		1	*	*	*		*	113A	6
					ATTACHING PARTS											
P	H		5305-033-3271	213801S3-4 <81100>	.SCREW.....		EA		3	*	*	*		*	113A	7
			5310-261-7437	AN935-3L <88044>	.WASHER,LOCK.....		HD		3	*	*	*		*	113A	8
					---*---											
P	H		5355-668-3444	107011 <81100>	.KNOB.....		EA		1	*	*	*		*	113A	9
P	H		5355-668-1912	120796 <81100>	.KNOB.....		EA		1	*	*	*		*	113A	
					ATTACHING PARTS											
P	H		5305-849-7186	228001-4-8 <81100>	.SETSCREW.....		EA		1	*	*	*		*	113A	10
					---*---											
P	H		6605-768-9615	115805 <81100>	.SHAFT AND PINION ASSEMBLY...		EA		1	*	*	*		*	113A	11
					ATTACHING PARTS											
P	H		5305-579-3399	213801S4-4 <81100>	.SCREW.....		EA		4	*	*	*		*	113A	12

(1) SOURCE, MAINT AND REC CODE (a) SOURCE CODE	(b) MAINT LEVEL	(c) REC CODE	(2) FEDERAL STOCK NUMBER	REFERENCE NUMBER	(3) DESCRIPTION	MODELS USABLE ON CH-34C	(4) UNIT OF ISSUE	(5) QTY INC IN UNIT PACK	(6) QTY INC IN UNIT	(7) 30-DAY DS G5 MAINT ALW (a) 1-20	(b) 21-50	(c) 51-100	(8) 1-YR ALWPER 100 EQUIP CNTGCY	(9) DEPOT MAINT ALWPER 100 EQUIP	(10) ILLUSTRATION (a) FIG NO	(b) ITEM NO
			5310-058-2949	MS35337-78	<96906> .WASHER,LOCK.....		HD		4	*	*	*		*	113A	13
					---*---											
P	H		5315-223-6184	218450S3-6	<81100> ..PIN,GROOVED,HEADLESS.....		EA		1	*	*	*		*	113A	14
P	H		6605-528-8334	115368	<81100> ..GEAR,SPUR.....		EA		1	*	*	*		*	113A	15
P	H		6605-662-9189	115369	<81100> ..BEARING,SLEEVE.....		EA		1	*	*	*		*	113A	16
P	H		6605-861-4006	216526-2	<81100> ..BEZEL AND COVER ASSEMBLY...		EA		1	*	*	*		*	113A	17
			5315-901-5681	MS35672-2	<96906> ..PIN,GROOVED,HEADLESS.....		EA		1	*	*	*		*	113A	18
P	H		6605-621-1343	115804	<81100> ..GEAR,SPUR.....		EA		1	*	*	*		*	113A	19
P	H		5315-217-0707	115798	<81100> ..PIN,STRAIGHT,HEADLESS.....		EA		1	*	*	*		*	113A	20
P	H		6605-308-2536	115803	<81100> .GEAR ASSEMBLY,IDLER.....		EA		1	*	*	*		*	113A	21
P	H		6605-398-0609	116077	<81100> .PINION,KNOB.....		EA		1	*	*	*		*	113A	22
P	H		6605-398-0593	115365	<81100> .PLATE ASSEMBLY,GYRO.....		EA		1	*	*	*		*	113A	23
					ATTACHING PARTS											
P	H		5305-033-3271	213801S3-4	<81100> .SCREW.....		EA		2	*	*	*		*	113A	24
			5310-261-7437	AN935-3L	<88044> .WASHER,LOCK.....		HD		2	*	*	*		*	113A	25
					---*---											
P	H		5340-969-6026	215374	<81100> .RING,RETAINING.....		EA		1	*	*	*		*	113A	26
P	H		6605-768-9665	216526-1	<81100> .BEZEL AND COVER ASSEMBLY....		EA		1	*	*	*		*	113A	
					ATTACHING PARTS											
			5310-631-1302	MS35650-44	<96906> .NUT,PLAIN,HEXAGON.....		EA		8	*	*	*		*	113A	27
			5310-058-2949	MS35337-78	<96906> .WASHER,LOCK.....		HD		8	*	*	*		*	113A	28
					---*---											
P	H		6605-662-9188	116509	<81100> ..BEARING,SLEEVE.....		EA		1	*	*	*		*	113A	29
P	H		6605-662-9182	116510	<81100> ..BEARING,SLEEVE.....		EA		1	*	*	*		*	113A	30
P	H		5315-286-8636	110758	<81100> ..PIN,STRAIGHT,HEADLESS.....		EA		2	*	*	*		*	113A	31
P	H		6605-861-4003	316075	<81100> ..BEZEL.....		EA		1	*	*	*		*	113A	32
P	H		5355-668-4493	215360	<81100> .WINDOW,DIAL.....		EA		1	*	*	*		*	113A	33
X1				315352	<81100> .MECHANISM ASSEMBLY SEE.....		EA		1						113A	34
					FIG.113A <SHEET 2 OF 3>											
					FOR BREAKDOWN											
X2	H			215698	<81100> .CASE ASSEMBLY.....		EA		1						113A	35
P	H		5305-639-6963	100314	<81100> ..SCREW,MACHINE.....		EA		4	*	*	*		*	113A	42
P	H		5315-901-5681	218450S3-4	<81100> ..PIN,GROOVED,HEADLESS.....		EA		1	*	*	*		*	113A	43
P	H		6605-310-2042	115351	<81100> ..PISTON ASSEMBLY.....		EA		1	*	*	*		*	113A	44
P	H		6605-398-0578	101867	<81100> ..COUPLING,GYRO.....		EA		1	*	*	*		*	113A	45
P	H		6605-329-0800	116078	<81100> ..SPRING,HELICAL,COMPRESSION.		EA		1	*	*	*		*	113A	46
P	H		6605-532-2185	116508	<81100> ..WASHER,FLAT.....		EA		1	*	*	*		*	113A	47
P	H		5977-056-4898	216079	<88818> ..BRUSH ASSEMBLY.....		EA		1	*	*	*		*	113A	48
					ATTACHING PARTS											
P	H		5305-537-1403	213801S2-4	<88818> ..SCREW.....		EA		2	*	*	*		*	113A	49
P	H		5310-209-4907	110401-2SS	<81100> ..WASHER,LOCK.....		EA		2	*	*	*		*	113A	50
P	H		5310-297-3339	110400-2SS	<81100> ..WASHER,FLAT.....		EA		2	*	*	*		*	113A	51
					---*---											
X1				207154	<88818> ...CAP,BRUSH HOLDER.....		EA		1						113A	52
					ATTACHING PARTS											
X1				213801S0-5	<88818> ...SCREW,MACHINE.....		EA		2						113A	53
X1				112288	<88818> ...WASHER,LOCK.....		EA		2						113A	54
					---*---											
X1				112341	<88818> ...SHIM-0.005 IN.THK.....		EA		2						113A	55
X1				108731	<88818> ...BRUSH,ELECTRICAL CONTACT..		EA		5						113A	56
X1				111998	<88818> ...HOLDER,BRUSH.....		EA		1						113A	57
X1				115234	<88818> ...BRACKET,BRUSH HOLDER.....		EA		1						113A	58

(1) SOURCE, MAINT AND REC CODE (a) SOURCE CODE	(b) MAINT LEVEL	(c) REC CODE	(2) FEDERAL STOCK NUMBER	REFERENCE NUMBER		(3) DESCRIPTION	MODELS USABLE ON CH-34C	(4) UNIT OF ISSUE	(5) QTY INC IN UNIT PACK	(6) QTY INC IN UNIT	(7) 30-DAY DS GS MAINT ALW (a) 1-20	(b) 21-50	(c) 51-100	(8) 1-YR ALW PER 100 EQUIP CNTGCY	(9) DEPOT MAINT ALW PER 100 EQUIP	(10) ILLUSTRATION (a) FIG NO	(b) ITEM NO
P	H		5305-537-1407	213801S6-7	<88818>	..SCREW.....		EA		3	*	*	*		*	113A	60
P	H		5310-660-2891	110401-6SS	<88818>	..WASHER,LOCK.....		EA		3	*	*	*		*	113A	61
			5340-803-8517	MS16625-43	<96906>	...RING,RETAINING.....		EA		1	*	*	*		*	113A	62
X1				105170-1	<88818>	...WASHER,THRUST-0.015 IN.THK		EA		AR						113A	63
X1				105170-2	<88818>	...WASHER,THRUST-0.017 IN.THK		EA		AR						113A	
X1				105170-3	<88818>	...WASHER,THRUST-0.019 IN.THK		EA		AR						113A	
X1				105170-4	<88818>	...WASHER,THRUST-0.021 IN.THK		EA		AR						113A	
X1				218451S3-3 1-2	<88818>	...PIN,GROOVED,HEADLESS.....		EA		1						113A	64
X1				120578-2	<88818>	...CRANK,INNER.....		EA		1						113A	65
			5315-223-6184	MS35672-3	<96906>	...PIN,GROOVED,HEADLESS.....		EA		1	*	*	*		*	113A	66
P	H		6605-528-1495	101641	<81100>	...GEAR,SPUR.....		EA		1	*	*	*		*	113A	67
P	H		5310-512-5622	101658	<88818>	...WASHER,STEEL.....		EA		1	*	*	*		*	113A	68
X1				101828	<88818>	...TUBE,COPPER.....		EA		1						113A	69
P	H		5990-564-9442	315613	<88818>	.SYNCHRO,RECEIVER SEE..... FIG.113A <SHEET 3 OF 3> FOR BREAKDOWN		EA		1	*	*	*		*	113A	71
						ATTACHING PARTS											
X1				105470	<81100>	..NUT,PLAIN,ROUND.....		EA		3						113A	72
						---*---											
P	H		6605-565-9880	215809	<88818>	..GEAR,SPUR.....		EA		1	*	*	*		*	113A	73
P	H		5310-141-3229	117810	<88818>	..WASHER,SPRING TENSION.....		EA		1	*	*	*		*	113A	74
				309737	<81100>	..BLOCK ASSEMBLY,BRUSH.....		EA		1						113A	76
						ATTACHING PARTS											
				108704	<81100>	..NUT,PLAIN,ROUND.....		EA		3						113A	77
						---*---											
P	H		5977-322-2839	107880-1	<81100>	...BRUSH HOLDER ASSEMBLY.....		EA		1	*	*	*		*	113A	78
P	H		5977-322-2840	107880-2	<81100>	...BRUSH HOLDER ASSEMBLY.....		EA		1	*	*	*		*	113A	79
						ATTACHING PARTS											
X1				105470	<81100>	...NUT,PLAIN,ROUND.....		EA		4						113A	80
X1				107117	<81100>	...BALL,TEE HEAD.....		EA		2						113A	81
						---*---											
				210588-3	<81100>	...BLOCK,BRUSH.....		EA		1						113A	82
				209804	<81100>	..CLAMP AND PLATE ASSEMBLY....		EA		1						113A	83
				107167	<81100>	..SCREW,MACHINE.....		EA		3						113A	84
P	H		5310-530-9362	102737	<81100>	..WASHER,TORQUEMETER.....		EA		3	*	*	*		*	113A	85
				109849	<81100>	..INSULATOR,DISK.....		EA		1						113A	86
X1				112953	<81100>	..CAP,REAR.....		EA		1						113A	87
				B2-50B1SP6	<81100>	..BEARING,BALL,ANNULAR.....		EA		1						113A	88
				207598-2	<81100>	..ROTOR,SYNCHRO.....		EA		1						113A	89
				207597-6	<81100>	..STATOR,SYNCHRO.....		EA		1						113A	90
P	H		5330-286-0389	109745	<81100>	..WASHER,NONMETALLIC.....		EA		1	*	*	*		*	113A	91
P	H		6620-332-1627	109743	<81100>	..RING ASSEMBLY,LOCATING.....		EA		1	*	*	*		*	113A	92
P	H		6620-675-2240	107583	<81100>	..RETAINER.....		EA		1	*	*	*		*	113A	93
				B2-50B1SP6	<81100>	..BEARING,BALL,ANNULAR.....		EA		1						113A	94
				309742	<81100>	..CAP,FRONT.....		EA		1						113A	95

(1) SOURCE, MAINT AND REC CODE (a) SOURCE CODE	(b) MAINT LEVEL	(c) REC CODE	(2) FEDERAL STOCK NUMBER	REFERENCE NUMBER		(3) DESCRIPTION	MODELS USABLE ON CH-34C	(4) UNIT OF ISSUE	(5) QTY INC IN UNIT PACK	(6) QTY INC IN UNIT	(7) 30-DAY DS GS MAINT ALW (a) 1-20	(b) 21-50	(c) 51-100	(8) 1-YR ALWPER 100 EQUIP CNTGCY	(9) DEPOT MAINT ALWPER 100 EQUIP	(10) ILLUSTRATION (a) FIG NO	(b) ITEM NO
P	O	R	6680-526-5078	162-0251-873	<83296>	INDICATOR,LIQUID QUANTITY.... SEE FIG.113 FOR NHA		EA		1	REF	REF	REF	REF	*	113B	
P	H		5960-556-9685	1216-10-1	<83296>	.SHIELD,ELECTRON TUBE.....		EA		2	*	*	*		*	113B	1
P	H		5960-262-0132	6111	<81349>	.ELECTRON TUBE.....		EA		1	*	*	*		*	113B	2
P	H		5960-280-5585	6112	<81349>	.ELECTRON TUBE.....		EA		1	*	*	*		*	113B	3
			6695-855-8564	MS28055-11	<96906>	.BEZEL,INSTRUMENT MOUNTING... ATTACHING PARTS		EA		1	*	*	*		*	113B	4
			5305-282-4045	MS35267-2	<96906>	.SCREW,MACHINE..... ---*---		HD		4	*	*	*		*	113B	5
			6695-624-9541	MS28055-2	<96906>	.FLANGE,BEZEL MOUNTING.....		EA		1	*	*	*		*	113B	6
X2	H			162-2116-873	<83296>	.MECHANISM ASSEMBLY SEE..... FIG.113B <SHEET 2 OF 5> FOR BREAKDOWN		EA		1						113B	7
P	H		6680-564-9265	162-2118-344	<83296>	.HOUSING ASSEMBLY.....		EA		1	*	*	*		*	113B	8
P	H		6680-527-3546	15-69	<83296>	.PLATE IDENTIFICATION.....		EA		1	*	*	*		*	113B	9
P	H		9905-712-0544	162-2099	<97485>	.PLATE IDENTIFICATION.....		EA		1	*	*	*		*	113B	10
P	H		5355-668-5925	162-173	<83296>	..POINTER ASSEMBLY.....		EA		1	*	*	*		*	113B	11
P	H		6680-646-5378	162-114-873	<83296>	..DIAL,SCALE..... ATTACHING PARTS		EA		1	*	*	2		*	113B	12
P	H		5305-373-8999	162-90	<83296>	..SCREW,MACHINE..... ---*---		EA		2	*	*	*		*	113B	13
P	H		6685-026-0370	162-338	<83296>	..SPACER,PLATE.....		EA		1	*	*	*		*	113B	14
X2	H			162-1923-873	<83296>	..BACKPLATE SECTION..... ASSEMBLY SEE FIG.113B <SHEET 3 OF 5> FOR BREAKDOWN ATTACHING PARTS		EA		1						113B	15
			5310-176-8125	AN340-2	<88044>	..NUT,PLAIN,HEXAGON.....		GR		3	*	*	*		*	113B	16
			5310-515-8000	MS35337-39	<96906>	..WASHER,LOCK..... ---*---		HD		3	*	*	*		*	113B	17
X2	H			162-2106	<83296>	..BULKHEAD SECTION ASSEMBLY.. SEE FIG.113B <SHEET 4 OF 5> FOR BREAKDOWN ATTACHING PARTS		EA		1						113B	18
P	H		5330-712-6092	162-1918	<97485>	..SPACER,THREADED..... ---*---		EA		3	*	*	*		*	113B	19
P	H		6680-564-9264	162-2102	<83296>	..POST,INDICATOR.....		EA		3	*	*	*		*	113B	20
P	H		6680-976-9371	162-2098	<83296>	..PLATE..... ATTACHING PARTS		EA		1	*	*	*		*	113B	21
			5310-013-4524	MS35649-42	<96906>	..NUT,PLAIN,HEXAGON.....		HD		2	*	*	*		*	113B	23
			5310-551-7770	MS35337-40	<96906>	..WASHER,LOCK.....		EA		2	*	*	*		*	113B	24
			5310-950-1310	MS27183-4	<96906>	..WASHER,FLAT.....		HD		2	*	*	*		*	113B	25

(1) SOURCE, MAINT AND REC CODE (a) SOURCE CODE	(b) MAINT LEVEL	(c) REC CODE	(2) FEDERAL STOCK NUMBER	REFERENCE NUMBER	(3) DESCRIPTION	MODELS USABLE ON CH-34C	(4) UNIT OF ISSUE	(5) QTY INC IN UNIT PACK	(6) QTY INC IN UNIT	7 30-DAY MAINT ALW (a) 1-20	(b) 21-50	(c) 51-100	8 1-20 ALW PER 100 EQUIP CNTGCY	9 SPARE MAINT ALW PER 100 EQUIP	10 ILLUSTRATION (a) FIG NO	(b) ITEM NO
					CONTINUED										1128	25
					---*---											
P	H		5950-519-4726	1106-21 <83296>	..TRANSFORMER.....		EA		1	*	*	*		*	1138	26
P	H		5950-566-6737	162-2097 <83296>	..HOLDER TRANSFORMER.....		EA		1	*	*	*		*	1138	27
					ATTACHING PARTS											
			5305-957-1499	MS35190-213 <96906>	..SCREW,MACHINE.....		EA		3	*	*	*		*	1138	28
					---*---											
P	H		6680-618-6477	162-2101 <97485>	..SPACER.....		EA		3	*	*	*	2	*	1138	29
X2	H			162-1939 <83296>	..CONTROL ASSEMBLY SEE.....		EA		1						1138	30
					FIG.1138 <SHEET 5 OF 8>											
					FOR BREAKDOWN											
P	H		5910-977-1086	DD202 <71590>	...CAPACITOR.....		EA		1	*	*	*		*	1138	31
P	H		5910-060-9619	CM15F511J03 <81349>	...CAPACITOR,FIXED MICA.....		EA		1	*	*	2		*	1138	32
P	H		5905-279-1890	RC20GF391J <81349>	...RESISTOR,FIXED,COMPOSITION		EA		1	*	*	*		*	1138	33
P	H		6680-532-2448	162-1924 <83296>	...BULKHEAD ASSEMBLY.....		EA		1	*	*	*		*	1138	34
P	H		5970-503-3224	164-158 <83296>	...INSULATOR PLATE.....		EA		2	*	*	*		*	1138	36
P	H		6680-977-1070	10409 <97485>	...COUPLATE,TRIODE.....		EA		2	*	*	*		*	1138	37
			5905-171-1999	MS35043-203 <96906>	...RESISTOR,FIXED COMPOSITION		EA		1	*	*	*		*	1138	38
					ATTACHING PARTS											
			5310-616-6947	MS35649-25 <96906>	...NUT,PLAIN,HEXAGON.....		GR		1	*	*	*		*	1138	39
			5310-515-8000	MS35337-39 <96906>	...WASHER,LOCK.....		HD		3	*	*	*		*	1138	40
					---*---											
			5905-171-1999	MS35043-203 <96906>	...RESISTOR,FIXED,COMPOSITION		EA		1	*	*	*		*	1138	41
P	H		5905-279-3504	RC20GF472J <81349>	...RESISTOR,FIXED,COMPOSITION		EA		1	*	*	*		*	1138	42
P	H		5910-060-9619	CM15F511J03 <81349>	...CAPACITOR,FIXED MICA.....		EA		1	*	*	REF		*	1138	43
			5905-279-3838	MS35043-226 <96906>	...RESISTOR,FIXED,COMPOSITION		EA		1	*	*	*		*	1138	44
P	H		6680-564-9257	162-1901 <83296>	...CLAMP.....		EA		1	*	*	*	2	*	1138	45
					ATTACHING PARTS											
P	H		5305-530-9503	162-363 <83296>	...SCREW,MACHINE.....		EA		1	*	*	*		*	1138	46
					---*---											
P	H		6680-529-7882	162-1905 <83296>	...BUSHING.....		EA		1	*	*	2		*	1138	48
P	H		6680-976-9373	162-1904 <83296>	...LEVER.....		EA		1	*	*	2		*	1138	49
					ATTACHING PARTS											
P	H		6680-554-9256	162-1899 <83296>	...SCREW,SPECIAL ZERO.....		EA		1	*	*	*		*	1138	50
					ADJUSTMENT											
					---*---											
P	H		5315-225-5173	800 <83296>	...PIN.....		EA		1	*	*	*		*	1138	51
			5940-230-0515	MS25036-54 <96906>	...TERMINAL,LUG.....		EA		1	*	*	*		*	1138	52
P	H		5905-502-5821	1102-92-501 <83296>	...RESISTOR.....		EA		1	*	*	*		*	1138	53
X2	H			162-1913 <97485>	...BACKPLATE ASSEMBLY.....		EA		1						1138	54
P	H		6680-976-9374	1206-17-1 <83296>	....SOCKET,TUBE.....		EA		2	*	*	*		*	1138	55
P	H		5940-518-8532	163-427 <83296>	....TERMINAL,FEED THRU.....		VX		1	*	*	*		*	1138	56
					INSULATED											
P	H		5970-518-3270	163-418 <97485>	....INSULATOR,BUSHING.....		EA		1	*	*	*		*	1138	57
P	H		5935-539-0877	1217-8-1 <83296>	....CONNECTOR.....		EA		1	*	*	*		*	1138	58
P	H		6680-532-2446	162-1903 <83296>	....SCREW,ADJUSTING INDICATOR		EA		1	*	*	*		*	1138	60
P	H		6680-564-9259	162-1910 <97485>	....BELLOWS SUBASSEMBLY.....		EA		1	*	*	*		*	1138	61
P	H		6680-564-9260	162-1912 <83296>	....BRACKET.....		EA		1	*	*	*		*	1138	62
P	H		6685-211-9084	162-574 <83296>	....CUP,EXHAUST ASSEMBLY.....		EA		1	*	*	*		*	1138	64
P	H		6680-564-9258	162-1909 <83296>	....BACKPLATE SUBASSEMBLY.....		EA		1	*	*	*		*	1138	65
P	H		5910-977-1085	PP28100C2 <21520>	...CAPACITOR.....		EA		2	*	*	*		*	1138	69

(1) SOURCE, MAINT AND REC CODE (a) SOURCE CODE	(b) MAINT LEVEL	(c) REC CODE	(2) FEDERAL STOCK NUMBER	REFERENCE NUMBER	(3) DESCRIPTION	MODELS USABLE ON CH-34C	(4) UNIT OF ISSUE	(5) QTY INC IN UNIT PACK	(6) QTY INC IN UNIT	(7) 30-DAY LS/GS MAINT ALW (a) 1-20	(b) 21-50	(c) 51-100	(8) 1-YR ALW PER 100 EQUIP CNTGCY	(9) DEPOT MAINT ALW PER 100 EQUIP	(10) ILLUSTRATION (a) FIG NO	(b) ITEM NO
P	H		6680-532-2452	162-2105	<83296> ...BULKHEAD ASSEMBLY,.....		EA		1	*	*	*		*	113B	70
					INDICATOR											
P	H		5940-271-4032	352	<86577> ....TERMINAL,STUD.....		EA		11	*	*	*		*	113B	73
P	H		6680-976-9370	162-2104	<83296> ....BULKHEAD,FRONT.....		EA		1	*	*	*		*	113B	74
P	H		6680-564-9263	162-2091	<83296> ...SPACER.....		EA		3	*	*	*		*	113B	75
P	H		5950-519-8817	1106-22	<83296> ...TRANSFORMER,POWER STEPDOWN		EA		1	*	*	*		*	113B	76
					ATTACHING PARTS											
			5305-290-3003	AN515UB2-4	<88044> ...SCREW,MACHINE.....		GR		2	*	*	*		*	113B	77
P	H		6680-976-9375	162-2171	<83296> ...BRACKET.....		EA		1	*	*	*		*	113B	78
					---*---											
			5905-192-0667	MS35043-143	<96906> ...RESISTOR,FIXED COMPOSITION		EA		1	*	*	*		*	113B	79
P	H		5910-681-9356	PP4B60A1	<21520> ...CAPACITOR,FIXED.....		EA		2	*	*	*		*	113B	80
P	H		5910-977-1079	CM15E161J	<83296> ...CAPACITOR.....		EA		1	*	*	*		*	113B	81
P	H		5905-171-2006	RC20GF271J	<81349> ...RESISTOR,FIXED COMPOSITION		EA		1	*	*	*		*	113B	82
P	H		5905-279-2515	RC20GF474J	<81349> ...RESISTOR,FIXED COMPOSITION		EA		1	*	9	19		*	113B	83
P	H		5905-195-6761	RC20GF104J	<81349> ...RESISTOR,FIXED,COMPOSITION		EA		3	*	*	*		*	113B	85
P	H		5910-977-1087	CP04A1KB333K	<83296> ...CAPACITOR.....		EA		1	*	*	*		*	113B	86
P	H		5905-081-6137	MIL26RW69V5R1	<81349> ...RESISTOR,FIXED WIRE WOUND.		EA		1	*	*	*		*	113B	87
P	H		5905-279-2662	RC32GF362J	<81349> ...RESISTOR,FIXED COMPOSITION		EA		1	*	*	*		*	113B	88
P	H		5905-190-8889	RC20GF101J	<14028> ...RESISTOR,FIXED COMPOSITION		EA		1	*	*	*		*	113B	89
P	H		5910-615-0328	PP1-75B125C2	<21520> ...CAPACITOR,FIXED.....		EA		1	*	*	*		*	113B	90
					ELECTROLYTIC											
P	H		6680-976-9376	162-2103	<83296> ...BULKHEAD ASSEMBLY.....		EA		1	*	*	*		*	113B	91
P	H		6130-519-2608	1117-4-2	<83296> ....RECTIFIER.....		EA		1	*	*	*		*	113B	92
					ATTACHING PARTS											
			5305-151-2081	AN507-440R6	<88044> ....SCREW,MACHINE.....		EA		2	*	*	*		*	113B	93
P	H		5307-980-9582	162-2126	<83296> ....STUD.....		EA		1	*	*	*		*	113B	94
					---*---											
P	H		6680-976-9378	162-2095	<83296> ....BRACKET.....		EA		1	*	*	*		*	113B	95
P	H		6680-976-9377	162-2096	<83296> ....PLATE.....		EA		1	*	*	*		*	113B	97
P	H		5940-271-4032	352	<83296> ....TERMINAL,STUD.....		EA		11	*	*	*		*	113B	99
P	H		6680-976-9379	162-2093	<83296> ....BULKHEAD,REAR.....		EA		1	*	*	*		*	113B	100
P	H		6680-532-2457	162-2125	<83296> ...MOTOR AND GEAR ASSEMBLY...		EA		1	*	*	*		*	113B	101
					ATTACHING PARTS											
			5310-261-7437	AN935-3L	<88044> ...WASHER,LOCK.....		HD		1	*	*	*		*	113B	103
					---*---											
P	H		6680-528-4692	162-1455	<97485> ....PINION,INDICATOR.....		EA		1	*	*	*		*	113B	104
P	H		6105-960-4078	2ET123M0D10	<77045> ....MOTOR.....		EA		1	*	*	*		*	113B	105
P	H		6680-976-9381	162-1937	<83296> ...HOLDER ASSEMBLY,DIAL.....		EA		1	*	*	*		*	113B	106
P	H		6680-532-2449	162-1928	<83296> ...WIPER ASSEMBLY.....		EA		1	*	*	*		*	113B	108
					ATTACHING PARTS											
			5305-604-2599	AN565D2H2	<88044> ...SETSCREW.....		EA		1	*	*	*		*	113B	109
					---*---											
P	H		6680-564-9262	162-1932	<83296> ...DRIVE ASSEMBLY.....		EA		1	*	*	*		*	113B	110
					ATTACHING PARTS											
			5310-515-8000	MS35337-39	<96906> ...WASHER,LOCK.....		HD		3	*	*	*		*	113B	112
					---*---											
P	H		6680-977-1072	162-1935	<83296> ....PLATE.....		EA		1	*	*	*		*	113B	113
					ATTACHING PARTS											
			5305-088-1939	AN505PB2-11	<88044> ....SCREW,MACHINE.....		GR		1	*	*	*		*	113B	114
					---*---											
P	H		6680-333-9640	162-1082	<97485> ....SPACER,GEAR.....		EA		1	*	*	*		*	113B	115

(1) SOURCE, MAINT AND REC CODE (a) SOURCE CODE	(b) MAINT LEVEL	(c) REC CODE	(2) FEDERAL STOCK NUMBER	REFERENCE NUMBER	(3) DESCRIPTION	MODELS USABLE ON CH-34C	(4) UNIT OF ISSUE	(5) QTY INC IN UNIT PACK	(6) QTY INC IN UNIT	(7) 30-DAY DS GS MAINT ALW (a) 1-20	(b) 21 50	(c) 51 100	(8) 1-YR ALWPER 100 EQUIP CNTGCY	(9) DEPOT MAINT ALWPER 100 EQUIP	(10) ILLUSTRATION (a) FIG NO	(b) ITEM NO
P	H		6680-662-9530	162-1021	<97485> ....BEARING,SLEEVE.....		EA		1	*	*	*		*	113B	116
P	H		6680-026-0283	162-1023	<83296> ....GEAR ASSEMBLY.....		EA		1	*	*	*		*	113B	117
P	H		6680-026-0287	162-1083	<83296> ....GEAR ASSEMBLY.....		EA		1	*	*	*		*	113B	118
P	H		6685-216-6548	162-321	<83296> ....GEAR ASSEMBLY.....		EA		4	*	*	*		*	113B	119
P	H		6680-662-9526	162-330	<97485> ....SPACER,SLEEVE.....		EA		1	*	*	*		*	113B	120
P	H		6680-976-9382	162-1933	<83296> ....SHAFT ASSEMBLY.....		EA		1	*	*	*		*	113B	121
X2	H			162-1931	<83296> ....PLATE ASSEMBLY.....		EA		1						113B	122
P	H		6680-976-9384	162-1930	<83296> .....SHAFT.....		EA		2	*	*	*		*	113B	123
P	H		6680-977-5724	162-1929	<83296> .....PLATE,FRONT.....		EA		1	*	*	*		*	113B	124
P	H		6680-976-9380	162-2092	<83296> ....COVER,DRIVE ASSEMBLY.....		EA		1	*	*	*		*	113B	125
P	H		5905-572-9167	162-1869	<83296> ....RESISTOR.....		EA		1	*	*	*		*	113B	126
P	O	R	6620-561-5646	AW3-10A	<61349> GAGE,ABSOLUTE PRESSURE,DIAL.. INDICATING SEE FIG.113 FOR NHA		EA		1						113C	
P	H		5305-638-2399	AH1201-0	<61349> .SCREW,MACHINE.....		EA		4	*	*	*		*	113C	1
P	H		6620-347-8946	ANN1414A	<61349> .CASE ASSEMBLY,GAGE,PRESSURE.		EA		1	*	*	*		*	113C	2
X2	H			BH3646D	<61349> .PLATE,MOUNTING.....		EA		1						113C	3
P	H		5355-667-7455	AP272E	<61349> .POINTER,DIAL.....		EA		1	*	*	*		*	113C	4
P	H		5305-096-1614	AH3217A	<61349> .SCREW.....		EA		2	*	*	*		4	113C	5
P	H		6620-505-3906	AD18902	<61349> .DIAL,SCALE.....		EA		1	*	*	*		*	113C	6
P	H		5305-096-1636	AH940H	<61349> .SCREW,MACHINE.....		EA		4	*	*	*		*	113C	7
P	H		6620-509-7934	BM2828	<61349> .MOVEMENT ASSEMBLY.....		EA		1	*	*	*		*	113C	8
X1				AH2835F	<61349> ..SETSCREW.....		EA		1						113C	9
X1				AH2847AD	<61349> ..ARM,ROCKER.....		EA		1						113C	10
X1				AH155J	<61349> ..SCREW.....		EA		3						113C	11
X1				AE657A	<61349> ..TOP PLATE ASSEMBLY.....		EA		1						113C	12
P	H		5305-637-6678	AH155W	<61349> ..SCREW,MACHINE.....		EA		1	*	*	*		*	113C	13
P	H		5305-337-5581	AH3847	<61349> ..LOCK SCREW,MAIN PRESSURE...		EA		1	*	*	*		*	113C	14
P	H		6620-979-3753	ANN1118M	<61349> ..SEGMENT AND ARBOR..... SUBASSEMBLY		EA		1	*	*	*		*	113C	15
X1				AH155R	<61349> ..SCREW,MACHINE.....		EA		1						113C	16
X1				AH3736A	<61349> ..WIRE,SCREW,LOCKING.....		EA		1						113C	17
X1				AH3830	<61349> ..NUT.....		EA		1						113C	18
X1				AH3285	<61349> ..WASHER,FLAT.....		EA		1						113C	19
X1				AH3829	<61349> ..SCREW,ADJUSTING.....		EA		1						113C	20
P	H		6620-049-6416	AU283H	<61349> ..HAIRSPRING.....		EA		1	*	*	*		*	113C	21
X1				AH216U	<61349> ..SPACER.....		EA		1						113C	22
X1				AH1508W	<61349> ..DISK,DAMPING.....		EA		1						113C	23
X1				AE659	<61349> ..PINION.....		EA		1						113C	24
X1				AE658A	<61349> ..BOTTOM PLATE ASSEMBLY.....		EA		1						113C	25
			5305-151-0651	AN501B3-4	<88044> .SCREW,MACHINE.....		EA		6	*	*	*		*	113C	26
P	H		5305-443-7508	AH3835	<61349> .SCREW,MACHINE.....		EA		1	*	*	*		*	113C	27
P	H		5330-049-6380	AH2025GY	<61349> .WASHER,NONMETALLIC.....		EA		1	*	*	*		*	113C	28
P	H		6620-695-2288	ANN1068BE	<61349> .DIAPHRAGM ASSEMBLY,GAGE.....		EA		1	*	*	*		*	113C	29
P	H		6620-699-0726	ANN1068BD	<61349> .DIAPHRAGM ASSEMBLY,GAGE.....		EA		1	*	*	*		*	113C	30
P	H		6620-443-7502	AH3796	<61349> .LOCKNUT.....		EA		2	*	*	*		*	113C	31

(1) SOURCE, MAINT AND REC CODE (a) SOURCE	(b) MAINT	(c) REC	(2) FEDERAL STOCK NUMBER	REFERENCE NUMBER	(3) DESCRIPTION	MODELS USABLE ON CH-34C	(4) UNIT OF ISSUE	(5) QTY INC IN UNIT PACK	(6) QTY INC IN UNIT	(7) 30-DAY DS GS MAINT. LA (a) 1-20	(b) 21-50	(c) 51-100	(8) 1 YR ALW PER 100 EQUIP CAT CY	(9) DEPOT MAINT ALW PER 100 EQUIP	(10) ILLUSTRATION (a) FIG NO	(b) ITEM NO
P	H		5305-207-9737	AH483AB	<61349> .SETSCREW.....		EA		1	*	*	*		*	113C	32
P	H		6620-332-1620	ANN10928	<61349> .COLLAR ASSEMBLY,FUEL..... PRESSURE		EA		1	*	*	*		*	113C	33
P	H		6620-443-7502	AH3796	<61349> .LOCKNUT.....		EA		1	*	*	*		*	113C	34
P	H		5305-525-6002	AH2835Y	<61349> .SCREW,MACHINE.....		EA		1	*	*	*		*	113C	35
P	H		6620-261-2915	AH2025GX	<61349> .GASKET.....		EA		1	*	*	*		*	113C	36
P	H		5305-508-9728	AH3850A	<61349> .SETSCREW.....		EA		1	*	*	*		*	113C	37
P	H		5330-390-7650	AH2025HC	<61349> .WASHER,NONMETALLIC.....		EA		1	*	*	*		*	113C	38
P	H		5305-545-5703	AH98AZ	<61349> .SCREW,SHOULDER.....		EA		4	*	*	*			113C	39
P	H		6620-509-7932	AH4506	<61349> .SPACER,PLATE.....		EA		1	*	*	*			113C	40
P	H		5330-641-8494	AH2025MY	<61349> .PACKING,PREFORMED.....		EA		1	*	*	*			113C	41
P	H		5320-119-6862	AH219D	<61349> .RIVET,SOLID.....		EA		2	*	*	*		*	113C	42
P	H		6620-979-3756	NP23	<61349> .NAMEPLATE.....		EA		1	*	*	*			113C	43
P	H		5305-049-6384	AH2833C	<61349> .SETSCREW.....		EA		1	*	*	*			113C	44
P	H		1650-343-5605	AH4072	<61349> .PLUG,VENT.....		EA		1	*	*	*			113C	45
		R	6610-388-0048	14602-1JA1	<19315> INDICATOR,ATTITUDE SEE..... FIG.113 & 114 FOR NHA		EA		1						113E	
		R	6610-388-0049	14602-1JB2	<19315> INDICATOR,ATTITUDE SEE..... FIG.113 & 114 FOR NHA		EA		1						113E	
		R	6610-390-6441	14602-1JC1	<19315> INDICATOR,ATTITUDE SEE..... FIG.113 & 114 FOR NHA		EA		1						113E	
		R	6610-663-8798	14602-1JD1	<19315> INDICATOR,ATTITUDE SEE..... FIG.113 & 114 FOR NHA		EA		1						113E	
P	O	R	6610-526-4717	14602-1JE1	<19315> INDICATOR,ATTITUDE SEE..... FIG.113 & 114 FOR NHA		EA		1						113E	
P	O	R	6610-663-8800	14602-1JF1	<19315> INDICATOR,ATTITUDE SEE..... FIG.113 & 114 FOR NHA		EA		1						113E	
		R	6610-526-6765	14613-1AK4	<19315> INDICATOR,ATTITUDE SEE..... FIG.113 & 114 FOR NHA		EA		1						113E	
P	H		5340-329-0377	729685-1	<19315> .CLIP,CAGING,VERTICAL GYRO...		EA		1	*	2	2		*	113E	1
P	H		6620-754-5946	712700	<19315> .PLATE,REINFORCING..... NOTE 1,2,3,4,5,& 7		EA		1	*	*	*		*	113E	2
P	H		6610-567-5966	1243071-1	<19315> .PLATE,REINFORCING.....NOTE 6 ATTACHING PARTS		EA		1	*	*	*		*	113E	
P	H		5305-685-6867	232-405SS	<19315> .SCREW,MACHINE..... NOTE 1,2,3,4,5,& 7		EA		9	*	*	*		*	113E	3
P	H		5305-215-6297	230-405SS	<88917> .SCREW,MACHINE.....NOTE 6		EA		7	*	*	*		*	113E	
P	H		5305-685-6867	232-405SS	<19315> .SCREW,MACHINE.....NOTE 6		EA		2	*	*	*		*	113E	4
P	H		5310-754-4606	530-4SS	<19315> .WASHER,LOCK..... ----*----		EA		9	*	*	*		*	113E	5
P	H		5340-205-6965	1604-178	<65301> .CAP,SHIPPING..... NOTE 1,2,3,4,5,& 7		EA		1	*	*	*		*	113E	5
P	H		5340-616-4796	1219270-12	<19315> .CAP,SHIPPING.....NOTE 6		EA		1	*	*	*		*	113E	7
X2	H			766697-1	<19315> .COVER.....		EA		1						113E	8
P	H		6610-329-0370	711709-1	<19315> .GASKET.....		EA		1	*	2	2		*	113E	9
P	H		6610-986-0418	766695-7	<19315> .PLATE,IDENTIFICATION.....		EA		1	*	*	*		*	113E	10

(1) SOURCE, MAINT AND REC CODE (a) SOURCE CODE	(b) MAINT LEVEL	(c) REC CODE	(2) FEDERAL STOCK NUMBER	REFERENCE NUMBER		(3) DESCRIPTION	MODELS USABLE ON CH-34C	(4) UNIT OF ISSUE	(5) QTY INC IN UNIT PACK	(6) QTY INC IN UNIT	(7) 30-DAY DS GS MAINT ALW (a) 1-20	(b) 21-50	(c) 51-100	(8) 1-YR ALW PER 100 EQUIP CNTGCY	(9) DEPOT MAINT ALW PER 100 EQUIP	(10) ILLUSTRATION (a) FIG NO	(b) ITEM NO
						CONTINUED										113E	10
						NOTE 1,2,3,4,5,& 6											
						ATTACHING PARTS											
P	H		5320-979-7618	211-301ABA	<19315>	.RIVET,TUBULAR.....		EA		2	*	*	*		*	113E	11
						NOTE 1,2,3,4,5,& 6											
						---*---											
			5935-726-0708	MS3102R10SL3P	<96906>	.CONNECTOR,RECEPTACLE.....		EA		1	*	*	*		*	113E	12
						ATTACHING PARTS											
P	H		5305-090-0571	232-405-1-2SS	<19315>	.SCREW,MACHINE.....		EA		4	*	*	*		*	113E	13
						NOTE 1,2,3,4,5,& 7											
P	H		5305-207-5083	230-405-1-2SS	<19315>	.SCREW,MACHINE.....NOTE 6		EA		3	*	*	*		*	113E	
P	H		5305-090-0571	232-405-1-2SS	<19315>	.SCREW,MACHINE.....NOTE 6		EA		1	*	*	*		*	113E	14
P	H		5310-754-4606	530-4SS	<19315>	.WASHER,LOCK.....		EA		4	*	*	*		*	113E	15
						NOTE 1,2,3,4,5,& 7											
						---*---											
P	H		6610-096-0110	PB26064-1	<19315>	.GASKET.....		EA		2	*	*	*		*	113E	16
P	H		6610-986-0425	713113-1	<19315>	.PLATE,COVER.....		EA		1	*	*	*		*	113E	17
						NOTE 1,2,3,4,& 5											
P	H		6610-918-1698	729004-1	<19315>	.PLATE,COVER.....NOTE 6		EA		1	*	*	*		*	113E	
P	H		6610-918-1698	729004-1	<19315>	..PLATE,COVER.....		EA		1	*	*	*		*	113E	19
						NOTE 1,2,3,4,5,& 6											
P	H		6610-329-0370	711709-1	<19315>	.GASKET.....		EA		1	*	REF	REF		*	113E	20
P	H		5355-096-1429	766682-1	<19315>	.KNOB.....NOTE 1,2,3,4,& 5		EA		1	*	*	*		*	113E	21
P	H		5355-519-9298	1240983-1	<19315>	.KNOB.....NOTE 6		EA		1	*	*	*		*	113E	
P	H		5315-570-5371	178-479-228	<19315>	..PIN,STRAIGHT,HEADLESS.....		EA		1	*	*	*		*	113E	23
						NOTE 7											
P	H		5355-567-5956	1222707-1	<19315>	..KNOB.....NOTE 7		EA		1	*	*	*		*	113E	25
P	H		6610-096-1380	730456-1	<19315>	.SHIM.....NOTE 1,2,3,4,& 5		EA		AR	*	*	*		*	113E	26
P	H		6615-096-1381	730456-2	<19315>	.SHIM.....NOTE 1,2,3,4,& 5		EA		AR	*	*	2		*	113E	
P	H		6610-544-3185	1217284-1	<19315>	.WASHER ASSEMBLY.....NOTE 7		EA		1	*	*	*		*	113E	27
P	H		6610-600-1761	1217283-1	<19315>	.WASHER,STOP.....NOTE 6,& 7		EA		1	*	*	2		*	113E	28
P	H		6610-586-6373	717449-1	<19315>	.KNOB AND SHAFT ASSEMBLY.....		EA		1	*	*	*		*	113E	
						ATTACHING PARTS											
P	H		5310-095-9977	PB23264-1	<19315>	.NUT,PLAIN,HEXAGON.....		EA		2	*	*	*		*	113E	29
						---*---											
X1				766684-1	<19315>	..KNOB.....		EA		1						113E	30
						ATTACHING PARTS											
P	H		5315-890-0048	209-62-375SS	<19315>	..PIN.....NOTE 1,2,3,4,& 7		EA		1	*	*	*		*	113E	31
P	H		5315-913-2348	179-625-308	<19315>	..PIN,STRAIGHT,HEADLESS-NO...		EA		1	*	*	*		*	113E	
						0.0625,0.30 IN.LG NOTE 6											
						---*---											
X1				766689-1	<19315>	..PIN,SHOULDER,HEADLESS.....		EA		1						113E	32
			5330-242-6637	AN123860	<88044>	.PACKING,PREFORMED.....		EA		1	*	*	*		*	113E	33
						NOTE 1,2,3,4,5,& 7											
P	H		6610-527-8227	1242419-1	<19315>	.PACKING,PREFORMED.....NOTE 6		EA		1	*	*	*		*	113E	
X2	H			782219-1	<19315>	.BEZEL ASSEMBLY....NOTE 1,& 2		EA		1						113E	
X2	H		6610-525-5902	730995-1	<19315>	.BEZEL ASSEMBLY..NOTE 3,4,& 5		EA		1	*	*	*		*	113E	
X2	H			1225370-1	<19315>	.BEZEL ASSEMBLY.....NOTE 7		EA		1						113E	
						ATTACHING PARTS											
P	H		5305-655-7450	240-305SSBE	<19315>	.SCREW,MACHINE.....		EA		8	*	*	*		*	113E	34
P	H		5305-808-1534	240-305-1-2SSBE	<19315>	.SCREW,MACHINE.....NOTE 7		EA		8	*	*	*		*	113E	
P	H		5305-808-1994	240-306SSBE	<19315>	.SCREW,MACHINE.....NOTE 7		EA		8	*	*	*		*	113E	

(1) SOURCE, MAINT AND REC CODE (a) SOURCE CODE	(b) MAINT LEVEL	(c) REC CODE	(2) FEDERAL STOCK NUMBER	REFERENCE NUMBER	(3) DESCRIPTION	MODELS USABLE ON CH-34C	(4) UNIT OF ISSUE	(5) QTY INC IN UNIT PACK	(6) QTY INC IN UNIT	30-DAY DS GS MAINT ALW (a)	(b)	(c)	(8) 1-YR ALW PER 100 EQUIP ON HCCY	(9) DEPOT MAINT ALW PER 100 EQUIP	(10) ILLUSTRATION (a) FIG NO	(b) ITEM NO
					CONTINUED										113E	
					---*---											
X2	H		6695-580-9452	766665-1 <19315>	..BEZEL.....NOTE 1,& 2		EA		1	*	*	*		*	113E	35
X2	H		6695-329-0375	729023-1 <19315>	..BEZEL.....NOTE 3,4,& 5		EA		1	*	*	*		*	113E	
X2	H		6695-729-3851	1225369-1 <19315>	.BEZEL.....NOTE 7		EA		1	*	*	*		*	113E	
			5355-538-6382	MS28105-16 <96906>	..WINDOW,DIAL.....		VX		1	*	*	*		*	113E	36
P	H		5330-599-2295	779854-1 <19315>	..PACKING,PREFORMED.....		EA		AR	*	*	*		*	113E	37
P	H		6610-298-0169	779854-2 <19315>	..PACKING,PREFORMED.....		EA		AR	*	*	2		*	113E	
P	H		6610-298-0170	779854-3 <19315>	..PACKING,PREFORMED....NOTE 6		EA		AR	*	*	2		*	113E	
P	H		6615-558-1434	779854-4 <19315>	..PACKING,PREFORMED.....		EA		AR	*	*	2		*	113E	
P	H		6610-585-9593	779854-5 <19315>	..PACKING,PREFORMED....NOTE 6		EA		AR	*	*	2		*	113E	
			5330-242-6636	AN123858 <88044>	..PACKING,PREFORMED..... NOTE 3,4,5,& 7		EA		2	*	*	*		*	113E	38
P	H		5330-641-0109	717253-1 <19315>	..WASHER,NONMETALLIC..... NOTE 3,4,5,& 7		EA		1	*	*	*		*	113E	39
X2	H		6610-918-1700	1240947-2 <19315>	.BEZEL ASSEMBLY SEE FIG..... 113E <SHEET 2 OF 10> FOR BREAKDOWN NOTE 7		EA		1	*	*	*		*	113E	40
					ATTACHING PARTS											
P	H		5305-808-1534	240-305SSBE <19315>	.SCREW,MACHINE.....NOTE 6		EA		8	*	*	*		*	113E	41
					---*---											
P	H		6610-586-6355	1238951-1 <19315>	.SPRING.....NOTE 6		EA		2	*	*	*		*	113E	42
			5330-242-6636	AN123858 <88044>	.PACKING,PREFORMED.NOTE 1,& 2		EA		1	*	*	*		*	113E	43
P	H		6610-530-4716	782206-1 <19315>	.SPRING,HELICAL,COMPRESSION..		EA		1	*	*	2		*	113E	44
P	H		5340-209-0249	SWSS1209-01MR <19315>	.SHIM.....		EA		1	*	*	*		*	113E	45
P	H		6610-530-4723	790734-1 <19315>	.SPRING,HELICAL,COMPRESSION.. NOTE 1,2,3,4,5,& 6		EA		1	*	*	2		*	113E	46
P	H		6610-329-0381	790749-1 <19315>	.GASKET.....NOTE 3,4,& 7		EA		AR	*	2	2		*	113E	47
P	H		6610-098-5340	790749-2 <19315>	GASKET.....NOTE 3,4,6,& 7		EA		AR	*	2	2		*	113E	
P	H		6610-098-5341	790749-3 <19315>	.GASKET.....NOTE 3,4,& 7		EA		AR	2	2	5		*	113E	
X2	H		6610-986-0419	766699-1 <19315>	.BAR ASSEMBLY,ATTITUDE SEE.. FIG.113E <SHEET 3 OF 10> FOR BREAKDOWN NOTE 1,2,3,4,& 5		EA		1	*	*	*		*	113E	48
X2	H		6610-855-6174	1251385-1 <19315>	.MECHANISM ASSEMBLY,..... INDICATOR SEE FIG.113E <SHEET 4 OF 10> FOR BREAKDOWN NOTE 7		EA		1	*	*	*		*	113E	49
P	H		6610-519-3242	B146-1J <19315>	.DIAL.....NOTE 1,2,3,4,& 5		EA		1	*	*	2		*	113E	50
P	H		6610-576-9856	J146-1J <19315>	.DIAL,SCALE.....NOTE 6		EA		1	*	*	*		*	113E	
P	H		6610-685-3974	1251397-1 <19315>	.DIAL.....NOTE 7		EA		1	*	*	*		*	113E	51
P	H		6610-545-5587	732263-1 <19315>	.SPACER,DIAL.....NOTE 7		EA		1	*	2	2		*	113E	52
P	H		5340-321-3452	729024-1 <19315>	.PLATE,CLAMP.....		EA		1	*	*	*		*	113E	53
					ATTACHING PARTS											
P	H		5305-207-5019	225-606SS <19315>	.SCREW,MACHINE.....		EA		2	*	*	*		*	113E	54
					---*---											
P	H		5315-096-1433	766690-1 <19315>	.PIN,GROOVED.....		EA		2	*	*	*		*	113E	55
P	H		6610-329-0376	729025-1 <19315>	.BLOCK,CLAMP.....		EA		1	*	*	*		*	113E	56
X2	H		6610-589-6477	754360-1 <19315>	.BRACKET ASSEMBLY,CENTERING.. SEE FIG.113E <SHEET 5 OF 10> FOR BREAKDOWN		EA		1	*	*	*		*	113E	57
P	H		6615-096-1295	713414-1 <19315>	.BLOCK ASSEMBLY,BRUSH.....		EA		1	*	*	*		*	113E	58

(1) SOURCE MAINT AND REC CODE (a) SOURCE CODE	(b) MAINT LEVEL	(c) REC CODE	(2) FEDERAL STOCK NUMBER	REFERENCE NUMBER	(3) DESCRIPTION	MODELS USABLE ON CH-34C	(4) UNIT OF ISSUE	(5) QTY INC IN UNIT PACK	(6) QTY INC IN UNIT	(7) 30-DAY DS GS MAINT ALW (a) -20	(b) 21-50	(c) 51-100	(8) 1-YR ALW PER 100 EQUIP CNTGCY	(9) DEPOT MAINT ALW PER 100 EQUIP	(10) ILLUSTRATION (a) FIG NO	(b) ITEM NO
					CONTINUED										113E	58
					ATTACHING PARTS											
P	H		5305-977-7494	225-205-1-2SS <19315>	.SCREW,MACHINE.....		EA		2	*	*	*		*	113E	59
P	H		5310-805-3214	1227-1-116 <82423>	.WASHER,FLAT.....		EA		AR	*	*	*		*	113E	60
					---*---											
P	H		6610-096-1286	711473-1 <19315>	.SHIM.....		EA		AR	*	*	*		*	113E	61
P	H		6610-397-9917	711696-1 <19315>	.SHAFT ASSEMBLY..... NOTE 1,2,3,4,& 5		EA		1	*	*	*		*	113E	62
P	H		6610-591-3829	1243004-1 <19315>	.SHAFT ASSEMBLY.....NOTE 6		EA		1	*	*	*		*	113E	
P	H		6610-544-3233	1251393-1 <19315>	.SHAFT ASSEMBLY.....NOTE 7		EA		1	*	*	2		*	113E	63
					ATTACHING PARTS											
P	H		6610-096-1297	713423-1 <19315>	.PLATE,BEARING.....		EA		1	*	*	*		*	113E	64
P	H		5305-443-6150	PB8327-2 <19315>	.SCREW,MACHINE.....		EA		2	*	*	*		*	113E	65
					---*---											
P	H		6615-303-9587	1225368-1 <19315>	.SHIM.....NOTE 7		EA		1	*	*	2		*	113E	66
P	H		6610-786-8546	713426-1 <19315>	.BRACKET AND MOTOR ASSEMBLY.. NOTE 1		EA		1	*	*	*		*	113E	
P	H		6610-986-0415	713426-2 <19315>	.BRACKET AND MOTOR ASSEMBLY.. NOTE 2,3,4,5,& 7		EA		1	*	*	*		*	113E	
P	H		6610-918-1699	1240580-1 <19315>	.BRACKET AND MOTOR ASSEMBLY.. NOTE 6		EA		1	*	*	*		*	113E	
					ATTACHING PARTS											
P	H		5305-816-0032	230-304SS <19315>	.SCREW,MACHINE.....		EA		3	*	*	*		*	113E	67
P	H		5310-264-1995	11500206 <19315>	.WASHER,LOCK.....		EA		3	*	*	*		*	113E	68
					---*---											
P	H		6610-321-3469	770309-1 <19315>	..HAIRSPRING..... NOTE 1,2,3,4,5,& 7		EA		1	*	*	2		*	113E	69
P	H		6610-546-4641	1240590-6 <19315>	..HAIRSPRING.....NOTE 6		EA		1	*	*	*		*	113E	
					ATTACHING PARTS											
P	H		5315-531-7730	0-236-35 <19315>	..PIN,TAPERED,PLAIN....NOTE 6		EA		1	*	*	*		*	113E	70
					---*---											
P	H		6610-397-9918	711707-1 <19315>	..SECTOR ASSEMBLY..... NOTE 1,2,3,4,& 5		EA		1	*	*	*		*	113E	71
P	H		6610-098-5329	732277-1 <19315>	..SECTOR ASSEMBLY.....NOTE 7		EA		1	*	*	*		*	113E	
P	H		6610-586-6362	1243009-1 <19315>	..ARM ASSEMBLY,ACTUATOR..... NOTE 6		EA		1	*	2	2		*	113E	72
					ATTACHING PARTS											
P	H		5305-945-3944	330-101 1-2ST <19315>	..SETSCREW.....NOTE 6		EA		2	*	*	*		*	113E	73
					---*---											
P	H		6610-096-1287	711691-1 <19315>	...BRACKET ASSEMBLY..... NOTE 1,2,3,4,& 5		EA		1	*	*	*		*	113E	
P	H		6610-571-4835	732270-1 <19315>	...BRACKET ASSEMBLY.....NOTE 7		EA		1	*	*	2		*	113E	
					ATTACHING PARTS											
P	H		5305-215-8333	230-305SS <19315>	...SCREW,MACHINE..... NOTE 1,2,3,4,5,& 7		EA		2	*	*	*		*	113E	74
P	H		5310-264-1995	11500206 <19315>	...WASHER,LOCK..... NOTE 1,2,3,4,5,& 7		EA		2	*	*	*		*	113E	75
					---*---											
P	H		5307-321-3431	711684-1 <19315>	...STUD,IDLER..... NOTE 1,2,3,4,5,& 7		EA		1	*	*	*		*	113E	76
P	H		5315-329-0278	733399-1 <19315>	...PIN,STOP..... NOTE 1,2,3,4,5,& 7		EA		2	*	*	*		*	113E	77

(1) SOURCE, MAINT AND REC CODE (a) SOURCE CODE	(b) MAINT LEVEL	(c) REC CODE	(2) FEDERAL STOCK NUMBER	REFERENCE NUMBER		(3) DESCRIPTION	MODELS USABLE ON CH-34C	(4) UNIT OF ISSUE	(5) QTY INC IN UNIT PACK	(6) QTY INC IN UNIT	(7) 30-DAY DS/GS MAINT ALW (a) 1-20	(b) 21-50	(c) 51-100	(8) 1-YR ALW PER 100 EQUIP CNTGCY	(9) DEPOT MAINT ALW PER 100 EQUIP	(10) ILLUSTRATION (a) FIG NO	(b) ITEM NO
P	H		5307-321-3431	711684-1	<19315>	...STUD,IDLER..... NOTE 1,2,3,4,5,& 7		EA		1	*	*	*		*	113E	78
P	H		6610-986-0411	732271-1	<19315>	...BRACKET,MOTOR..... NOTE 1,2,3,4,5,& 7		EA		1	*	*	*		*	113E	79
P	H		6610-658-6566	1240579-1	<19315>	..BRACKET ASSEMBLY.....NOTE 6 ATTACHING PARTS		EA		1	*	*	*		*	113E	80
P	H		5305-487-5921	240-202-1-2SS	<19315>	..SCREW,MACHINE-NO.2-64 NF,... 5/32 IN.LG NOTE 6		EA		2	*	*	*		*	113E	81
			5310-515-8000	MS35337-39	<96906>	..WASHER,LOCK.....NOTE 6 ---*---		HD		2	*	*	*		13	113E	82
				CK1005-7B1	<19315>	..MOTOR ASSEMBLY,LOW..... INERTIA SEE FIG.113E <SHEET 6 OF 10> FOR BREAKDOWN NOTE 1		EA		1						113E	83
P	H		6105-804-5992	CK1005-7B3	<19315>	..MOTOR ASSEMBLY,LOW..... INERTIA SEE FIG.113E <SHEET 6 OF 10> FOR BREAKDOWN NOTE 2,3,4,5,& 7		EA		1	*	2	2		*	113E	
				CK1047-23A1	<19315>	..MOTOR ASSEMBLY,LOW..... INERTIA SEE FIG.113E <SHEET 7 OF 10> FOR BREAKDOWN NOTE 6		EA		1						113E	84
P	H		3020-288-5026	732276-1	<19315>	.GEAR,SPUR.....NOTE 7		EA		1	*	*	*		*	113E	85
			5340-619-7229	MS16633-1006	<96906>	.RING,RETAINING.....NOTE 7		EA		1	*	*	*		*	113E	86
P	H		5310-526-2402	732275-1	<19315>	.WASHER,FLAT.....NOTE 7		EA		1	*	*	*		*	113E	87
X2	H			790775-1	<19315>	.GYRO AND YOKE ASSEMBLY..... SEE FIG.113E <SHEET 8 OF 10> FOR BREAKDOWN NOTE 1		EA		1						113E	88
X2	H			790775-3	<19315>	.GYRO AND YOKE ASSEMBLY..... SEE FIG.113E <SHEET 8 OF 10> FOR BREAKDOWN NOTE 7		EA		1						113E	
X2	H			790775-4	<19315>	.GYRO AND YOKE ASSEMBLY..... SEE FIG.113E <SHEET 8 OF 10> FOR BREAKDOWN NOTE 4		EA		1						113E	
X2	H			790775-5	<19315>	.GYRO AND YOKE ASSEMBLY..... SEE FIG.113E <SHEET 8 OF 10> FOR BREAKDOWN NOTE 5,& 6 ATTACHING PARTS		EA		1						113E	
P	H		5305-207-5006	225-402-1-2SS	<19315>	.SCREW,MACHINE..... ---*---		EA		2	*	*	*		*	113E	89
P	H		6615-545-9889	1245746-1	<19315>	.PLATE AND LUG ASSEMBLY..... NOTE 1,2,3,4,5,& 7 ATTACHING PARTS		EA		1	*	*	*		*	113E	90
P	H		5305-977-7493	230-404SS	<19315>	.SCREW,MACHINE..... NOTE 1,2,3,4,5,& 7		EA		2	*	*	*		*	113E	91
P	H		5310-754-4606	530-4SS	<19315>	.WASHER,LOCK..... NOTE 1,2,3,4,5,& 7 ---*---		EA		2	*	*	*		*	113E	92
P	H		5330-599-2295	779854-1	<19315>	.PACKING,PREFORMED..... NOTE 1,2,3,4,5,& 6		EA		3	*	*	*		*	113E	93

(1) SOURCE, MAINT AND REC CODE (a) SOURCE CODE	(b) MAINT LEVEL	(c) REC LEVEL	(2) FEDERAL STOCK NUMBER	REFERENCE NUMBER	(3) DESCRIPTION	MODELS USABLE ON CH-34C	(4) UNIT OF ISSUE	(5) QTY INC IN UNIT PACK	(6) QTY INC IN UNIT	(7) 30-DAY DS GS MAINT ALW (a) 1-20	(b) 21-50	(c) 51-100	(8) 1-YR ALWPER 100 EQUIP CNTGCY	(9) DEPOT MAINT ALWPER 100 EQUIP	(10) ILLUSTRATION (a) FIG NO	(b) ITEM NO
P	H		6610-298-0170	779854-3	<19315> .PACKING,PREFORMED.....NOTE 7 NOTE 1,2,3,4,5,& 7		EA		1	*	*	REF		*	113E	
P	H		6610-585-9593	779854-5	<19315> .PACKING,PREFORMED..... NOTE 1,2,3,4,5,& 7		EA		1	*	*	REF		*	113E	
X2	H		6610-586-6372	711472-2	<88917> .FRAME ASSEMBLY.....		EA		1	*	*	*		*	113E	
P	H		5315-888-7384	179-326-98	<19315> ..PIN,STRAIGHT,HEADLESS..... NOTE 1,2,3,4,& 5		EA		1	*	*	*		*	113E	94
X1				1238945-1	<19315> .BRACKET.....NOTE 6 ATTACHING PARTS		EA		1						113E	96
P	H		5305-487-5921	240-202-1-2SS	<19315> .SCREW,MACHINE-NO.2-64 NF.... 5/32 IN.LG NOTE 6		EA		2	*	*	*		*	113E	97
			5310-515-8000	MS35337-39	<96906> .WASHER,LOCK.....NOTE 6 ---*---		HD		2	*	*	*		*	113E	98
X1				1238950-1	<19315> .SHAFT ASSEMBLY..... NOTE 6		EA		1						113E	99
X1				1240946-3	<19315> .WASHER.....NOTE 6		EA		1						113E	100
X1				1251770-1	<19315> .SHIM,SPRING.....NOTE 6		EA		1						113E	101
				1238953-2	<19315> .BAR ASSEMBLY.....NOTE 6		EA		1						113E	102
X1				1238948-1	<19315> .GEAR ASSEMBLY.....NOTE 6		EA		1						113E	103
			5330-252-6048	MS29513-006	<96906> .PACKING,PREFORMED.....NOTE 6		EA		1	*	*	*		*	113E	104
X1				1238946-1	<19315> .RING.....NOTE 6		EA		1						113E	105
P	H		6610-527-8228	1240988-1	<19315> .PACKING,PREFORMED.....NOTE 6		EA		1	*	*	*		*	113E	107
X1				1238944-1	<19315> .BEZEL.....NOTE 6		EA		1						113E	108
P	H		6610-918-1701	178-479-198	<19315> .PIN,STRAIGHT,HEADLESS-NOTE 6		EA		1	*	*	*		*	113E	109
			5330-242-6636	AN123858	<88044> .PACKING,PREFORMED.....NOTE 6		EA		2	*	*	*		*	113E	110
P	H		5330-641-0109	717253-1	<19315> .WASHER.....NOTE 6		EA		1	*	*	*		*	113E	111
P	H		6610-096-1511	793260-2	<19315> .BAR,ATTITUDE.NOTE 1,2,3,4,&5		EA		1	*	*	*		*	113E	112
P	H		6610-095-8779	728208-1	<19315> .CHAIN.....NOTE 1,2,3,4,& 5		EA		1	*	*	*		*	113E	113
P	H		6610-321-3468	767886-1	<19315> .SPRING,HELICAL,EXTENSION.... NOTE 1,2,3,4,& 5		EA		1	*	*	*		*	113E	114
P	H		6610-096-1463	782231-1	<19315> .PULLEY,INDICATOR..... NOTE 1,2,3,4,& 5		EA		1	*	*	*			113E	115
P	H		5310-025-8140	726873-4	<19315> .WASHER,FLAT.NOTE 1,2,3,4,& 5		EA		2	*	*	*		*	113E	116
			5330-242-6635	AN123856	<88044> .PACKING,PREFORMED..... NOTE 1,2,3,4,& 5		EA		1	*	*	*		*	113E	117
P	H		5315-561-3772	728209-1	<19315> .PULLEY.....NOTE 1,2,3,4,& 5 ATTACHING PARTS		EA		4	*	*	*		*	113E	118
P	H		5307-095-8780	728211-1	<19315> .STUD.....NOTE 1,2,3,4,& 5 ---*---		EA		4	*	*	*		*	113E	119
P	H		6610-528-4908	728210-1	<19315> .PULLEY,FLAT.NOTE 1,2,3,4,& 5 ATTACHING PARTS		EA		1	*	*	*		*	113E	120
P	H		5307-095-8781	728211-2	<19315> .STUD.....NOTE 1,2,3,4,& 5 ---*---		EA		1	*	*	*		*	113E	121
P	H		6610-546-4648	766698-1	<19315> .FRAME,HORIZON BAR..... NOTE 1,2,3,4,& 5		EA		1	*	*	*		*	113E	122
P	H		5305-303-9586	1224710-1	<19315> .SETSCREW.....NOTE 7		EA		1	*	*	*		*	113E	123
P	H		6610-303-9585	1224709-1	<19315> .GEAR AND WORM ASSEMBLY..... NOTE 7		EA		1	*	*	*		*	113E	124
P	H		6610-567-5968	1251386-1	<19315> .BAR ASSEMBLY.....NOTE 7		EA		1	*	*	*		*	113E	125
P	H		6610-303-9583	1222708-2	<19315> .GEAR ASSEMBLY.....NOTE 7 ATTACHING PARTS		EA		1	*	*	2		*	113E	[illegible]

(1) SOURCE, MAINT AND REC CODE (a) SOURCE CODE	(b) MAINT LEVEL	(c) REC CODE	(2) FEDERAL STOCK NUMBER	REFERENCE NUMBER	(c) DESCRIPTION	MODELS USABLE ON CH-34C	(4) UNIT OF ISSUE	(5) QTY INC IN UNIT ICK	(6) QTY INC IN UNIT	(7) 30-DAY MAINTENANCE (a) 1-20	(b) 21-50	(c) 51	(8) ALLOWANCE (a) COMPLY	(9) QTY ASSY ILLUSTRATED (a) EQUIP	(10) ILLUSTRATION (a) FIG NO	(b) ITEM NO
P	H		5340-520-2027	5133-9	<79136> .RING,RETAINING.....NOTE 7		EA		1	*	*	*		*	113E	127
					---*---											
			5330-252-6048	MS29513-006	<96906> .PACKING,PREFORMED.....NOTE 7		EA		1	*	*	*		*	113E	128
P	H		5315-678-1507	178-323-10B	<19315> .PIN,STRAIGHT,HEADLESS-NOTE 7		EA		1	*	*	*		*	113E	129
X2	H			1222705-1	<19315> .FRAME.....NOTE 7		EA		1						113E	130
P	H		6615-096-1399	740944	<19315> .ROLLER.....		EA		2	*	*	*		*	113E	131
					ATTACHING PARTS											
			5340-619-7229	MS16633-1006	<96906> .RING,RETAINING.....		EA		2	*	*	*		*	113E	132
					---*---											
P	H		6610-304-6948	717683-1	<19315> .BRACKET ASSEMBLY.....		EA		1	*	*	*		*	113E	133
					ATTACHING PARTS											
P	H		5305-215-6238	225-603SS	<19315> .SCREW,MACHINE.....		EA		2	*	*	*		*	113E	134
					---*---											
P	H		5305-215-6528	225-302-1-2SS	<19315> .SCREW,MACHINE.....		EA		1	*	*	*		*	113E	135
P	H		6610-337-5423	754361-1	<19315> .BLOCK ASSEMBLY.....		EA		1	*	*	*		*	113E	136
P	H		6610-091-7129	717679-1	<19315> ..CENTERING ARM ASSEMBLY.....		EA		1	*	*	*		*	113E	137
					ATTACHING PARTS											
P	H		5320-986-0412	782213-1	<19315> ..RIVET,TUBULAR.....		EA		1	*	*	*		*	113E	138
					---*---											
P	H		6610-091-7159	754363-1	<19315> ..PLATE.....		EA		1	*	*	*		*	113E	139
					ATTACHING PARTS											
P	H		5305-977-7492	225-604SS	<19315> ..SCREW,MACHINE.....		EA		1	*	*	*		*	113E	140
					---*---											
P	H		5340-321-3821	752719-1	<19315> ..SHIM,INDICATOR.....		EA		AR	*	*	*		*	113E	141
P	H		5340-321-3822	752719-2	<19315> ..SHIM,INDICATOR.....		EA		AR	*	*	*		*	113E	
P	H		5340-321-3823	752719-3	<19315> ..SHIM,INDICATOR.....		EA		AR	*	*	*		*	113E	
P	H		5340-664-1822	752719-4	<19315> ..SHIM.....		EA		AR	*	*	*		*	113E	
P	H		6610-535-1348	790773-1	<19315> ..PIN.....		EA		1	*	*	*		*	113E	142
P	H		6610-091-7158	754362-1	<19315> ..BLOCK.....		EA		1	*	*	*		*	113E	143
P	H		6105-096-1476	785200-1	<19315> .GEAR,SPUR.....		EA		1	*	*	*		*	113E	144
P	H		5826-092-7509	754116-1	<19315> .CAP,DUST.....		EA		1	*	*	*		*	113E	145
X1				779905-2	<19315> .RETAINER.....		EA		1						113E	146
					ATTACHING PARTS											
P	H		5305-215-6223	240-001-1-2SS	<19315> .SCREW,MACHINE.....		EA		3	*	*	*		*	113E	147
					---*---											
P	H		5340-443-5446	PB2791-1	<19315> .SHIM,BEARING.....		EA		AR	*	*	*		*	113E	148
P	H		5340-443-5454	PB2791-2	<19315> .SHIM,BEARING.....		EA		AR	*	*	*		*	113E	
P	H		5340-443-5455	PB2791-3	<19315> .SHIM,BEARING.....		EA		AR	*	*	*		*	113E	
P	H		5340-167-2787	PB2791-4	<19315> .SHIM,BEARING.....		EA		AR	*	*	*		*	113E	
P	H		5340-167-2786	PB2791-5	<19315> .SHIM,BEARING.....		EA		AR	*	*	*		*	113E	
P	H		5340-443-5458	PB2791-6	<19315> .SHIM,BEARING.....		EA		AR	*	*	*		*	113E	
P	H		5340-167-2788	PB2791-7	<19315> .SHIM,BEARING.....		EA		AR	*	*	*		*	113E	
P	H		5340-443-5460	PB2791-8	<19315> .SHIM,BEARING.....		EA		AR	*	*	*		*	113E	
P	H		5340-443-5461	PB2791-9	<19315> .SHIM,BEARING.....		EA		AR	*	*	*		*	113E	
P	H		5340-531-6524	PB2791-10	<19315> .SHIM,BEARING.....		EA		AR	*	*	*		*	113E	
P	H		5340-443-5448	PB2791-11	<19315> .SHIM,BEARING.....		EA		AR	*	*	*		*	113E	
P	H		6605-181-6202	PB2791-12	<19315> .SHIM,BEARING.....		EA		AR	*	*	*		*	113E	
P	H		5340-443-5450	PB2791-13	<19315> .SHIM,BEARING.....		EA		AR	*	*	*		*	113E	
P	H		5340-167-2783	PB2791-14	<19315> .SHIM,BEARING.....		EA		AR	*	*	*		*	113E	
P	H		5340-443-5452	PB2791-15	<19315> .SHIM,BEARING.....		EA		AR	*	*	*		*	113E	
P	H		5340-181-5830	PB2791-16	<19315> .SHIM,PHOSPHOR BRONZE.....		EA		AR	*	*	*		*	113E	

(1) SOURCE, MAINT AND REC CODE (a) SOURCE	(b) MAINT	(c) REC	(2) FEDERAL STOCK NUMBER	REFERENCE NUMBER		(3) DESCRIPTION	MODELS USABLE ON CH-34C	(4) UNIT OF ISSUE	(5) QTY INC IN UNIT PACK	(6) QTY INC IN UNIT	(7) 30-DAY DS GS MAINT ALW (a) 1-20	(b) 21-50	(c) 51-100	(8) 1-YR ALW PER 100 EQUIP CNTGCY	(9) DEPOT MAINT ALW PER 100 EQUIP	(10) ILLUSTRATION (a) FIG NO	(b) ITEM NO
P	H		6125-616-5731	PB2791-17	<19315>	.SHIM,BEARING.....		EA		AR	*	*	*		*	113E	
P	H		6610-211-8989	779919-1	<19315>	.CAP,MOTOR.....		EA		1	*	*	*		*	113E	149
						ATTACHING PARTS											
X2	H		5305-214-1553	250-205SS	<19315>	.SCREW,MACHINE.....		EA		2	*	*	*		*	113E	150
			5310-167-1373	MS35650-24	<96906>	.NUT,PLAIN,HEXAGON.....		EA		2	*	*	*		*	113E	151
P	H		5310-215-8348	530-2SS	<19315>	.WASHER,LOCK.....		EA		2	*	*	*		*	113E	152
						---*---											
P	H		3110-277-0782	1216297-1	<19315>	.BEARING,BALL,ANNULAR.....		EA		1	*	*	*		*	113E	
						NOTE 2,3,4,5,& 7											
P	H		6105-096-1332	785838-1	<19315>	.ROTOR.....		EA		1	*	*	*		*	113E	154
P	H		3110-277-0782	1216297-1	<19315>	.BEARING,BALL,ANNULAR.....		EA		1	*	*	*		*	113E	
						NOTE 2,3,4,5,& 7											
P	H		6620-041-2565	732877-1	<19315>	.HOUSING ASSEMBLY.....		EA		1	*	*	*		*	113E	156
X1				1240582-1	<19315>	.CAP.....NOTE 6		EA		1						113E	157
						ATTACHING PARTS											
X1				5000-87SN	<19315>	.RING,RETAINING.....NOTE 6		EA		1						113E	158
						---*---											
X1				1240581-1	<19315>	.ROTOR ASSEMBLY.....NOTE 6		EA		1						113E	159
P	H		5310-096-1455	779917-1	<19315>	.WASHER,SPRING TENSION.NOTE 6		EA		1	*	*	*		*	113E	160
X1				1243001-1	<19315>	.SPACER.....NOTE 6		EA		1						113E	161
X1				1240355-1	<19315>	.STATOR ASSEMBLY.....NOTE 6		EA		1						113E	162
X1				1240583-1	<19315>	.HOUSING.....NOTE 6		EA		1						113E	163
P	H		6605-092-7371	766686-2	<19315>	.INDEX,ALUMINUM.....		EA		1	*	*	2		*	113E	164
						ATTACHING PARTS											
P	H		5305-090-2232	PB8327	<19315>	.SCREW.....		EA		2	*	*	*		*	113E	165
						---*---											
P	H		6615-096-1295	713414-1	<19315>	.BLOCK ASSEMBLY,BRUSH.....		EA		1	*	*	*		*	113E	166
						ATTACHING PARTS											
P	H		5305-038-2052	225-205SS	<19315>	.SCREW,MACHINE.....		EA		2	*	*	*		*	113E	167
P	H		5310-805-3214	1227-1-116	<82423>	.WASHER,FLAT.....		EA		AR	*	*	*		*	113E	168
						---*---											
P	H		5340-200-8346	717450-1	<19315>	.STRAP,RETAINING.....		EA		1	*	*	*		*	113E	169
						ATTACHING PARTS											
P	H		5305-215-6227	225-202SS	<19315>	.SCREW,MACHINE.....		EA		1	*	*	*		*	113E	170
						---*---											
P	H		5310-637-0215	782234-1	<19315>	.NUT,PLAIN,HEXAGON.....		EA		1	*	*	*		*	113E	171
P	H		5305-030-7751	782229-1	<19315>	.SCREW,STOP..NOTE 1,2,3,4,& 7		EA		AR	*	*	*		*	113E	172
P	H		5305-303-6839	782229-2	<19315>	.SCREW,STOP..NOTE 1,2,3,4,& 7		EA		AR	*	*	*		*	113E	
P	H		5305-303-6840	782229-3	<19315>	.SCREW,STOP..NOTE 1,2,3,4,& 7		EA		AR	*	*	*		*	113E	
P	H		5305-303-6841	782229-4	<19315>	.SCREW,STOP..NOTE 1,2,3,4,& 7		EA		AR	*	*	*		*	113E	
P	H		5305-303-6842	782229-5	<19315>	.SCREW,STOP..NOTE 1,2,3,4,& 7		EA		AR	*	*	*		*	113E	
P	H		5305-303-6843	782229-6	<19315>	.SCREW,STOP..NOTE 1,2,3,4,& 7		EA		AR	*	*	*		*	113E	
P	H		5305-303-6844	782229-7	<19315>	.SCREW,STOP..NOTE 1,2,3,4,& 7		EA		AR	*	*	*		*	113E	
P	H		5305-303-6845	782229-8	<19315>	.SCREW,STOP..NOTE 1,2,3,4,& 7		EA		AR	*	*	*		*	113E	
P	H		5305-568-3975	782229-9	<19315>	.SCREW,STOP..NOTE 1,2,3,4,& 7		EA		AR	*	*	*		*	113E	
P	H		5305-568-3961	782229-10	<19315>	.SCREW,STOP..NOTE 1,2,3,4,& 7		EA		AR	*	*	*		*	113E	
P	H		5305-568-3962	782229-11	<19315>	.SCREW,STOP..NOTE 1,2,3,4,& 7		EA		AR	*	*	*		*	113E	
P	H		5305-568-3963	782229-12	<19315>	.SCREW,STOP..NOTE 1,2,3,4,& 7		EA		AR	*	*	*		*	113E	
P	H		5305-568-3964	782229-13	<19315>	.SCREW,STOP..NOTE 1,2,3,4,& 7		EA		AR	*	*	*		*	113E	
P	H		5305-568-3965	782229-14	<19315>	.SCREW,STOP..NOTE 1,2,3,4,& 7		EA		AR	*	*	*		*	113E	
P	H		5305-568-3966	782229-15	<19315>	.SCREW,STOP..NOTE 1,2,3,4,& 7		EA		AR	*	*	*		*	113E	
P	H		5305-568-3967	782229-16	<19315>	.SCREW,STOP..NOTE 1,2,3,4,& 7		EA		AR	*	*	*		*	113E	

(1) SOURCE AND REC CODE (a) SOURCE	(b) MAINT	(c) REC	(2) FEDERAL STOCK NUMBER	REFERENCE NUMBER	(3) DESCRIPTION	MODELS USABLE ON CH-34C	(4) UNIT OF ISSUE	(5) QTY INC IN UNIT PACK	(6) QTY INC IN UNIT	(7) 30-DAY DISPOS MAINT ALW (a) -20	(b) 21-50	(8) 1-YR ASSPED (c) 10 EQUIP	(9) DEPOT MAINT (d) EQUIP	(10) COST (e) UNIT PRICE	(f) EXP NO	(11) FIGURE NO
P	H		6615-694-8193	1235962-1	<19315> .STOP,ECCENTRIC.....OTE 5,C 6		EA		AR	*	*	*		*	.1139	
P	H		6615-694-8193	1235962-2	<19315> .STOP,ECCENTRIC.....OTE 5,C 6		EA		AR	*	*	*		*	.1139	
P	H		6615-694-8193	1235962-3	<19315> .STOP,ECCENTRIC.....OTE 5,C 6		EA		AR	*	*	*		*	.1139	
P	H		6615-694-8193	1235962-4	<19315> .STOP,ECCENTRIC.....OTE 5,C 6		EA		AR	*	*	*		*	.1139	
P	H		6615-694-8193	1235962-5	<19315> .STOP,ECCENTRIC.....OTE 5,C 6		EA		AR	*	*	*		*	.1139	
P	H		6615-694-8193	1235962-6	<19315> .STOP,ECCENTRIC.....OTE 5,C 6		EA		AR	*	*	*		*	.1139	
P	H		6615-694-8193	1235962-7	<19315> .STOP,ECCENTRIC.....OTE 5,C 6		EA		AR	*	*	*		*	.1139	
P	H		6615-694-8193	1235962-8	<19315> .STOP,SCREW.....OTE 5,C 6		EA		AR	*	*	*		*	.1139	
P	H		6610-694-8194	1235962-9	<19315> .CREW,TOP.....OTE 5,C 6		EA		AR	*	*	*		*	.1139	
P	H		5310-720-3106	FFN836	<89946> .NUT,PLAIN,HEXAGON.....		EA		1	*	*	*		*	.1145	A7.
P	H		6615-936-0423	1251787-1	<19315> .SHIELD,BEARING,GIR.....		EA		2	*	*	*		*	.1139	17.
					ATTACHING PARTS											
P	H		5305-210-0230	223-30335	<19315> .SCREW-MACHINE.....		EA		3	*	*	*		*	.1139	17
					---*---											
P	H		3110-606-1050	1228997-1	<19315> .BEARING BALL,FLANGED.....		EA		2	*	*	*		*	.1139	17.
P	H		5340-036-0498	790767-1	<19315> .SHIM.....		EA		AR	*	*	*		*	.1139	17
P	H		5340-537-0359	790767-2	<19315> .SHIM.....		EA		AR	*	*	*		*	.1139	
P	H		5340-537-0367	790767-3	<19315> .SHIM.....		EA		AR	*	*	*		*	.1139	
P	H		5340-537-0361	790767-4	<19315> .SHIM.....		EA		AR	*	*	*		*	.1139	
P	H		5340-036-0503	790767-5	<19315> .SHIM.....		EA		AR	*	*	*		*	.1139	
P	H		5340-537-0369	790767-6	<19315> .SHIM.....		EA		AR	*	*	*		*	.1139	
P	H		5340-537-0370	790767-7	<19315> .SHIM.....		EA		AR	*	*	*		*	.1139	
P	H		5340-537-0371	790767-8	<19315> .SHIM.....		EA		AR	*	*	*		*	.1139	
P	H		5340-537-0372	790767-9	<19315> .SHIM.....		EA		AR	*	*	*		*	.1139	
P	H		5340-036-0499	790767-10	<19315> .SHIM.....		EA		AR	*	*	*		*	.1139	
XD	H			711470-1	<19315> .GYRO AND SPHERE ASSEMBLY.....		EA		1						.1139	17-4
					SEE FIG.1138 <SHEET 4 OF											
					10> FOR BREAKDOWN											
					NOTE 1,2-1,5 AR 7.											
XD	H			711470-3	<19315> .GYRO AND SPHERE ASSEMBLY.....		EA		1						.1139	
					SEE FIG.1138 <SHEET 4 OF											
					10> FOR BREAKDOWN NOTE 4											
P	H		6615-096-1461	792200-1	<19315> .JEWEL.....		EA		1	*	*	*		*	.1139	17-1
					ATTACHING PARTS											
P	H		5305-443-6150	PB8327-1	<19315> .SCREW,HEXAGONAL.....		EA		2	*	*	*		*	.1139	8.
			5340-610-7229	MS16653-1006	<96906> .RING,RETAINING.....		EA		1	*	*	*		*	.1139	8.
					---*---											
P	H		5340-096-1422	766674-1	<19315> .SHIM.....		EA		AR	*	*	*		*	.1139	.82
P	H		5340-096-1423	766674-2	<19315> .SHIM.....		EA		AR	*	*	*		*	.1139	
P	H		5310-096-1424	766674-3	<19315> .WASHER,FLAT.....		EA		AR	*	*	*		*	.1139	
P	H		5310-096-1425	766674-4	<19315> .WASHER,FLAT.....		EA		AR	*	*	*		*	.1139	
P	H		5310-096-1425	766674-5	<19315> .WASHER,FLAT.....		EA		AR	*	*	*		*	.1139	
P	H		6610-096-1494	790754-1	<19315> .GYR ASSEMBLY,HORIZON.....		EA		1	*	*	2		*	.1139	.83
					ATTACHING PARTS											
P	H		5305-096-1427	766675-1	<19315> .SCREW,PIVOT.....		EA		1	*		*		*	.1139	.83
			5340-610-7229	MS16653-1006	<96906> .RING,RETAINING.....		EA		1	*		*		*	.1139	.83
					---*---											
P	H		6670-897-9943	782203-1	<19315> ..FRAME ASSEMBLY.....		EA		1	*	*	2		*	.1139	.83
					ATTACHING PARTS											
P	H		5305-443-6151	PB8327-3	<19315> ..SCREW.....		EA		2	*	*	*		*	.1139	.87
					---*---											
P	H		6610-329-0380	766673-1	<19315> ..COUNTERWEIGHT.....		EA		1	*	*	*		*	.1139	.84

(1) SOURCE, MAINT AND REC CODE (a) SOURCE CODE	(b) MAINT LEVEL	(c) REC CODE	(2) FEDERAL STOCK NUMBER	REFERENCE NUMBER	(3) DESCRIPTION	MODELS USABLE ON CH-34C	(4) UNIT OF ISSUE	(5) QTY INC IN UNIT PACK	(6) QTY INC IN UNIT	(7) 30-DAY DS GS MAINT ALW (a) 1-20	(b) 21-50	(c) 51-100	(8) 1-YR ALWPER 100 EQUIP CNTGCY	(9) DEPOT MAINT ALWPER 100 EQUIP	(10) ILLUSTRATION (a) FIG NO	(b) ITEM NO
					CONTINUED										113E	188
					ATTACHING PARTS											
P	H		5305-090-2232	PB8327 <19315>	..SCREW,MACHINE.....		EA		2	*	*	*		*	113E	189
					---*---											
P	H		6615-096-1319	717153-1 <19315>	..SHIM.....		EA		AR	*	*	2		*	113E	190
P	H		6610-321-3462	722274-2 <19315>	..HORIZON BAR AND ARM.....		EA		1	*	*	2		*	113E	191
					ASSEMBLY											
P	H		6615-098-5362	732024-1 <19315>	..JEWEL.....		EA		1	*	*	*		*	113E	192
P	H		6610-329-0380	766673-1 <19315>	..COUNTERWEIGHT.....		EA		1	*	*	*		*	113E	193
					ATTACHING PARTS											
P	H		5305-090-2232	PB8327 <19315>	..SCREW,MACHINE.....		EA		2	*	*	*		*	113E	194
					---*---											
P	H		6615-096-1319	717153-1 <19315>	..SHIM.....		EA		AR	*	*	REF		*	113E	195
P	H		5340-096-1422	766674-1 <19315>	.SHIM.....		EA		AR	*	*	*		*	113E	196
P	H		5340-096-1423	766674-2 <19315>	.SHIM.....		EA		AR	*	*	*		*	113E	
P	H		5310-096-1424	766674-3 <19315>	.WASHER,FLAT.....		EA		AR	*	*	*		*	113E	
P	H		5310-096-1425	766674-4 <19315>	.WASHER,FLAT.....		EA		AR	*	*	*		*	113E	
P	H		5310-096-1426	766674-5 <19315>	.WASHER,FLAT.....		EA		AR	*	*	*		*	113E	
P	H		6615-397-9947	790772-1 <19315>	.BLOCK,CENTERING.....		EA		1	*	*	*		*	113E	197
P	H		5305-215-6236	225-303SS <19315>	.SCREW,MACHINE.....		EA		2	*	*	*		*	113E	198
P	H		5305-638-8449	382-616 <19315>	.SETSCREW.....		EA		1	*	*	*		*	113E	200
					ATTACHING PARTS											
P	H		5310-095-9977	PB23264-1 <19315>	.NUT,PLAIN,HEXAGON.....		EA		1	*	*	*		*	113E	201
					---*---											
P	H		5305-215-8341	382-616SS <19315>	.SETSCREW.....		EA		AR	*	*	*		*	113E	202
P	H		5305-977-7491	382-620SS <19315>	.SETSCREW.....		EA		AR	*	*	*		*	113E	
P	H		5310-095-9977	PB23264-1 <19315>	.NUT,PLAIN,HEXAGON.....		EA		AR	*	*	*		*	113E	203
P	H		6615-600-3472	1251381-1 <19315>	.COUNTERWEIGHT.....		EA		1	*	*	*		*	113E	204
P	H		5310-688-1370	FFN836T42ST42 <89944>	.NUT,PLAIN,HEXAGON.....		EA		AR	*	*	*		*	113E	205
P	H		5307-550-3767	1242119-1 <19315>	.STUD.....		EA		AR	*	*	*		*	113E	206
			5310-579-1786	MS20341-416A <96906>	.NUT,PLAIN,HEXAGON.....		HD		2	*	*	*		*	113E	207
P	H		3110-603-1697	1250000-1 <19315>	.BEARING,BALL,ANNULAR.....		EA		2	2	2	4		*	113E	208
					ATTACHING PARTS											
P	H		5340-598-3585	790763-1 <19315>	.RING,EXTERNALLY THREADED....		EA		2	*	*	*		*	113E	209
					---*---											
P	H		6615-096-1497	790766-1 <19315>	.SLEEVE.....		EA		1	*	*	*		*	113E	210
X2	H		6615-321-3461	740984-1 <19315>	.YOKE AND PIVOT ASSEMBLY.....		EA		1	*	*	*		*	113E	211
					NOTE 1,2,3,& 7											
X2	H		6615-321-3461	740984-1 <19315>	.YOKE AND PIVOT ASSEMBLY.....		EA		1	*	2	2		*	113E	
					NOTE 4,5,& 6											
P	H		6615-091-7137	732158-1 <19315>	..CAM.....		EA		1	*	*	*		*	113E	212
P	H		5305-215-6297	230-405SS <19315>	..SCREW,MACHINE.....		EA		8	*	*	*		*	113E	213
P	H		5305-207-5083	230-405-1-2SS <19315>	..SCREW,MACHINE..NOTE 4,5,& 6		EA		4	*	*	*		*	113E	
			5310-551-7770	MS35337-40 <96906>	..WASHER,LOCK.....		EA		4	*	*	*		*	113E	214
					---*---											
P	H		6615-090-1322	790735-1 <19315>	...RING ASSEMBLY.....		EA		1	*	2	2		*	113E	215
P	H		6615-326-0652	738969-1 <19315>	....PIVOT,YOKE.NOTE 1,2,3,& 7		EA		1	*	*	*		*	113E	216
P	H		6615-326-0652	738969-1 <19315>	....PIVOT,TUBE...NOTE 4,5,& 6		EA		1	*	*	2		*	113E	
P	H		5315-913-2348	179-625-30B <19315>	..PIN,STRAIGHT,HEADLESS-NO...		EA		1	*	*	*		*	113E	217
					0.0625,0.25 IN.LG											
					NOTE 6											
P	H		5315-200-6935	179-792-30B <19315>	..PIN,STRAIGHT,HEADLESS.....		EA		1	*	*	*		*	113E	

(1) SOURCE, MAINT AND REC CODE (a) SOURCE CODE	(b) MAINT CODE	(c) REC CODE	(2) FEDERAL STOCK NUMBER	REFERENCE NUMBER		DESCRIPTION	CODES USABLE ON CH-3 & C	UNIT OF ISS	QTY INCL IN UNIT PACK	QTY REQ	(a) 1-20	(b) 21-50	(c) 51-100	(d) OVER 100	(a) COMP CONTROLLED	(b) EQUIP	ILLUSTRATION (a) FIG NO	(b) ITEM NO
						CONTINUED NOTE 4,& 5											113E	
P	H		5315-913-2348	179-625-308	<19315>	..PIN,STRAIGHT-NO.0.0625,.... 0.30 IN.LG NOTE 6		EA		1	*	*	*		*		113E	
X2	H			766664-1	<19315>	..YOKE,GYRO.....		EA		1							113E	218
P	H		6615-545-5590	782216-1	<19315>	.BLOCK,COUNTERWEIGHT.....		EA		1	*	*	*		*		113E	219
P	H		6615-567-5973	782216-2	<19315>	.BLOCK,COUNTERWEIGHT.....		EA		1	*	*	*		*		113E	
P	H		6615-567-5974	782216-3	<19315>	.BLOCK,COUNTERWEIGHT.....		EA		1	*	*	*		*		113E	
						ATTACHING PARTS												
P	H		5305-487-6089	240-204	<19315>	.SCREW,MACHINE.....		EA		1	*	*	*		*		113E	220
			5310-515-8000	MS35337-39	<96906>	.WASHER,LOCK.....		HD		2	*	*	*		*		113E	221
						----*----												
X2	H		6610-397-9945	782264-2	<19315>	.SPHERE ASSEMBLY.....		EA		1	2	2	5		*		113E	222
						ATTACHING PARTS												
P	H		5305-207-5021	225-203SS	<19315>	.SCREW,MACHINE.....		EA		2	*	*	*		*		113E	223
						----*----												
P	H		6615-096-1428	766678-1	<19315>	.CAM.....		EA		1	*	*	*		*		113E	
						ATTACHING PARTS												
P	H		5305-214-0635	766676-1	<19315>	.SCREW,MACHINE.....		EA		1	*	*	*		*		113E	224
						----*----												
P	H		5340-443-5446	PB2791-1	<19315>	.SHIM,BEARING.....		EA		AR	*	*	*		*		113E	225
P	H		5340-443-5454	PB2791-2	<19315>	.SHIM,BEARING.....		EA		AR	*	*	*		*		113E	
P	H		5340-443-5455	PB2791-3	<19315>	.SHIM,BEARING.....		EA		AR	*	*	*		*		113E	
P	H		5340-167-2787	PB2791-4	<19315>	.SHIM,BEARING.....		EA		AR	*	*	*		*		113E	
P	H		5340-167-2786	PB2791-5	<19315>	.SHIM,BEARING.....		EA		AR	*	*	*		*		113E	
P	H		5340-443-5458	PB2791-6	<19315>	.SHIM,BEARING.....		EA		AR	*	*	*		*		113E	
P	H		5340-167-2788	PB2791-7	<19315>	.SHIM,BEARING.....		EA		AR	*	*	*		*		113E	
P	H		5340-443-5460	PB2791-8	<19315>	.SHIM,BEARING.....		EA		AR	*	*	*		*		113E	
P	H		5340-443-5461	PB2791-9	<19315>	.SHIM,BEARING.....		EA		AR	*	*	*		*		113E	
P	H		5340-531-6524	PB2791-10	<19315>	.SHIM,BEARING.....		EA		AR	*	*	*		*		113E	
P	H		5340-443-5448	PB2791-11	<19315>	.SHIM,BEARING.....		EA		AR	*	*	*		*		113E	
P	H		6605-181-6202	PB2791-12	<19315>	.SHIM,BEARING.....		EA		AR	*	*	*		*		113E	
P	H		5340-443-5450	PB2791-13	<19315>	.SHIM,BEARING.....		EA		AR	*	*	*		*		113E	
P	H		5340-167-2783	PB2791-14	<19315>	.SHIM,BEARING.....		EA		AR	*	*	*		*		113E	
P	H		5340-443-5452	PB2791-15	<19315>	.SHIM,BEARING.....		EA		AR	*	*	*		*		113E	
P	H		5340-181-5830	PB2791-16	<19315>	.SHIM,PHOSPHOR BRONZE.....		EA		AR	*	*	*		*		113E	
P	H		6125-616-5731	PB2791-17	<19315>	.SHIM,BEARING.....		EA		AR	*	*	*		*		113E	
P	H		5310-205-9251	SWSS1612-07KP	<19315>	.WASHER,FLAT.....		EA		1	*	*	*		*		113E	226
P	H		6615-096-1342	723465-1	<19315>	.BLOCK,COUNTERWEIGHT.....		EA		1	*	*	*		*		113E	227
						ATTACHING PARTS												
P	H		5305-207-9473	225-202-1-2SS	<19315>	.SCREW,MACHINE.....		EA		2	*	*	*		*		113E	228
						----*----												
P	H		5307-559-9233	1242118-3	<19315>	.STUD.....		EA		2	*	*	*		*		113E	229
P	H		5310-596-4963	101-4	<19315>	.NUT,PLAIN,HEXAGON.....		EA		2	*	*	*		*		113E	230
P	H		5310-181-4219	764196-1	<19315>	.NUT,PLAIN,ROUND.....		EA		1	*	*	*		*		113E	231
P	H		5310-181-4623	764196-2	<19315>	.NUT,PLAIN,ROUND.....		EA		1	*	*	*		*		113E	
P	H		5310-181-4620	764196-3	<19315>	.NUT,PLAIN,ROUND.....		EA		1	*	*	*		*		113E	
P	H		5310-181-4621	764196-4	<19315>	.NUT,PLAIN,ROUND.....		EA		1	*	*	*		*		113E	
P	H		5310-181-4618	764196-5	<19315>	.NUT,PLAIN,ROUND.....		EA		1	*	*	*		*		113E	
P	H		5310-181-4619	764196-6	<19315>	.NUT,PLAIN,ROUND.....		EA		1	*	*	*		*		113E	
P	H		5310-181-4616	764196-7	<19315>	.NUT,PLAIN,ROUND.....		EA		1	*	*	*		*		113E	
P	H		5310-181-4617	764196-8	<19315>	.NUT,PLAIN,ROUND.....		EA		1	*	*	*		*		113E	

(1) SOURCE, MAINT AND REC CODE (a) SOURCE	(b) MAINT LEVEL	(c) REC LEVEL	(2) FEDERAL STOCK NUMBER	REFERENCE NUMBER	(3) DESCRIPTION	MODELS USABLE ON CH-34C	(4) UNIT OF ISSUE	(5) QTY INC IN UNIT PACK	(6) QTY INC IN UNIT	(7) 30-DAY DS GS MAINT ALW (a) 1-20	(b) 21-50	(c) 51-100	(8) 1 YR ALW PER 100 EQUIP CNTGCY	(9) DEPOT MAINT ALW PER 100 EQUIP	(10) ILLUSTRATION (a) FIG NO	(b) ITEM NO
P	H		5310-181-4614	764196-9	<19315> .NUT,PLAIN,ROUND.....		EA		1	*	*	*		*	113E	
P	H		6615-095-8893	764196-10	<19315> .COUNTERWEIGHT.....		EA		1	*	*	*		*	113E	
P	H		6615-181-6190	764196-11	<19315> .COUNTERWEIGHT.....		EA		1	*	*	*		*	113E	
P	H		6615-181-4216	764196-12	<19315> .COUNTERWEIGHT.....		EA		1	*	*	*		*	113E	
P	H		5310-181-4217	764196-13	<19315> .NUT,PLAIN,ROUND.....		EA		1	*	*	*		*	113E	
P	H		5310-181-4218	764196-14	<19315> .NUT,PLAIN,ROUND.....		EA		1	*	*	*		*	113E	
P	H		5310-181-4220	764196-15	<19315> .NUT,PLAIN,ROUND.....		EA		1	*	*	*		*	113E	
P	H		6615-167-2869	764196-16	<19315> .COUNTERWEIGHT.....		EA		1	*	*	*		*	113E	
P	H		5310-181-4615	764196-17	<19315> .NUT,PLAIN,ROUND.....		EA		1	*	*	*		*	113E	
P	H		5310-166-7154	764196-18	<19315> .NUT,PLAIN,ROUND.....		EA		1	*	*	*		*	113E	
P	H		5310-166-7153	764196-19	<19315> .NUT,PLAIN,ROUND.....		EA		1	*	*	*		*	113E	
P	H		5307-550-3767	1242119-1	<19315> .STUD.....		EA		2	*	*	*		*	113E	232
P	H		5310-688-1370	FFN836T42ST42	<89944> .NUT,PLAIN,HEXAGON.....		EA		2	*	*	*		*	113E	233
P	H		6615-600-3472	1251381-1	<19315> .COUNTERWEIGHT.....		EA		1	*	*	*		*	113E	234
P	H		6615-096-1342	723465-1	<19315> .BLOCK,COUNTERWEIGHT.....		EA		1	*	*	*		*	113E	235
					ATTACHING PARTS											
P	H		5305-207-9473	225-202-1-2SS	<19315> .SCREW,MACHINE.....		EA		2	*	*	*		*	113E	236
					---*---											
P	H		5307-576-1101	1242118-4	<19315> .STUD.....		EA		2	*	*	*		*	113E	237
P	H		5310-596-4963	101-4	<19315> .NUT,PLAIN,HEXAGON.....		EA		4	*	*	*		*	113E	238
P	H		5310-181-4219	764196-1	<19315> .NUT,PLAIN,ROUND.....		EA		1	*	*	*		*	113E	239
P	H		5310-181-4623	764196-2	<19315> .NUT,PLAIN,ROUND.....		EA		1	*	*	*		*	113E	
P	H		5310-181-4620	764196-3	<19315> .NUT,PLAIN,ROUND.....		EA		1	*	*	*		*	113E	
P	H		5310-181-4621	764194-4	<19315> .NUT,PLAIN,ROUND.....		EA		1	*	*	*		*	113E	
P	H		5310-181-4618	764196-5	<19315> .NUT,PLAIN,ROUND.....		EA		1	*	*	*		*	113E	
P	H		5310-181-4619	764196-6	<19315> .NUT,PLAIN,ROUND.....		EA		1	*	*	*		*	113E	
P	H		5310-181-4616	764196-7	<19315> .NUT,PLAIN,ROUND.....		EA		1	*	*	*		*	113E	
P	H		5310-181-4617	764196-8	<19315> .NUT,PLAIN,ROUND.....		EA		1	*	*	*		*	113E	
P	H		5310-181-4614	764196-9	<19315> .NUT,PLAIN,ROUND.....		EA		1	*	*	*		*	113E	
P	H		6615-095-8893	764196-10	<19315> .COUNTERWEIGHT.....		EA		1	*	*	*		*	113E	
P	H		6615-181-6190	764196-11	<19315> .COUNTERWEIGHT.....		EA		1	*	*	*		*	113E	
P	H		6615-181-4216	764196-12	<19315> .COUNTERWEIGHT.....		EA		1	*	*	*		*	113E	
P	H		5310-181-4217	764196-13	<19315> .NUT,PLAIN,ROUND.....		EA		1	*	*	*		*	113E	
P	H		5310-181-4218	764196-14	<19315> .NUT,PLAIN,ROUND.....		EA		1	*	*	*		*	113E	
P	H		5310-181-4220	764196-15	<19315> .NUT,PLAIN,ROUND.....		EA		1	*	*	*		*	113E	
P	H		6615-167-2869	764196-16	<19315> .COUNTERWEIGHT.....		EA		1	*	*	*		*	113E	
P	H		5310-181-4615	764196-17	<19315> .NUT,PLAIN,ROUND.....		EA		1	*	*	*		*	113E	
P	H		5310-166-7154	764196-18	<19315> .NUT,PLAIN,ROUND.....		EA		1	*	*	*		*	113E	
P	H		5310-166-7153	764196-19	<19315> .NUT,PLAIN,ROUND.....		EA		1	*	*	*		*	113E	
P	H		6615-096-1386	735145-1	<19315> .COUNTERWEIGHT.....		EA		1	*	*	*		*	113E	240
P	H		6615-096-1387	735145-2	<19315> .COUNTERWEIGHT.....		EA		1	*	*	*		*	113E	
P	H		6615-096-1388	735145-3	<19315> .COUNTERWEIGHT.....		EA		1	*	*	*		*	113E	
P	H		6615-096-1389	735145-4	<19315> .COUNTERWEIGHT.....		EA		1	*	*	*		*	113E	
				AP29	<19315> .GYRO ASSEMBLY SEE FIG.....		EA		1						113E	24
					113E <SHEET 10 OF 10> FOR											
					BREAKDOWN NOTE 1,2,3,5,& 6											
				AP41A1	<19315> .GYRO ASSEMBLY SEE FIG.....		EA		1						113E	
					113E <SHEET 10 OF 10> FOR											
					BREAKDOWN NOTE 4,& 7											
P	H		5307-397-9940	767557-1	<19315> .STUD.....NOTE 1,2,3,5,& 6		EA		1	*	*	*		*	113E	2 2
P	H		5310-596-4963	101-4	<19315> .NUT,PLAIN,HEXAGON.NOTE 4,& 7		EA		1	*	*	*		*	113E	2 3
X2	H		6615-334-6904	FE40166-1	<19315> .COVER,HOUSING.....		EA		1	*	*	*		*	113E	2 5

(1) SOURCE, MAINT AND REC CODE (a) SOURCE CODE	(b) MAINT LEVEL	(c) REC CODE	(2) FEDERAL STOCK NUMBER	REFERENCE NUMBER	(3) DESCRIPTION	MODELS USABLE ON CH-34C	(4) UNIT OF ISSUE	(5) QTY INC IN UNIT PACK	(6) QTY INC IN UNIT	(7) 30 DAY DS GS MAINT ALW (a) 1-20	(b) 21-50	(c) 51-100	(8) 1 YR ALWFER 100 EQUIP CNTGCY	(9) DEPOT MAINT ALWFER 100 EQUIP	(10) ILLUSTRATION (a) FIG NO	(b) ITEM NO
					CONTINUED										113E	245
					ATTACHING PARTS											
P	H		5305-487-6096	240-204SS <19315>	.SCREW,MACHINE.....		EA		4	*	*	*		*	113E	246
			5310-515-8000	MS35337-39 <96906>	.WASHER,FLAT.....		HD		4	*	*	*		*	113E	247
					---*---											
P	H		3110-159-9153	PB21256-1 <19315>	.BEARING,BALL,ANNULAR.....		EA		1	*	*	*		*	113E	248
X2	H			790628-1 <19315>	.ROTOR ASSEMBLY.....		EA		1						113E	
P	H		5999-119-5011	PB36119-1 <19315>	..MAGNET.....		EA		1	*	*	*		*	113E	249
					ATTACHING PARTS											
P	H		5310-688-1370	FFN836T42ST42 <89944>	..NUT,PLAIN,HEXAGON.....		EA		1	*	*	*		*	113E	250
					---*---											
P	H		6615-487-6853	PB32980-1 <19315>	..WASHER,COUPLING.....		EA		1	*	*	*		*	113E	251
P	H		3110-183-9772	PB21257-1 <19315>	..RING,INNER BEARING.....		EA		2	*	*	*		*	113E	252
X2	H		6615-986-0413	1251769-1 <19315>	.ERECTION SYSTEM.....		EA		1	*	*	*		*	113E	254
					NOTE 1,2,3,5,& 6											
X2	H			1260302-1 <19315>	.ERECTION SYSTEM...NOTE 4,& 7		EA		1						113E	
					ATTACHING PARTS											
P	H		5310-487-6871	PB33749-1 <19315>	.NUT,PLAIN.....		EA		1	*	*	*		*	113E	255
					---*---											
P	H		3110-155-9623	PB26396-1 <19315>	..BEARING,BALL,ANNULAR.....		EA		1	*	*	*		*	113E	256
P	H		3110-155-9623	PB26396-1 <19315>	..BEARING,BALL,ANNULAR.....		EA		1	*	*	*		*	113E	
P	H		6615-181-5423	PB37361 <19315>	..PINION AND RATCHET ASSEMBLY		EA		1	*	*	2		*	113E	257
P	H		6615-028-2199	PB29087-2 <19315>	..PAWL ASSEMBLY,GYRO.....		EA		1	*	*	*		*	113E	258
P	H		6615-546-4643	1251768-1 <19315>	..COUNTERWEIGHT.....		EA		1	*	*	*		*	113E	259
					NOTE 1,2,3,5,& 6											
P	H		6615-073-6593	732253-5 <19315>	..COUNTERWEIGHT....NOTE 4,& 7		EA		3	*	*	*		*	113E	260
					ATTACHING PARTS											
P	H		5305-487-6121	240-303 <19315>	..SCREW,MACHINE.....		EA		2	*	*	*		*	113E	261
					NOTE 1,2,3,5,& 6											
P	H		5305-207-9473	225-202-1-2SS <19315>	..SCREW,MACHINE....NOTE 4,& 7		EA		2	*	*	*		*	113E	262
					---*---											
P	H		6605-875-1497	PB21026-1 <19315>	..ROLLER,ERECTION.....		EA		2	*	*	2		*	113E	263
					ATTACHING PARTS											
P	H		5315-443-5115	PB21027 <19315>	..PIN,STRAIGHT,HEADLESS.....		EA		2	*	*	*		*	113E	264
					---*---											
P	H		3110-227-4950	PB26462-1 <19315>	..BEARING,BALL,ANNULAR.....		EA		4	*	*	*		*	113E	265
P	H		6615-210-4566	PB40572-1 <19315>	..INSERT.....		EA		1	*	*	*		*	113E	266
P	H		6615-397-9936	761465-1 <19315>	..BRACKET AND PLATE ASSEMBLY.		EA		1	*	*	*		*	113E	
					NOTE 1,2,3,5,& 6											
P	H		6615-711-2533	1260303-1 <19315>	..BRACKET AND PLATE ASSEMBLY.		EA		1	*	*	*		*	113E	
					NOTE 4,& 7											
P	H		6605-875-1498	PB26847-1 <19315>	...PLATE ERECTION SYSTEM.....		EA		1	*	*	*		*	113E	267
					ATTACHING PARTS											
P	H		5305-487-6085	240-203 <19315>	...SCREW,MACHINE.....		EA		2	*	*	*		*	113E	268
P	H		5310-215-8348	530-2SS <19315>	...WASHER,LOCK.....		EA		2	*	*	*		*	113E	269
					---*---											
P	H		5315-531-9019	PB21776-1 <19315>	...PIN,CARRIER.....		EA		2	*	*	*		*	113E	270
X1				761024-1 <19315>	...PLATE.....NOTE 1,2,3,5,& 6		EA		1						113E	271
P	H		3110-540-7680	1209290-2 <19315>	.BALL,BEARING.....		EA		1	*	2	2		*	113E	272
P	H		3110-555-6803	1214901-1 <19315>	.BALL,BEARING.....		EA		1	*	*	2		*	113E	273
P	H		6615-323-7681	732254-2 <19315>	.GEAR AND GUIDE ASSEMBLY.....		EA		1	*	*	*		*	113E	274
					ATTACHING PARTS											

1 SOURCE MAINT AND REC CODE (a) SOURCE CODE	(b) MAINT CODE	(c) RECOVERY CODE	2 FEDERAL STOCK NUMBER	REFERENCE NUMBER	3 DESCRIPTION	MODELS USABLE ON CH-34C	4 (a) FY	5 QTY INC IN UNIT PACK	6 QTY INC IN IL UNIT	7 30-DAY DS & MAINT (a) 1-10	(b) 21-50	(c) 51-100	8 ITEM ADD R SQUAD ENTITY	9 DEPOT MAINT ADD REQ SQUAD	10 ILLUSTRATION (a) FIG NO	(b) ITEM NO
P	H		5305-487-6096	240-20.55	<19315> .SCREW MACHINE		EA		5	*	*	*		*	13E	275
P	H		6615-397-9938	7666[illegible]	<19315> .TRACK B		EA			*	*	*		*	13E	276
P	H		5310-303-0404	757706-[illegible]	<19315> .WASHER,SP[illegible]		[illegible]		[illegible]	*	*	*		*	13E	277
P	H		5340-443-5202	PB2335[illegible]	<19315> .SHIM		[illegible]			*	*	*		*	13E	278
P	H		5340-443-5206	PB23[illegible]	<19315> .SHIM		EA			*	*	*		*	13E	
P	H		5340-443-5207	PB2335[illegible]	<19315> .WASHER,[illegible]		EA			*	*	*		*	13E	
P	H		5340-443-5208	PB2335[illegible]	<19315> .SHIM		EA		2	*	*	*		*	13E	
P	H		5340-443-5209	PB23339-[illegible]	<19315> .SHIM		[illegible]			*	*	*		*	13E	
P	H		5340-443-5210	PB23359-[illegible]	<19315> .SHIM		EA			*	*	*		*	13E	
P	H		5340-443-5211	PB23359-[illegible]	<19315> .SHIM		EA			*	*	*		*	13E	
P	H		5340-443-5212	PB23359-[illegible]	<19315> .SHIM		EA			*	*	*		*	13E	
P	H		5340-443-5213	PB23336-[illegible]	<19315> .SHIM		[illegible]			*	*	*		*	13E	
P	H		5340-443-5203	PB23339-11	<19315> .SHIM		EA			*	*	*		*	13E	
P	H		5340-443-5204	PB23339-11	<19315> .SHIM		EA			*	*	*		*	13E	
P	H		5340-443-5205	PB23339-12	<19315> .SHIM		EA			*	*	*		*	13E	
P	H		3110-189-9153	PB2125[illegible]	<19315> .BEARING SH[illegible],ANNULAR		EA			*	*	*		*	13E	279
XZ	H			766661-[illegible]	<19315> .STA[illegible] HOUSING ASSEMBLY		EA								13E	
P	H		6610-506-1869	766661-[illegible]	<19315> .TIP,[illegible] ASSEMBLY		EA			*	2	2		*	13E	280
					ATTACHING PARTS											
P	H		5305-215-6227	225-20[illegible]	<19315> .SCREW MACHINE		EA		2	*	*	*		*	13E	281
P	H		6105-096-1465	782271-[illegible]	<19315> .STATOR ASSEMBLY		EA		2	*		*		*	13E	282
					ATTACHING PARTS											
P	H		5310-487-0715	PB2563[illegible]	<19315> .[illegible]		[illegible]			*	*	*		*	13E	283
P	H		5970-467-0872	PB33750-[illegible]	<19315> .WA[illegible]		[illegible]			*	*	*		*	13E	284
P	H		6615-985-0433	1285123-1	<19315> .HOUSING		EA			*	*	*		*	13E	
P	H		6615-096-1296	713415-[illegible]	<19315> .PIVOT ASSEMBLY		EA			*	2	2		*	13E	285
					ATTACHING PARTS											
XZ	H			225-[illegible]-1-255	<19315> .SCREW,MACHINE		EA								13E	286
P	H		6615-096-1428	7666[illegible]-1	<19315> .CAM		EA		1	*	*	*		*	13E	287
					ATTACHING PARTS											
P	H		5305-214-0635	7655[illegible]-1	<19315> .SCREW,MACHINE		EA			*	*	*		*	13E	
XI				728242-1	<19315> .PIVOT ASSEMBLY		EA		1						13E	
XI				724388-1	<19315> .PIVOT ASSEMBLY		EA		1						13E	288
XI				790753-1	<19315> .PIVOT ASSEMBLY		EA		1						13E	
					ATTACHING PARTS											
XZ	H			225-20[illegible]-1-255	<19315> .SCREW MACHINE		EA								13E	289
XI				782212-1	<19315> .PIN,STRAIGHT,HEADLESS		EA								13E	290
P	H		5315-955-1343	179-525-136	<19315> .PIN,SPR SH,HEADLESS		EA				*	*		*	13E	291
					NO [illegible]-15 IN.LG											
XI				729792-1	<19315> .[illegible] AND PIN ASSEMBLY		EA								13E	
XI				179-795-136	<19315> .PIN-NO.[illegible]-0792,0.[illegible] IN.		EA								13E	292
XI				766663-1	<19315> .HOUSING		EA								13E	293
					NOTE											
					U/C [illegible]-[illegible]-C068											
					NOTE											
					U/C [illegible]-[illegible]-C068											

(1) SOURCE, MAINT AND REC CODE (a) SOURCE CODE	(b) MAINT LEVEL	(c) REC CODE	(2) FEDERAL STOCK NUMBER	REFERENCE NUMBER	(3) DESCRIPTION	MODELS USABLE ON CH-34C	(4) UNIT OF ISSUE	(5) QTY INC IN UNIT PACK	(6) QTY INC IN UNIT	(7) 30-DAY DS GS MAINT ALW (a) 1-20	(b) 21-50	(c) 51-100	(8) 1-YR ALW PER 100 EQUIP CNTGCY	(9) DEPOT MAINT ALW PER 100 EQUIP	(10) ILLUSTRATION (a) FIG NO	(b) ITEM NO
					CONTINUED										113E	
					NOTE 3											
					U/O 6610-390-8841											
					NOTE 4											
					U/O 6610-663-8798											
					NOTE 5											
					U/O 6610-526-4717											
					NOTE 6											
					U/O 6610-663-8800											
					NOTE 7											
					U/O 6610-526-6765											
		R	6610-699-5531	673391 <56232>	INDICATOR,ATTITUDE SEE..... FIG.112 FOR NHA		EA		1						113F	1
		R	6610-515-5824	686531 <56232>	INDICATOR,ATTITUDE SEE..... FIG.112 FOR NHA		EA		1						113F	
				276668 <56232>	.PLATE.....		EA		1						113F	2
P	H		6610-526-4911	319016 <56232>	.RETAINER,BREATHER.....		EA		1	*	*	*		*	113F	3
P	H		6610-346-4260	849879 <56232>	.BREATHER.....		EA		1	*	*	*		*	113F	5
P	H		5330-527-8018	319017 <56232>	.GASKET.....		EA		1	*	*	*		*	113F	6
P	H		5310-209-0865	184875 <56232>	.WASHER,LOCK.....		EA		4	*	*	*		*	113F	9
P	H		5340-801-1169	C32C94 <85913>	.CAP,PROTECTIVE,DUST AND..... MOISTURE SEAL		EA		1	*	*	*		*	113F	10
P	H		5340-397-9954	210032 <56232>	.SEAL,METALLIC.....		EA		1	*	*	*		*	113F	11
P	H		5355-523-3419	313211 <56232>	.KNOB,CAGING.....		EA		1	*	*	*		*	113F	12
			5330-579-3158	MS28775-008 <96906>	.PACKING,PREFORMED.....		EA		1	*	*	*		*	113F	14
P	H		6615-530-6725	309581 <56232>	.RING,EXTERNALLY THREADED....		EA		1	*	2	2		*	113F	15
P	H		6610-559-4711	323799 <56232>	.GASKET,INDICATOR.....		EA		1	*	*	*		*	113F	16
P	H		5355-697-6027	842951-1 <56232>	.KNOB.....		EA		1	*	*	*		*	113F	17
P	H		5310-530-9541	314016 <56232>	.WASHER,SPRING TENSION.....		EA		1	*	*	*		*	113F	19
P	H		5310-530-9273	314017 <56232>	.WASHER,PLAIN.....		EA		AR	*	*	*		*	113F	20
			5330-579-3158	MS28775-008 <96906>	.PACKING,PREFORMED.....		EA		1	*	*	*		*	113F	21
X2	H			679517 <56232>	.BEZEL,FRONT.....NOTE 2 ATTACHING PARTS		EA		1						113F	22
P	H		5305-297-8622	316992 <56232>	.SCREW,MACHINE.....NOTE 2		EA		6	*	*	*		*	113F	23
P	H		5310-947-9867	316993 <56232>	.WASHER,FLAT.....NOTE 2 ---*---		EA		6	*	*	*		*	113F	24
P	H		6615-561-3004	841322 <56232>	.GASKET,BEZEL.....		EA		1	*	*	*		*	113F	25
P	H		5355-668-4437	835761 <56232>	.WINDOW,DIAL.....		EA		1	*	*	*		*	113F	26
P	H		6610-308-2481	713489 <56232>	.GASKET.....		EA		1	*	*	*		*	113F	27
P	H		6610-945-8366	713488 <56232>	.MASK,FRONT,INDICATOR.....		EA		1	*	*	*		*	113F	28
P	H		5310-530-9273	314017 <56232>	.WASHER,PLAIN.....		EA		AR	*	*	*		*	113F	29
P	H		6610-589-2677	309647 <56232>	.FLAG,LUMINESCENT..... ATTACHING PARTS		EA		1	*	*	*		*	113F	30
P	H		5310-275-1791	0425-004 <56232>	.NUT,PLAIN,HEXAGON.....		EA		2	*	*	*		*	113F	31
			5310-579-5554	MS35333-35 <96906>	.WASHER,LOCK..... ---*---		HD		1	*	*	*		*	113F	32

(1) SOURCE, MAINT AND REC CODE (a) SOURCE CODE	(b) MAINT LEVEL	(c) REC CODE	(2) FEDERAL STOCK NUMBER	REFERENCE NUMBER	(3) DESCRIPTION	MODELS USABLE ON CH-34C	(4) UNIT OF ISSUE	(5) QTY INC IN UNIT PACK	(6) QTY INC IN UNIT	(7) 30-DAY DS GS MAINT ALW (a) 1-20	(b) 21-50	(c) 51-100	(8) 1-YR ALW PER 100 EQUIP CNTGCY	(9) DEPOT MAINT ALW PER 100 EQUIP	(10) ILLUSTRATION (a) FIG NO	(b) ITEM NO
P	H		6610-099-0151	308793	<56232> .BLOCK ASSEMBLY,LEFT HAND....		EA		1	*	*	*		*	113F	33
P	H		6610-099-0152	309419	<56232> .BLOCK ASSEMBLY,RIGHT HAND...		EA		1	*	*	*		*	113F	34
					ATTACHING PARTS											
P	H		5305-902-1050	0406-030	<56232> .SCREW,MACHINE.....		EA		2	*	*	*		*	113F	35
P	H		5310-209-0865	184875	<56232> .WASHER,LOCK.....		EA		2	*	*	*		*	113F	36
					---*---											
P	H		6615-530-6724	309582	<56232> .RING,EXTERNALLY THREADED....		EA		1	*	*	*		*	113F	37
				672615	<56232> .BEZEL ASSEMBLY,REAR SEE....		EA		1						113F	38
					FIG.113F <SHEET 2 OF 6>											
					FOR BREAKDOWN											
					ATTACHING PARTS											
P	H		5305-274-0526	0406-098	<56232> .SCREW,MACHINE.....		EA		2	*	*	*		*	113F	39
			5310-515-8706	AN935-3	<88044> .WASHER,LOCK.....		HD		2	*	*	*		*	113F	40
					---*---											
P	H		5330-176-3111	254935	<56232> .PACKING,PREFORMED.....		EA		1	*	*	*		*	113F	41
				672681	<56232> .CHASSIS ASSEMBLY SEE FIG...		EA		1						113F	42
					113F <SHEET 3 OF 6> FOR											
					BREAKDOWN NOTE 1											
				680788	<56232> .CHASSIS ASSEMBLY SEE FIG...		EA		1						113F	
					113F <SHEET 3 OF 6> FOR											
					BREAKDOWN NOTE 2											
			5310-543-2410	MS35338-40	<96906> .WASHER,LOCK.....		HD		3	*	*	*		*	113F	45
P	H		5340-520-2027	5133-9	<79136> ..RING,RETAINING.....		EA		1	*	*	*		*	113F	48
P	H		6610-337-5452	850988	<56232> ..SPRING.....		EA		1	*	*	*		*	113F	49
P	H		6610-945-8406	850989	<56232> ..COLLAR,SHAFT,INDICATOR.....		EA		1	*	2	2		*	113F	50
P	H		6610-945-8407	309654	<56232> ..SHAFT,INDICATOR.....		EA		1	*	*	*		*	113F	52
X2	H			713487	<56232> .CASE ASSEMBLY.....		EA		1						113F	53
P	H		6610-945-5793	716161	<56232> ..INDICATOR ASSEMBLY,.....		EA		1	*	*	*		*	113F	54
					LUMINESCENT											
					ATTACHING PARTS											
P	H		5315-947-6257	316338	<56232> ..PIN.....		EA		2	*	*	*		*	113F	55
					---*---											
P	H		6610-589-6479	310458-1	<56232> ..CHAIN.....		EA		1	*	*	*		*	113F	56
P	H		6610-527-1238	309542	<56232> ..SPRING,HELICAL,EXTENSION...		EA		1	*	*	*		*	113F	57
P	H		6610-099-0156	309997	<56232> ..SLIDE ASSEMBLY,ROLLER.....		EA		1	*	*	*		*	113F	
P	H		6610-591-5055	309965	<56232> ..STUD.....		EA		3	*	*	*		*	113F	62
P	H		6610-591-5056	313207	<56232> ..STUD.....		EA		1	*	*	*		*	113F	63
P	H		6610-591-5057	318657	<56232> ..STUD.....		EA		1	*	*	*		*	113F	64
P	H		6610-651-1485	310373	<56232> ..PIN AND SHAFT ASSEMBLY.....		EA		1	*	*	*		*	113F	
P	H		6610-588-4470	309215	<56232> ..BUSHING,SHAFT.....		EA		1	*	*	*		*	113F	67
P	H		6610-945-8319	836315	<56232> ..MASK,LUMINESCENT.....		EA		1	*	*	*		*	113F	68
					ATTACHING PARTS											
P	H		5305-033-3501	244907	<56232> ..SCREW,BINDING HEAD.....		EA		4	*	*	*		*	113F	69
P	H		5330-032-1966	305390	<56232> ..WASHER,NONMETALLIC.....		EA		4	*	*	*		*	113F	70
					---*---											
				0406-111	<56232> ..SCREW,MACHINE.....		EA		4						113F	72
			5310-515-8706	AN935-3	<88044> ..WASHER,LOCK.....		HD		4	*	*	*		*	113F	73
P	H		5330-599-6437	309395	<56232> ..FELT,MECHANICAL,PREFORMED..		EA		1	*	*	*		*	113F	75
P	H		6610-504-5158	310026	<56232> ..CONTACT ASSEMBLY.....		EA		1	*	*	2		*	113F	76
					ATTACHING PARTS											
P	H		5970-098-9754	295508	<56232> ..INSULATOR,CONTACT.....		EA		1	*	*	*		*	113F	78
					---*---											

(a) FSC	(b) STOCK, MAINT AND REC CODE (c) MAINT	(d) REC	FEDERAL STOCK NUMBER	REFERENCE NUMBER		DESCRIPTION	MODELS USABLE ON CH-34C	(e) UNIT OF ISSUE	(f) QTY INCORP IN UNIT PACK	(g) QTY REQ IN UNIT PACK	(h) 0-DAY DEPOT MAINT REQ (h) -20	(i) 21-100	(j) 101-150	(k) 6-YR DEPOT MAINT REQ 100 EQUIP CONTGCY	(l) 9 DEPOT MAINT REQ 100 EQUIP	(m) ILLUSTRATION (n) FIG NO	(o) ITEM NO
P	H		5940-257-5677	244843	<56232>	..TERMINAL.....		EA		1	*	*	*		*	113F	79
P	H		5977-557-5119	313204	<56232>	..HOLDER ASSEMBLY,ELECTRICAL.		EA		2	*	*	*		*	113F	80
P	H		5970-098-9754	295508	<56232>	..INSULATOR-CONTACT.....		EA		2	*	*	*		*	113F	83
P	H		5940-257-5677	244848	<56232>	..TERMINAL.....		EA		2	*	*	*		*	113F	84
P	H		6610-303-9943	841323	<56232>	..BLOCK,BAKELITE.....		EA		1	*	*	*		*	113F	85
P	H		6610-346-4251	309760	<56232>	..SHIM.....		EA		AR	*	*	*			113F	86
				672517	<56232>	..INDICATOR ASSEMBLY SEE.... FIG.113F <SHEET 4 OF 6> FOR BREAKDOWN NOTE 1		EA		1						113F	87
				686532	<56232>	..INDICATOR ASSEMBLY SEE.... FIG.113F <SHEET 4 OF 6> FOR BREAKDOWN NOTE 2		EA		1						113F	
						ATTACHING PARTS											
P	H		5305-206-0921	0410-077	<56232>	..SCREW,MACHINE.....		EA		2	*	*	*		*	113F	88
						---*---											
P	H		6610-945-8385	835831	<56232>	..TUBE ASSEMBLY.....		EA		1	*	*	*		*	113F	89
						ATTACHING PARTS											
P	H		5305-033-3270	0406-077	<56232>	..SCREW,MACHINE.....		EA		2	*	*	*		*	113F	90
			5310-543-5060	MS35338-39	<96906>	..WASHER,LOCK.....		HD		2	*	*	*		*	113F	91
						---*---											
P	H		5340-214-1428	292575	<56232>	..STRAP,RETAINING.....		EA		1	*	*	*		*	113F	92
P	H		5340-299-1060	309738	<56232>	..SPRING,RETAINER.....		EA		1	*	*	*		*	113F	93
P	H		6610-526-9764	836931	<56232>	..SPRING,COMPRESSION.....		EA		1	*	*	*		*	113F	94
P	H		6610-303-9943	836933	<56232>	..ROD AND TUBE ASSEMBLY.....		EA		1	*	*	*		*	113F	95
P	H		6610-945-8388	836441	<56232>	..BRACKET,MOUNTING.....		EA		1	*	*	*		*	113F	96
						ATTACHING PARTS											
P	H		5305-619-1691	0406-079	<56232>	..SCREW,MACHINE.....		EA		2	*	*	*		*	113F	99
			5310-543-5060	MS35338-39	<96906>	..WASHER,LOCK.....		HD		2	*	*	*		*	113F	100
						---*---											
P	H		5315-909-3824	309630	<56232>	..PIN,MOUNTING.....		EA		1	*	*	*		*	113F	101
						ATTACHING PARTS											
			5305-286-1375	AN501C0-2	<88044>	..SCREW,MACHINE.....		EA		1	*	*	*		*	113F	102
P	H		5310-264-1135	162540	<56232>	..WASHER,LOCK.....		EA		1	*	*	*		*	113F	103
						---*---											
P	H		3040-948-3215	835829	<56232>	...CONNECTING LINK.....		EA		1	*	*	*		*	113F	104
						ATTACHING PARTS											
P	H		5315-947-3240	309631	<56232>	...PIN,STRAIGHT,HEADLESS.....		EA		1	*	*	*		*	113F	105
						---*---											
P	H		5315-911-9994	309374	<56232>	...PIN,GROOVED.....		EA		2	*	*	*		*	113F	106
				714924	<56232>	...YOKE,INDICATOR.....		EA		1						113F	107
				714932	<56232>	..BRACKET,MOUNTING.....		EA		1						113F	108
						ATTACHING PARTS											
P	H		5305-619-1691	0406-079	<56232>	..SCREW,MACHINE.....		EA		1	*	*	*		*	113F	109
			5310-543-5060	MS35338-39	<96906>	..WASHER,LOCK.....		HD		1	*	*	*		*	113F	110
						---*---											
P	H		5340-214-1428	292575	<56232>	..STRAP,RETAINING.....		EA		1	*	*	*		*	113F	111
						ATTACHING PARTS											
			5310-543-5060	MS35338-39	<96906>	..WASHER,LOCK.....		HD		1	*	*	*		*	113F	113
						---*---											
P	H		6610-589-6484	318684-2	<56232>	..BALANCE WEIGHT.....		EA		AR	*	*	*		*	113F	114
P	H		6610-589-6483	318684-1	<56232>	..BALANCE WEIGHT.....		EA		AR	*	*	*		*	113F	
						ATTACHING PARTS											

(1) SOURCE, MAINT AND REC CODE (a) SOURCE CODE	(b) MAINT LEVEL	(c) REC CODE	(2) FEDERAL STOCK NUMBER	REFERENCE NUMBER	(3) DESCRIPTION	MODELS USABLE ON CH-34C	(4) UNIT OF ISSUE	(5) QTY INC IN UNIT PACK	(6) QTY INC IN UNIT	(7) 30-DAY DS GS MAINT ALW (a) 1-20	(b) 21-50	(c) 51-100	(8) 1-YR ALW PER 100 EQUIP CNTGCY	(9) DEPOT MAINT ALW PER 100 EQUIP	(10) ILLUSTRATION (a) FIG NO	(b) ITEM NO
P	H		5305-297-2918	0406-016	<56232> ..SCREW,MACHINE.....		EA		AR	*	*	*		*	113F	115
P	H		5305-207-5638	0406-017	<56232> ..SCREW,MACHINE.....		EA		AR	*	*	*		*	113F	
			5305-286-1375	AN501C0-2	<88044> ..SCREW,MACHINE.....		EA		1	*	*	*		*	113F	
P	H		5310-209-0865	184875	<56232> ..WASHER,LOCK.....		EA		1	*	*	*		*	113F	116
					---*---											
P	H		5977-306-5065	839221	<56232> ..BRUSH ASSEMBLY.....		EA		1	*	*	*		*	113F	117
					ATTACHING PARTS											
P	H		5305-946-2430	314013	<56232> ..SCREW,MACHINE.....		EA		AR	*	*	*		*	113F	118
P	H		5305-946-2428	314014	<56232> ..SCREW,MACHINE.....		EA		AR	*	*	*		*	113F	
P	H		5305-946-2429	314015	<56232> ..SCREW,MACHINE.....		EA		AR	*	*	*		*	113F	
					---*---											
P	H		6610-347-2104	309225-1	<56232> ..PLATE.....		EA		AR	*	*	*		*	113F	119
P	H		6610-347-2105	309225-2	<56232> ..PLATE.....		EA		AR	*	*	*		*	113F	
P	H		6610-346-4250	309225-3	<56232> ..PLATE.....		EA		AR	*	*	*		*	113F	
P	H		6610-589-2679	836735	<56232> ..BAR,HORIZON.....		EA		1	*	*	*		*	113F	120
P	H		6610-945-8402	855490	<56232> ..STOP,ADJUSTABLE.....		EA		2	*	*	*		*	113F	121
P	H		6615-303-9941	836205	<56232> ..SPRING,CONTACT.....		EA		1	*	*	2		*	113F	122
					ATTACHING PARTS											
P	H		6615-662-9381	309222	<56232> ..SPACER,SLEEVE.....		EA		1	*	*	*		*	113F	124
					---*---											
P	H		6615-329-0393	309221	<56232> ..SPACER,CONTACT.....		EA		1	*	2	2		*	113F	125
P	H		6615-527-1248	836685	<56232> ..SPRING,HELICAL,EXTENSION...		EA		1	*	*	*		*	113F	126
P	H		6610-099-0154	309722	<56232> ..FOLLOWER ASSEMBLY.....		EA		1	*	*	*		*	113F	
				309709	<56232> ...WASHER,PLAIN.....		EA		1						113F	128
P	H		6610-346-4258	716071	<56232> ..CAM,CAGING.....		EA		1	*	*	*		*	113F	133
P	H		6615-572-9161	308621	<56232> ..STOP,CAM CAGING.....		EA		1	*	*	*		*	113F	134
					ATTACHING PARTS											
P	H		5305-946-2426	314485	<56232> ..SCREW,MACHINE.....		EA		2	*	*	*		*	113F	135
					---*---											
P	H		6615-348-6699	309218	<56232> ..RING,LOCK.....		EA		1	*	*	*		*	113F	136
					ATTACHING PARTS											
P	H		5305-297-2918	0406-016	<56232> ..SCREW,MACHINE.....		EA		3	*	*	*		*	113F	137
					---*---											
P	H		6610-347-2102	309217	<56232> ..CUP,BEARING.....		EA		1	*	*	*		*	113F	138
P	H		3110-686-1353	SR3DXR5366J	<43334> ..BEARING,BALL,ANNULAR.....		EA		1	*	*	*		*	113F	139
P	H		6610-347-2103	309223	<56232> ..CUP,BEARING.....		EA		1	*	*	*		*	113F	140
					ATTACHING PARTS											
P	H		5310-311-2826	313119	<56232> ..NUT,INDICATOR.....		EA		1	*	*	*		*	113F	141
					---*---											
P	H		3110-227-3498	SR2XR5279W	<43334> ..BEARING,BALL,ANNULAR.....		EA		1	*	*	*		*	113F	142
P	H		5315-527-0164	318278	<56232> ..PIN,PIVOT.....		EA		2	*	*	*		*	113F	143
P	H		6610-347-2101	308658	<56232> ..PIVOT,BAR.....		EA		2	*	*	*		*	113F	144
					ATTACHING PARTS											
P	H		5305-946-2425	314486	<56232> ..SCREW,MACHINE.....		EA		2	*	*	*		*	113F	145
					---*---											
P	H		6610-591-5058	713213	<56232> ..BAR,HORIZON.....		EA		1	*	*	*		*	113F	146
				672516	<56232> ..GYRO ASSEMBLY SEE FIG.....		EA		1						113F	147
					113F <SHEET 5 OF6> FOR											
					BREAKDOWN NOTE 1											
				686530	<56232> ..GYRO ASSEMBLY SEE FIG.....		EA		1						113F	
					113F <SHEET 5 OF 6> FOR											
					BREAKDOWN NOTE 2											

SOURCE, MAINT AND REC CODE (9)	(10)	(11)	(2) FEDERAL STOCK NUMBER	(3) REFERENCE NUMBER		(3) DESCRIPTION	MODELS USABLE ON CH-34C	(12) UNIT OF ISSUE	(15) QTY INC IN UNIT PACK	(6) QTY INC IN UNIT	(7) 30-DAY DS GS MAINT AUTH (10) 1-20	(8) 21-50	(9) 51-100	(10) 3-YR DEPOT MAINT AUTH (101) EQUIP CONTOCT	(100) EQUIP GROUP	(14) ILLUSTRATION (0) FIG	(161) ITEM NO
				308656	<56232>	..STUD,SPRING.....		EA		1						113F	148
P	H		1280-211-9952	309744	<56232>	..DISK,SIGHTING ANGLE.....		EA		1	*	*	*		*	113F	
						ATTACHING PARTS											
			5310-167-0667	MS35337-44	<96906>	..WASHER,LOCK.....		HD		1	*	*	*		*	113F	149
						---*---											
P	H		5305-551-7941	309595	<56232>	..SETSCREW.....		EA		2	*	*	*		*	113F	153
			5310-045-3299	MS35338-42	<96906>	..WASHER,LOCK.....		HD		1	*	*	*		*	113F	154
				671887	<56232>	..BASE,CHASSIS.....		EA		1						113F	155
						ATTACHING PARTS											
P	H		6610-664-2236	308741	<56232>	..SCREW,LOCK.....		EA		1	*	*	*		*	113F	156
						---*---											
P	H		6610-346-4254	713490	<56232>	..COLLAR,INDICATOR.....		EA		1	*	*	*		*	113F	157
						ATTACHING PARTS											
P	H		5305-946-2431	324761	<56232>	..SCREW,MACHINE.....		EA		3	*	*	*		*	113F	158
			5310-543-2410	MS35338-40	<96906>	..WASHER,LOCK.....		HD		3	*	*	*		*	113F	159
P	H		5310-688-0137	500-1073-003	<13499>	..WASHER,FLAT.....		EA		3	*	*	*		*	113F	160
						---*---											
X2	H			713605	<56232>	..CAM,INDICATOR.....		EA		1						113F	161
P	H		5310-207-9065	486009-6	<56232>	..NUT,PLAIN,HEXAGON.....		EA		1	*	*	*		*	113F	162
P	H		3110-227-3501	0379-3	<56232>	..BEARING,BALL,ANNULAR.....		EA		1	*	*	*		*	113F	163
						ATTACHING PARTS											
P	H		6610-317-1942	311800	<56232>	..NUT,BEARING.....		EA		1	*	*	*		*	113F	164
						---*---											
		U		339168	<56232>	..BEARING,SLEEVE.....		EA		1						113F	165
P	H		5340-266-9282	316854	<56232>	..SPACER,RING.....		EA		1	*	*	*		*	113F	166
P	H		6610-526-9763	836701	<56232>	..SPRING,COMPRESSION.....		EA		1	*	*	*		*	113F	167
P	H		5310-947-9865	308739	<56232>	..WASHER,FLAT.....		EA		1	*	*	*		*	113F	168
P	H		5310-208-9141	311799	<56232>	..NUT,RETAINING.....		EA		1	*	*	*		*	113F	169
X2	H			835690	<56232>	..SLEEVE.....		EA		1						113F	170
P	H		5310-530-9121	308740	<56232>	..NUT,PLAIN,ROUND.....		EA		1	*	*	*		*	113F	172
P	H		6610-091-7304	836938	<56232>	..RING ASSEMBLY,ELECTRICAL...		EA		1	*	*	*		*	113F	173
						CONTACT											
P	H		6610-091-7315	322063	<56232>	..BALANCE WEIGHT.....		EA		1	*	*	*		*	113F	174
						ATTACHING PARTS											
			5310-543-5060	MS35338-39	<96906>	..WASHER,LOCK.....		HD		2	*	*	*		*	113F	176
			5310-167-0797	AN960C3	<88044>	..WASHER,FLAT.....		HD		2	*	*	*		*	113F	177
						---*---											
P	H		6615-589-6491	859724-1	<56232>	..BALANCE,INDICATOR.....		EA		AR	*	2	2		*	113F	178
P	H		6615-589-6492	859724-2	<56232>	..BALANCE,INDICATOR.....		EA		AR	*	*	*		*	113F	
P	H		6615-589-6493	859724-3	<56232>	..WEIGHT,BALANCE.....		EA		AR	*	*	*		*	113F	
						ATTACHING PARTS											
			5310-543-5060	MS35338-39	<96906>	..WASHER,LOCK.....		HD		4	*	*	*		*	113F	180
			5310-167-0797	AN960C3	<88044>	..WASHER,FLAT.....		HD		4	*	*	*		*	113F	181
						---*---											
P	H		6610-091-7311	309724	<56232>	..SHAFT ASSEMBLY,ARM.....		EA		1	*	*	*		*	113F	183
						ATTACHING PARTS											
P	H		5305-530-9489	311268	<56232>	..SETSCREW.....		EA		1	*	*	*		*	113F	184
P	H		6615-530-6768	311267	<56232>	..SHIM.....		EA		AR	*	*	*		*	113F	185
						---*---											
P	H		5315-603-4573	318764	<56232>	..PIN,TAPERED,PLAIN.....		EA		1	*	*	*		*	113F	186
P	H		6610-321-3496	839063	<56232>	..SPRING,SPIRAL,TORSION.....		EA		1	*	*	*		*	113F	187
P	H		6610-091-7325	686086	<56232>	..STATOR ASSEMBLY.....NOTE 2		EA		1	*	*	*		*	113F	

(1) SOURCE, MAINT AND REC CODE (a) SOURCE CODE	(b) MAINT LEVEL	(c) REC CODE	(2) FEDERAL STOCK NUMBER	REFERENCE NUMBER	(3) DESCRIPTION	MODELS USABLE ON CH-34C	(4) UNIT OF ISSUE	(5) QTY INC IN UNIT PACK	(6) QTY INC IN UNIT	(7) 30-DAY DS GS MAINT ALW (a) 1-20	(b) 21-50	(c) 51-100	(8) 1-YR ALW PER 100 EQUIP CNTGCY	(9) DEPOT MAINT ALW PER 100 EQUIP	(10) ILLUSTRATION (a) FIG NO	(b) ITEM NO
P	H		5310-948-3238	309632	<56232> ..WASHER,FLAT.....		EA		1	*	*	*		*	113F	190
X2	H			635927	<56232> ..BASE ASSEMBLY.....		EA		1						113F	191
X2	H			676697	<56232> ..SPHERE ASSEMBLY.....		EA		1						113F	192
					ATTACHING PARTS											
P	H		5305-530-9498	311981	<56232> ..SCREW,SPECIAL.....		EA		6	*	*	*		*	113F	193
P	H		5305-637-9044	280174	<56232> ..SCREW,SPECIAL.....		EA		2	*	*	*		*	113F	194
					---*---											
P	H		5310-032-0263	265629	<56232> ..WASHER,FLAT.....		EA		AR	*	*	*		*	113F	196
P	H		6615-032-0283	276963	<56232> ..SHIM.....		EA		AR	*	*	*		*	113F	197
P	H		6615-371-1722	298708	<56232> ..RING.....		EA		AR	*	*	*		*	113F	198
					ATTACHING PARTS											
P	H		5310-275-5635	265625	<56232> ..NUT.....		EA		1	*	*	*		*	113F	199
					---*---											
P	H		6615-474-5599	265635	<56232> ..CUP,SPRING.....		EA		1	*	*	2		*	113F	200
P	H		6615-474-5600	265636	<56232> ..SPRING.....		EA		1	*	*	*		*	113F	201
P	H		6610-329-0386	265638	<56232> ..PLATE,RETAINER.....		EA		1	*	*	*		*	113F	202
					ATTACHING PARTS											
P	H		5305-042-0535	0410-076	<56232> ..SCREW,MACHINE.....		EA		2	*	*	*		*	113F	203
					---*---											
P	H		6610-032-0264	265637	<56232> ..RETAINER.....		EA		1	*	*	*		*	113F	204
P	H		5305-093-5615	254473	<56232> ..SETSCREW.....		EA		2	*	*	*		*	113F	205
					ATTACHING PARTS											
P	H		6615-303-0336	863720	<56232> ..SPRING,LOCK.....		EA		2	*	2	2		*	113F	206
					---*---											
P	H		6615-474-5601	265640	<56232> ..WEIGHT,BALANCE.....		EA		3	*	*	*		*	113F	207
P	H		5305-347-2106	312786	<56232> ..SCREW,SPECIAL.....		EA		1	*	*	*		*	113F	209
P	H		6615-946-7008	312356	<56232> ..BRACKET,INDICATOR.....		EA		1	*	*	*		*	113F	210
					ATTACHING PARTS											
P	H		5305-050-4043	0406-075	<56232> ..SCREW,MACHINE.....		EA		1	*	*	*		*	113F	211
			5310-543-5060	MS35338-39	<96906> ..WASHER,LOCK.....		HD		1	*	*	*		*	113F	212
					---*---											
P	H		6615-589-6480	318320-1	<56232> ..BALANCE,INDICATOR.....		EA		AR	*	*	*		*	113F	213
P	H		6615-589-6481	318320-2	<56232> ..BALANCE,INDICATOR.....		EA		AR	*	*	*		*	113F	214
P	H		6615-946-7012	311871	<56232> ..WEIGHT,BALANCE.....		EA		1	*	*	*		*	113F	216
					ATTACHING PARTS											
P	H		5305-022-5375	0406-078	<56232> ..SCREW,MACHINE.....		EA		1	*	*	*		*	113F	217
			5310-543-5060	MS35338-39	<96906> ..WASHER,LOCK.....		HD		1	*	*	*		*	113F	218
					---*---											
P	H		6615-946-7020	318197	<56232> ..BRACKET,MOUNTING.....		EA		1	*	*	*		*	113F	219
P	H		6615-948-6562	720754	<56232> ..RING,INDICATOR.....		EA		1	*	*	*		*	113F	221
			5305-286-1375	AN501C0-2	<88044> ..SCREW,MACHINE.....		EA		4	*	*	*		*	113F	222
					---*---											
P	H		6610-371-1725	312816	<56232> ..SEAL,DISK,VERTICAL.....		EA		1	*	*	*		*	113F	224
P	H		6615-093-5490	711850	<56232> ..DISK,ERECTING.....		EA		1	*	*	*		*	113F	225
P	H		3110-227-2885	279531	<56232> ..BALL,BEARING.....		EA		4	2	2	3		*	113F	226
X2	H			670545	<56232> ..HOLDER.....		EA		1						113F	227
P	H		6615-167-3823	265643	<56232> ..SHIM.....		EA		8	*	*	*		*	113F	228
P	H		5305-286-4958	0406-043	<56232> ..SCREW,MACHINE.....		EA		2	*	*	*		*	113F	230
P	H		6610-586-6396	282809	<56232> ...INSERT.....		EA		1	*	*	*		*	113F	231
P	H		6615-946-7011	714907	<56232> ...PLATE,BEARING,INDICATOR...		EA		1	*	*	*		*	113F	232
P	H		6615-530-6770	314099	<56232> ..SHIM.....		EA		AR	*	*	*		*	113F	234
P	H		6615-530-6769	314098	<56232> ..SHIM.....		EA		AR	*	*	*		*	113F	235

(1) SOURCE, MAINT AND REC CODE (a) SOURCE CODE	(b) MAINT LEVEL	(c) REC CODE	(2) FEDERAL STOCK NUMBER	REFERENCE NUMBER	(3) DESCRIPTION	MODELS USABLE ON CH-34C	(4) UNIT OF ISSUE	(5) QTY INC IN UNIT PACK	(6) QTY INC IN UNIT	(7) 30-DAY DS GS MAINT ALW (a) 1-20	(b) 21-50	(c) 51-100	(8) 1-YR ALW PER 100 EQUIP CNTGCY	(9) DEPOT MAINT ALW PER 100 EQUIP	(10) ILLUSTRATION (a) FIG NO	(b) ITEM NO
P	H		6615-181-4407	245560 <56232>	..PINION COLLAR AND GEAR..... ASSEMBLY		EA		1	*	*	*		*	113F	
P	H		6615-586-6394	245559 <56232>	...GEAR,SPUR.....		EA		1	*	*	*		*	113F	236
P	H		6210-909-7032	245467 <56232>	...PINION AND COLLAR ASSEMBLY		EA		1	*	2	2		*	113F	
P	H		6610-910-5509	245562 <56232>	....COLLAR,INDICATOR.....		EA		1	*	*	2		*	113F	237
P	H		6615-586-6395	280614 <56232>	....PINION.....		EA		1	2	2	4		*	113F	238
P	H		5310-286-3741	245372 <56232>	...WASHER,FLAT.....		EA		1	*	*	*		*	113F	239
P	H		6615-695-5170	844054 <56232>	..GEAR ASSEMBLY.....		EA		1	*	*	*		*	113F	
P	H		6610-589-6488	844053 <56232>	...PINION.....		EA		1	*	*	*		*	113F	240
P	H		6610-303-0335	842911 <56232>	...HUB AND GEAR ASSEMBLY.....		EA		1	*	*	*		*	113F	241
P	H		6615-530-6769	314098 <56232>	..SHIM.....		EA		AR	*	*	*		*	113F	243
P	H		6615-530-6770	314099 <56232>	..SHIM.....		EA		AR	*	*	*		*	113F	244
X2	H			714906 <56232>	..BEARING ASSEMBLY.....		EA		1						113F	245
P	H		3110-151-8179	283828 <56232>	..BEARING,BALL.....		EA		2	*	*	*		*	113F	247
P	H		3110-157-0455	203054 <56232>	...RING,BEARING,INNER.....		EA		2	*	2	2		*	113F	248
P	H		6615-346-4259	718027 <56232>	...SHAFT,ROTOR.....		EA		1	*	*	*		*	113F	249
				714823 <56232>	..CASE ASSEMBLY SEE FIG..... 113F <SHEET 6 OF 6> FOR BREAKDOWN NOTE 1		EA		1						113F	251
				724529 <56232>	..CASE ASSEMBLY SEE FIG..... 113F <SHEET 6 OF 6> FOR BREAKDOWN NOTE 2		EA		1						113F	
P	H		5315-936-2432	318333 <56232>	..PIN,STRAIGHT.....		EA		2	*	*	*		*	113F	252
P	H		6615-695-5171	847699-1 <56232>	..RING ASSEMBLY,SLIP.....		EA		1	*	*	*		*	113F	253
P	H		6615-308-2480	311781 <56232>	..CONTACT ASSEMBLY.....		EA		1	*	*	2		*	113F	254
P	H		6105-098-5275	686088 <56232>	..STATOR ASSEMBLY.....NOTE 2		EA		1	*	*	*		*	113F	255
P	H		5307-348-4636	309224 <56232>	..STUD,GAGING.....		EA		1	*	*	*		*	113F	256
				673787 <56232>	..CASE,GYRO..... NOTE 1 U/O 6610-699-5531 NOTE 2 U/O 6610-515-5824		EA		1						113F	257
					PANEL ASSEMBLY-FLIGHT AND.... ENGINE INSTRUMENT USBL EFF 54-3000 & SUBSEQUENT										114	
AH	H			S1645-65500 <78286>	PANEL ASSEMBLY-FLIGHT AND.... ENGINE INSTRUMENT USBL EFF 54-3000 THRU 56-4342 SEE FIG.112 FOR NHA		EA								114	
AH	H			S1645-65500-1 <78286>	PANEL ASSEMBLY-FLIGHT AND.... ENGINE INSTRUMENT USBL EFF 57-1684 THRU 57-1690 AND 57-1726 THRU 57-1741 SEE FIG.112 FOR NHA		EA								114	

(1) SOURCE, MAINT AND REC CODE (a) SOURCE CODE	(b) MAINT LEVEL	(c) REC LEVEL	(2) FEDERAL STOCK NUMBER	REFERENCE NUMBER		(3) DESCRIPTION	MODELS USABLE ON CH-34C	(4) UNIT OF ISSUE	(5) QTY INC IN UNIT PACK	(6) QTY INC IN UNIT	(7) 30-DAY DS GS MAINT ALW (a) 1-20	(b) 21-50	(c) 51-100	(8) 1-YR ALW PER 100 EQUIP CNTGCY	(9) DEPOT MAINT ALW PER 100 EQUIP	(10) ILLUSTRATION (a) FIG NO	(b) ITEM NO
AH	H			S1645-65500-2	<78286>	PANEL ASSEMBLY-FLIGHT AND.... ENGINE INSTRUMENT USBL EFF 57-1691 THRU 57-1725 SEE FIG.112 FOR NHA		EA								114	
AH	H			S1645-65012	<78286>	PANEL ASSEMBLY-FLIGHT AND.... ENGINE INSTRUMENT USBL EFF 57-1742 THRU 57-1770 AND 58-1721 SEE FIG.112 FOR NHA		EA								114	
X2	F			S1645-65104-1	<78286>	.NAMEPLATE.....		EA		1						114	
X2	F		5826-656-2227	SS9021	<78286>	.PLATE,IDENTIFICATION.....		EA		1	*	*	*		*	114	
X2	F			S1645-65013	<78286>	.PANEL ASSEMBLY.....		EA		1						114	
P	O		6220-243-8138	B4755	<72914>	.LIGHT,PANEL.....		EA		1	*	*	*		REF	114	1
				ID91ARN6	<00781>	.INDICATOR-COURSE USBL EFF.. 54-3034 THRU 57-1725		EA		1						114	
				ID637ARN59	<00781>	.INDICATOR-AZIMUTH TYPE IN-12 USBL EFF 57-1726 & SUBSEQUENT		EA		1						114	
						ATTACHING PARTS											
			5305-902-1089	MS35202-31	<96906>	.SCREW,MACHINE.....		EA		2	*	*	*		*	114	
			5305-282-5956	AN526DD632R16	<88044>	.SCREW,MACHINE.....		EA		1	*	*	*		*	114	
						---*---											
P	O		6220-243-8138	B4755	<72914>	.LIGHT,PANEL.....		EA		1	*	*	*		REF	114	2
				ID453ARN	<00781>	.INDICATOR-COURSE.....		EA		1						114	
						ATTACHING PARTS											
			5305-902-1089	MS35202-31	<96906>	.SCREW,MACHINE.....		EA		2	*	*	*		*	114	
			5305-282-5956	AN526DD632R16	<88044>	.SCREW,MACHINE.....		EA		1	*	*	*		*	114	
						---*---											
P	O		1680-572-5424	BUA9860-1	<22040>	.CARD,AIRSPEED CORRECTION....		EA		1	REF	REF	REF		REF	114	3
P	O		9905-205-1606	FNA324	<22040>	.HOLDER,CORRECTION CARD.....		EA		1	*	*	*		REF	114	
						ATTACHING PARTS											
			5305-688-2342	N80P16018C6	<03538>	.SCREW,DRIVE.....		BX		2	*	*	*		*	114	
						---*---											
P	O		6220-243-8138	B4755	<72914>	.LIGHT,PANEL.....		EA		1	*	*	*		REF	114	5
P	O		6610-557-3170	MS28045T1	<96906>	.INDICATOR,INDICATED AIR..... SPEED RPLS-- 6610-487-4090, 6610-526-4397, 6610-526-7895, 6610-557-3171, 6610-564-9351, 6610-663-5799,& 6610-663-8711		EA		1	REF	REF	REF	REF	REF	114	
						ATTACHING PARTS											
			5305-902-1089	MS35202-31	<96906>	.SCREW,MACHINE.....		EA		2	*	*	*		*	114	
			5305-282-5956	AN526DD632R16	<88044>	.SCREW,MACHINE.....		EA		2	*	*	*		*	114	
						---*---											
P	O		6220-243-8138	B4755	<72914>	.LIGHT,PANEL.....		EA		1	*	*	*		REF	114	6
		R	6620-260-2840	8DJ19ACV	<24446>	.INDICATOR,ELECTRICAL-..... TACHOMETER USE UNTIL EXHAUSTED,THEN REQUISITION										114	

(1) SOURCE, MAINT AND REC CODE (a) SOURCE CODE	(b) MAINT LEVEL	(c) REC CODE	(2) FEDERAL STOCK NUMBER	REFERENCE NUMBER	(3) DESCRIPTION	MODELS USABLE ON CH-34C	(4) UNIT OF ISSUE	(5) QTY INC IN UNIT PACK	(6) QTY INC IN UNIT	(7) 30-DAY DS/GS MAINT ALW (a) 1-20	(b) 21-50	(c) 51-100	(8) 1-YR ALW PER 100 EQUIP CNTGCY	(9) DEPOT MAINT ALW PER 100 EQUIP	(10) ILLUSTRATION (a) FIG NO	(b) ITEM NO
					CONTINUED 6680-659-9276										114	
		R	6620-514-5793	8DJ19GAE <24446>	.INDICATOR,ELECTRICAL-..... TACHOMETER USE UNTIL EXHAUSTED,THEN REQUISITION 6680-659-9276										114	
		R	6620-526-5011	8DJ19GAF <24446>	.INDICATOR,ELECTRICAL-..... TACHOMETER USE UNTIL EXHAUSTED,THEN REQUISITION 6680-659-9276										114	
		R	6620-561-5634	8DJ19GAC <24446>	.INDICATOR,TACHOMETER USE... UNTIL EXHAUSTED,THEN REQUISITION 6620-659-9276										114	
		R	6620-663-4261	8DJ19ACV3 <24446>	.INDICATOR,ELECTRICAL-..... TACHOMETER USE UNTIL EXHAUSTED,THEN REQUISITION 6680-659-9276 SEE FIG.114U FOR BREAKDOWN										114	
		R	6620-663-4282	8DJ19GAF6 <24446>	.INDICATOR,ELECTRICAL-..... TACHOMETER USE UNTIL EXHAUSTED,THEN REQUISITION 6680-659-9276 SEE FIG.114P FOR BREAKDOWN										114	
		R	6620-663-7766	8DJ19GAE5 <24446>	.INDICATOR,ELECTRICAL-..... TACHOMETER USE UNTIL EXHAUSTED,THEN REQUISITION 6680-659-9276										114	
		R	6620-767-8151	8DJ67FAC1 <24446>	.INDICATOR,ELECTRICAL-..... TACHOMETER USE UNTIL EXHAUSTED,THEN REQUISITION 6680-659-9276 SEE FIG.114Q FOR BREAKDOWN										114	
		R	6620-771-0697	8DJ19ACV5 <76119>	.INDICATOR-TACHOMETER USE... UNTIL EXHAUSTED,THEN REQUISITION 6680-659-9276										114	
		R	6620-797-3685	8DJ19ACV6 <24446>	.INDICATOR,ELECTRICAL-..... TACHOMETER USE UNTIL EXHAUSTED,THEN REQUISITION 6680-659-9276										114	
		R	6680-690-2929	47-711-018-2 <97499>	.TACHOMETER-INDICATOR USE.... UNTIL EXHAUSTED,THEN REQUISITION 6620-659-9276										114	
P	O	R	6680-659-9276	8DJ67FAB1 <97424>	.INDICATOR,TACHOMETER..... ATTACHING PARTS		EA		1	REF	REF	REF	REF	REF	114	
			5305-902-1089	MS35202-31 <96906>	.SCREW,MACHINE.....		EA		2	*	*	*		*	114	
			5305-282-5956	AN526DD632R16 <88044>	.SCREW,MACHINE..... ---*---		EA		2	*	*	*		*	114	
P	O		6695-578-5284	8948701G2 <97424>	.BEZEL,INSTRUMENT MOUNTING...		EA		1	*	*	*		*	114	
P	H		6210-283-9250	4885 <72914>	.LIGHT,PANEL RPLS--..... 6220-226-9259		EA		1	*	*	*		REF	114	
P	O		6220-226-9259	A6815-24 <72914>	.LIGHT,PANEL.....		EA		1	*		*		*	114	
P	O	R	6620-557-0266	AAF115000 <80465>	.GAGE,ABSOLUTE PRESSURE.....		EA		1	*	REF	REF	REF	REF	114	7

(1) SOURCE, MAINT AND REC CODE (a) SOURCE CODE	(b) MAINT LEVEL	(c) REC CODE	(2) FEDERAL STOCK NUMBER	REFERENCE NUMBER	(3) DESCRIPTION	MODELS USABLE ON CH-34C	(4) UNIT OF ISSUE	(5) QTY INC IN UNIT PACK	(6) QTY INC IN UNIT	(7) 30-DAY DS/GS MAINT ALW (a) 1-20	(b) 21-50	(c) 51-100	(8) 1-YR ALW PER 100 EQUIP CNTGCY	(9) DEPOT MAINT ALW PER 100 EQUIP	(10) ILLUSTRATION (a) FIG NO	(b) ITEM NO
					CONTINUED										114	7
					DIAL INDICATING											
					INTRCH											
P	O	R	6620-561-5646	AW3-10A <61349>	.GAGE,ABSOLUTE PRESSURE.....		EA		1						114	
					INTRCH 6620-557-0266											
					ATTACHING PARTS											
			5340-558-3617	MS28042-1 <96906>	.CLAMP,INSTRUMENT MOUNTING...		EA		1	*	*	*		*	114	
					---*---											
P	O		1650-528-2386	W1700 1-8D <96138>	.VALVE ASSEMBLY.....		EA		1	*	REF	REF	REF	REF	114	8
P	O		6210-519-2653	MS25010-4A <96906>	.LIGHT,PANEL.....		EA		2	*	REF	REF	REF	REF	114	9
P	O		6210-229-5188	A4613 <72914>	.LIGHT,PANEL.....		EA		1	*	*	*		REF	114	10
P	O		6625-544-5899	MS25025-1 <96906>	.METER,ARBITRARY SCALE.....		EA		1	REF	REF	REF	REF	REF	114	
					RPLS--											
			6625-504-2329	Z22-84 <16688>	.METER,ARBITRARY SCALE.....										114	
					RPL-BY 6625-544-5899											
			6625-629-4824	Z22-120 <16688>	.METER,ARBITRARY SCALE.....										114	
					RPL-BY 6625-544-5899											
			6625-631-8060	128308 <65092>	.METER,ARBITRARY SCALE.....										114	
					RPL-BY 6625-544-5899											
					INTRCH											
P	O		6625-500-2218	Z22-76 <16688>	.METER,ARBITRARY SCALE.....		EA		1						114	
					INTRCH 6625-544-5899											
P	O		6625-519-0045	90702 <51596>	.METER,ARBITRARY SCALE.....		EA		1						114	
					INTRCH 6625-544-5899											
					ATTACHING PARTS											
			5305-285-2630	AN526DD632R12 <88044>	.SCREW,MACHINE.....		EA		4	*	*	*		*	114	
					---*---											
X1				Z20-700 <16688>	.BRACKET AND CORE ASSEMBLY...		EA		1						114	
P	O		6220-025-7724	5610-24 <72914>	.LIGHT PANEL.....		EA		1					REF	114	11
		R	6645-557-3241	22322SET12 <79300>	.CLOCK,AIRCRAFT,MECHANICAL...										114	
					RPL-BY 6645-950-8599											
P	O	R	6645-950-8599	400164 <79300>	.CLOCK,AIRCRAFT,MECHANICAL...		EA		1	REF	REF	REF	REF	REF	114	
					RPLS-- 6645-557-3241											
					ATTACHING PARTS											
P	O		5305-719-8681	687 <79300>	.SCREW,INSTRUMENT.....		EA		2					REF	114	
P	O		5330-526-8902	23296 <79300>	.WASHER,METALLIC.....		EA		2					REF	114	
					---*---											
P	O		6220-243-8138	B4755 <72914>	.LIGHT,PANEL.....		EA		1	*	*	*		REF	114	12
P	O	R	6610-558-0480	MS28049-1 <96906>	.INDICATOR,VERTICAL.....		EA		1	REF	REF	REF	REF	REF	114	12A
					VELOCITY											
					RPLS--											
			6610-190-1393	1645-6MA1 <19315>	.INDICATOR,VERTICAL VELOCITY.										114	
					RPL-BY 6610-558-0480											
		R	6610-190-1399	716BK5-046 <89944>	.INDICATOR,VERTICAL VELOCITY.										114	
					RPL-BY 6610-558-0480											
		R	6610-190-1415	639K03 <89944>	.INDICATOR,VERTICAL VELOCITY.										114	
					RPL-BY 6610-558-0480											
		R	6610-190-1425	716V03 <89944>	.INDICATOR,VERTICAL VELOCITY.										114	
					RPL-BY 6610-558-0480											
		R	6610-190-1426	1636-6AA1 <19315>	.INDICATOR,VERTICAL VELOCITY.										114	
					RPL-BY 6610-558-0480											
		R	6610-190-1428	1636-6MB2 <19315>	.INDICATOR,VERTICAL VELOCITY.										114	

(1) SOURCE, MAINT AND REC CODE (a) SOURCE CODE	(b) MAINT LEVEL	(c) REC CODE	(2) FEDERAL STOCK NUMBER	REFERENCE NUMBER	(3) DESCRIPTION	MODELS USABLE ON CH-34C	(4) UNIT OF ISSUE	(5) QTY INC IN UNIT PACK	(6) QTY INC IN UNIT	(7) 30-DAY DS/GS MAINT ALW (a) 1-20	(b) 21-50	(c) 51-100	(8) 1-YR ALW PER 100 EQUIP CNTGCY	(9) DEPOT MAINT ALW PER 100 EQUIP	(10) ILLUSTRATION (a) FIG NO	(b) ITEM NO
					CONTINUED										114	
					RPL-BY 6610-558-0480											
		R	6610-222-8957	1636-6GB1 <06840>	.INDICATOR,VERTICAL VELOCITY.										114	
					RPL-BY 6610-558-0480											
		R	6610-526-7965	716CU4-053 <89944>	.INDICATOR,VERTICAL VELOCITY.										114	
					RPL-BY 6610-558-0480											
		R	6610-526-7966	716BU8-050 <89944>	.INDICATOR,VERTICAL VELOCITY.										114	
					RPL-BY 6610-558-0480											
		R	6610-526-7967	716BU4-052 <89944>	.INDICATOR,VERTICAL VELOCITY.										114	
					RPL-BY 6610-558-0480											
					SEE FIG.114D FOR BREAKDOWN											
		R	6610-530-0028	RC60 <98810>	.INDICATOR,VERTICAL VELOCITY.										114	
					RPL-BY 6610-558-0480											
					SEE FIG.114T FOR BREAKDOWN											
		R	6610-531-4499	1636-6KB1 <19315>	.INDICATOR,VERTICAL VELOCITY.										114	
					RPL-BY 6610-558-0480											
		R	6610-557-3410	AN5825-7 <88044>	.INDICATOR,VERTICAL VELOCITY.										114	
					RPL-BY 6610-558-0480											
		R	6610-663-4138	1636-6HB1 <19315>	.INDICATOR,VERTICAL VELOCITY.										114	
					RPL-BY 6610-558-0480											
					SEE FIG.114S FOR BREAKDOWN											
		R	6610-663-4148	1648-6UA6-1 <19315>	.INDICATOR,VERTICAL VELOCITY.										114	
					RPL-BY 6610-558-0480											
		R	6610-663-4153	716BK8-036 <89944>	.INDICATOR.VERTICAL VELOCITY.										114	
					RPL-BY 6610-558-0480											
					SEE FIG.114D FOR BREAKDOWN											
		R	6610-663-4156	716BU8-036 <89944>	.INDICATOR,VERTICAL VELOCITY.										114	
					RPL-BY 6610-558-0480											
					SEE FIG.114D FOR BREAKDOWN											
					INTRCH											
P	O	R	6610-530-1363	DO-7163-04-052 <89944>	.INDICATOR,VERTICAL VELOCITY.		EA		1						114	
					INTRCH 6610-558-0480											
					SEE FIG.114B FOR BREAKDOWN											
P	O	R	6610-551-0673	RC60MS <98810>	.INDICATOR,VERTICAL VELOCITY.		EA		1						114	
					INTRCH 6610-558-0480											
					ATTACHING PARTS											
			5305-902-1089	MS35202-31 <96906>	.SCREW,MACHINE.....		EA		2	*	*	*		*	114	
			5305-282-5956	AN526DD632R16 <88044>	.SCREW,MACHINE.....		EA		1	*	*	*		*	114	
					---*---											
P	H		6210-283-9878	4790 <72914>	.LIGHT,PANEL.....		EA		1	*	*	*		REF	114	13
P	O		6220-243-8138	B4755 <72914>	.LIGHT,PANEL.....		EA		1	*	*	*		REF	114	
					ATTACHING PARTS											
			5305-925-4849	AN505DD6-20 <88044>	.SCREW,MACHINE.....		GR		2	*	*	*		*	114	
			5305-060-7900	AN526DD632R20 <88044>	.SCREW,MACHINE.....		EA		1	*	*	*		*	114	
			5305-902-1089	MS35202-31 <96906>	.SCREW,MACHINE.....		EA		2	*	*	*		*	114	
			5305-282-5956	AN526DD632R16 <88044>	.SCREW,MACHINE.....		EA		1	*	*	*		*	114	
					---*---											
P	O		5930-655-1514	MS35058-22 <96906>	.SWITCH,TOGGLE.....		EA		1	*	*	*		*	114	14
P	O		6605-584-4227	AN5823-1 <88044>	.FORM,PRINTED.....		EA		1	REF	REF	REF		*	114	15
P	O		9905-634-1473	AN5800-1 <88044>	.HOLDER ASSEMBLY,CARD.....		EA		1	*	*	*		REF	114	
					ATTACHING PARTS											
			5305-052-5968	MS35202-14 <96906>	.SCREW,MACHINE.....				2	*	*	*		*	114	

(1) SOURCE, MAINT AND REC CODE (a) SOURCE CODE	(b) MAINT LEVEL	(c) REC CODE	(2) FEDERAL STOCK NUMBER	REFERENCE NUMBER	(3) DESCRIPTION	MODELS USABLE ON CH-34C	(4) UNIT OF ISSUE	(5) QTY INC IN UNIT PACK	(6) QTY INC IN UNIT	(7) 30-DAY DS GS MAINT ALW (a) 1-20	(b) 21-50	(c) 51-100	(8) 1-YR ALW PER 100 EQUIP CNTGCY	(9) DEPOT MAINT ALW PER 100 EQUIP	(10) ILLUSTRATION (a) FIG NO	(b) ITEM NO
			5310-857-5548	MS21044D04	<96906> .NUT,SELF-LOCKING,HEXAGON.... ---*---		EA		2	*	*	*		*	114	
P	O		6210-284-0289	MS25041-4	<96906> .LIGHT,INDICATOR.....		EA		1	*	*	2		*	114	16
P	O		6220-243-8138	B4755	<72914> .LIGHT,PANEL.....		EA		1	*	*	*		REF	114	17
P	O	R	6610-580-7922	MS28024-3	<96906> .INDICATOR,TURN AND SLIP..... RPLS--		EA		1	*	REF	REF	REF	REF	114	
		R	6610-247-9350	B48D	<79318> .INDICATOR,TURN AND SLIP..... RPL-BY 6610-580-7922 SEE FIG.114G FOR BREAKDOWN										114	
		R	6610-388-0068	RCA2	<80510> .INDICATOR,TURN AND SLIP..... RPL-BY 6610-580-7922 SEE FIG.114E FOR BREAKDOWN										114	
		R	6610-398-0059	RCA1	<80510> .INDICATOR,TURN AND SLIP..... RPL-BY 6610-580-7922										114	
		R	6610-515-5843	B4A	<79318> .INDICATOR,TURN AND SLIP..... RPL-BY 6610-580-7922										114	
		R	6610-515-5845	B4B	<79318> .INDICATOR,TURN AND SLIP..... RPL-BY 6610-580-7922										114	
		R	6610-526-4716	B4BK	<79318> .INDICATOR,TURN AND SLIP..... RPL-BY 6610-580-7922										114	
		R	6610-557-3114	MS28024-1	<96906> .INDICATOR,TURN AND SLIP..... RPL-BY 6610-580-7922										114	
		R	6610-659-9275	AAF261150	<80510> .INDICATOR,TURN AND SLIP..... RPL-BY 6610-580-7922										114	
		R	6610-663-4115	RCA2W	<80510> .INDICATOR,TURN AND SLIP..... RPL-BY 6610-580-7922										114	
		R	6610-663-4136	B4	<79318> .INDICATOR,TURN AND SLIP..... RPL-BY 6610-580-7922 INTRCH										114	
P	O	R	6610-585-1145	A1600	<80510> .INDICATOR,TURN AND SLIP..... INTRCH 6610-580-7922		EA		1						114	
P	O	R	6610-585-1145	A1600A	<80510> .INDICATOR,TURN AND SLIP..... INTRCH 6610-580-7922		EA		1						114	
P	O	R	6610-089-6950	3935	<80510> .INDICTOR,TURN AND SLIP..... INTRH 6610-580-7922		EA		1						114	17
					ATTACHING PARTS											
			5305-902-1089	MS35202-31	<96906> .SCREW,MACHINE.....		EA		2	*	*	*		*	114	
			5305-282-5956	AN526DD632R16	<88044> .SCREW,MACHINE..... ---*---		EA		2	*	*	*		*	114	
P	O		6220-243-8138	B4755	<72914> .LIGHT,PANEL.....		EA		1	*	*	*		REF	114	18
P	O	R	6610-752-8689	MS28044L1A	<96906> .ALTIMETER,PRESSURE..... RPLS--		EA		1	2	3	7	82	*	114	
		R	6610-224-1278	671K03	<89944> .ALTIMETER,PRESSURE..... RPL-BY 6610-752-8689										114	
		R	6610-224-1284	671CK010	<34237> .ALTIMETER,PRESSURE..... RPL-BY 6610-752-8689										114	
		R	6610-232-9473	671CP19017	<34237> .ALTIMETER,PRESSURE..... RPL-BY 6610-752-8689										114	
		R	6610-232-9475	671BK01	<89944> .ALTIMETER,PRESSURE..... RPL-BY 6610-752-8689										114	
		R	6610-232-9485	671BK011	<89944> .ALTIMETER,PRESSURE..... RPL-BY 6610-752-8689										114	

(1) SOURCE, MAINT AND REC CODE (a) SOURCE CODE	(b) MAINT LEVEL	(c) REC CODE	(2) FEDERAL STOCK NUMBER	REFERENCE NUMBER	(3) DESCRIPTION	MODELS USABLE ON CH-34C	(4) UNIT OF ISSUE	(5) QTY INC IN UNIT PACK	(6) QTY INC IN UNIT	(7) 30 DAY DS GS MAINT ALW (a) 1-20	(b) 27-50	(c) 51-100	(8) 1-YR ALW PER 100 EQUIP CNTGCY	(9) DEPOT MAINT ALW PER 100 EQUIP	(10) ILLUSTRATION (a) FIG NO	(b) ITEM NO
		R	6610-251-0366	671CPU19-015	<89944> .ALTIMETER,PRESSURE..... RPL-BY 6610-752-8689										114	
		R	6610-251-0367	987-10-031	<89944> .ALTIMETER,PRESSURE..... RPL-BY 6610-752-8689										114	
		R	6610-251-0369	671BK900C	<89944> .ALTIMETER,PRESSURE..... RPL-BY 6610-752-8689										114	
		R	6610-251-0374	940U03	<89944> .ALTIMETER,PRESSURE..... RPL-BY 6610-752-8689										114	
		R	6610-388-0030	1845X4-03	<89944> .ALTIMETER,PRESSURE..... RPL-BY 6610-752-8689										114	
		R	6610-487-4094	671BK07C	<89944> .ALTIMETER,PRESSURE..... RPL-BY 6610-752-8689										114	
		R	6610-487-4101	709K01	<89944> .ALTIMETER,PRESSURE..... RPL-BY 6610-752-8689										114	
		R	6610-514-4175	671BK03	<89944> .ALTIMETER,PRESSURE..... RPL-BY 6610-752-8689										114	
		R	6610-514-4176	671CLU4-035	<89944> .ALTIMETER,PRESSURE..... RPL-BY 6610-752-8689										114	
		R	6610-514-4178	671CLU4-038	<34237> .ALTIMETER,PRESSURE..... RPL-BY 6610-752-8689										114	
		R	6610-514-4183	671CPX4-037	<89944> .ALTIMETER,PRESSURE..... RPL-BY 6610-752-8689										114	
		R	6610-515-5393	A50MB	<98810> .ALTIMETER,PRESSURE..... RPL-BY 6610-752-8689										114	
		R	6610-526-4785	987-23-031	<89944> .ALTIMETER,PRESSURE..... RPL-BY 6610-752-8689										114	
		R	6610-526-4786	671CP8-016	<89944> .ALTIMETER,PRESSURE..... RPL-BY 6610-752-8689										114	
		R	6610-526-4791	671CK010D	<89944> .ALTIMETER,PRESSURE..... RPL-BY 6610-752-8689										114	
		R	6610-526-5761	671BK010M	<89944> .ALTIMETER,PRESSURE..... RPL-BY 6610-752-8689										114	
		R	6610-526-6053	671CPX4-038D	<89944> .ALTIMETER,PRESSURE..... RPL-BY 6610-752-8689										114	
		R	6610-526-6054	671CLU4-035D	<89944> .ALTIMETER,PRESSURE..... RPL-BY 6610-752-8689										114	
		R	6610-526-6055	671BK01D	<89944> .ALTIMETER,PRESSURE..... RPL-BY 6610-752-8689										114	
		R	6610-526-6066	671CP8-016D	<89944> .ALTIMETER,PRESSURE..... RPL-BY 6610-752-8689										114	
		R	6610-526-6067	671CPU19-015D	<89944> .ALTIMETER,PRESSURE..... RPL-BY 6610-752-8689										114	
		R	6610-526-6068	671BU010D	<89944> .ALTIMETER,PRESSURE..... RPL-BY 6610-752-8689										114	
		R	6610-526-6075	671K01D	<89944> .ALTIMETER,PRESSURE..... RPL-BY 6610-752-8689										114	
		R	6610-526-6079	709K01D	<89944> .ALTIMETER,PRESSURE..... RPL-BY 6610-752-8689										114	
		R	6610-526-6080	940U03D	<89944> .ALTIMETER,PRESSURE..... RPL-BY 6610-752-8689										114	
		R	6610-526-6081	1845X4-03D	<89944> .ALTIMETER,PRESSURE..... RPL-BY 6610-752-8689										114	

(1) SOURCE, MAINT AND REC CODE (a) SOURCE CODE	(b) MAINT LEVEL	(c) REC CODE	(2) FEDERAL STOCK NUMBER	REFERENCE NUMBER	(3) DESCRIPTION	MODELS USABLE ON CH-34C	(4) UNIT OF ISSUE	(5) QTY INC IN UNIT PACK	(6) QTY INC IN UNIT	(7) 30-DAY DS GS MAINT ALW (a) 1-20	(b) 21-50	(c) 51-100	(8) 1-YR ALW PER 100 EQUIP CNTGCY	(9) DEPOT MAINT ALW PER 100 EQUIP	(10) ILLUSTRATION (a) FIG NO	(b) ITEM NO
			6610-526-6082	80000D	<13943> .ALTIMETER,PRESSURE..... RPL-BY 6610-752-8689										114	
		R	6610-526-6083	671CPX4-037D	<89944> .ALTIMETER,PRESSURE..... RPL-BY 6610-752-8689										114	
		R	6610-526-6084	671BK07CD	<89944> .ALTIMETER,PRESSURE..... RPL-BY 6610-752-8689										114	
		R	6610-526-6085	671BK010D	<89944> .ALTIMETER,PRESSURE..... RPL-BY 6610-752-8689										114	
		R	6610-526-6087	671BK07D	<89944> .ALTIMETER,PRESSURE..... RPL-BY 6610-752-8689										114	
		R	6610-526-6088	671BK011D	<89944> .ALTIMETER,PRESSURE..... RPL-BY 6610-752-8689										114	
		R	6610-526-6092	671CPX4-038	<89944> .ALTIMETER,PRESSURE..... RPL-BY 6610-752-8689										114	
		R	6610-530-3955	671BK010	<89944> .ALTIMETER,PRESSURE..... RPL-BY 6610-752-8689										114	
			6610-536-1433	80000	<13943> .ALTIMETER,PRESSURE..... RPL-BY 6610-752-8689										114	
		R	6610-550-6590	671BK010DL	<89944> .ALTIMETER,PRESSURE..... RPL-BY 6610-752-8689										114	
		R	6610-653-8458	671K03D	<89944> .ALTIMETER,PRESSURE..... RPL-BY 6610-752-8689										114	
		R	6610-557-3404	AN5760-4B	<88044> .ALTIMETER,PRESSURE..... RPL-BY 6610-752-8689										114	
		R	6610-557-3405	AN5760L4B	<88044> .ALTIMETER,PRESSURE..... RPL-BY 6610-752-8689										114	
		R	6610-560-2494	671BX010D	<34237> .ALTIMETER,PRESSURE..... RPL-BY 6610-752-8689										114	
		R	6610-566-9684	671BU010	<89944> .ALTIMETER,PRESSURE..... RPL-BY 6610-752-8689										114	
		R	6610-752-8689	MS28044LI	<96906> .ALTIMETER,PRESSURE..... RPL-BY 6610-752-8689		EA			REF	REF	REF	REF		114	
		R	6610-663-7749	671CKL010	<89944> .ALTIMETER,PRESSURE..... RPL-BY 6610-752-8689										114	
		R	6610-772-7857	450694	<77294> .ALTIMETER,PRESSURE..... RPL-BY 6610-752-8689										114	
		R	6610-773-2722	671EPX4-037D	<89944> .ALTIMETER,PRESSURE..... RPL-BY 6610-752-8689										114	
		R	6610-805-4164	MS28044-1	<96906> .ALTIMETER,PRESSURE..... RPL-BY 6610-752-8689										114	
		R	6610-963-5783	C2893410007	<89944> .ALTIMETER,PRESSURE..... RPL-BY 6610-752-8689										114	
		R	6685-514-6273	671CPX10-051	<89944> .ALTIMETER,PRESSURE..... RPL-BY 6610-752-8689										114	
					ATTACHING PARTS											
			5305-902-1089	MS35202-31	<96906> .SCREW,MACHINE.....		EA		2	*	*	*		*	114	
			5305-282-5956	AN526DD632R16	<88044> .SCREW,MACHINE.....		EA		1	*	*	*		*	114	
					---*---											
		R	6610-232-9483	671BK07	<89944> .ALTIMETER,PRESSURE USE..... UNTIL EXHAUSTED,NO REPLACEMENT		EA		1	*	*	*			114	
		R	6610-663-7740	671CPU8-030	<89944> .ALTIMETER,PRESSURE USE.....		EA		1	*	*	*			114	

(1) SOURCE, MAINT AND REC CODE (a) SOURCE CODE	(b) MAINT LEVEL	(c) REC LEVEL	(2) FEDERAL STOCK NUMBER	REFERENCE NUMBER	(3) DESCRIPTION	MODELS USABLE ON CH-34C	(4) UNIT OF ISSUE	(5) QTY INC IN UNIT PACK	(6) QTY INC IN UNIT	(7) 30-DAY DS GS MAINT ALW (a) 1-20	(b) 21-50	(c) 51-100	(8) 1-YR ALW PER 100 EQUIP CNTGCY	(9) DEPOT MAINT ALW PER 100 EQUIP	(10) ILLUSTRATION (a) FIG NO	(b) ITEM NO
					CONTINUED										114	
					UNTIL EXHAUSTED,NO REPLACEMENT											
		R	6610-526-6056	671BK900CD	<89944> .ALTIMETER,PRESSURE USE.....		EA		1	*	*	*			114	
					UNTIL EXHAUSTED,NO REPLACEMENT											
		R	6610-526-6076	671CLU4-038D	<89944> .ALTIMETER,PRESSURE USE.....		EA		1	*	*	*			114	
					UNTIL EXHAUSTED,NO REPLACEMENT											
		R	6610-526-6078	671CPU8-030D	<89944> .ALTIMETER,PRESSURE USE.....		EA		1	*	*	*			114	
					UNTIL EXHAUSTED,NO REPLACEMENT											
		R	6610-536-4888	671BK03D	<89944> .ALTIMETER,PRESSURE USE.....		EA		1	*	*	*			114	
					UNTIL EXHAUSTED,NO REPLACEMENT											
		R	6610-608-1907	A28934-04-002	<89944> .ALTIMETER,PRESSURE USE.....		EA		1	*	*	*			114	
					UNTIL EXHAUSTED,NO REPLACEMENT											
			6610-631-5687	671CP19-017D	<89944> .ALTIMETER,PRESSURE USE.....		EA		1	*	*	*			114	
					UNTIL EXHAUSTED,NO REPLACEMENT											
P	O		6210-025-7714	84789	<72914> .LIGHT,PANEL.....		EA		1	*	*	*		REF	114	19
X2	F		1560-560-5328	S14-45-1062	<78286> .PLATE,COVER,INSTRUMENT PANEL		EA		1	*	*	*		*	114	
P	O		6220-243-8138	B4755	<72914> .LIGHT,PANEL.....		EA		1	*	*	*		REF	114	
P	O	R	6605-188-9025	15700	<81100> .INDICATOR,INDUCTION COMPASS.		EA		1	*	*	REF	REF	REF	114	
					ATTACHING PARTS											
			5305-052-9501	MS35219-60	<96906> .SCREW,MACHINE.....		EA		2	*	*	*		*	114	
			5305-688-2342	N80P16018C6	<03538> .SCREW,MACHINE.....		EA		2	*	*	*		*	114	
			5305-995-3442	MS35207-268	<96906> .SCREW,MACHINE.....				2	*	*	*		*	114	
					---*---											
P	F		6210-504-0167	7919	<72914> .LIGHT,PANEL RPLS--.....		EA		1	REF	REF	REF		REF	114	20
					6220-295-1108,											
					6220-299-4065,&											
					6220-504-0167											
P	O		6240-299-4742	1495	<24446> .LAMP,INCANDESCENT.....		EA		1	*	*	*		REF	114	
P	O		6620-557-0363	MS28010-3	<96906> .INDICATOR,OIL PRESSURE.....		EA		1	REF	REF	REF	REF	REF	114	21
					ATTACHING PARTS											
			5340-558-3617	MS28042-1	<96906> .CLAMP,INSTRUMENT MOUNTING...		EA		1	*	*	*		*	114	
					---*---											
			6685-487-4263	33204	<80099> .INDICATOR,TEMPERATURE.....										114	
					RPL-BY 6685-557-0370											
			6685-514-5327	MS28009-2	<96906> .INDICATOR,TEMPERATURE.....										114	
					RPL-BY 6685-557-0370											
			6685-779-8345	162B3A	<06840> .INDICATOR,TEMPERATURE.....										114	
					RPL-BY 6685-557-0370											
P	O		6685-557-0370	MS28009-1	<96906> .INDICATOR,TEMPERATURE,.....		EA		1	*	*	REF	REF	REF	114	22
					ELECTRIC RPLS--											
					6685-487-4263,											
					6685-514-5327,&											
					6685-779-8345											
					ATTACHING PARTS											
			5340-558-3617	MS28042-1	<96906> .CLAMP,INSTRUMENT MOUNTING...		EA		1	*	*	*		*	114	

(1) SOURCE, MAINT AND REC CODE (a) SOURCE CODE	(b) MAINT LEVEL	(c) REC CODE	(2) FEDERAL STOCK NUMBER	REFERENCE NUMBER	(3) DESCRIPTION	MODELS USABLE ON CH-34C	(4) UNIT OF ISSUE	(5) QTY INC IN UNIT PACK	(6) QTY INC IN UNIT	(7) 30-DAY DS GS MAINT ALW (a) 1-20	(b) 21-50	(c) 51-100	(8) 1-YR ALW PER 100 EQUIP CNTGCY	(9) DEPOT MAINT ALW PER 100 EQUIP	(10) ILLUSTRATION (a) FIG NO	(b) ITEM NO
					CONTINUED										114	
					---*---											
P	O		6685-557-0371	MS28004-1 <96906>	.INDICATOR,TEMPERATURE,..... ELECTRIC		EA		1	*	*	*	REF	REF	114	23
					ATTACHING PARTS											
			5340-558-3617	MS28042-1 <96906>	.CLAMP,INSTRUMENT MOUNTING...		EA		1	*	*	*		*	114	
					---*---											
P	O		6685-553-4726	M16533TYPEG10 <81349>	.INDICATOR,TEMPERATURE,..... ELECTRIC RESISTANCE		EA		1					REF	114	24
					RPLS--											
			6615-603-9002	AN5791 <88044>	.INDICATOR,TEMPERATURE..... RPL-BY 6685-553-4726										114	
			6685-487-4274	35350 <80099>	.INDICATOR,TEMPERATURE..... RPL-BY 6685-553-4726										114	
			6685-487-4455	47838P <35913>	.INDICATOR,TEMPERATURE..... RPL-BY 6685-553-4726										114	
			6685-487-4458	47851 <35918>	.INDICATOR,TEMPERATURE..... RPL-BY 6685-553-4726										114	
			6685-487-4611	125439 <65092>	.INDICATOR,TEMPERATURE..... RPL-BY 6685-553-4726										114	
			6685-514-5331	132702 <65092>	.INDICATOR,TEMPERATURE..... RPL-BY 6685-553-4726										114	
			6685-526-4559	147813A <35918>	.INDICATOR,TEMPERATURE..... RPL-BY 6685-553-4726										114	
			6685-536-5013	47838P2 <35918>	.INDICATOR,TEMPERATURE..... RPL-BY 6685-553-4726										114	
					INTRCH											
P	O		6685-487-4441	14787 <35918>	.INDICATOR,TEMPERATURE..... INTRCH 6685-553-4726		EA		1						114	
P	O		6685-526-4431	147830 <35918>	.INDICATOR,TEMPERATURE..... INTRCH 6685-553-4726		EA		1						114	
P	O		6685-526-6121	132875 <65092>	.INDICATOR,TEMPERATURE..... INTRCH 6685-553-4726		EA		1						114	
P	O		6685-526-7728	14787A <35918>	.INDICATOR,TEMPERATURE..... INTRCH 6685-553-4726		EA		1						114	
P	O		6685-526-7730	147830A <35918>	.INDICATOR,TEMPERATURE..... INTRCH 6685-553-4726 SEE FIG.114L FOR BREAKDOWN		EA		1						114	
P	O		6685-526-7731	137660 <65092>	.INDICATOR,TEMPERATURE..... INTRCH 6685-557-0372		EA		1						114	
					ATTACHING PARTS											
			5340-558-3617	MS28042-1 <96906>	.CLAMP,INSTRUMENT MOUNTING...		EA		1	*	*	*		*	114	
					---*---											
P	O		6685-557-0215	25101A3781C1 <96906>	.INDICATOR,PRESSURE RPLS--.. 6685-056-0542, 6685-514-5070, 6685-526-4547, 6685-526-5868, 6685-526-7179,& 6685-531-2432		EA		2	REF	REF	REF	REF	REF	114	25
					ATTACHING PARTS											
			5340-558-3617	MS28042-1 <96906>	.CLAMP,INSTRUMENT MOUNTING...		EA		1	*	*	*		*	114	

(1) SOURCE, MAINT AND REC CODE (a) SOURCE CODE	(b) MAINT LEVEL	(c) REC CODE	(2) FEDERAL STOCK NUMBER	REFERENCE NUMBER	(3) DESCRIPTION	MODELS USABLE ON CH-34C	(4) UNIT OF ISSUE	(5) QTY INC IN UNIT PACK	(6) QTY INC IN UNIT	(7) 30-DAY DS/GS MAINT ALW (a) 1-20	(b) 21-50	(c) 51-100	(8) 1-YR ALW PER 100 EQUIP CNTGCY	(9) DEPOT MAINT ALW PER 100 EQUIP	(10) ILLUSTRATION (a) FIG NO	(b) ITEM NO
					CONTINUED										114	
					---*---											
P	O	R	6680-566-6660	169-08A19 <83296>	.SELECTOR SWITCH SIMULATOR...		EA		1	*	REF	REF	REF	REF	114	25A
					ATTACHING PARTS											
			5340-558-3617	MS28042-1 <96906>	.CLAMP,INSTRUMENT MOUNTING...		EA		1	*	*	*		*	114	
					---*---											
P	D		6680-566-6661	169-56 <83296>	..HOUSING ASSEMBLY,SELECTOR..		EA		1					REF	114	
P	D		6680-076-7331	169-32-113 <83296>	...SHELL.....		EA		1					REF	114	
P	H		5935-533-9647	169-49 <83296>	..BACKPLATE AND SPACER.....		EA		1	*	*	*		REF	114	
					ASSEMBLY											
P	D		6680-651-8005	169-55 <83296>	...SPACER.....		EA		3					REF	114	
P	H		5910-538-2318	1101-98-7 <97485>	..CAPACITOR,FIXED,CERAMIC....		EA		1	*	*	*		REF	114	
					DIELECTRIC											
P	H		5910-538-2316	1101-98-9 <72982>	..CAPACITOR.....		EA		1	*	*	*		REF	114	
P	H		5910-069-6295	1101-98-8 <72982>	..CAPACITOR.....		EA		1	*	*	*		REF	114	
P	H		5910-609-7460	1101-96-1 <83296>	..CAPACITOR,FIXED,CERAMIC....		EA		3	*	*	*		REF	114	
P	O		5355-579-2896	AN3219-1 <88044>	..KNOB.....		EA		1	*	*	*		REF	114	
P	O		6210-212-7889	4750 <72914>	.LIGHT,PANEL.....		EA		1	*	*	*		*	114	26
			6625-121-1244	1162967 <79500>	.VOLTMETER RPL-BY.....										114	
					6625-235-4782											
P	O		6625-235-4782	AN3203V30 <88044>	.VOLTMETER RPLS--.....		EA		1	*	2	2	19	*	114	
					6625-512-1244											
					ATTACHING PARTS											
			5305-150-9345	AN505DD6-12 <88044>	.SCREW,MACHINE.....		GR		2	*	*	*		*	114	
			5305-285-2630	AN526DD632R12 <88044>	.SCREW,MACHINE.....		EA		2	*	*	*		*	114	
					---*---											
P	O		6210-025-7716	B4850 <72914>	..LIGHT,PANEL.....		EA		3	*	*	*		*	114	
P	O		6620-557-0363	MS28010-3 <96906>	.INDICATOR,OIL PRESSURE.....		EA		1	REF	REF	REF	REF	REF	114	27
					ATTACHING PARTS											
			5340-558-3617	MS28042-1 <96906>	.CLAMP,INSTRUMENT MOUNTING...		EA		1	*	*	*		*	114	
					---*---											
P	O		6685-557-0370	MS28009-1 <96906>	.INDICATOR,TEMPERATURE,.....		EA		1	*	*	REF	REF	REF	114	28
					ELECTRIC RPLS--											
					6685-487-4263,											
					6685-514-5327,&											
					6685-779-8345											
					ATTACHING PARTS											
			5340-558-3617	MS28042-1 <96906>	.CLAMP,INSTRUMENT MOUNTING...		EA		1	*	*	*		*	114	
					---*---											
P	O	R	6680-526-5078	162-0251-873 <97485>	.INDICATOR,LIQUID QUANTITY...		EA		1	REF	REF	REF	REF	REF	114	28A
					ATTACHING PARTS											
			5340-558-3617	MS28042-1 <96906>	.CLAMP,INSTRUMENT MOUNTING...		EA		1	*	*	*		*	114	
					---*---											
P	O		6620-514-5334	MS28010-1 <96906>	.INDICATOR,PRESSURE.....		EA		1	*	REF	REF	REF	REF	114	29
					ATTACHING PARTS											
			5340-558-3617	MS28042-1 <96906>	.CLAMP,INSTRUMENT MOUNTING...		EA		1	*	*	*		*	114	
					---*---											
P	O		5930-296-6242	D202L5 <81640>	.SWITCH,PUSH.....		EA		1	*	*	*		REF	114	30
P	O		6685-557-0370	MS28009-1 <96906>	.INDICATOR,TEMPERATURE,.....		EA		1	*	*	REF	REF	REF	114	31
					ELECTRIC RPLS--											
					6685-487-4263,											
					6685-514-5327,&											

(1) SOURCE, MAINT AND REC CODE (a) SOURCE CODE	(b) MAINT LEVEL	(c) REC CODE	(2) FEDERAL STOCK NUMBER	REFERENCE NUMBER	(3) DESCRIPTION	MODELS USABLE ON CH-34C	(4) UNIT OF ISSUE	(5) QTY INC IN UNIT PACK	(6) QTY INC IN UNIT	(7) 30-DAY DS 'GS MAINT ALW (a) 1-20	(b) 21-50	(c) 51-100	(8) 1-YR ALW PER 100 EQUIP CNTGCY	(9) DEPOT MAINT ALW PER 100 EQUIP	(10) ILLUSTRATION (a) FIG NO	(b) ITEM NO
					CONTINUED										114	31
					6685-779-8345											
					ATTACHING PARTS											
			5340-558-3617	MS28042-1	<96906> .CLAMP,MOUNTING.....		EA		1	*	*	*		*	114	
					---*---											
P	O		6210-519-2653	MS25010-4A	<96906> .LIGHT,PANEL.....		EA		1	*	REF	REF	REF	REF	114	
P	O		6210-519-0448	MS25041-6	<96906> .LIGHT ASSEMBLY.....		EA		1	*	*	*		REF	114	32
P	O		6210-519-2653	MS25010-4A	<96906> .LIGHT,PANEL.....		EA		1	*	REF	REF	REF	REF	114	
X2	F		1560-868-9786	S1645-65403	<78286> .PLATE,OIL PRESSURE.....		EA		1	*	*	*		*	114	
			6240-155-8714	MS25231-313	<96906> .LAMP,INCANDESCENT.....		EA		1	REF	REF	REF		*	114	33
P	O		6605-584-4227	AN5823-1	<88044> .FORM,PRINTED.....		EA		1	REF	REF	REF		REF	114	35
P	O		9905-634-1473	AN5800-1	<88044> .HOLDER ASSEMBLY,CARD.....		EA		1	*	*	*		REF	114	
					ATTACHING PARTS											
			5305-052-5968	MS35202-14	<96906> .SCREW,MACHINE.....				2	*	*	*		*	114	
			5310-857-5548	MS21044D04	<96906> .NUT,SELF-LOCKING,HEXAGON....		EA		2	*	*	*		*	114	
					---*---											
P	O		6220-025-7724	5610-24	<72914> .LIGHT,PANEL.....		EA		1					REF	114	36
P	O	R	6645-557-3241	22322SET12	<79300> .CLOCK,AIRCRAFT,MECHANICAL...		EA		1					REF	114	
P	O		6605-584-4227	AN5823-1	<88044> .FORM,PRINTED.....		EA		1	REF	REF	REF		REF	114	37
P	O		9905-634-1473	AN5800-1	<88044> .HOLDER ASSEMBLY,CARD.....		EA		1	*	*	*		REF	114	
					ATTACHING PARTS											
			5305-052-5968	MS35202-14	<96906> .SCREW,MACHINE.....				2	*	*	*		*	114	
			5310-857-5548	MS21044D04	<96906> .NUT,SELF-LOCKING,HEXAGON....		EA		2	*	*	*		*	114	
					---*---											
P	O		6220-243-8138	B4755	<72914> .LIGHT,PANEL.....		EA		1	*	*	*		REF	114	
P	O	R	6610-558-0480	MS28049-1	<96906> .INDICATOR,VERTICAL VELOCITY.		EA		1	REF	REF	REF	REF	REF	114	
					ATTACHING PARTS											
			5305-902-1089	MS35202-31	<96906> .SCREW,MACHINE.....		EA		2	*	*	*		*	114	
			5305-282-5956	AN526DD632R16	<88044> .SCREW,MACHINE.....		EA		1	*	*	*		*	114	
					---*---											
P	O		6210-025-7714	B4789	<72914> .LIGHT,PANEL.....		EA		1	*	*	*		REF	114	38
P	O	R	6605-188-9025	15700	<81100> .INDICATOR,INDUCTION COMPASS.		EA		1	*	*	REF	REF	REF	114	
					ATTACHING PARTS											
			5305-052-9501	MS35219-60	<96906> .SCREW,MACHINE.....		EA		2	*	*	*		*	114	
P	H		6210-283-9878	4790	<72914> .LIGHT,PANEL.....		EA		1	*	*	*		REF	114	39
P	O	R	6610-731-7969	MS17313-1	<96906> .INDICATOR,ATTITUDE.....		EA		1	*	*	*		*	114	39A
					RPLS--											
		R	6610-255-2713	664234	<56232> .INDICATOR,ATTITUDE.....										114	
					RPL-BY 6610-731-7969											
		R	6610-388-0048	14602-1JA1	<06840> .INDICATOR,ATTITUDE.....										114	
					RPL-BY 6610-731-7969											
					SEE FIG.113E FOR BREAKDOWN											
		R	6610-388-0049	14602-1JB1	<19315> .INDICATOR,ATTITUDE.....										114	
					RPL-BY 6610-731-7969											
		R	6610-390-8441	14602-1JC1	<19315> .INDICATOR,ATTITUDE.....										114	
					RPL-BY 6610-731-7969											
		R	6610-515-5824	686531	<56232> .INDICATOR,ATTITUDE.....										114	
					RPL-BY 6610-731-7969											
		R	6610-526-4709	14607-1SA1	<19315> .INDICATOR,ATTITUDE.....										114	
					RPL-BY 6610-731-7969											
		R	6610-526-4717	14602-1JE1	<19315> .INDICATOR,ATTITUDE.....										114	
					RPLS-BY 6610-731-7969											

(1) SOURCE, MAINT AND REC CODE (a) SOURCE CODE	(b) MAINT CODE	(c) REC CODE	(2) FEDERAL STOCK NUMBER	REFERENCE NUMBER	(3) DESCRIPTION	MODELS USABLE ON CH-34C	(4) UNIT OF ISSUE	(5) QTY INC IN UNIT PACK	(6) QTY INC IN UNIT	(7) 30-DAY DS GS MAINT ALW (a) 1-20	(b) 21-50	(c) 51-100	(8) 1-YR ALW PER 100 EQUIP CNTGCY	(9) DEPOT MAINT ALW PER 100 EQUIP	(10) ILLUSTRATION (a) FIG NO	(b) ITEM NO
					CONTINUED										114	
					SEE FIG.113E FOR BREAKDOWN											
		R	6610-526-5913	14602-1JB1M <06840>	.INDICATOR,ATTITUDE.....										114	
					RPL-BY 6610-731-7969											
		R	6610-526-6765	14613-1AKA4 <06840>	.INDICATOR,ATTITUDE.....										114	
					RPL-BY 6610-731-7969											
					SEE FIG.113E FOR BREAKDOWN											
		R	6610-557-3101	J8 <81349>	.INDICATOR,ATTITUDE.....										114	
					RPL-BY 6610-731-7969											
		R	6610-624-7038	684471-6 <56232>	.INDICATOR,ATTITUDE.....										114	
					RPL-BY 6610-731-7969											
		R	6610-641-3015	14602-1JA1M <19315>	.INDICATOR,ATTITUDE.....										114	
					RPL-BY 6610-731-7969											
		R	6610-663-8798	14602-1JD1 <19315>	.INDICATOR,ATTITUDE.....										114	
					RPL-BY 6610-731-7969											
		R	6610-663-8800	14602-1JF1 <19315>	.INDICATOR,ATTITUDE.....										114	
					RPL-BY 6610-731-7969											
		R	6610-699-5531	673391 <56232>	.INDICATOR,ATTITUDE.....										114	
					RPL-BY 6610-731-7969											
		R	6610-918-3376	146021JK1 <19315>	.INDICATOR,ATTITUDE.....										114	
					RPL-BY 6610-731-7969											
		R	6610-924-7784	14602-1JK1 <06840>	.INDICATOR,ATTITUDE.....										114	
					RPL-BY 6610-731-7969											
					ATTACHING PARTS											
			5305-925-4849	AN505DD6-20 <88044>	.SCREW,MACHINE.....		GR		2	*	*	*		*	114	
			5305-060-7900	AN526DD632R2D <88044>	.SCREW,MACHINE.....		EA		1	*	*	*		*	114	
					---*---											
P	O	R	6610-752-8689	MS28044L1A <96906>	.ALTIMETER,PRESSURE.....		EA		1	REF	REF	REF	REF	REF	114	40
					ATTACHING PARTS											
			5305-902-1089	MS35202-31 <96906>	.SCREW,MACHINE.....		EA		2	*	*	*		*	114	
			5305-282-5956	AN526DD632R16 <88044>	.SCREW,MACHINE.....		EA		1	*	*	*		*	114	
					---*---											
P	O	R	6610-580-7922	MS28024-3 <96906>	.INDICATOR,TURN AND SLIP.....		EA		1	*	REF	REF	REF	REF	114	41
					ATTACHING PARTS											
			5305-902-1089	MS35202-31 <96906>	.SCREW,MACHINE.....		EA		2	*	*	*		*	114	
			5305-282-5956	AN526DD632R16 <88044>	.SCREW,MACHINE.....		EA		2	*	*	*		*	114	
					---*---											
P	O		6220-226-9259	A6815-24 <72914>	.LIGHT,PANEL.....		EA		1	*	*	*		*	114	
P	O	R	6620-557-0266	AAF115000 <80465>	.GAGE,ABSOLUTE PRESSURE,.....		EA		1	*	REF	REF	REF	REF	114	42
					DIAL INDICATING											
					INTRCH											
P	O	R	6620-561-5646	AW3-10A <61349>	.GAGE,ABSOLUTE PRESSURE.....		EA		1						114	
					INTRCH 6620-557-0266											
					ATTACHING PARTS											
			5340-579-6359	MS28042-2 <96906>	.CLAMP,INSTRUMENT MOUNTING...		EA		1	*	*	*		*	114	
					---*---											
P	O		6220-243-8138	B4755 <72914>	.LIGHT,PANEL.....		EA		1	*	*	*		REF	114	43
P	O	R	6680-659-9276	8DJ67FAB1 <97424>	.INDICATOR,TACHOMETER.....		EA		1	REF	REF	REF	REF	REF	114	
					ATTACHING PARTS											
			5305-902-1089	MS35202-31 <96906>	.SCREW,MACHINE.....		EA		2	*	*	*		*	114	
			5305-282-5956	AN526DD632R16 <88044>	.SCREW,MACHINE.....		EA		2	*	*	*		*	114	
					---*---											

(1) SOURCE, MAINT AND REC CODE (a) SOURCE CODE	(b) MAINT LEVEL	(c) REC CODE	(2) FEDERAL STOCK NUMBER	REFERENCE NUMBER	(3) DESCRIPTION	MODELS USABLE ON CH-34C	(4) UNIT OF ISSUE	(5) QTY INC IN UNIT PACK	(6) QTY INC IN UNIT	(7) 30-DAY DS GS MAINT ALW (a) 1-20	(b) 21-50	(c) 51-100	(8) 1-YR ALW PER 100 EQUIP CNTGCY	(9) DEPOT MAINT ALW PER 100 EQUIP	(10) ILLUSTRATION (a) FIG NO	(b) ITEM NO
P	O		6220-243-8138	B4755	<72914> .LIGHT,PANEL.....		EA		1	*	*	*		REF	114	44
P	O		6610-557-3170	MS28045T1	<96906> .INDICATOR,INDICATED AIR..... SPEED RPLS-- 6610-487-4090, 6610-526-4397, 6610-526-7895, 6610-557-3171, 6610-564-9351, 6610-663-5799,& 6610-663-8711		EA		1	REF	REF	REF	REF	REF	114	
			5305-902-1089	MS35202-31	<96906> .SCREW,MACHINE..... ATTACHING PARTS		EA		2	*	*	*		*	114	
			5305-282-5956	AN526DD632R16	<88044> .SCREW,MACHINE..... ---*---		EA		2	*	*	*		*	114	
P	O		1680-572-5424	BUA9860-1	<22040> .CARD,AIRSPEED CORRECTION.....		EA		1	REF	REF	REF		REF	114	45
P	O		9905-205-1606	FNA324	<22040> .HOLDER,CORRECTION CARD..... ATTACHING PARTS		EA		1					REF	114	
			5305-253-5615	MS21318-21	<96906> .SCREW,MACHINE..... ---*---		BX		2	*	*	*		*	114	
P	O		6220-243-8138	B4755	<72914> .LIGHT,PANEL.....		EA		1	*	*	*		REF	114	46
				ID637ARN59	<00783> .INDICATOR..... ATTACHING PARTS		EA		1						114	
			5305-902-1089	MS35202-31	<96906> .SCREW,MACHINE.....		EA		2	*	*	*		*	114	
			5305-282-5956	AN526DD632R16	<88044> .SCREW,MACHINE..... ---*---		EA		1	*	*	*		*	114	
P	O		6220-243-8138	B4755	<72914> .LIGHT,PANEL.....		EA		1	*	*	*		REF	114	47
				ID48ARN	<36378> .INDICATOR..... ATTACHING PARTS		EA		1						114	
			5305-902-1089	MS35202-31	<96906> .SCREW,MACHINE.....		EA		2	*	*	*		*	114	
			5305-282-5956	AN526DD632R16	<88044> .SCREW,MACHINE..... ---*---		EA		1	*	*	*		*	114	
X2	F			S14-60-2527-2	<78286> .PANEL ASSEMBLY,RADIO..... CONTROL AN/ARC-44 U/O PN S1645-65500-2		EA		1						114	48
X2	F			S14-60-2527-1	<78286> .PANEL ASSEMBLY,RADIO..... CONTROL AN/ARC-44 U/O NHA PN S1645-65500-1, S1645-65012		EA		1						114	
				S1645-65510-2	<78286> .PANEL ASSEMBLY,RIVETED.....		EA		1						114	
P	O	R	6605-557-0348	V8	<81349> .INDICATOR,HEADING..... RPLS--		EA		1	2	2	4		*	114	48A
		R	6605-514-3654	667258-21	<56232> .INDICATOR,HEADING..... RPL-BY 6605-557-0348 INTRCH										114	
P	O	R	6605-514-3658	603654	<56232> .INDICATOR,HEADING..... INTRCH 6605-557-0348		EA		1						114	
P	O	R	6605-514-3670	675313B	<56232> .INDICATOR,HEADING..... INTRCH 6605-557-0348		EA		1						114	
P	O	R	6605-515-6459	18520	<88818> .INDICATOR,HEADING..... INTRCH 6605-557-0348		EA		1						114	
X2	F			S1645-65204	<78286> ..BRACKET ASSEMBLY..... ATTACHING PARTS		EA		1						114	49

(1) SOURCE, MAINT AND REC CODE (a) SOURCE CODE	(b) MAINT LEVEL	(c) REC CODE	(2) FEDERAL STOCK NUMBER	(3) DESCRIPTION REFERENCE NUMBER			MODELS USABLE ON CH-34C	(4) UNIT OF ISSUE	(5) QTY INC IN UNIT PACK	(6) QTY INC IN UNIT	(7) 30-DAY DS GS MAINT ALW (a) 1-20	(b) 21-50	(c) 51-100	(8) 1 YR ALW PER 100 EQUIP CNTGCY	(9) DEPOT MAINT ALW PER 100 EQUIP	(10) ILLUSTRATION (a) FIG NO	(b) ITEM NO
				MS20470B4	<96906>	..RIVET.....		EA		6						114	50
				---*---													
				S1645-65512	<78286>	..STIFFENER ASSEMBLY.....		EA		1						114	51
P	O		5325-505-4798	212-12	<71286>	...RECEPTACLE,TURN LOCK..... FASTENER		EA		11	*	*	*		REF	114	52
P	F		1560-672-4810	S1645-65227	<78286>	...BRACKET ASSEMBLY,STIFFENER ATTACHING PARTS		EA		2	*	*	*		REF	114	54
				MS20470AD4	<96906>	...RIVET.....		EA		14						114	55
				---*---													
MF	F			S1645-65227-2	<78286>	....CLIP..... ATTACHING PARTS		EA		1						114	56
				MS20470AD4	<96906>	....RIVET.....		EA		4						114	57
				---*---													
				MS20470AD4	<96906>	...RIVET.....		EA		5						114	59
				---*---													
MF	F			S1645-65213	<78286>	...CHANNEL..... ATTACHING PARTS		EA		1						114	60
				MS20470AD4	<96906>	...RIVET.....		EA		16						114	61
				---*---													
AF	F			S1645-65218	<78286>	...BRACKET ASSEMBLY..... ATTACHING PARTS		EA		2						114	62
				MS20470AD4	<96906>	...RIVET.....		EA		6						114	63
				---*---													
		R	6610-251-0366	671CPU19-015	<89944>	ALTIMETER,PRESSURE SEE..... FIG.114 FOR NHA		EA		1						114A	
		R	6610-388-0030	1845X4-03	<89944>	ALTIMETER,PRESSURE SEE..... FIG.114 FOR NHA		EA		1						114A	
		R	6610-514-4183	671CPX4-037	<89944>	ALTIMETER,PRESSURE SEE..... FIG.114 FOR NHA		EA		1						114A	
		R	6610-526-4786	671CP8-016	<89944>	ALTIMETER,PRESSURE SEE..... FIG.114 FOR NHA		EA		1						114A	
		R	6610-526-6092	671CPX4-038	<89944>	ALTIMETER,PRESSURE SEE..... FIG.114 FOR NHA		EA		1						114A	
		R	6610-526-6066	671CP8-016D	<89944>	ALTIMETER,PRESSURE SEE..... FIG.114 FOR NHA		EA		1						114A	
		R	6610-526-6083	671CPX4-037D	<89944>	ALTIMETER,PRESSURE SEE..... FIG.114 FOR NHA		EA		1						114A	
		R	6610-526-6054	671CLU4-035D	<89944>	ALTIMETER,PRESSURE SEE..... FIG.114 FOR NHA		EA		1						114A	
		R	6610-526-6067	671CPU19-015D	<89944>	ALTIMETER,PRESSURE SEE..... FIG.114 FOR NHA		EA		1						114A	
		R	6610-526-6081	1845X4-03D	<89944>	ALTIMETER,PRESSURE SEE..... FIG.114 FOR NHA		EA		1						114A	
		R	6610-526-6053	671CPX4-038D	<89944>	ALTIMETER,PRESSURE SEE..... FIG.114 FOR NHA		EA		1						114A	
P	H		5355-180-8443	371-14	<89944>	.KNOB.....		EA		1	*	*	*		*	114A	1

(1) SOURCE, MAINT AND REC CODE (a) SOURCE CODE	(b) MAINT LEVEL	(c) REC CODE	(2) FEDERAL STOCK NUMBER	REFERENCE NUMBER		(3) DESCRIPTION	MODELS USABLE ON CH-34C	(4) UNIT OF ISSUE	(5) QTY INC IN UNIT PACK	(6) QTY INC IN UNIT	(7) 30-DAY DS GS MAINT ALW (a) 1-20	(b) 21-50	(c) 51-100	(8) 5-YR ALW PER 100 EQUIP CNTGCY	(9) DEPOT MAINT ALW PER 100 EQUIP	(10) ILLUSTRATION (a) FIG NO	(b) ITEM NO
P	H		5310-275-1745	371-13B	<89944>	.NUT,PLAIN,HEXAGON.....		EA		1	*	*	*		*	114A	2
P	H		5305-033-6173	371-18C	<89944>	.SCREW,MACHINE.....		EA		1	*	*	*		*	114A	3
P	H		5307-371-0838	671CK4B	<89944>	.STUD,LOCKING.....		EA		1	*	*	*		*	114A	4
P	H		6930-443-8915	671CK902B	<89944>	.FLANGE ASSEMBLY.....NOTE 2		EA		1	*	*	*		*	114A	5
P	H		6610-936-8534	671CK3C	<89944>	.FLANGE MOUNTING.NOTE 3,4 & 5		EA		1	*	*	*		*	114A	
P	H		6685-613-5403	671CPU3	<89944>	.FLANGE,MOUNTING.....NOTE 1		EA		1	*	*	*		*	114A	
						ATTACHING PARTS											
P	H		5305-579-1704	61401060320	<89944>	.SCREW,MACHINE.....		EA		1	*	*	*		*	114A	6
P	H		5305-285-8658	FFIL311SS8PX	<89944>	.SCREW,MACHINE.....		EA		1	*	*	*		*	114A	7
P	H		5305-206-8082	371-128C	<89944>	.SCREW,MACHINE.....		EA		2	*	*	*		*	114A	8
P	H		5310-264-1995	KR3SS4PX	<89944>	.WASHER,LOCK.....		EA		1	*	*	*		*	114A	9
						---*---											
P	H		5310-183-7998	371-22B	<89944>	.WASHER,FLAT.....		EA		1	*	*	*		*	114A	10
P	H		5340-235-1607	371-12	<89944>	.SPRING,HELICAL,COMPRESSION..		EA		1	*	*	*		*	114A	11
P	H		5340-183-7997	371-21B	<89944>	.SHIM.....		EA		1	*	*	*		*	114A	12
P	H		5330-641-7517	477KN43	<89944>	.WASHER,NONMETALLIC.....		EA		1	*	*	*		*	114A	13
			5355-538-6384	MS28105-17	<96906>	.WINDOW,DIAL.....		EA		1	*	*	*		*	114A	14
P	H		6610-141-3577	371-61B	<89944>	.GASKET.....		EA		1	*	*	2		*	114A	15
P	H		5355-668-6032	P1287	<98810>	.POINTER,DIAL.....		EA		1	*	*	*		*	114A	16
P	H		5355-668-6032	P1287	<98810>	.POINTER,DIAL.....		EA		1	*	*	*		*	114A	
P	H		5355-668-6030	P1283	<98810>	.POINTER,DIAL.....		EA		2	*	*	*		*	114A	17
P	H		6685-520-9675	P1122-1	<98810>	.POINTER AND DISK ASSEMBLY...		EA		1	*	*	*		*	114A	18
P	H		6610-034-3706	642K950B	<89944>	.RING ASSEMBLY,GASKET.....		EA		1	*	*	*		*	114A	19
						NOTE 2,3,4 & 5											
P	H		6610-049-5128	472K950B	<89944>	.RING ASSEMBLY.....NOTE 1		EA		1	*	*	*		*	114A	
P	H		6685-329-0858	371K118B15	<89944>	.RING,SETTING..NOTE 2,3,4 & 5		EA		AR	*	*	*		*	114A	20
P	H		6610-584-4165	671CPX037-1	<89944>	.DIAL,SCALE.....NOTE 3		EA		1	*	*	*		*	114A	
P	H		6610-505-3913	P2012	<98810>	.DIAL,SCALE.....		EA		1	*	*	*		*	114A	21
						ATTACHING PARTS											
P	H		5305-297-2173	X30	<89944>	.SCREW,MACHINE.....		EA		2	*	*	*		REF	114A	22
P	H		6685-180-9073	371-58	<89944>	.PIN,DIAL,LOCATING.....		EA		2	*	*	*		*	114A	23
						NOTE 2,3,4 & 5											
						---*---											
P	H		6685-329-0856	371-30B	<89944>	.SPACER.....		EA		1	*	*	*		REF	114A	24
P	H		6610-095-8261	371-127B	<89944>	.SHIM.....		EA		1	*	*	*		REF	114A	25
X2	H			371K24B3	<89944>	.SHUTTER,INDICATOR.....		EA		1						114A	26
						NOTE 2,3 & 5											
P	H		6610-225-0254	371K25B4	<89944>	.SHUTTER.....NOTE 4		EA		1	*	*	*		*	114A	
P	H		6610-049-5103	1845-24	<89944>	.SHUTTER.....NOTE 1		EA		1	*	*	*		*	114A	
P	H		6610-443-8910	371K904C2	<89944>	.DIAL ASSEMBLY.....		EA		1	*	*	*		REF	114A	27
P	H		6685-329-0345	371-20B	<89944>	.GEAR,SPUR.....		EA		1	*	*	*		*	114A	28
P	H		6685-703-6819	371-903	<89944>	.GEAR ASSEMBLY.....		EA		1	*	*	*		REF	114A	29
P	H		6685-704-1523	371-914	<89944>	.GEAR CLUSTER,SPUR.....		EA		1	*	*	*		REF	114A	30
P	H		6685-704-1524	371-913	<89944>	.GEAR ASSEMBLY.....		EA		1	*	*	*		REF	114A	31
P	H		5315-181-6314	371S54	<89944>	.PIN,STRAIGHT,HEADLESS.....		EA		1	*	*	*		REF	114A	32
P	H		5340-181-5814	371ST	<89944>	.RING,RETAINING.....		EA		1	*	*	*		REF	114A	33
P	H		6685-166-7277	371S904	<89944>	.MECHANISM ASSEMBLY,TOP.....		EA		1	*	*	*		*	114A	34
						PLATE SEE FIG.114A <SHEET											
						2 OF 2> FOR BREAKDOWN											
						NOTE 2,3,4 & 5											
X2	H			1845-904	<89944>	.MECHANISM ASSEMBLY,TOP.....		EA		1						114A	
						PLATE SEE FIG.114A <SHEET											

(1) SOURCE, MAINT AND REC CODE (a) SOURCE CODE	(b) MAINT LEVEL	(c) REC CODE	(2) FEDERAL STOCK NUMBER	REFERENCE NUMBER	(3) DESCRIPTION	MODELS USABLE ON CH-34C	(4) UNIT OF ISSUE	(5) QTY INC IN UNIT PACK	(6) QTY INC IN UNIT	(7) 30-DAY DS GS MAINT ALW (a) 1-20	(b) 21-50	(c) 51-100	(8) 1-YR ALW PER 100 EQUIP CNTGCY	(9) DEPOT MAINT ALW PER 100 EQUIP	(10) ILLUSTRATION (a) FIG NO	(b) ITEM NO
					CONTINUED 2 OF 2> FOR BREAKDOWN NOTE 1										114A	
P	H		6685-181-5354	371-53 <89944>	.PINION,CENTER.....		EA		1	*	*	*		REF	114A	35
P	H		6685-019-8056	940-901 <89944>	.MECHANISM ASSEMBLY SEE..... FIG.114A <SHEET 2 OF 2> FOR BREAKDOWN		EA		1	*	*	*		*	114A	36
P	H		6685-334-6861	371-46 <89944>	.SPRING,RING.....		EA		1	*	*	*		*	114A	37
P	H		5340-598-2203	371S25 <89944>	.RING,RETAINING.....		EA		1	*	*	*		REF	114A	38
P	H		5340-282-4971	371-11 <89944>	.RING,RETAINING.....		EA		1	*	*	*		REF	114A	39
P	H		5315-537-1301	371-10 <89944>	.PIN,STRAIGHT,HEADLESS.....		EA		1	*	*	*		REF	114A	40
P	H		5355-326-0695	371-9B <89944>	.KNOB,STEM ADJUSTMENT.....		EA		1	*	*	*		*	114A	41
P	H		5330-887-4662	371-45B <89944>	.WASHER,LEATHER.....		EA		1	*	*	*		*	114A	42
P	H		6685-181-6075	371-8 <89944>	.PINION,KNOB STEM ADJUSTING..		EA		1	*	*	*		*	114A	43
P	H		6685-180-8915	371-16 <89944>	.SHAFT,IDLER.....		EA		1	*	*	*		*	114A	44
P	H		5310-487-5605	371K121 <89944>	.WASHER,SPRING TENSION.....		EA		1	*	*	*		REF	114A	45
P	H		6610-487-5590	371-15 <89944>	.GEAR,IDLER....NOTE 2,3,4 & 5		EA		1	*	*	*		*	114A	46
P	H		6610-287-4709	1845-15 <89944>	.GEAR,SPUR.....NOTE 1		EA		1	*	*	*		REF	114A	
P	H		6685-536-4889	671BK1D <89944>	.CASE,MECHANISM.....NOTE 2		EA		1	*	*	*		*	114A	47
X2	H			671U18 <89944>	.CASE.....NOTE 1,3,4 & 5		EA		1						114A	
P	H		6685-166-7277	371S904 <89944>	.MECHANISM ASSEMBLY,TOP..... PLATE NOTE 2,3,4&5		EA		1	*	*	*		*	114A	48
X2	H			1845-904 <89944>	.MECHANISM ASSEMBLY,TOP..... PLATE NOTE 1		EA		1						114A	
P	H		6685-181-5369	371-911 <89944>	..HUB AND WHEEL ASSEMBLY.....		EA		1	*	*	*		REF	114A	49
P	H		6685-181-5684	371-907 <89944>	..PLATE ASSEMBLY,TOP BEARING. ATTACHING PARTS		EA		1	*	*	*		REF	114A	50
P	H		5305-033-6174	371-60B <89944>	..SCREW,SHOULDER..... ---*---		EA		3	*	*	*		REF	114A	51
P	H		6610-371-0704	371-41 <89944>	...GEAR,PINION.....		EA		1	*	*	*		*	114A	52
P	H		6685-181-5368	371-909 <89944>	...WHEEL AND HUB ASSEMBLY....		EA		1	*	*	*		REF	114A	53
P	H		6685-181-4265	371-52 <89944>	...HANDSTAFF,SHORT HAND.....		EA		1	*	*	*		REF	114A	54
P	H		6685-181-5414	371-908 <89944>	...WHEEL ASSEMBLY,ALTIMETER..		EA		1	*	*	*		REF	114A	55
P	H		6685-181-5685	371-906 <89944>	...PLATE AND BUSHING ASSEMBLY		EA		1	*	*	*		*	114A	56
P	H		6685-181-5415	371-910 <89944>	..WHEEL ASSEMBLY,ALTIMETER...		EA		1	*	*	*		REF	114A	57
X2	H			371S905 <89944>	..PLATE ASSEMBLY,TOP..... NOTE 2,3,4 & 5		EA		1						114A	58
P	H		6610-690-3570	1845-905 <89944>	..PLATE ASSEMBLY,TOP...NOTE 1		EA		1	*	*	*		*	114A	
P	H		6685-019-8056	940-901 <89944>	.MECHANISM ASSEMBLY.....		EA		1	*	*	*		*	114A	59
P	H		6685-167-0940	371-923 <89944>	..SETTING ASSEMBLY,WHEEL..... JEWEL		EA		1	*	*	*		*	114A	60
P	H		6685-181-6074	371-73B <89944>	..PINION,HANDSTAFF.....		EA		1	*	*	*		*	114A	61
P	H		5315-514-1434	371-80 <89944>	..PIN,STRAIGHT,HEADED.....		EA		1	*	*	*		*	114A	62
P	H		1280-570-9096	940-71 <89944>	..LINK,DIAPHRAGM.....		EA		1	*	*	*		*	114A	63
P	H		5841-675-6493	371-72 <89944>	..ARM,CALIBRATION.....		EA		1	*	*	*		*	114A	64
P	H		5315-038-0342	671B90B <89944>	..PIN,TAPERED,PLAIN.....		EA		1	*	*	*		*	114A	65
P	H		5305-487-5600	371-78 <89944>	..SETSCREW.....		EA		1	*	*	*		*	114A	66
P	H		6685-025-1874	940-915 <89944>	..SHAFT ASSEMBLY.....		EA		1	*	*	*		*	114A	67
P	H		6685-181-9925	671-73D <89944>	...HAIRSPRING,ROCKING SHAFT..		EA		1	*	*	*		*	114A	68
P	H		6610-315-8757	371-79 <89944>	...PIVOT,DRILL ROD.....		EA		1	*	*	*		*	114A	69
P	H		6685-181-4214	371-96 <89944>	...JEWEL,SMALL.....		EA		1	*	*	2		*	114A	70
P	H		5305-217-8094	FF1L003 <89944>	...SCREW,MACHINE.....		EA		2	*	*	*		*	114A	71

(1) SOURCE, MAINT AND REC CODE (a) SOURCE CODE	(b) MAINT LEVEL	(c) REC CODE	(2) FEDERAL STOCK NUMBER	REFERENCE NUMBER		(3) DESCRIPTION	MODELS USABLE ON CH-34C	(4) UNIT OF ISSUE	(5) QTY INC IN UNIT PACK	(6) QTY INC IN UNIT	(7) 30-DAY DS GS MAINT ALW (a) 1-20	(b) 21-50	(c) 51-100	(8) 1-YR ALW PER 100 EQUIP CNTGCY	(9) DEPOT MAINT ALW PER 100 EQUIP	(10) ILLUSTRATION (a) FIG NO	(b) ITEM NO
P	H		5305-217-8147	671-87B	<89944>	...SCREW,MACHINE.....		EA		1	*	*	*		*	114A	72
P	H		6610-601-4510	940-129	<89944>	...COUNTERWEIGHT,ALTIMETER...		EA		1	*	*	*		*	114A	73
P	H		5315-527-0159	20632	<89944>	..PIN,TAPERED,PLAIN.....		EA		1	*	*	*		*	114A	75
P	H		6685-304-6931	940-931	<89944>	..BRIDGE ASSEMBLY..... ATTACHING PARTS		EA		1	*	*	*		*	114A	76
P	H		5305-537-1302	371-90B	<89944>	..SCREW,EXTERNALLY RELIEVED.. BODY		EA		3	*	*	*		*	114A	77
						---*---											
P	H		6685-181-4214	371-96	<89944>	...JEWEL,SMALL.....		EA		1	*	*	REF		*	114A	78
P	H		6685-586-8971	940-932	<89944>	..WHEEL AND HAIRSPRING..... ASSEMBLY		EA		1	*	*	*		*	114A	80
P	H		6685-180-8551	371-77	<89944>	...HAIRSPRING,MECHANISM.....		EA		1	*	*	*		*	114A	81
P	H		6610-535-1325	940-80	<89944>	...DISK,TRANSMITTER.....		EA		1	*	*	*		*	114A	82
P	H		6685-703-7591	671-924	<89944>	...GEAR.....		EA		1	*	*	*		*	114A	83
X1				371-75	<89944>	....WHEEL.....		EA		1						114A	84
P	H		5310-523-5607	176-71	<89944>	....WASHER,FLAT.....		EA		1	*	*	*		*	114A	85
P	H		6610-028-2221	671-74B	<89944>	....PINION,INTERMEDIATE.....		EA		1	*	*	*		*	114A	86
P	H		6685-167-0940	371-923	<89944>	..SETTING ASSEMBLY,WHEEL..... JEWEL		EA		1	*	*	*		*	114A	87
P	H		6610-570-9091	709-909C	<89944>	..ARM AND BALANCE ASSEMBLY...		EA		1	*	*	*		*	114A	88
P	H		5315-514-1434	371-80	<89944>	...PIN,STRAIGHT,HEADED.....		EA		1	*	*	*		*	114A	89
P	H		5841-675-6493	371-72	<89944>	...ARM CALIBRATION.....		EA		2	*	*	*		*	114A	90
P	H		6685-035-5792	709-6	<89944>	...LINK,BALANCE.....		EA		1	*	*	*		*	114A	91
P	H		6685-304-6925	371P933B	<89944>	...BALANCE.....		EA		1	*	*	*		*	114A	92
P	H		6610-976-3371	40289320010	<89944>	..DIAPHRAGM ADJUSTING..... SPRING ASSEMBLY		EA		1	*	*	*		*	114A	93
P	H		6610-753-2104	709-911B	<89944>	..BODY ASSEMBLY,MECHANISM....		EA		1	*	*	*		*	114A	94
P	H		6660-327-6454	371-95	<89944>	...BEARING,JEWEL.....		EA		1	*	*	*		*	114A	95
P	H		6685-181-4214	371-96	<89944>	...JEWEL,SMALL.....		EA		1	*	*	REF		*	114A	96
P	H		5305-207-3065	FFIL007	<89944>	...SCREW,MACHINE.....		EA		2	*	*	*		*	114A	97
P	H		5305-443-2671	FFIL207	<89944>	...SCREW,MACHINE.....		EA		1	*	*	*		*	114A	98
P	H		5305-207-3084	FFIL610	<89944>	...SCREW,DIAPHRAGM CLAMPING..		EA		1	*	*	*		*	114A	99
						NOTE 1											
						U/O 6610-388-0030											
						NOTE 2											
						U/O 6610-526-4786											
						NOTE 3											
						U/O 6610-514-4183											
						NOTE 4											
						U/O 6610-251-0366											
						NOTE 5											
						U/O 6610-526-6092											
P	O	R	6610-530-1363	007163-04-052	<89944>	INDICATOR,VERTICAL VELOCITY.. SEE FIG.113 FOR NHA		EA		1						114B	
P	H		6695-654-9770	716BU3	<89944>	.BEZEL INSTRUMENT MOUNTING... ATTACHING PARTS		EA		1	*	*	*		*	114B	1

(1) SOURCE, MAINT AND REC CODE (a) SOURCE CODE	(b) MAINT LEVEL	(c) REC CODE	(2) FEDERAL STOCK NUMBER	REFERENCE NUMBER		(3) DESCRIPTION	MODELS USABLE ON CH-34C	(4) UNIT OF ISSUE	(5) QTY INC IN UNIT PACK	(6) QTY INC IN UNIT	(7) 30-DAY DS GS MAINT ALW (a) 1-20	(b) 21-50	(c) 51-100	(8) 1 YR ALW PER 100 EQUIP CNTGCY	(9) DEPOT MAINT ALW PER 100 EQU'P	(10) ILLUSTRATION (a) FIG NO	(b) ITEM NO
P	H		5305-955-9542	FFIL3151-2SS8PX	<89944>	.SCREW,MACHINE.....		EA		1	*	*	*		*	114B	2
P	H		5305-572-9402	FFIL3161-2SS8PX	<89944>	.SCREW,MACHINE.....		EA		7	*	*	*		*	114B	3
P	H		5310-637-2476	KL3SS4PX	<89944>	.WASHER,LOCK.....		EA		7	*	*	*		*	114B	4
						---*---											
P	H		5330-530-3516	590BK48	<89944>	.GASKET.....		EA		AR	*	*	*		*	114B	5
			5355-538-6382	MS28105-16	<96906>	.WINDOW,DIAL.....		VX		1	*	*	*		*	114B	6
P	H		5340-487-5671	645K6-2	<89944>	.GASKET,SEALING.....		EA		1	*	*	*		*	114B	7
X1				87071630010	<89944>	.MECHANISM ASSEMBLY SEE..... FIG.114B <SHEET 2 OF 2> FOR BREAKDOWN		EA		1						114B	8
						ATTACHING PARTS											
P	H		5305-978-2176	FFIL413CSS8PX	<89944>	.SCREW,MACHINE.....		EA		5	*	*	*		*	114B	9
						---*---											
P	H		5330-530-3522	716-18B	<89944>	.WASHER,NONMETALLIC.....		EA		1	*	*	*		*	114B	10
P	H		6610-589-0027	35071630010	<89944>	.PINION ADJUSTMENT.....		EA		1	*	*	*		*	114B	11
P	H		5310-596-0603	865D19	<89944>	.WASHER,SPRING TENSION.....		EA		1	*	*	*		*	114B	12
P	H		5330-141-3445	716-7	<89944>	.WASHER,NONMETALLIC.....		EA		1	*	*	*		*	114B	13
P	H		6610-019-5453	85071630080	<89944>	.COVER ASSEMBLY,MECHANICAL...		EA		1	*	*	*		*	114B	14
P	H		6610-586-6309	58071630010	<89944>	.SPRING,COMPRESSION.....		EA		1	*	*	*		*	114B	15
P	H		5330-433-8437	716-10B	<89944>	.PACKING PREFORMED.....		EA		1	*	*	*		*	114B	16
P	H		6610-019-5504	81071630030	<89944>	.NAMEPLATE.....		EA		1	*	*	*		*	114B	17
						ATTACHING PARTS											
			5305-253-5606	MS21318-7	<96906>	.SCREW,DRIVE.....		HD		2	*	*	*		*	114B	18
						---*---											
P	H		6610-019-5449	85071630031	<89944>	.CASE ASSEMBLY.....		EA		1	*	*	*		*	114B	
P	H		5310-025-8009	671C134	<89944>	..WASHER,FLAT.....		EA		1	*	*	*		*	114B	19
P	H		6615-558-8068	671C133	<89944>	..FILTER PARTICULATE.....		EA		1	*	*	*		*	114B	20
P	H		6610-019-5442	50071630021	<89944>	..CASE,INDICATOR,CLIMB.....		EA		1	*	*	*		*	114B	21
X1				87071630010	<89944>	.MECHANISM ASSEMBLY.....		EA		1						114B	
P	H		6610-661-1797	545-91986	<89944>	..HAND ASSEMBLY.....		EA		1	*	*	*		*	114B	22
P	H		6610-019-5503	716CU051-1	<89944>	..DIAL ASSEMBLY.....		EA		1	*	*	*		*	114B	
X1				716CU051-1-1	<89944>	...DIAL,INNER.....		EA		1						114B	23
						ATTACHING PARTS											
P	H		5305-443-2748	X31	<89944>	...SCREW,MACHINE.....		EA		2	*	*	*		*	114B	24
						---*---											
X1				716CU051-1-2	<89944>	...DIAL,OUTER.....		EA		1						114B	25
						ATTACHING PARTS											
P	H		5305-443-2748	X31	<89944>	...SCREW,MACHINE.....		EA		2	*	*	*		*	114B	26
						---*---											
P	H		6610-546-4613	716B907	<89944>	..BRIDGE ASSEMBLY,FRONT.....		EA		1	*	*	*		*	114B	
						ATTACHING PARTS											
P	H		5305-219-7948	639-21-2	<89944>	..SCREW,SHOULDER.....		EA		2	*	*	*		*	114B	27
						---*---											
P	H		6660-327-6454	371-95	<89944>	...BEARING JEWEL.....		EA		1	*	*	*		*	114B	28
X1				716B16	<89944>	...BRIDGE FRONT.....		EA		1						114B	29
P	H		6610-181-4271	296-909B	<89944>	..HANDSTAFF AND MAGNET.....		EA		1	*	*	*		*	114B	30
						ASSEMBLY											
P	H		6610-659-0737	716-918	<89944>	..ORIFICE ASSEMBLY.....		EA		1	*	*	*		*	114B	31
P	H		5330-684-3418	PB19099	<89944>	..WASHER,NONMETALLIC.....		EA		2	*	*	*		*	114B	33
P	H		6610-589-0029	716C4	<89944>	..FLANGE,MECHANISM MOUNTING..		EA		1	*	*	*		*	114B	34
						ATTACHING PARTS											
P	H		5305-207-3676	FFIL409B	<89944>	..SCREW,MACHINE.....		EA		3	*	*	*		*	114B	35

(1) SOURCE, MAINT AND REC CODE (a) SOURCE CODE	(b) MAINT LEVEL	(c) REC CODE	(2) FEDERAL STOCK NUMBER	(3) DESCRIPTION REFERENCE NUMBER			MODELS USABLE ON CH-34C	(4) UNIT OF ISSUE	(5) QTY INC IN UNIT PACK	(6) QTY INC IN UNIT	(7) 30-DAY DS GS MAINT ALW (a) 1-20	(b) 21-50	(c) 51-100	(8) 1-YR ALW PER 100 EQUIP CNTGCY	(9) DEPOT MAINT ALW PER 100 EQUIP	(10) ILLUSTRATION (a) FIG NO	(b) ITEM NO
P	H		5310-209-6474	716-31	<89944>	..WASHER,FLAT.....		EA		3	*	*	*		*	114B	36
						---*---											
P	H		6610-586-6311	716C7	<89944>	..SPACER.....		EA		1	*	*	*		*	114B	37
P	H		5305-371-0798	614K61	<89944>	..SCREW.....		EA		1	*	*	*		*	114B	38
P	H		5310-190-2885	366B14	<89944>	..WASHER,NONMETALLIC.....		EA		1	*	*	*		*	114B	39
P	H		5330-443-2979	366B105	<89944>	..WASHER,NONMETALLIC.....		EA		1	*	*	*		*	114B	40
P	H		5330-599-1469	366B19	<89944>	..WASHER,NONMETALLIC.....		EA		1	*	*	*		*	114B	41
P	H		6610-349-6414	716-915	<89944>	..DIAPHRAGM AND VALVE..... ASSEMBLY		EA		1	*	*	*		*	114B	42
P	H		6610-019-5473	716-14	<89944>	..BRACKET.....		EA		1	*	*	*		*	114B	43
P	H		5315-514-1434	371-80	<89944>	..PIN,STRAIGHT,HEADED.....		EA		1	*	*	*		*	114B	44
P	H		6610-545-5575	716-914	<89944>	..ADJUSTMENT ASSEMBLY,..... DIAPHRAGM ATTACHING PARTS		EA		1	*	*	*		*	114B	
P	H		5305-550-3180	FFIL415	<89944>	..SCREW,MACHINE.....		EA		2	*	*	*		*	114B	45
						---*---											
X1				716-40B	<89944>	...SETSCREW.....		EA		1						114B	46
X1				716-920	<89944>	...PLATE ASSEMBLY,DIAPHRAGM..		EA		1						114B	47
X1				716-35	<89944>	...SPRING,DIAPHRAGM..... ATTACHING PARTS		EA		1						114B	48
P	H		5305-207-3903	FFIL303	<89944>	...SCREW,MACHINE.....		EA		2	*	*	*		*	114B	49
						---*---											
X1				716-39	<89944>	...BOLT,INTERNALLY RELIEVED..		EA		1						114B	50
X1				716-912	<89944>	...DIAPHRAGM ASSEMBLY,..... ADJUSTING		EA		1						114B	51
P	H		5315-527-0159	20632	<89944>	..PIN,TAPERED,PLAIN.....		EA		1	*	*	*		*	114B	52
P	H		6610-535-1313	716-945	<89944>	..SHAFT ASSEMBLY,ROCKING.....		EA		1	*	*	*		*	114B	
X1				716-55	<89944>	...SPRING COLLET.....		EA		1						114B	53
P	H		5305-207-3065	FFIL007	<89944>	...SCREW,MACHINE.....		EA		1	*	*	*		*	114B	54
X1				661KN62	<89944>	...COUNTERWEIGHT.....		EA		1						114B	55
X1				FF1L008	<89944>	...SCREW,MACHINE.....		EA		1						114B	56
X1				545-918	<89944>	...LEVER ASSEMBLY.....		EA		1						114B	57
P	H		5305-487-5600	371-78	<89944>	..SETSCREW.....		EA		1	*	*	*		*	114B	59
P	H		6610-019-5450	85071630040	<89944>	..RESTRAINING SPRING ASSEMBLY ATTACHING PARTS		EA		1	*	*	*		*	114B	
P	H		5305-443-2685	FFIL312	<89944>	..SCREW,MACHINE.....		EA		2	*	*	*		*	114B	60
P	H		5310-862-4871	WR3	<89944>	..WASHER.....		EA		2	*	*	*		*	114B	61
						---*---											
X1				FFIL209	<89944>	...SCREW,MACHINE.....		EA		2						114B	62
X1				661KN39	<89944>	...GASKET.....		EA		3						114B	63
X1				731-9	<89944>	...SPRING,RESTRAINING UPPER..		EA		1						114B	64
X1				731-10	<89944>	...SPRING,RESTRAINING LOWER..		EA		1						114B	65
X1				639-38	<89944>	...STEM,CALIBRATING.....		EA		1						114B	66
X1				545-40	<89944>	...SETSCREW.....		EA		17						114B	67
X1				52071630010	<89944>	...BRACKET.....		EA		1						114B	68
P	H		6610-019-5452	85071630060	<89944>	..PLATE AND BRIDGE ASSEMBLY.. ATTACHING PARTS		EA		1	*	*	*		*	114B	
X1				639-19	<89944>	..SCREW,MACHINE.....		EA		2						114B	69
X1				639-20	<89944>	..SCREW,POST.....		EA		1						114B	70
P	H		5310-190-2885	366B14	<89944>	..WASHER,NONMETALLIC.....		EA		3	*	*	*		*	114B	71
						---*---											
P	H		5315-527-0159	20632	<89944>	...PIN,TAPERED,PLAIN.....		EA		1	*	*	*		*	114B	72

(1) SOURCE, MAINT AND REC CODE (a) SOURCE CODE	(b) MAINT CODE	(c) REC CODE	(2) FEDERAL STOCK NUMBER	REFERENCE NUMBER	(3) DESCRIPTION	MODELS USABLE ON CH-34C	(4) UNIT OF ISSUE	(5) QTY INC IN UNIT PACK	(6) QTY INC IN UNIT	(7) 30 DAY DS GS MAINT ALW (a) 1-20	(b) 21-50	(c) 51-100	(8) 1 YR ALW PER 100 EQUIP CNTGCY	(9) DEPOT MAINT ALW PER 100 EQUIP	(10) ILLUSTRATION (a) FIG NO	(b) ITEM NO
P	H		6610-019-5447	85071630010	<89944> ...BRIDGE AND JEWEL ASSEMBLY, ATTACHING PARTS		EA		1	*	*	*		*	114B	
P	H		5305-095-8435	71-63	<89944> ...SCREW,MACHINE.....		EA		2	*	*	*		*	114B	73
					---*---											
P	H		6685-181-4214	371-96	<89944> ....JEWEL,SMALL.....		EA		2	*	*	REF		*	114B	74
X2	H			39071630010	<89944> ....PIN,STRAIGHT,HEADLESS....		EA		1						114B	75
X1				52071630030	<89944> ....BRIDGE.....		EA		1						114B	76
P	H		6610-303-0298	716-910B	<89944> ...SECTOR ASSEMBLY.....		EA		1	*	*	*		*	114B	
P	H		6610-144-4625	639-13	<89944> ...HAIRSPRING.....		EA		1	*	*	*		*	114B	77
P	H		6610-334-6862	639-912B	<89944> ...PINION AND MAGNET ASSEMBLY		EA		1	*	*	*		*	114B	79
P	H		5340-598-1840	74-13802-3008	<89944> ...RING,RETAINING.....		EA		1	*	*	*		*	114B	80
P	H		5310-862-2792	56071630010	<89944> ...WASHER,SPRING.....		EA		1	*	*	*		*	114B	81
P	H		6610-871-0634	85071630020	<89944> ...WHEEL ASSEMBLY.....		EA		1	*	*	*		*	114B	82
X1				366825B	<89944> ...WASHER,NONMETALLIC.....		EA		1						114B	83
P	H		6610-019-5451	85071630050	<89944> ...PLATE ASSEMBLY.....		EA		1	*	*	*		*	114B	
X1				57071630020	<89944> ....STUD.....		EA		1						114B	84
X1				33071630020	<89944> ....GEAR,SPUR.....		EA		1						114B	85
X1				56071630020	<89944> ....SPACER.....		EA		1						114B	86
X1				716-50	<89944> ....JEWEL,RING.....		EA		1						114B	87
X1				190-15	<89944> ....BEARING,JEWEL.....		EA		2						114B	88
X1				713-50	<89944> ....JEWEL,RING.....		EA		1						114B	89
P	H		6685-181-4214	371-96	<89944> ....JEWEL,SMALL.....		EA		1	*	*	REF		*	114B	90
X2	D			639-17	<89944> ....PIN,STRAIGHT,HEADLESS....		EA		2						114B	91
P	H		5330-599-1108	366B13	<89944> ..WASHER,NONMETALLIC.....		EA		3	*	*	*		*	114B	93
X1				X5112-26	<89944> ..SETSCREW.....		EA		1						114B	94
P	H		6610-723-8731	57071630010	<89944> ..BUSHING,ECCENTRIC.....		EA		1	*	*	*		*	114B	95
X1				85071630070	<89944> ..BODY AND PIN ASSEMBLY.....		EA		1						114B	96
		R	6610-224-1278	671K03	<89944> ALTIMETER,PRESSURE SEE..... FIG.114 FOR NHA		EA		1						114C	
		R	6610-232-9485	671BK011	<89944> ALTIMETER,PRESSURE SEE..... FIG.114 FOR NHA		EA		1						114C	
		R	6610-530-3955	671BK010	<89944> ALTIMETER,PRESSURE SEE..... FIG.114 FOR NHA		EA		1						114C	
		R	6610-566-9684	671BU010	<89944> ALTIMETER,PRESSURE SEE..... FIG.114 FOR NHA		EA		1						114C	
		R	6610-526-6085	671BK010D	<89944> ALTIMETER,PRESSURE SEE..... FIG.114 FOR NHA		EA		1						114C	
		R	6610-526-6068	671BU010D	<89944> ALTIMETER,PRESSURE SEE..... FIG.114 FOR NHA		EA		1						114C	
		R	6610-526-6088	671BK011D	<89944> ALTIMETER,PRESSURE SEE..... FIG.114 FOR NHA		EA		1						114C	
		R	6610-526-6087	671BK07D	<89944> ALTIMETER,PRESSURE SEE..... FIG.114 FOR NHA		EA		1						114C	
		R	6610-526-4791	671CK010D	<89944> ALTIMETER,PRESSURE SEE..... FIG.114 FOR NHA		EA		1						114C	
		R	6610-653-8458	671K03D	<89944> ALTIMETER,PRESSURE SEE.....		EA		1						114C	

(1) SOURCE, MAINT AND REC CODE (a) SOURCE CODE	(b) MAINT LEVEL	(c) REC CODE	(2) FEDERAL STOCK NUMBER	REFERENCE NUMBER	(3) DESCRIPTION	MODELS USABLE ON CH-34C	(4) UNIT OF ISSUE	(5) QTY INC IN UNIT PACK	(6) QTY NC IN UNIT	(7) 30-DAY DS GS MAINT ALW (a) 1-20	(b) 21-50	(c) 51-100	(8) 1-YR ALW PER 100 EQUIP CNTGCY	(9) DEPOT MAINT ALW PER 100 EQUIP	(10) ILLUSTRATION (a) FIG NO	(b) ITEM NO
					CONTINUED										114C	
					FIG.114 FOR NHA											
		R	6610-526-6079	709K01D <89944>	ALTIMETER,PRESSURE SEE.....		EA		1						114C	
					FIG.114 FOR NHA											
P	H		6610-993-5591	371K903C <89944>	.CASE ASSEMBLY.....NOTE 1		EA		1	*	*	*		*	114C	1
P	H		6685-144-4553	371K903D <89944>	.CASE ASSEMBLY SEE FIG.....		EA		1	*	*	*		*	114C	
					114C <SHEET 2 OF 2> FOR											
					BREAKDOWN NOTE 2 & 3											
P	H		6610-975-0545	671BK903B <89944>	.CASE ASSEMBLY.....NOTE 4		EA		1	*	*	*		*	114C	
P	H		5340-598-2203	371S25 <89944>	.RING,RETAINING.....		EA		1	*	*	*		*	114C	2
P	H		6685-334-6861	371-46 <89944>	.SPRING,RING.....		EA		1	*	*	*		*	114C	3
P	H		6610-034-3707	671-901 <89944>	.MECHANISM ASSEMBLY SEE.....		EA		1	*	*	*		*	114C	4
					FIG.114C <SHEET 2 OF 2>											
					FOR BREAKDOWN NOTE 1											
P	H		6610-034-3708	671B901 <89944>	.MECHANISM ASSEMBLY SEE.....		EA		1	*	*	*		*	114C	
					FIG.114C <SHEET 2 OF 2>											
					FOR BREAKDOWN NOTE 2,3 & 4											
P	H		6685-181-5354	371-53 <89944>	.PINION,CENTER.....		EA		1	*	*	*		*	114C	5
P	H		6685-166-7277	371S904 <89944>	.MECHANISM AND PLATE.....		EA		1	*	*	*		*	114C	6
					ASSEMBLY SEE FIG.114C											
					<SHEET 2 OF 2> FOR											
					BREAKDOWN											
P	H		5340-181-5814	371S7 <89944>	.RING,RETAINING.....		EA		1	*	*	*		*	114C	7
P	H		5315-181-6314	371S54 <89944>	.PIN,STRAIGHT,HEADLESS.....		EA		1	*	*	*		*	114C	8
P	H		6685-704-1524	371-913 <89944>	.GEAR CLUSTER,SPUR.....		EA		1	*	*	*		*	114C	9
P	H		6685-704-1523	371-914 <89944>	.GEAR CLUSTER,SPUR.....		EA		1	*	*	*		*	114C	10
P	H		6685-703-6819	371-903 <89944>	.GEAR ASSEMBLY.....		EA		1	*	*	*		*	114C	11
P	H		6685-181-4400	371-905 <89944>	.GEAR ASSEMBLY,INNER.....		EA		1	*	*	*		*	114C	12
					NOTE 1 & 3											
P	H		3020-533-3496	371-905-3 <89944>	.GEAR ASSEMBLY.....NOTE 2		EA		1	*	*	*		*	114C	
P	H		6610-760-3299	371-905-4 <89944>	.GEAR ASSEMBLY.....NOTE 4		EA		1	*	*	*		*	114C	
P	H		6610-443-8910	371K904C2 <89944>	.DIAL ASSEMBLY,BAROMETRIC....		EA		1	*	*	*		*	114C	13
					NOTE 2 & 4											
P	H		6685-181-5342	371-24 <89944>	.SHUTTER.....NOTE 1		EA		1	*	*	*		*	114C	14
P	H		6610-095-8261	371-127B <89944>	.SHIM.....NOTE 4		EA		1	*	*	*		*	114C	15
P	H		6685-329-0856	371-30B <89944>	.SPACE.....NOTE 4		EA		1	*	*	*		*	114C	
P	H		6610-034-3704	371-30 <89944>	.SPACER,PRESSURE.NOTE 1,2 & 4		EA		1	*	*	*		*	114C	
P	H		6610-505-3913	P2012 <98810>	.DIAL,SCALE.....		EA		1	*	*	*		*	114C	17
P	H		6685-180-9073	371-58 <89944>	.PIN,DIAL LOCATING.....		EA		2	*	*	*		*	114C	18
P	H		5305-297-2173	X30 <89944>	.SCREW,MACHINE.....		EA		2	*	*	*		*	114C	19
P	H		6610-975-0546	371K118B1234 <89944>	.RING,SETTING.....NOTE 1 & 3		EA		1	*	*	*		*	114C	20
P	H		6685-329-0858	371K118B15 <89944>	.RING,SETTING.....NOTE 2 & 4		EA		1	*	*	*		*	114C	
P	H		6610-979-8966	371K118B17T020 <89944>	.RING,SETTING.....NOTE 4		EA		1	*	*	*		*	114C	
P	H		6610-034-3706	642K950B <89944>	.RING ASSEMBLY,PRESSURE.....		EA		1	*	*	*		*	114C	21
					ALTIMETER NOTE 2 & 4											
P	H		6685-520-9675	P1122-1 <98810>	.POINTER AND DISK ASSEMBLY...		EA		1	*	*	*		*	114C	22
P	H		5355-668-6030	P1283 <98810>	.POINTER,DIAL.....		EA		1	*	*	*		*	114C	23
P	H		5355-668-6032	P1287 <98810>	.POINTER,DIAL.....		EA		1	*	*	*		*	114C	
P	H		6610-141-3577	371-618 <89944>	.GASKET.....		EA		1	*	*	REF		*	114C	25
			5355-538-6384	MS28105-17 <96906>	.WINDOW,DIAL.....		EA		1	*	*	*		*	114C	26
P	H		6610-532-2098	371-62 <89944>	.GASKET.....		EA		1	*	*	*		*	114C	27
P	H		5310-095-8266	371-21 <89944>	.WASHER.....		EA		1	*	*	*		*	114C	28

(1) SOURCE, MAINT AND REC CODE (a) SOURCE CODE	(b) MAINT LEVEL	(c) REC CODE	(2) FEDERAL STOCK NUMBER	REFERENCE NUMBER	(3) DESCRIPTION	MODELS USABLE ON CH-34C	(4) UNIT OF ISSUE	(5) QTY INC IN UNIT PACK	(6) QTY INC IN UNIT	(7) 30-DAY DS GS MAINT ALW (a) 1-20	(b) 21-50	(c) 51-100	(8) 1 YR ALW PER 100 EQUIP CNTGCY	(9) DEPOT MAINT ALW PER 100 EQUIP	(10) ILLUSTRATION (a) FIG NO	(b) ITEM NO
P	H		5340-235-1607	371-12	<89944> .SPRING,HELICAL,COMPRESSION..		EA		1	*	*	*		*	114C	29
P	H		5340-183-7997	371-21B	<89944> .SHIM.....		EA		1	*	*	*		*	114C	30
P	H		6610-936-8535	371K3B	<89944> .FLANGE ASSEMBLY.....NOTE 4		EA		7	*	*	*		*	114C	31
P	H		5310-816-6984	KL38BN	<89944> .WASHER,LOCK.....NOTE 1		EA		7	*	*	*		*	114C	32
P	H		5310-816-6981	KR38BN	<89944> .WASHER,LOCK.....NOTE 2,3,& 4		EA		7	*	*	*		*	114C	
P	H		5305-207-3657	FFIL314B	<89944> .SCREW,MACHINE...NOTE 1,2,& 3		EA		5	*	*	*		*	114C	33
P	H		5305-207-7940	371-12B	<89944> .SCREW,MACHINE.....NOTE 4		EA		2	*	*	*		*	114C	34
P	H		5305-637-7088	FFIL323B	<89944> .SCREW,MACHINE...NOTE 1,2,& 3		EA		2	*	*	*		*	114C	
P	H		5305-207-3069	FFIL310	<89944> .SCREW,MACHINE.....		EA		1	*	*	*		*	114C	35
P	H		5307-012-9169	371-44	<89944> .STUD,LOCKING.....		EA		1	*	*	*		*	114C	36
P	H		5305-531-1382	371-18	<89944> .SCREW,MACHINE.....		EA		1	*	*	*		*	114C	37
P	H		5310-275-1745	371-13B	<89944> .NUT,PLAIN,HEXAGON.....		EA		1	*	*	*		*	114C	38
P	H		5355-180-8443	371-14	<89944> .KNOB.....		EA		1	*	*	*		*	114C	39
			4730-240-5905	AN816-4D	<88044> .ADAPTER,STRAIGHT,PIPE TO.... TUBE		EA		2	*	*	*		*	114C	
P	H		5305-530-9584	RH624B	<89944> .SCREW,MACHINE...NOTE 1,2,& 3		EA		3	*	*	*		*	114C	
P	H		5310-816-6985	A6939-632-250	<78553> .NUT.....NOTE 4		EA		3	*	*	*		*	114C	
P	H		6610-993-5597	671-920	<89944> ..BODY ASSEMBLY.....NOTE 1		EA		1	*	*	*		*	114C	40
P	H		6685-547-4364	671B920	<89944> ..BODY ASSEMBLY..NOTE 2,3,& 4		EA		1	*	*	*		*	114C	
X1				671-921	<89944> ...BODY AND HAIRSPRING POST.. ASSEMBLY NOTE 1		EA		1						114C	41
X1				671B921	<89944> ...BODY AND HAIRSPRING POST.. ASSEMBLY NOTE 2,3,& 4		EA								114C	
P	H		6660-327-6454	371-95	<89944> ...BEARING,JEWEL.....		EA		1	*	*	*		*	114C	42
P	H		6685-181-4214	371-96	<89944> ...JEWEL,SMALL.....		EA		3	*	*	REF		*	114C	43
X1				FFIL206	<89944> ...SCREW,MACHINE.....		EA		1						114C	44
P	H		5305-487-5600	371-78	<89944> ...SETSCREW.....		EA		1	*	*	*		*	114C	45
P	H		5305-207-3084	FFIL610	<89944> ...SCREW,DIAPHRAGM CLAMPING..		EA		1	*	*	*		*	114C	46
P	H		5305-207-3065	FFIL007	<89944> ...SCREW,MACHINE.....		EA		1	*	*	*		*	114C	47
P	H		6685-167-3801	671-915	<89944> ..SHAFT ASSEMBLY.....		EA		1	*	*	*		*	114C	48
X1				371-88	<89944> ...SHAFT,ROCKING.....		EA		1						114C	49
P	H		6685-181-4214	371-96	<89944> ...JEWEL,SMALL.....		EA		3	*	*	REF		*	114C	
P	H		6610-315-8757	371-79	<89944> ...PIVOT.....		EA		1	*	*	*		*	114C	50
X1				371-64	<89944> ...SECTOR.....		EA		1						114C	51
X1				371-129B	<89944> ...COUNTERWEIGHT,SECTOR.....		EA		1						114C	52
P	H		5305-217-8147	671-87B	<89944> ...SCREW,MACHINE.....		EA		1	*	*	*		*	114C	53
P	H		6685-181-9925	671-73D2	<89944> ...HAIRSPRING,ROCKING.....		EA		1	*	*	*		*	114C	54
P	H		5305-217-8094	FFIL003	<89944> ...SCREW,MACHINE.....		EA		2	*	*	*		*	114C	55
P	H		6685-181-6074	371-73B	<89944> ..PINION,HANDSTAFF.....		EA		1	*	*	*		*	114C	56
P	H		6685-167-0939	371-922	<89944> ..SETTING ASSEMBLY,HANDSTAFF.		EA		1	*	*	*		*	114C	57
P	H		6685-703-7591	671-924	<89944> ...GEAR.....		EA		1	*	*	*		*	114C	59
X1				371-75	<89944> ....WHEEL.....		EA		1						114C	60
P	H		6610-028-2221	671-74B	<89944> ....PINION,INTERMEDIATE.....		EA		1	*	*	*		*	114C	61
P	H		5310-523-5607	176-71	<89944> ....WASHER,FLAT.....		EA		1	*	*	*		*	114C	62
P	H		6685-166-7228	371-76	<89944> ...DISK,ALTIMETER.....		EA		1	*	*	*		*	114C	63
P	H		6685-180-8551	371-77	<89944> ...HAIRSPRING,MECHANISM.....		EA		1	*	*	*		*	114C	64
P	H		6685-167-0940	371-923	<89944> ..SETTING ASSEMBLY,WHEEL..... JEWEL		EA		1	*	*	*		*	114C	65
P	H		6610-144-4759	371-921B	<89944> ..BRIDGE ASSEMBLY.....		EA		1	*	*	*		*	114C	66
X1				371-930	<89944> ...BRIDGE,HAIRSPRING POST.... ASSEMBLY		EA		1						114C	67
P	H		6685-181-4214	371-96	<89944> ...JEWEL,SMALL.....		EA		3	*	*	REF		*	114C	

(1) SOURCE, MAINT AND REC CODE (a) SOURCE CODE	(b) MAINT LEVEL	(c) REC CODE	(2) FEDERAL STOCK NUMBER	(3) DESCRIPTION REFERENCE NUMBER			MODELS USABLE ON CH-34C	(4) UNIT OF ISSUE	(5) QTY INC IN UNIT PACK	(6) QTY INC IN UNIT	(7) 30-DAY DS GS MAINT ALW (a) 1-20	(b) 21-50	(c) 51-100	(8) 1-YR ALW PER 100 EQUIP CNTGCY	(9) DEPOT MAINT ALW PER 100 EQUIP	(10) ILLUSTRATION (a) FIG NO	(b) ITEM NO
P	H		5305-537-1302	371-90B	<89944>	..SCREW,EXTERNALLY RELIEVED.. BODY		EA		3	*	*	*		*	114C	68
P	H		5315-514-2190	371-49-1	<89944>	..PIN,TAPERED,PLAIN.....		EA		1	*	*	*		*	114C	69
P	H		6610-176-3019	671-917	<89944>	..DIAPHRAGM ASSEMBLY...NOTE 1		EA		1	*	*	*		*	114C	70
P	H		6610-391-9847	671CP917	<89944>	..DIAPHRAGM ASSEMBLY..... NOTE 2,3 & 4		EA		1	*	*	*		*	114C	
P	H		6610-760-3298	671-929	<89944>	..ARM ASSEMBLY.....NOTE 1		EA		1	*	*	*		*	114C	71
P	H		6610-034-3709	671B929	<89944>	..ARM ASSEMBLY...NOTE 2,3 & 4		EA		1	*	*	*		*	114C	
X1				371-916	<89944>	...BALANCE ASSEMBLY..... NOTE 2 & 3		EA		1						114C	72
X1				671-916	<89944>	...BALANCE ASSEMBLY....NOTE 1		EA		1						114C	
X1				371-85	<89944>	...LINK,BALANCE.....NOTE 1		EA		1						114C	73
X1				671885	<89944>	...LINK,BALANCE..NOTE 2,3,& 4		EA		1						114C	
P	H		5841-675-6493	371-72	<89944>	...ARM,CALIBRATION.....		EA		2	*	*	*		*	114C	74
P	H		5315-514-1434	371-80	<89944>	...PIN,STRAIGHT,HEADED.....		EA		4	*	*	*		*	114C	75
P	H		5841-675-6493	371-72	<89944>	..ARM,CALIBRATION.....		EA		2	*	*	*		*	114C	
P	H		6685-181-6174	671-71	<89944>	..LINK,ALTIMETER.....NOTE 1		EA		1	*	*	*		*	114C	76
P	H		6685-181-6173	671B71	<89944>	..LINK,ALTIMETER.NOTE 2,3,& 4		EA		1	*	2	2		*	114C	
P	H		5315-514-1434	371-80	<89944>	..PIN,STRAIGHT,HEADED.....		EA		4	*	*	*		*	114C	
P	H		5315-038-0342	671-90B	<89944>	..PIN,TAPERED,PLAIN..... NOTE 2,3,& 4		EA		1	*	*	*		*	114C	77
X2	H			371S905	<89944>	..PLATE ASSEMBLY,TOP.....		EA		1						114C	78
P	H		6685-181-5415	371-910	<89944>	..WHEEL ASSEMBLY.....		EA		1	*	*	*		*	114C	79
P	H		6685-181-5684	371-907	<89944>	..PLATE ASSEMBLY,TOP BEARING.		EA		1	*	*	*		*	114C	80
P	H		6685-181-5685	371-906	<89944>	...PLATE AND BUSHING ASSEMBLY		EA		1	*	*	*		*	114C	81
P	H		6685-181-4265	371-52	<89944>	...HANDSTAFF,SHORT HAND.....		EA		1	*	*	*		*	114C	82
P	H		6685-181-5414	371-908	<89944>	...WHEEL ASSEMBLY,ALTIMETER..		EA		1	*	*	*		*	114C	83
P	H		6685-181-5368	371-909	<89944>	...WHEEL AND HUB ASSEMBLY....		EA		1	*	*	*		*	114C	84
P	H		6610-371-0704	371-41	<89944>	...GEAR,ALTIMETER.....		EA		1	*	*	*		*	114C	85
P	H		5305-033-6174	371-60B	<89944>	..SCREW,SHOULDER.....NOTE 4		EA		3	*	*	*		*	114C	86
P	H		5305-487-5596	371-60	<89944>	..SCREW,SHOULDER.NOTE 1,2,& 3		EA		3	*	*	*		*	114C	
P	H		6685-181-5369	371-911	<89944>	..HUB AND WHEEL ASSEMBLY.....		EA		1	*	*	*		*	114C	87
P	H		6610-487-5590	371-15	<89944>	..GEAR,IDLER.....		EA		1	*	*	*		*	114C	89
P	H		5310-487-5605	371K121	<89944>	..WASHER,SPRING TENSION.....		EA		1	*	*	*		*	114C	90
P	H		6685-180-8915	371-16	<89944>	..SHAFT,IDLER.....		EA		1	*	*	*		*	114C	91
P	H		6685-181-6075	371-8	<89944>	..PINION,KNOB STEM ADJUSTING.		EA		1	*	*	*		*	114C	92
P	H		5330-887-4662	371-45B	<89944>	..WASHER,LEATHER.....NOTE 4		EA		1	*	*	*		*	114C	93
P	H		5330-487-5593	371-45	<89944>	..WASHER,LEATHER.NOTE 1,2,& 3		EA		1	*	*	*		*	114C	
P	H		6685-180-8574	371-9	<89944>	..STEM,ADJUSTING KNOB.....		EA		1	*	*	*		*	114C	94
P	H		5315-537-1301	371-10	<89944>	..PIN,STRAIGHT,HEADLESS.....		EA		1	*	*	*		*	114C	95
P	H		5340-282-4971	371-11	<89944>	..RING,RETAINING.....		EA		1	*	*	*		*	114C	96
						NOTE 1											
						U/O 6610-224-1278											
						NOTE 2											
						U/O 6610-232-9485											
						NOTE 3											
						U/O 6610-530-3955											
						NOTE 4											
						U/O 6610-566-9684											

(1) SOURCE, MAINT AND REC CODE (a) SOURCE	(b) MAINT	(c) REC	(2) FEDERAL STOCK NUMBER	REFERENCE NUMBER	(3) DESCRIPTION	MODELS USABLE ON CH-34C	(4) UNIT OF ISSUE	(5) QTY INC IN UNIT PACK	(6) QTY INC IN UNIT	(7) 30-DAY DS GS MAINT ALW (a) 1-20	(b) 21-50	(c) 51-100	(8) 1-YR ALW PER 100 EQUIP CNTGCY	(9) DEPOT MAINT ALW PER 100 EQUIP	(10) ILLUSTRATION (a) FIG NO	(b) ITEM NO
		R	6610-190-1425	716U03	<89944> INDICATOR,VERTICAL VELOCITY.. SEE FIG.113 & 114 FOR NHA		EA		1						114D	
		R	6610-663-4153	716BK8-036	<89944> INDICATOR,VERTICAL VELOCITY.. SEE FIG.113 & 114 FOR NHA		EA		1						114D	
		R	6610-663-4156	716BU8-036	<89944> INDICATOR,VERTICAL VELOCITY.. SEE FIG.113 & 114 FOR NHA		EA		1						114D	
		R	6610-526-7967	716BU4-052	<89944> INDICATOR,VERTICAL VELOCITY.. SEE FIG.113 & 114 FOR NHA		EA		1						114D	
		R	6610-938-1759	716CU4-052	<89944> INDICATOR,VERTICAL VELOCITY.. SEE FIG.113 & 114 FOR NHA		EA		1						114D	
P	O	R	6610-558-0480	716BU8-050	<89944> INDICATOR,VERTICAL VELOCITY.. SEE FIG.113 & 114 FOR NHA		EA		1	REF	REF	REF	REF	*	114D	
		R	6610-526-7965	716CU4-053	<89944> INDICATOR,VERTICAL VELOCITY.. SEE FIG.113 & 114 FOR NHA		EA		1						114D	
		R	6610-190-1399	716BK5-046	<89944> INDICATOR,VERTICAL VELOCITY.. SEE FIG.113 & 114 FOR NHA		EA		1						114D	
P	H		6695-654-9770	716BU3	<89944> .BEZEL,INSTRUMENT MOUNTING... NOTE 3,4,5,6 & 7		EA		1	*	*	*		*	114D	1
P	H		6610-053-1734	716K46B	<89944> .FLANGE,MOUNTING.....NOTE 1		EA		1	*	*	*		*	114D	
P	H		6610-019-5411	716BK902	<89944> .FLANGE ASSEMBLY...NOTE 2 & 8 ATTACHING PARTS		EA		1	*	*	*		*	114D	
P	H		5305-955-9542	FFIL3151-2SS8PX	<89944> .SCREW.....NOTE 2,3,4,5,6 & 8		EA		1	*	*	*		*	114D	2
P	H		5305-955-9542	61401060331	<89944> .SCREW,MACHINE.....NOTE 7		EA		1	*	*	*		*	114D	
P	H		5305-572-9402	FFIL3161-2SS8PX	<89944> .SCREW.....NOTE 2,3,4,5,6 & 8		EA		7	*	*	*		*	114D	3
P	H		5305-215-8290	FFIL315SS8PX	<89944> .SCREW,MACHINE.....NOTE 1		EA		7	*	*	*		*	114D	
P	H		5305-761-4113	61401060333	<89944> .SCREW,MACHINE.....NOTE 7		EA		7	*	*	*		*	114D	
P	H		5310-637-2476	KL3SS4PX	<89944> .WASHER,LOCK.....NOTE 6		EA		7	*	*	*		*	114D	4
P	H		5310-276-1226	61701020003	<89944> .WASHER,LOCK.....NOTE 7		EA		7	*	*	*		*	114D	
P	H		5310-019-5478	KL3SS8PX	<89944> .WASHER,LOCK..... NOTE 1,2,3,4,5 & 8 ---*---		EA		7	*	*	*		*	114D	
P	H		5330-530-3516	590BK48	<89944> .GASKET.....		EA		AR	*	*	*		*	114D	5
P	H		6610-530-3068	590BK48-2	<89944> .GASKET.....NOTE 7		EA		AR	*	*	*		*	114D	
P	H		6610-561-5662	590BK48-3	<89944> .GASKET.....NOTE 7		EA		AR	*	*	*		*	114D	
			5355-538-6382	MS28105-16	<96906> .WINDOW,DIAL..... NOTE 2,3,4,5,6,7 & 8		VX		1	*	*	*		*	114D	6
			5355-538-6387	MS28105-15	<96906> .WINDOW,DIAL.....NOTE 1		EA		1	*	*	*		*	114D	
P	H		5340-487-5671	645K6-2	<89944> .GASKET,SEALING.....		EA		1	*	*	*		*	114D	7
X2	H		6610-019-5407	716-9018	<89944> .MECHANISM ASSEMBLY SEE..... FIG.114D <SHEET 2 OF 2> FOR BREAKDOWN NOTE 1,2,3,4,6 & 8		EA		1	*	*	*		*	114D	8
X2	H			716C901	<89944> .MECHANISM ASSEMBLY SEE..... FIG.114D <SHEET 2 OF 2> FOR BREAKDOWN NOTE 5 & 7 ATTACHING PARTS		EA		1						114D	
P	H		5305-978-2176	FFIL413CSS8PX	<89944> .SCREW,MACHINE.....		EA		5	*	*	*		*	114D	9
P	H		5305-955-9529	61401060426	<89944> .SCREW,MACHINE.....NOTE 7 ---*---		EA		5	*	*	*		*	114D	
P	H		5330-530-3522	716-18B	<89944> .WASHER,NONMETALLIC.....		EA		1	*	*	*		*	114D	10
P	H		6610-525-5820	716BK17B	<89944> .PINION,INDICATOR.....NOTE 6		EA		1	*	*	*		*	114D	11
P	H		6610-019-5475	716C5	<89944> .PINION,INDICATOR.....		EA		1	*	*	*		*	114D	

(1) SOURCE, MAINT AND REC CODE (a) SOURCE CODE	(b) MAINT LEVEL	(c) REC CODE	(2) FEDERAL STOCK NUMBER	REFERENCE NUMBER	(3) DESCRIPTION	MODELS USABLE ON CH-34C	(4) UNIT OF ISSUE	(5) QTY INC IN UNIT PACK	(6) QTY INC IN UNIT	(7) 30-DAY DS GS MAINT ALW (a) 1-20	(b) 21-50	(c) 51-100	(8) 1-YR ALW PER 100 EQUIP CNTGCY	(9) DEPOT MAINT ALW PER 100 EQUIP	(10) ILLUSTRATION (a) FIG NO	(b) ITEM NO
					CONTINUED										114D	
					NOTE 1,2,3,4,5,7 & 8											
P	H		5310-487-5692	716-30 <89944>	.WASHER.....		EA		1	*	*	*		*	114D	12
P	H		6610-371-0857	716-19 <89944>	.SPRING,HELICAL,COMPRESSION..		EA		1	*	*	*		*	114D	13
P	H		6610-371-0861	716-47 <89944>	.SEAT,HELICAL,COMPRESSION....		EA		1	*	*	*		*	114D	14
P	H		5330-141-3445	716-7 <89944>	.WASHER,NONMETALLIC.....		EA		1	*	*	*		*	114D	15
P	H		6610-319-4015	716-6B <89944>	.FILLER,THERMOS.....		EA		1	*	*	*		*	114D	16
P	H		6610-319-4011	716-11 <89944>	.CUSHION,BOTTLE.....		EA		1	*	*	*		*	114D	17
P	H		6610-525-5819	716-903 <89944>	.PLATE ASSEMBLY,SPRING.....		EA		1	*	*	*		*	114D	18
P	H		6610-723-8691	716-8 <89944>	.PLATE,SPRING UPPER....NOTE 7		EA		1	*	*	*		*	114D	
					ATTACHING PARTS											
P	H		5305-487-5690	716-13 <89944>	.SCREW,MACHINE.....NOTE 7		EA		3	*	*	*		*	114D	
					---*---											
P	H		6610-321-3414	716-12 <89944>	.SPRING,INDICATOR.....NOTE 7		EA		9	*	*	*		*	114D	
P	H		6610-925-8645	716-9 <89944>	.PLATE,SPRING.....NOTE 7		EA		1	*	*	*		*	114D	
P	H		5330-433-8437	716-10B <89944>	.PACKING,PREFORMED.....		EA		1	*	*	*		*	114D	19
P	H		6610-371-0937	865F133 <89944>	.SCREEN,AIR.....		EA		1	*	*	*		*	114D	22
					NOTE 1,2,3,4,6 & 8											
P	H		6615-558-8068	671C133 <89944>	.FILTER,PARTICULATE.....		EA		1	*	*	*		*	114D	
					NOTE 5 & 7											
P	H		5310-025-8009	671C134 <89944>	.WASHER,FLAT.....NOTE 7		EA		1	*	*	*		*	114D	
			5305-253-5606	MS21318-7 <96906>	.SCREW,DRIVE.....NOTE 6		HD		2	*	*	*		*	114D	
X2	H			716BU1 <89944>	.CASE.....NOTE 3,4 & 6		EA		1						114D	23
X2	H			716CU1 <89944>	.CASE.....NOTE 5		EA		1						114D	
X2	H			716K1D <89944>	.CASE.....NOTE 1,2 & 8		EA		1						114D	
P	H		6610-661-1797	545-919B6 <89944>	..HAND ASSEMBLY.....		EA		1	*	*	*		*	114D	24
					NOTE 2,3,4,5,6 & 7											
P	H		6610-522-2311	545-919B7 <89944>	...HAND ASSEMBLY.....NOTE 1 & 8		EA		1	*	*	*		*	114D	
P	H		6610-536-4892	716BK036-1 <89944>	...DIAL,INNER.....NOTE 2 & 3		EA		1	*	*	*		*	114D	25
X2	H			716BU036-1-1 <89944>	....DIAL,INNER.....NOTE 6		EA		1						114D	
P	H		6610-054-8825	716U03-1 <89944>	...DIAL,INDICATOR.....NOTE 1		EA		1	*	*	*		*	114D	
P	H		6610-054-8824	716BK046-1-1 <89944>	....DIAL,INDICATOR.....NOTE 8		EA		1	*	*	*		*	114D	
X1				716CU051-1-1 <89944>	....DIAL,INNER.....NOTE 7		EA		1						114D	
P	H		6610-019-5474	716BK052-1-1 <89944>	....DIAL,INNER.....NOTE 4		EA		1	*	*	*		*	114D	
P	H		6610-019-5503	716CU051-1 <89944>	....DIAL,SCALE.....NOTE 5		EA		1	*	*	*		*	114D	
					ATTACHING PARTS											
P	H		5305-443-2748	X31 <89944>	....SCREW,MACHINE.....		EA		2	*	*	*		*	114D	26
					---*---											
X2	H			716BU036-1-2 <89944>	....DIAL,OUTER.....NOTE 2,3 & 6		EA		2						114D	27
P	H		6610-050-6337	716BK046-1-2 <89944>	....DIAL,INDICATOR.....NOTE 8		EA		1	*	*	*		*	114D	
X1				716CU051-1-2 <89944>	....DIAL,OUTER.....NOTE 7		EA		1						114D	
P	H		6610-907-3124	716BK052-1-2 <89944>	....DIAL,OUTER.....NOTE 4		EA		1	*	*	*		*	114D	
P	H		6610-907-3123	716CU051-2 <89944>	....DIAL,OUTER.....NOTE 5		EA		1	*	*	*		*	114D	
					ATTACHING PARTS											
P	H		5305-443-2748	X31 <89944>	....SCREW,MACHINE.....		EA		2	*	*	*		*	114D	28
					---*---											
P	H		6610-546-4613	716B907 <89944>	..BRIDGE ASSEMBLY,FRONT.....		EA		1	*	*	*		*	114D	
					ATTACHING PARTS											
P	H		5305-219-7948	639-21-2 <89944>	..SCREW,SHOULDER.....		EA		2	*	*	*		*	114D	29
					---*---											
P	H		6660-327-6454	371-95 <89944>	....BEARING,JEWEL.....		EA		1	*	*	*		*	114D	30
X1				716B16 <89944>	....BRIDGE,FRONT.....		EA		1						114D	31

(1) SOURCE, MAINT AND REC CODE (a) SOURCE CODE	(b) MAINT LEVEL	(c) REC CODE	(2) FEDERAL STOCK NUMBER	REFERENCE NUMBER	(3) DESCRIPTION	MODELS USABLE ON CH-34C	(4) UNIT OF ISSUE	(5) QTY INC IN UNIT PACK	(6) QTY INC IN UNIT	(7) 30-DAY DS/GS MAINT ALW (a) 1-20	(b) 21-50	(c) 51-100	(8) 1-YR ALW PER 100 EQUIP CNTGCY	(9) DEPOT MAINT ALW PER 100 EQUIP	(10) ILLUSTRATION (a) FIG NO	(b) ITEM NO
P	H		6610-181-4271	296-909B	<89944> ..HANDSTAFF AND MAGNET..... ASSEMBLY		EA		1	*	*	*		*	114D	32
P	H		6610-659-0737	716-918	<89944> ..ORIFICE ASSEMBLY.....		EA		1	*	*	*		*	114D	33
P	H		6610-334-6870	716B919B1	<89944> ..CAPILLARY ASSEMBLY.....		EA		1	*	*	*		*	114D	34
P	H		6610-723-8725	716B919B2	<89944> ..CAPILLARY ASSEMBLY.....		EA		1	*	*	*		*	114D	
P	H		6610-925-8644	716B919B3	<89944> ..CAPILLARY ASSEMBLY.....		EA		1	*	*	*		*	114D	
P	H		5330-599-1432	545-62	<89944> ..WASHER...NOTE 1,2,3,4,6 & 8		EA		2	*	*	*		*	114D	35
P	H		5330-948-0962	46071630040	<89944> ..WASHER,FLAT.....NOTE 7		EA		2	*	*	*		*	114D	
P	H		5330-684-3418	PB19099	<89944> ..WASHER,NONMETALLIC..... NOTE 5 & 6		EA		2	*	*	*		*	114D	
P	H		6610-053-1731	716-4	<89944> ..FLANGE ASSEMBLY.....NOTE 1		EA		1	*	*	*		*	114D	36
P	H		6610-609-6937	71684	<89944> ..FLANGE,INDICATOR..... NOTE 2,3,4,6 & 8		EA		1	*	*	*		*	114D	
P	H		6610-589-0029	716C4	<89944> ..FLANGE,MECHANISM MOUNTING.. NOTE 5 & 7		EA		1	*	*	*		*	114D	
					ATTACHING PARTS											
P	H		5305-207-3676	FFIL409B	<89944> ..SCREW,MACHINE.....		EA		3	*	*	*		*	114D	37
				61401120418	<89944> ..SCREW,MACHINE.....NOTE 7		EA		3						114D	
P	H		5310-209-6474	716-31	<89944> ..WASHER,FLAT.....		EA		3	*	*	*		*	114D	38
					---*---											
P	H		6610-561-2968	716-20	<89944> ..SPACER...NOTE 1,2,3,4,6 & 8		EA		1	3	7	14		*	114D	
P	H		6610-586-6311	716C7	<89944> ..SPACER.....NOTE 5 & 7		EA		1	*	*	*		*	114D	
P	H		5305-371-0798	614K61	<89944> ..SCREW.....		EA		1	*	*	*		*	114D	40
P	H		5310-190-2885	366814	<89944> ..WASHER,NONMETALLIC.....		EA		1	*	*	*		*	114D	41
P	H		5330-443-2979	366B105	<89944> ..WASHER,NONMETALLIC.....		EA		1	*	*	*		*	114D	42
P	H		5330-599-1469	366B19	<89944> ..WASHER,NONMETALLIC.....		EA		1	*	*	*		*	114D	43
P	H		6610-349-6414	716-915	<89944> ..DIAPHRAGM AND VALVE..... ASSEMBLY		EA		1	*	*	*		*	114D	44
P	H		5330-260-8178	716-44	<89944> ..WASHER,NONMETALLIC.....		EA		1	*	*	*		*	114D	45
P	H		6610-019-5473	716-14	<89944> ..BRACKET.....		EA		1	*	*	*		*	114D	46
					ATTACHING PARTS											
P	H		5305-207-5402	FFIL407	<89944> ..SCREW,MACHINE.....		EA		2	*	*	*		*	114D	47
					---*---											
P	H		5305-545-9035	716-49	<89944> ..SETSCREW.....		EA		1	*	*	*		*	114D	48
X2	H			714-41	<89944> ..ECCENTRIC,BRACKET....NOTE 6		EA		1						114D	49
P	H		5315-514-1434	371-80	<89944> ..PIN,STRAIGHT,HEADED.....		EA		1	*	*	*		*	114D	50
P	H		6610-545-5575	716-914	<89944> ..ADJUSTMENT ASSEMBLY,..... DIAPHRAGM		EA		1	*	*	*		*	114D	
					ATTACHING PARTS											
P	H		5305-550-3180	FFIL415	<89944> ..SCREW,MACHINE.....		EA		1	*	*	*		*	114D	51
				61401050430	<89944> ..SCREW,MACHINE.....NOTE 7		EA		2						114D	
P	H		6610-586-6310	716-42	<89944> ..SPACER,PLATE.....		EA		1	*	*	*		*	114D	52
					---*---											
X1				716-40B	<89944> ...SETSCREW.....		EA		1						114D	53
X1				716-920	<89944> ...PLATE ASSEMBLY,DIAPHRAGM..		EA		1						114D	54
X1				716-35	<89944> ...SPRING,DIAPHRAGM..... ADJUSTMENT		EA		1						114D	55
					ATTACHING PARTS											
P	H		5305-207-3903	FFIL303	<89944> ...SCREW,MACHINE.....		EA		2	*	*	*		*	114D	56
					---*---											
X1				716-39	<89944> ...BOLT,INTERNALLY RELIEVED.. BODY		EA		1						114D	57

(1) SOURCE, MAINT AND REC CODE (a) SOURCE CODE	(b) MAINT LEVEL	(c) REC CODE	(2) FEDERAL STOCK NUMBER	REFERENCE NUMBER	(3) DESCRIPTION	MODELS USABLE ON CH-34C	(4) UNIT OF ISSUE	(5) QTY INC IN UNIT PACK	(6) QTY INC IN UNIT	(7) 30-DAY DS GS MAINT ALW (a) 1-20	(b) 21-50	(c) 51-100	(8) 1 YR ALW PER 100 EQUIP CNTGCY	(9) DEPOT MAINT ALW PER 100 EQUIP	(10) ILLUSTRATION (a) FIG NO	(b) ITEM NO
X1				716-912	<89944> ...DIAPHRAGM ASSEMBLY,..... ADJUSTING		EA		1						114D	58
P	H		5315-527-0159	20632	<89944> ..PIN,TAPERED,PLAIN.....		EA		1	*	*	*		*	114D	59
P	H		5315-514-2190	371-49-1	<89944> ..PIN,TAPERED,PLAIN....NOTE 7		EA		1	*	*	*		*	114D	
P	H		6610-535-1313	716-945	<89944> ..SHAFT ASSEMBLY,ROCKING.....		EA		1	*	*	*		*	114D	
P	H		5975-214-1534	545-66	<89944> ...BUSHING,ROCKING SHAFT.....		EA		2	*	*	*		*	114D	
X1				716-55	<89944> ...SPRING AND COLLET..... ASSEMBLY		EA		1						114D	60
X2	H			61430050006	<89944> ...SETSCREW.....NOTE 6		EA		1						114D	61
P	H		5305-685-6881	61430060006	<89944> ...SETSCREW.....NOTE 7		EA		2	*	*	*		*	114D	
X1				661KN62	<89944> ...COUNTERWEIGHT.....		EA		1						114D	62
X2	H			61430050006	<89944> ...SETSCREW.....NOTE 6		EA		1						114D	63
X1				545-918	<89944> ...LEVER ASSEMBLY.....		EA		1						114D	64
P	H		5305-955-9530	61401100618	<89944> ..SCREW,MACHINE.....NOTE 7		EA		2	*	*	*		*	114D	
P	H		6610-723-8698	716-921	<89944> ..SPRING ASSEMBLY,RESTRAINING ATTACHING PARTS		EA		1	*	*	*		*	114D	
P	H		5305-443-2685	FFIL312	<89944> ..SCREW,MACHINE.....		EA		2	*	*	*		*	114D	66
P	H		5310-685-1498	61715100003	<89944> ..WASHER,FLAT.....NOTE 7		EA		2	*	*	*		*	114D	
P	H		5310-862-4871	WR3	<89944> ..WASHER,FLAT.....NOTE 6		EA		2	*	*	*		*	114D	67
					---*---											
X1				FFIL209	<89944> ...SCREW,MACHINE.....		EA		2						114D	68
X1				661KN39	<89944> ...GASKET.....		EA		3						114D	69
X1				731-9	<89944> ...SPRING,RESTRAINING,UPPER..		EA		1						114D	70
X1				731-10	<89944> ...SPRING,RESTRAINING,LOWER..		EA		1						114D	71
X1				639-38	<89944> ...STEM,CALIBRATING.....		EA		1						114D	72
X1				545-40	<89944> ...SETSCREW.....		EA		16						114D	73
P	H		5305-559-0711	61401050218	<89944> ...SCREW,MACHINE.....NOTE 7		EA		2	*	*	*		*	114D	
X1				545-38	<89944> ...BRACKET,RESTRAINING..... SPRING		EA		1						114D	74
P	H		6610-019-5404	716-904	<89944> ..PLATE AND BRIDGE ASSEMBLY.. NOTE 1,2,3,4,6 & 8		EA		1	*	*	*		*	114D	
P	H		6610-019-5476	716C903	<89944> ..PLATE AND BRIDGE ASSEMBLY.. NOTE 5 & 7		EA		1	*	*	*		*	114D	
					ATTACHING PARTS											
P	H		6610-349-6310	614K89	<89944> ..BASE,DIAPHRAGM.....		EA		1	*	*	*		*	114D	75
P	H		5330-599-1469	366B19	<89944> ..WASHER,NONMETALLIC.....		EA		1	*	*	*		*	114D	76
P	H		5305-207-3647	FFIL609	<89944> ..SCREW,MACHINE.....		EA		2	*	*	*		*	114D	77
P	H		5310-190-2885	366B14	<89944> ..WASHER,NONMETALLIC.....		EA		2	*	*	*		*	114D	78
P	H		5330-599-1108	366B13	<89944> ..WASHER,NONMETALLIC.....		EA		3	*	*	*		*	114D	79
					---*---											
P	H		5315-527-0159	20632	<89944> ...PIN,TAPERED,PLAIN.....		EA		1	*	*	*		*	114D	80
P	H		6610-523-5621	639-923	<89944> ...BRIDGE AND JEWEL ASSEMBLY. ATTACHING PARTS		EA		1	*	*	*		*	114D	
P	H		5305-095-8435	71-63	<89944> ...SCREW,MACHINE.....		EA		2	*	*	*		*	114D	81
					---*---											
X1				366B56	<89944> ....JEWEL.....		EA		2						114D	82
X1				639-6	<89944> ....BRIDGE.....		EA		1						114D	83
P	H		6610-303-0298	716-910B	<89944> ...SECTOR ASSEMBLY..... NOTE 5,6 & 7		EA		1	*	*	*		*	114D	
P	H		6610-371-0866	716-910	<89944> ...SECTOR ASSEMBLY..... NOTE 1,2,3,4 & 8		EA		1	*	*	*		*	114D	
P	H		6610-144-4625	639-13	<89944> ....HAIRSPRING,SECTOR.....		EA		1	*	*	*		*	114D	84

(1) SOURCE, MAINT AND REC CODE (a) SOURCE CODE	(b) MAINT CATEGORY	(c) REC CODE	(2) FEDERAL STOCK NUMBER	REFERENCE NUMBER	(3) DESCRIPTION	MODELS USABLE ON CH-34C	(4) UNIT OF ISSUE	(5) QTY INC IN UNIT PACK	(6) QTY INC IN UNIT	(7) 30-DAY DS GS MAINT ALW (a) 1-20	(b) 21-50	(c) 51-100	(8) 1-YR ALW PER 100 EQUIP CNTGCY	(9) DEPOT MAINT ALW PER 100 EQUIP	(10) ILLUSTRATION (a) FIG NO	(b) ITEM NO
P	H		6610-334-6862	639-912B	<89944> ...PINION AND MAGNET ASSEMBLY NOTE 1,2,3,4,5,6 & 8		EA		1	*	*	*		*	114D	86
P	H		6610-950-7081	639-912	<89944> ...PINION AND MAGNET ASSEMBLY NOTE 7		EA		1	*	*	*		*	114D	
P	H		6610-609-6936	716-906C	<89944> ...BODY ASSEMBLY.....NOTE 6		EA		1	*	*	*		*	114D	
P	H		6610-019-5405	716-905	<89944> ...PLATE ASSEMBLY,MECHANISM.. NOTE 1,2,3,4 & 8		EA		1	*	*	*		*	114D	
P	H		6610-019-5477	716C904	<89944> ...PLATE ASSEMBLY,MECHANISM.. NOTE 5 & 7		EA		1	*	*	*		*	114D	
X1				716-911	<89944> ....SCREW ASSEMBLY,ADJUSTMENT		EA		1						114D	87
X1				639-913	<89944> ....PIN AND SUPPORT ASSEMBLY.		EA		1						114D	88
X1				639-27B	<89944> ....WASHER,SPRING TENSION....		EA		1						114D	89
X1				639-39	<89944> ....WASHER,NONMETALLIC.....		EA		1						114D	90
X1				614K92	<89944> ....RING,RETAINING.....		EA		1						114D	91
X1				614K90	<89944> ....WASHER,RECESSED.....		EA		1						114D	92
X1				614K28	<89944> ....SPRING,HELICAL..... COMPRESSION		EA		1						114D	93
X1				614K91	<89944> ....WASHER,FLAT.....		EA		1						114D	94
X1				716-908	<89944> ....WHEEL ASSEMBLY..... NOTE 1,2,3,4,6 & 8		EA		1						114D	95
X1				716C905	<89944> ....WHEEL ASSEMBLY.NOTE 5 & 7		EA		1						114D	
X1				366B25B	<89944> ....WASHER,NONMETALLIC.....		EA		1						114D	96
X1				366S12	<89944> ....POST,PLATE..... ATTACHING PARTS		EA		3						114D	97
X1				639-19	<89944> ....SCREW,MACHINE.....		EA		2						114D	98
X1				639-20	<89944> ....SCREW,POST.....		EA		1						114D	99
P	H		5310-190-2885	366B14	<89944> ....WASHER,NONMETALLIC..... ---*---		EA		3	*	*	*		*	114D	100
P	H		5330-599-1108	366B13	<89944> ....WASHER,NONMETALLIC.....		EA		3	*	*	*		*	114D	101
X1				716-50	<89944> ....JEWEL,RING.....		EA		2						114D	102
X1				190-15	<89944> ....BEARING,JEWEL.....		EA		2						114D	103
P	H		6685-181-4214	371-96	<89944> ....JEWEL,SMALL.....		EA		1	*	*	REF		*	114D	104
X1				64-28	<89944> ....DISK,SOLID,PLAIN.....		EA		1						114D	105
X1				366B58	<89944> ....DISK,SOLID,PLAIN.....		EA		1						114D	106
X1				716-906C	<89944> ..BODY ASSEMBLY.....		EA		1						114D	
X1				FFIL212	<89944> ...SCREW,MACHINE.....		EA		1						114D	107
P	H		6610-059-6356	545-916	<89944> ...STOP ASSEMBLY,DIAPHRAGM..		EA		1	*	*	*		*	114D	108
P	H		6610-315-8757	371-79	<89944> ...PIVOT.....		EA		1	*	*	*		*	114D	109
P	H		5305-487-5600	371-78	<89944> ...SETSCREW.....		EA		1	*	*	*		*	114D	110
					NOTE 1											
					U/O 6610-190-1425											
					NOTE 2											
					U/O 6610-663-4153											
					NOTE 3											
					U/O 6610-663-4156											
					NOTE 4											
					U/O 6610-526-7967											
					NOTE 5											
					U/O 6610-938-1759											
					NOTE 6											
					U/O 6610-558-0480											
					NOTE 7											

(1) SOURCE, MAINT AND REC CODE (a) SOURCE CODE	(b) MAINT LEVEL	(c) REC CODE	(2) FEDERAL STOCK NUMBER	(3) DESCRIPTION REFERENCE NUMBER			MODELS USABLE ON CH-34C	(4) UNIT OF ISSUE	(5) QTY INC IN UNIT PACK	(6) QTY INC IN UNIT	(7) 30-DAY DS GS MAINT ALW (a) 1-20	(b) 21-50	(c) 51-100	(8) 1-YR ALW PER 100 EQUIP CNTGCY	(9) DEPOT MAINT ALW PER 100 EQUIP	(10) ILLUSTRATION (a) FIG NO	(b) ITEM NO
						CONTINUED U/O 6610-526-7965 NOTE 8 U/O 6610-190-1399										114D	
		R	6610-388-0068	RCA2	<80510>	INDICATOR,TURN AND SLIP..... SEE FIG.113 FOR NHA		EA		1						114E	
		R	6610-663-4115	RCA2W	<80510>	INDICATOR,TURN AND SLIP..... SEE FIG.113 FOR NHA		EA		1						114E	
		R	6610-398-0059	RCA1	<80510>	INDICATOR,TURN AND SLIP..... SEE FIG.113 FOR NHA		EA		1						114E	
P	H		6610-981-5078	TSC61-701XX	<06275>	.COVER ASSEMBLY.....NOTE 1		EA		1	*	*	*		*	114E	
P	H		5310-373-9412	C61-501	<06275>	.NUT,PLAIN,HEXAGON.....		EA		1	*	*	*		*	114E	1
						---*---											
P	H		6610-683-9370	C61701	<80510>	..HOUSING,INDICATOR.....		EA		1	*	*	*		*	114E	2
P	H		6610-981-5079	TSC61906	<80510>	..PLATE,IDENTIFICATION.NOTE 1		EA		1	*	*	*		*	114E	3
			5320-060-5385	MS20450C885	<96906>	..RIVET,TUBULAR.....		VC		4	*	*	*		*	114E	4
P	H		6695-860-9543	C61-903XX	<06275>	.BEZEL ASSEMBLY..... ATTACHING PARTS		EA		1	*	*	*		*	114E	
			5305-639-0914	AN50084-4	<88044>	.SCREW,MACHINE.....		EA		8	*	*	*		*	114E	5
P	H		5310-990-4232	A1324	<06275>	.WASHER,LOCK.....		EA		8	*	*	*		*	114E	6
						---*---											
P	H		6610-333-8121	C61905	<80510>	..PACKING,PREFORMED.....		EA		1	*	2	2		*	114E	7
			5355-538-6382	MS28105-16	<96906>	..WINDOW,DIAL.....		VX		1	*	*	*		*	114E	8
P	H		6695-683-9715	C61903	<06275>	..BEZEL.....		EA		1	*	*	*		*	114E	9
P	H		6610-981-6918	TSC63-901XX	<06275>	.MECHANISM ASSEMBLY....NOTE 1		EA		1	*	*	*		*	114E	
			5330-194-3720	AN6230B10	<88044>	..PACKING,PREFORMED.....		EA		1	2	2	4	48	*	114E	10
P	H		5330-641-3819	C65902	<80510>	..GASKET.....		EA		1	*	*	*		*	114E	11
P	H		5915-388-9193	C65-901XX	<06275>	..FILTER ASSEMBLY..... ATTACHING PARTS		EA		1	*	*	*		*	114E	12
			5305-839-4514	MS35273-27	<96906>	..SCREW,MACHINE.....		EA		2	*	*	*		*	114E	13
			5310-551-7770	MS35337-40	<96906>	..WASHER,LOCK.....		EA		2	*	*	*		*	114E	14
P	H		5310-638-9783	75M193	<07835>	..WASHER,FLAT.....		EA		2	*	*	*		*	114E	15
						---*---											
P	H		5970-306-4634	C63909	<06275>	..INSULATOR,WASHER.....		EA		1	*	*	*		*	114E	16
X1				TSC64101XX	<06275>	..INDICATING ASSEMBLY..NOTE 1		EA		1						114E	
			5305-407-8551	MS35214-2	<96906>	..SCREW,MACHINE.....		HD		2	*	*	*		*	114E	17
P	H		6610-629-0088	C64301X	<80510>	...POINTER AND PIVOT ASSEMBLY NOTE 1 NOTE 3		EA		1	*	*	*		*	114E	
			5305-059-8226	MS35214-1	<96906>	....SCREW,MACHINE.....		HD		1	*	*	*		*	114E	18
P	H		6610-619-0132	C64104-1	<80510>	....SHIM.....		EA		1	*	*	*		*	114E	19
P	H		5310-595-6070	C64104-2	<80510>	....WASHER,FLAT.....		EA		1	*	*	*		*	114E	
P	H		6680-531-6592	C64104-3	<80510>	....SHIM..... ATTACHING PARTS		EA		1	*	*	*		*	114E	
			5340-619-7229	MS16633-1006	<96906>	....RING,RETAINING..... ---*---		EA		1	*	*	*		*	114E	20

(1) SOURCE, MAINT AND REC CODE (a) SOURCE	(b) MAINT	(c) REC	(2) FEDERAL STOCK NUMBER	REFERENCE NUMBER		(3) DESCRIPTION	MODELS USABLE ON CH-34C	(4) UNIT OF ISSUE	(5) QTY INC IN UNIT PACK	(6) QTY INC IN UNIT	(7) 30-DAY DS GS MAINT ALW (a) 1-20	(b) 21-50	(c) 51-100	(8) 1-YR DEPOT MAINT ALW PER 100 EQUIP CONTGCY	(9) PER 100 EQUIP	(10) ILLUSTRATION (a) FIG NO	(b) ITEM NO
X1				TSC64101X	<06275>	...DIAL ASSEMBLY.....NOTE 1		EA		1						114E	
X1				C64901X	<80510>	...INCLINOMETER ASSEMBLY.... NOTE 1 NOTE 3		EA		1						114E	
X1				TSWC64901X	<80510>	....INCLINOMETER ASSEMBLY.... NOTE 2		EA		1						114E	
						ATTACHING PARTS											
P	H		6685-515-2851	C64801	<80510>	....SPRING,HELICAL,TENSION...		EA		2	*	*	*		*	114E	21
						---*---											
X1				C64-102	<06275>	.....RETAINER,INCLINOMETER...		EA		1						114E	22
P	H		6610-337-5477	C64902	<80510>	.....CARD REFLECTOR,DIAL..... NOTE 1 NOTE 3		EA		1	2	3	6		*	114E	23
X1				TSWC64902	<80510>	.....REFLECTOR CARD,DIAL..... ASSEMBLY NOTE 2		EA		1						114E	
P	H		6610-388-9188	C64901	<80510>	.....INCLINOMETER.....NOTE 1 NOTE 3		EA		1	2	2	3		*	114E	24
P	H		6610-337-5476	C64702	<06275>	.....WIRE,DIAL ASSEMBLY..... NOTE 1 NOTE 3		EA		2	2	4	7		*	114E	25
P	H		6610-767-4602	TSC64101-1	<80510>	....DIAL,TURN AND SLIP..... INDICATOR NOTE 1		EA		1	*	2	2		*	114E	26
				TSWC64101	<80510>	....DIAL.....NOTE 2		EA		1						114E	
P	H		6610-337-5472	C63802	<80510>	..SPRING,HELICAL,EXTENSION...		EA		1	*	*	*		*	114E	27
P	H		6610-629-0087	C63402X	<80510>	..ANCHORAGE ASSEMBLY,..... RESTRAINING		EA		2	*	*	*		*	114E	
						ATTACHING PARTS											
			5305-206-0514	AN515-5-5	<88044>	..SCREW,MACHINE.....		HD		2	*	*	*		*	114E	28
			5310-551-7770	MS35337-40	<96906>	..WASHER,LOCK.....		EA		2	*	*	*		*	114E	29
P	H		5310-033-5329	C63105	<80510>	..WASHER,FLAT.....		EA		2	*	*	*		*	114E	30
						---*---											
P	H		6610-335-6083	C63402	<80510>	...RESTRAINING SPRING.....		EA		2	*	*	*		*	114E	31
P	H		6610-981-5081	77R2XR1228W	<06275>	...BEARING,DAMPER.....		EA		2	*	*	*		*	114E	32
P	H		5310-033-5329	C63105	<80510>	..WASHER,FLAT.....		EA		2	*	*	*		*	114E	33
P	H		5305-025-8017	C63506	<80510>	..SETSCREW.....		EA		1	*	*	*		*	114E	34
			5310-579-5554	MS35333-35	<96906>	..WASHER,LOCK.....		HD		1	*	*	*		*	114E	35
P	H		5310-569-2930	C63109	<80510>	..WASHER,SPRING TENSION.....		EA		1	*	*	*		*	114E	36
P	H		6610-049-3989	C63106X	<80510>	..DAMPING UNIT.....		EA		1	*	2	2		*	114E	37
						ATTACHING PARTS											
			5305-828-7659	MS35273-12	<96906>	..SCREW,MACHINE.....		EA		4	*	*	*		*	114E	38
			5310-551-7770	MS35337-40	<96906>	..WASHER,LOCK.....		EA		4	*	*	*		*	114E	39
						---*---											
P	H		6610-337-5468	C63110	<80510>	..COVER,FRONT GROUND.....		EA		1	*	*	*		*	114E	40
P	H		6610-910-3254	C63904X	<80510>	..PLATE ASSEMBLY,REAR.....		EA		1	*	*	*		*	114E	
						ATTACHING PARTS											
			5305-145-7676	AN50084-5	<88044>	..SCREW,MACHINE.....		GR		4	*	*	*		*	114E	41
			5310-551-7770	MS35337-40	<96906>	..WASHER,LOCK.....		EA		4	*	*	*		*	114E	42
						---*---											
P	H		5310-208-3430	C63508	<80510>	...NUT,PLAIN,ROUND.....		EA		1	*	*	*		*	114E	43
P	H		6610-049-3994	C63502X	<80510>	...PIVOT ASSEMBLY.....		EA		1	*	*	*		*	114E	44
P	H		6610-938-4977	C63904	<80510>	...PLATE,REAR.....		EA		1	*	*	*		*	114E	45
P	H		3110-771-0195	[illegible]	<24617>	..BEARING,BALL,ANNULAR.....		EA		2	*	2	2		*	114E	46

(1) SOURCE, MAINT AND REC CODE (a) SOURCE CODE	(b) MAINT LEVEL	(c) REC CODE	(2) FEDERAL STOCK NUMBER	REFERENCE NUMBER		(3) DESCRIPTION	MODELS USABLE ON CH-34C	(4) UNIT OF ISSUE	(5) QTY INC IN UNIT PACK	(6) QTY INC IN UNIT	(7) 30-DAY DS GS MAINT ALW (a) 1-20	(b) 21-50	(c) 51-100	(8) 1-YR ALW PER 100 EQUIP CNTGCY	(9) DEPOT MAINT ALW PER 100 EQUIP	(10) ILLUSTRATION (a) FIG NO	(b) ITEM NO
P	H		6610-920-4669	C62900X	<80510>	..MOTOR ASSEMBLY,GYRO.....		EA		1	*	*	*		*	114E	
P	H		6610-388-9189	C62102X	<80510>	...CONTACT,GROUND.....		EA		1	*	*	*		*	114E	47
P	H		6615-662-9496	C62907	<80510>	...BUSHING,SLEEVE.....		EA		2	*	*	*		*	114E	48
						ATTACHING PARTS											
			5305-145-6921	AN50181-10	<88044>	...SCREW,MACHINE.....		EA		2	*	*	*		*	114E	49
P	H		5310-050-2254	502254	<80510>	...WASHER,FLAT.....		LB		2	*	*	*		*	114E	50
			5310-579-1521	AN935-1L	<88044>	...WASHER,LOCK.....		EA		2	*	*	*		*	114E	51
						---*---											
P	H		6615-518-6894	C62105	<80510>	...CLAMP,ELECTRICAL.....		EA		1	*	*	*		*	114E	52
P	H		6615-049-3976	C62104X	<80510>	...LEAD ASSEMBLY,ELECTRICAL..		EA		1	*	*	*		*	114E	53
X2	H		6610-097-5147	C62-905X	<80510>	...END ASSEMBLY,GIMBAL.....		EA		1	*	*	*		*	114E	
						ATTACHING PARTS											
			5305-145-7676	AN50084-5	<88044>	...SCREW,MACHINE.....		GR		4	*	*	*		*	114E	54
			5310-551-7770	MS35337-40	<96906>	...WASHER,LOCK.....		EA		4	*	*	*		*	114E	55
						---*---											
			5305-717-6950	MS51963-9	<96906>	....SETSCREW.....		EA		1	*	*	*		*	114E	56
P	H		6610-536-4974	C62103	<80510>	....PLUG,INDICATOR.....		EA		1	*	*	2		*	114E	57
P	H		5310-330-8308	C62501	<80510>	....NUT,MOTOR ADJUSTING.....		EA		1	*	*	*		*	114E	58
X2	H		6615-337-5463	C62905	<80510>	....END,GIMBAL.....		EA		1	*	*	*		*	114E	59
			5330-227-9483	AN622789	<88044>	...PACKING,PREFORMED.....		EA		2	*	*	*		*	114E	60
X2	H			A1428	<06275>	...ROTOR,MOTOR.....		EA		1						114E	
P	H		3110-852-0398	77R4LR1224E	<43334>	....BEARING,BALL,ANNULAR.....		EA		2	*	*	*		*	114E	61
P	H		6615-322-5562	C62402X	<80510>	....SPACER AND SLINGER.....		EA		1	*	*	*		*	114E	62
						ASSEMBLY											
P	H		6105-557-3218	C62912X	<80510>	....ROTOR,MOTOR.....		EA		1	*	*	*		*	114E	63
X1				C62-911X	<06275>	.....ARMATURE,MOTOR ASSEMBLY.		EA		1						114E	
P	H		6615-398-0057	C62116X	<80510>	.....GOVERNOR ASSEMBLY,.....		EA		1	*	*	*		*	114E	
P	H		6615-727-6971	C62109X	<80510>	...STATOR,MOTOR.....		EA		1	*	*	*		*	114E	
P	H		5999-049-3986	C62702	<80510>	....MAGNET,PERMANENT MOTOR...		EA		1	*	*	*		*	114E	64
P	H		6615-678-1936	C62701	<80510>	....END BELL,ELECTRICAL.....		EA		1	*	*	*		*	114E	65
P	H		6615-313-2009	C62-109	<80510>	....INSULATION,WASHER.....		EA		1	*	*	*		*	114E	66
P	H		6615-337-5461	C62802X	<80510>	....SUPPORT ASSEMBLY,.....		EA		1	*	*	*		*	114E	
P	H		5940-600-1226	C62111X	<80510>	....SUPPORT ASSEMBLY		PG		1	*	*	*		*	114E	
						ATTACHING PARTS											
			5305-812-3549	MS35214-5	<96906>	....SCREW,MACHINE.....		HD		4	*	*	*		*	114E	67
						---*---											
X1				C62-114	<06275>	.....LUG,SOLDER.....		EA		1						114E	68
X1				C62-110X	<06275>	.....SUPPORT SUBASSEMBLY,....		EA		1						114E	70
						NEGATIVE MOTOR BRUSH											
X1				C62-301X	<06275>	.....SUPPORT ASSEMBLY,.....		EA		1						114E	71
						POSITIVE MOTOR BRUSH											
X1				C62-112X	<06275>	.....ARM ASSEMBLY,MOTOR.....		EA		1						114E	72
						BRUSH,NEGATIVE											
P	H		6615-049-3987	C62908	<80510>	.....ARM ASSEMBLY.....		EA		1	*	*	*		*	114E	73
						ATTACHING PARTS											
			5305-144-4066	AN520B1-2	<88044>	.....SCREW,MACHINE.....		EA		2	*	*	*		*	114E	74
			5310-579-1521	AN935-1L	<88044>	.....WASHER,LOCK.....		EA		2	*	*	*		*	114E	75
P	H		5305-207-3958	C62502	<80510>	....SCREW,MACHINE.....		EA		1	*	*	*		*	114E	77
P	H		5330-613-5463	C62101	<80510>	....SUPPORT,TRIMMER SCREW....		EA		1	*	*	*		*	114E	78
						ATTACHING PARTS											
			5305-145-6917	AN500B2-3	<88044>	....SCREW,MACHINE.....		HD		2	*	*	*		*	114E	79

(1) SOURCE, MAINT AND REC CODE (a) SOURCE CODE	(b) MAINT CODE	(c) REC CODE	(2) FEDERAL STOCK NUMBER	REFERENCE NUMBER	(3) DESCRIPTION	MODELS USABLE ON CH-34C	(4) UNIT OF ISSUE	(5) QTY INC IN UNIT PACK	(6) QTY INC IN UNIT	(7) 30-DAY DS/GS MAINT ALW (a) 1-20	(b) 21-50	(c) 51-100	(8) 1-YR ALW PER 100 EQUIP CNTGCY	(9) DEPOT MAINT ALW PER 100 EQUIP	(10) ILLUSTRATION (a) FIG NO	(b) ITEM NO
			5310-515-8000	MS35337-39 <96906>	....WASHER,LOCK.....		HD		2	*	*	*		*	114E	80
					---*---											
P	H		5310-333-5681	C62504 <80510>	....NUT,PLAIN,HEXAGON.....		EA		2	*	*	*		*	114E	81
P	H		5310-333-8123	C62505 <80510>	....NUT,PLAIN,HEXAGON.....		EA		2	*	*	*		*	114E	
			5310-720-8392	MS20341-4A <96906>	....NUT,PLAIN,HEXAGON.....		HD		2	*	*	*		*	114E	82
			5310-551-7770	MS35337-40 <96906>	....WASHER,LOCK.....		EA		2	*	*	*		*	114E	83
P	H		5307-206-8810	C62503 <80510>	....STUD,PLAIN.....		EA		2	*	*	*		*	114E	84
P	H		6610-583-9666	C62903X <80510>	....LEAD,ELECTRICAL.....		EA		1	*	*	*		*	114E	
X1				C62-102X <06275>	.....CONTACT GROUND ASSEMBLY.		EA		1						114E	85
P	H		5970-329-0405	C62403 <80510>	....INSULATOR,BUSHING.....		EA		1	*	*	*		*	114E	86
					ATTACHING PARTS											
			5305-579-3701	AN501B1-6 <88044>	....SCREW,MACHINE.....		EA		1	*	*	*		*	114E	87
			5310-579-1521	AN935-1L <88044>	....WASHER,LOCK.....		EA		1	*	*	*		*	114E	88
					---*---											
P	H		6615-337-5462	C62901 <80510>	....GIMBAL,BANK AND TURN.....		EA		1	*	*	*		*	114E	89
			5305-717-6950	MS51963-9 <96906>	...SETSCREW.....		EA		1	*	*	*		*	114E	90
P	H		6610-536-4974	C62103 <80510>	...PLUG,INDICATOR.....		EA		1	*	*	REF		*	114E	91
P	H		5310-330-8308	C62501 <80510>	...NUT,MOTOR ADJUSTING.....		EA		1	*	*	*		*	114E	92
P	H		6610-981-5084	C63-901X <06275>	..FRAME ASSEMBLY.....		EA		1	*	*	*		*	114E	
P	H		6610-527-1233	C63801 <80510>	...SPRING,HELICAL,EXTENSION..		EA		1	*	*	*		*	114E	93
P	H		6610-398-0058	C63102 <80510>	...CLAMP,POINTER ARM,.....		EA		1	*	*	*		*	114E	94
					INDICATING											
P	H		6610-868-7569	C63101X <80510>	...ANCHORAGE ASSEMBLY.....		EA		1	*	*	*		*	114E	
					ATTACHING PARTS											
			5305-145-6917	AN500B2-3 <88044>	...SCREW,MACHINE.....		HD		2	*	*	*		*	114E	95
			5310-515-8000	MS35337-39 <96906>	...WASHER,LOCK.....		HD		2	*	*	*		*	114E	96
					---*---											
P	H		5305-025-8016	C63501 <80510>	....SETSCREW.....		EA		1	*	*	*		*	114E	97
P	H		6610-337-5464	C63101 <80510>	....ANCHORAGE ZEROING SCREW..		EA		1	*	*	*		*	114E	98
P	H		5970-306-4634	C63909 <06275>	...INSULATOR,WASHER.....		EA		1	*	*	*		*	114E	99
P	H		5310-639-2583	C63504 <80510>	...NUT,PLAIN,ROUND.....		EA		1	*	*	*		*	114E	100
P	H		6610-049-3988	C63103X <80510>	...ARM,POINTER,ZEROING.....		EA		1	*	*	*		*	114E	
P	H		5305-025-8016	C63501 <80510>	...SETSCREW.....		EA		1	*	*	*		*	114E	101
P	H		5310-049-3993	C63401 <80510>	....NUT,SLEEVE.....		EA		1	*	*	*		*	114E	102
P	H		6610-981-6916	C63104 <80510>	....ARM,SENSITIVITY.....		EA		1	*	*	*		*	114E	103
					ATTACHING PARTS											
			5305-052-5946	MS35198-4 <96906>	....SCREW,MACHINE.....				1	*	*	*		*	114E	104
					---*---											
P	H		6610-049-3988	C63103X <80510>	....ARM,POINTER,ZEROING.....		EA		1	*	*	*		*	114E	105
P	H		6610-629-0086	A1637 <80510>	...PIVOT ASSEMBLY.....		EA		1	*	*	*		*	114E	106
P	H		5340-388-9191	C63903 <80510>	...BUSHING,RUBBER.....		EA		2	*	*	*		*	114E	107
P	H		5315-308-2506	C63507 <80510>	...PIN,STRAIGHT,THREADED.....		EA		2	*	*	*		*	114E	108
X2	H		6610-981-5083	C63901 <06275>	...FRAME.....		EA		1	*	*	*		*	114E	109
			5305-059-8226	MS35214-1 <96906>	...SCREW,MACHINE.....		HD		1	*	*	*		*	114E	112
			5310-515-8000	MS35337-39 <96906>	...WASHER,LOCK.....		HD		2	*	*	*		*	114E	113
P	H		5340-664-3687	C63112 <80510>	...STRAP,RETAINING.....		EA		1	*	*	*		*	114E	114
					NOTE 1											
					U/O 6610-388-0068											
					NOTE 2											
					U/O 6610-663-4115											
					NOTE 3											
					U/O PN RCA1											

(1) SOURCE, MAINT AND REC CODE (a) SOURCE CODE	(b) MAINT LEVEL	(c) REC CODE	(2) FEDERAL STOCK NUMBER	REFERENCE NUMBER	(3) DESCRIPTION	MODELS USABLE ON CH-34C	(4) UNIT OF ISSUE	(5) QTY INC IN UNIT PACK	(6) QTY INC IN UNIT	(7) 30-DAY DS GS MAINT ALW (a) 1-20	(b) 21-50	(c) 51-100	(8) 1-YR ALW PER 100 EQUIP CNTGCY	(9) DEPOT MAINT ALW PER 100 EQUIP	(10) ILLUSTRATION (a) FIG NO	(b) ITEM NO
P	O	R	6610-585-1145	A1600	<80510> INDICATOR,TURN AND SLIP..... SEE FIG.113 & 114 FOR NHA		EA		1						114F	
P	H		6610-584-5853	A1590	<80510> .PLATE,IDENTIFICATION.....		EA		1	*	*	*		*	114F	1
P	H		6610-629-0084	A1571	<80510> .FILTER ASSEMBLY..... ATTACHING PARTS		EA		1	*	*	*		*	114F	2
P	H		6610-629-0083	A1555	<80510> .TEAR BAND,COVER..... ---*---		EA		1	*	*	*		*	114F	3
P	H		6610-308-2502	A1120	<80510> ..FILLING TUBE,INDICATOR.....		EA		1	*	*	*		*	114F	4
P	H		1610-326-0627	A1562	<76275> .DOWEL.....		EA		1	*	*	*		*	114F	
P	H		5355-012-2237	A1541	<80510> ..WINDOW,DIAL.....		EA		1	*	*	*		*	114F	5
P	H		6610-629-0079	A1538	<80510> ..SPACER,RING.....		EA		1	*	*	*		*	114F	6
X2	H		6610-629-0081	A1545	<80510> ..COVER,INDICATOR.....		EA		1	*	*	*		*	114F	7
P	H		6695-585-3700	A1480	<80510> ..BEZEL.....		EA		1	*	*	*		*	114F	8
P	H		6610-629-0080	A1540	<80510> ..SPACER,RING.....		EA		1	*	*	*		*	114F	9
P	F		1610-326-0628	A1598	<76275> .LOCK.....		EA		1	2	4	7		*	114F	
P	H		6610-308-6554	A1134	<80510> ..PACKING,PREFORMED.....		EA		2	*	*	*		*	114F	10
X1				TSC64-101XX	<06275> ..INDICATING ASSEMBLY..... ATTACHING PARTS		EA		1						114F	11
			5305-407-8551	MS35214-2	<96906> ..SCREW,MACHINE..... ---*---		HD		2	*	*	*		*	114F	12
P	H		6610-629-0088	C64301X	<80510> ...POINTER AND PIVOT ASSEMBLY ATTACHING PARTS		EA		1	*	*	*		*	114F	
			5305-059-8226	MS35214-1	<96906> ...SCREW,MACHINE..... ---*---		HD		1	*	*	*		*	114F	13
X1				C64301	<80510> ....PIVOT,POINTER..... ATTACHING PARTS		EA		1						114F	14
			5340-619-7229	MS16633-1006	<96906> ....RING,RETAINING..... ---*---		EA		1	*	*	*		*	114F	15
P	H		6610-619-0132	C64104-1	<80510> ....SHIM.....		EA		AR	*	*	*		*	114F	16
P	H		5310-595-6070	C64104-2	<80510> ....WASHER,FLAT.....		EA		AR	*	*	*		*	114F	
P	H		6680-531-6592	C64104-3	<80510> ....SHIM.....		EA		AR	*	*	*		*	114F	
X1				C64103X	<80510> ....POINTER ASSEMBLY.....		EA		1						114F	17
P	H		6610-859-6136	TSC64101X	<80510> ...DIAL ASSEMBLY.....		EA		1	*	*	*		*	114F	
				TSWC64101	<80510> ....DIAL..... ATTACHING PARTS		EA		1						114F	18
P	H		6685-515-2851	C64801	<80510> ....SPRING,HELICAL TENSION... ---*---		EA		2	*	*	*		*	114F	19
X1				TSWC64901X	<80510> ....INCLINOMETER ASSEMBLY....		EA		1						114F	20
X1				C64102	<80510> .....RETAINER,INCLINOMETER...		EA		1						114F	21
P	H		6610-867-1157	TSWC64902	<80510> .....REFLECTOR CARD,DIAL..... ASSEMBLY		EA		1	*	*	*		*	114F	23
P	H		6610-337-5472	C63802	<80510> ..SPRING,HELICAL,EXTENSION...		EA		1	*	*	*		*	114F	25
P	H		6610-629-0087	C63402X	<80510> ..ANCHOR ASSEMBLY..... ATTACHING PARTS		EA		2	*	*	*		*	114F	26
			5305-206-0514	AN515-5-5	<88044> ..SCREW,MACHINE.....		HD		2	*	*	*		*	114F	27
P	H		5310-033-5329	C63105	<80510> ..WASHER,FLAT.....		EA		2	*	*	*		*	114F	28

(1) SOURCE, MAINT AND REC CODE (a) SOURCE CODE	(b) MAINT LEVEL	(c) REC CODE	(2) FEDERAL STOCK NUMBER	REFERENCE NUMBER		(3) DESCRIPTION	MODELS USABLE ON CH-34C	(4) UNIT OF ISSUE	(5) QTY INC IN UNIT PACK	(6) QTY INC IN UNIT	(7) 30-DAY DS/GS MAINT ALW (a) 1-20	(b) 21-50	(c) 51-100	(8) 1-YR ALW PER 100 EQUIP CNTGCY	(9) DEPOT MAINT ALW PER 100 EQUIP	(10) ILLUSTRATION (a) FIG NO	(b) ITEM NO
						CONTINUED										114F	28
						---*---											
			5310-045-4007	MS35338-41	<96906>	..WASHER,LOCK.....		HD		2	*	*	*			114F	29
P	H		5305-025-8017	C63506	<80510>	..SETSCREW.....		EA		1	*	*	*		*	114F	30
			5310-579-5554	MS35333-35	<96906>	..WASHER,LOCK.....		HD		1	*	*	*		*	114F	31
P	H		5310-569-2930	C63109	<80510>	..WASHER,SPRING TENSION.....		EA		1	*	*	*		*	114F	32
P	H		6610-629-0085	A1581	<80510>	..DAMPING UNIT.....		EA		1	*	*	*		*	114F	33
						ATTACHING PARTS											
			5305-145-7678	AN500B4-3	<88044>	..SCREW,MACHINE.....		EA		4	*	*	*		*	114F	34
			5310-551-7770	MS35337-40	<96906>	..WASHER,LOCK.....		EA		4	*	*	*		*	114F	35
						---*---											
P	H		6610-527-1233	C63801	<80510>	..SPRING,HELICAL,EXTENSION...		EA		1	*	*	*		*	114F	36
P	H		6610-398-0058	C63102	<80510>	..CLAMP,POINTER ARM.....		EA		1	*	*	*		*	114F	37
						ATTACHING PARTS											
			5305-145-6917	AN50082-3	<88044>	..SCREW,MACHINE.....		HD		2	*	*	*		*	114F	38
						---*---											
P	H		6610-868-7569	C63101X	<80510>	..ANCHORAGE ASSEMBLY.....		EA		1	*	*	*		*	114F	39
P	H		6610-776-4612	A1564	<80510>	..TERMINAL BOARD ASSEMBLY....		EA		1	*	*	*		*	114F	40
						ATTACHING PARTS											
			5305-290-3209	MS35245-9	<96906>	..SCREW,MACHINE.....		EA		2	*	*	*		*	114F	41
						---*---											
P	H		5970-935-4925	A1561	<80510>	..INSULATION,TERMINAL BOARD..		EA		1	*	*	*		*	114F	42
P	H		5970-306-4634	C63909	<80510>	..INSULATOR,WASHER.....		EA		1	*	*	*			114F	43
P	H		5310-639-2583	C63504	<80510>	..NUT,PLAIN,ROUND.....		EA		1	*	*	*		*	114F	44
P	H		6610-049-3988	C63103X	<80510>	..ARM ASSEMBLY.....		EA		1	*	*	*		*	114F	45
P	H		5340-388-9191	C63903	<80510>	..BUSHING,RUBBER.....		EA		2	*	*	*		*	114F	46
P	H		5315-308-2506	C63507	<80510>	..PIN,STRAIGHT,THREADED.....		EA		2	*	*	*		*	114F	47
P	H		5340-616-9545	A1547	<80510>	..CLIP,SPRING TENSION.....		EA		2	*	*	*		*	114F	48
						ATTACHING PARTS											
			5305-579-4685	AN515UB6R4	<88044>	..SCREW,MACHINE.....		EA		2	*	*	*		*	114F	49
P	H		5310-616-2289	A1583	<80510>	..WASHER,FLAT.....		EA		2	*	*	*		*	114F	50
						---*---											
P	H		5340-664-3687	C63112	<80510>	..STRAP,RETAINING.....		EA		1	*	*	*		*	114F	51
						ATTACHING PARTS											
			5305-059-8226	MS35214-1	<96906>	..SCREW,MACHINE.....		HD		1	*	*	*		*	114F	52
			5310-515-8000	MS35337-39	<96906>	..WASHER,LOCK.....		HD		1	*	*	*		*	114F	53
						---*---											
P	H		5970-306-4634	C63909	<80510>	..INSULATOR,WASHER.....		EA		1	*	*	*		*	114F	54
P	H		5310-208-3438	C63508	<80510>	..NUT,PLAIN,ROUND.....		EA		1	*	*	*		*	114F	55
P	H		6610-629-0086	A1637	<80510>	..PIVOT ASSEMBLY,GIMBAL.....		EA		2	*	*	*		*	114F	56
						CONTACT											
P	H		6610-629-0078	A1479	<80510>	..CAP,FRAME.....		EA		1	*	*	*		*	114F	57
						ATTACHING PARTS											
			5305-985-0775	AN505DD4-9	<88044>	..SCREW,MACHINE.....		EA		4	*	*	*		*	114F	58
						---*---											
X2	H			A1575	<80510>	..FRAME ASSEMBLY.....		EA		1						114F	
P	H		6610-941-0509	A1478	<80510>	...FRAME,MACHINED.....		EA		1	*	*	*		*	114F	59
P	H		5315-905-8741	A1574	<80510>	...PIN,STRAIGHT,HEADLESS.....		EA		2	*	*	*		*	114F	60
P	H		3110-701-0102	RS77SR4DZD7540W	<24617>	..BEARING,BALL,ANNULAR.....		EA		2	*	REF	REF		*	114F	61
P	H		6615-629-0082	A1548	<80510>	.ARM ASSEMBLY,FORK ACTUATING.		EA		1	*	*	*		*	114F	63
						ATTACHING PARTS											
			5305-145-6917	AN50082-3	<88044>	.SCREW,MACHINE.....		HD		2	*	*	*		*	114F	64

(1) SOURCE, MAINT AND REC CODE (a) SOURCE CODE	(b) MAINT LEVEL	(c) REC CODE	(2) FEDERAL STOCK NUMBER	REFERENCE NUMBER		(3) DESCRIPTION	MODELS USABLE ON CH-34C	(4) UNIT OF ISSUE	(5) QTY INC IN UNIT PACK	(6) QTY INC IN UNIT	(7) 30-DAY DS GS MAINT ALW (a) 1-20	(b) 21-50	(c) 51-100	(8) 1-YR ALW PER 100 EQUIP CNTGCY	(9) DEPOT MAINT ALW PER 100 EQUIP	(10) ILLUSTRATION (a) FIG NO	(b) ITEM NO
			5310-515-8000	MS35337-39	<96906>	.WASHER.....		HD		2	*	*	*		*	114F	65
						---*---											
P	H		6615-518-6894	C62105	<80510>	.CLAMP,ELECTRICAL.....		EA		1	*	*	*		*	114F	66
						ATTACHING PARTS											
			5305-145-7676	AN500B4-5	<88044>	.SCREW,MACHINE.....		GR		2	*	*	*		*	114F	67
			5310-551-7770	MS35337-40	<96906>	.WASHER,LOCK.....		EA		2	*	*	*		*	114F	68
						---*---											
P	H		6615-049-3976	C62104X	<80510>	.LEAD ASSEMBLY,ELECTRICAL....		EA		1	*	*	*		*	114F	69
X2	H		6615-337-5463	C62905	<80510>	.END GIMBAL.....		EA		1	*	*	*		*	114F	
						ATTACHING PARTS											
			5305-145-7676	AN500B4-5	<88044>	.SCREW,MACHINE.....		GR		2	*	*	*		*	114F	70
			5310-551-7770	MS35337-40	<96906>	.WASHER,LOCK.....		EA		2	*	*	*		*	114F	71
						---*---											
			5305-717-6950	MS51963-9	<96906>	..SETSCREW.....		EA		1	*	*	*		*	114F	72
P	H		6610-536-4974	C62103	<80510>	..PLUG,INDICATOR.....		EA		1	*	*	REF		*	114F	73
P	H		5310-330-8308	C62501	<80510>	..NUT,MOTOR ADJUSTING.....		EA		1	*	*	*		*	114F	74
X2	H		6615-337-5463	C62905	<80510>	..END,GIMBAL.....		EA		1	*	*	*		*	114F	75
			5330-227-9483	AN6227B9	<88044>	.PACKING,PREFORMED.....		EA		1	*	*	*		*	114F	76
P	H		6105-545-5627	A1428	<80510>	.ROTOR AND BEARING ASSEMBLY..		EA		1	*	*	*			114F	
P	H		3110-155-9630	C62921	<80510>	..BEARING,BALL,ANNULAR.....		EA		2	*	*	*		*	114F	77
P	H		6615-322-5562	C62402X	<80510>	..SPACER AND SLINGER ASSEMBLY		EA		1	*	*	*		*	114F	78
P	H		6105-557-3218	C62912X	<80510>	..ROTOR ASSEMBLY.....		EA		1	*	*	*		*	114F	
X1				C62911X	<80510>	...ARMATURE,MOTOR ASSEMBLY...		EA		1						114F	
						ATTACHING PARTS											
			5305-273-2187	AN501B1-2	<88044>	...SCREW,MACHINE.....		GR		2	*	*	*		*	114F	79
						---*---											
P	H		6615-398-0057	C62116X	<80510>	....GOVERNOR ASSEMBLY,.....		EA		1	*	*	*		*	114F	80
						INDICATOR											
P	H		6615-632-3262	C62917X	<80510>	....ARMATURE ASSEMBLY.....		EA		1	*	*	*		*	114F	81
P	H		5970-060-8011	C62115	<80510>	...INSULATION,GOVERNOR.....		EA		1	*	*	*		*	114F	82
P	H		6615-322-5563	C62703	<80510>	...ROTOR GYRO.....		EA		1	*	*	*		*	114F	83
			5330-227-9483	AN6227B9	<88044>	.PACKING,PREFORMED.....		EA		1	*	*	*		*	114F	84
P	H		6615-049-3977	C62106X	<80510>	.LEAD ASSEMBLY,MOTOR BRUSH...		EA		1	*	*	*		*	114F	85
						ATTACHING PARTS											
			5305-145-6921	AN501B1-10	<88044>	.SCREW,MACHINE.....		EA		2	*	*	*		*	114F	86
			5310-579-1521	AN935-1L	<88044>	.WASHER,LOCK.....		EA		2	*	*	*		*	114F	87
P	H		5310-050-2254	502254	<80510>	.WASHER,PLAIN.....		LB		2	*	*	*		*	114F	88
						---*---											
P	H		6615-662-9496	C62907	<80510>	.BUSHING,SLEEVE.....		EA		2	*	*	*		*	114F	89
			5305-717-6950	MS51963-9	<96906>	.SETSCREW.....		EA		1	*	*	*		*	114F	90
P	H		6610-536-4974	C62103	<80510>	.PLUG,INDICATOR.....		EA		1	*	*	REF		*	114F	91
P	H		5310-330-8308	C62501	<80510>	.NUT,MOTOR ADJUSTING.....		EA		1	*	*	*		*	114F	92
P	H		6615-727-6970	A1569	<80510>	.STATOR,ROTOR.....		EA		1	*	*	*		*	114F	
P	H		5305-207-3958	C62502	<80510>	..SCREW,MACHINE.....		EA		1	*	*	*		*	114F	93
P	H		5330-613-5463	C62101	<80510>	..SUPPORT,TRIMMER,SCREW.....		EA		1	*	*	*		*	114F	94
						ATTACHING PARTS											
			5305-145-6917	AN500B2-3	<88044>	..SCREW,MACHINE.....		HD		2	*	*	*		*	114F	95
			5310-515-8000	MS35337-39	<96906>	..WASHER,LOCK.....		HD		2	*	*	*		*	114F	96
						---*---											
P	H		5310-333-5681	C62504	<80510>	..NUT,PLAIN,HEXAGON.....		EA		2	*	*	*		*	114F	97
P	H		5310-333-8123	C62505	<80510>	..NUT,SELF-LOCKING,HEXAGON...		EA		2	*	*	*		*	114F	
P	H		6610-583-9666	C62903X	<80510>	..LEAD ASSEMBLY,GROUND.....		EA		1	*	*	*		*	114F	98

(1) SOURCE, MAINT AND REC CODE (a) SOURCE CODE	(b) MAINT LEVEL	(c) REC CODE	(2) FEDERAL STOCK NUMBER	REFERENCE NUMBER	(3) DESCRIPTION	MODELS USABLE ON CH-34C	(4) UNIT OF ISSUE	(5) QTY INC IN UNIT PACK	(6) QTY INC IN UNIT	(7) 30-DAY DS/GS MAINT ALW (a) 1-20	(b) 21-50	(c) 51-100	(8) 1-YR ALW PER 100 EQUIP CNTGCY	(9) DEPOT MAINT ALW PER 100 EQUIP	(10) ILLUSTRATION (a) FIG NO	(b) ITEM NO
					CONTINUED										114F	98
					ATTACHING PARTS											
			5310-720-8392	AN340B4 <88044>	..NUT,PLAIN,HEXAGON.....		HD		1	*	*	*		*	114F	99
			5305-579-3701	AN501B1-6 <88044>	..SCREW,MACHINE.....		EA		1	*	*	*		*	114F	100
			5310-579-1521	AN935-1L <88044>	..WASHER,LOCK.....		EA		1	*	*	*		*	114F	101
					---*---											
P	H		5970-329-0405	C62403 <80510>	..INSULATOR,BUSHING.....		EA		1	*	*	*		*	114F	102
			5310-720-8392	AN340B4 <88044>	..NUT,PLAIN,HEXAGON.....		HD		1	*	*	*		*	114F	103
			5310-551-7770	MS35337-40 <96906>	..WASHER,LOCK.....		EA		1	*	*	*		*	114F	104
P	H		5307-206-8810	C62503 <80510>	..STUD,PLAIN.....		EA		2	*	*	*		*	114F	105
P	H		6615-337-5461	C62802X <80510>	..SUPPORT ASSEMBLY,NEGATIVE..		EA		1	*	*	*		*	114F	106
					ATTACHING PARTS											
			5305-812-3549	MS35214-5 <96906>	..SCREW,MACHINE.....		HD		2	*	*	*		*	114F	107
					---*---											
P	H		5940-600-1226	C62111X <80510>	..SUPPORT ASSEMBLY-5 PER PKG.		PG		1	*	*	*		*	114F	108
					ATTACHING PARTS											
			5305-812-3549	MS35214-5 <96906>	..SCREW,MACHINE.....		HD		2	*	*	*		*	114F	109
					---*---											
P	H		5999-049-3986	C62702 <80510>	..MAGNET,MOTOR.....		EA		1	*	*	*		*	114F	110
P	H		6615-313-2009	C62109 <80510>	..INSULATION,WASHER.....		EA		1	*	*	*		*	114F	111
P	H		6615-678-1936	C62701 <80510>	..END BELL,ELECTRICAL.....		EA		1	*	*	*		*	114F	112
					ROTATING EQUIPMENT											
		R	6610-515-5845	B4B <79318>	INDICATOR,TURN AND SLIP.....		EA		1						114G	
					SEE FIG.114 FOR NHA											
		R	6610-247-9350	B4BD <79318>	INDICATOR,TURN AND SLIP.....		EA		1						114G	
					SEE FIG.114 FOR NHA											
		R	6610-526-4716	B4BK <79318>	INDICATOR,TURN AND SLIP.....		EA		1						114G	
					SEE FIG.114 FOR NHA											
X2	H			B4B115-7 <79318>	.COVER ASSEMBLY.....NOTE 1		EA		1						114G	
P	H		5310-373-9412	B4-12 <79318>	.NUT,COVER.....		EA		1	*	*	*		*	114G	1
P	H		6610-373-9414	B4A14 <79318>	..COVER.....		EA		1	*	*	*		*	114G	2
P	H		6610-914-6521	B4B216-2 <79318>	..PLATE,IDENTIFICATION.NOTE 1		EA		1	*	*	*		*	114G	3
				B4B216-1 <79318>	..NAMEPLATE.....NOTE 2		EA		1						114G	
P	H		6610-920-9344	B4B245-1 <02282>	..PLATE,IDENTIFICATION.NOTE 3		EA		1	*	*	*		*	114G	
					ATTACHING PARTS											
P	H		5320-862-2816	SS96B2-3 <79318>	..RIVET,TUBULAR.....		EA		4	*	*	*		*	114G	4
					---*---											
P	H		6610-953-2402	B4A126 <79318>	.BEZEL ASSEMBLY.....		EA		1	*	*	*		*	114G	
					ATTACHING PARTS											
			5305-639-0914	AN500B4-4 <88044>	.SCREW,MACHINE.....NOTE 1 & 2		EA		8	*	*	*		*	114G	5
			5310-551-7770	MS35337-40 <96906>	.WASHER,LOCK.....		EA		8	*	*	*		*	114G	6
					---*---											
P	H		6695-334-6992	B4A1B24 <79318>	..BEZEL.....		EA		1	*	*	*		*	114G	7
P	H		6610-371-1506	13683 <79318>	..GASKET,BEZEL.....		EA		1	*	*	2		*	114G	8
			5355-538-6382	MS28105-16 <96906>	..WINDOW,DIAL.....		VX		1	*	*	*		*	114G	9
				B4A115-9 <79318>	.INDICATING ASSEMBLY...NOTE 1		EA		1						114G	

(1) SOURCE, MAINT AND REC CODE (a) SOURCE CODE	(b) MAINT LEVEL	(c) REC CODE	(2) FEDERAL STOCK NUMBER	REFERENCE NUMBER	(3) DESCRIPTION	MODELS USABLE ON CH-34C	(4) UNIT OF ISSUE	(5) QTY INC IN UNIT PACK	(6) QTY INC IN UNIT	(7) 30-DAY DS GS MAINT ALWPER (a) 1-20	(b) 21-50	(c) 51-100	(8) 1-YR ALWPER 100 EQUIP CNTGCY	(9) DEPOT MAINT ALWPER 100 EQUIP	(10) ILLUSTRATION (a) FIG NO	(b) ITEM NO
					CONTINUED										114G	
					ATTACHING PARTS											
			5305-407-8551	MS35214-2 <96906>	.SCREW,MACHINE.....NOTE 1		HD		2	*	*	*		*	114G	10
			5305-059-8226	MS35214-1 <96906>	.SCREW,MACHINE.....NOTE 2 & 3		HD		2	*	*	*		*	114G	
					---*---											
P	H		6610-941-0513	B4-17-9 <79318>	..DIAL ASSEMBLY.....NOTE 1		EA		1	*	*	*		*	114G	
P	H		6610-927-7416	B4-17-4 <79318>	..DIAL ASSEMBLY.....NOTE 2		EA		1	*	*	*		*	114G	
P	H		6610-973-2413	B4B143-1 <79318>	..DIAL ASSEMBLY.....NOTE 3		EA		1	*	*	*		*	114G	
					ATTACHING PARTS											
			5305-059-8226	MS35214-1 <96906>	..SCREW,MACHINE.....		HD		1	*	*	*		*	114G	11
					---*---											
P	H		6610-953-2383	B4-29 <79318>	...DIAL.....NOTE 1		EA		1	*	*	*		*	114G	12
P	H		5355-284-7526	B4-29-2 <79318>	...MASK,DIAL.....NOTE 2		EA		1	*	*	*		*	114G	
X1				B4B242 <02282>	...DIAL.....NOTE 3		EA		1						114G	
P	H		5340-290-3940	17221 <79318>	...SPRING,HELICAL,EXTENSION..		EA		2	*	*	*		*	114G	13
X1				11-7206 <79318>	...RETAINER,INCLINOMETER.....		EA		1						114G	14
X1				13623 <79318>	...CARD,REFLECTOR.....NOTE 1		EA		1						114G	15
X1				13623-1 <79318>	...CARD,REFLECTOR..NOTE 2 & 3		EA		1						114G	
X1				13620 <79318>	...INCLINOMETER.....		EA		1						114G	16
P	H		6610-953-2390	11-7213-1 <79318>	...WIRE,DIAL.....NOTE 1		EA		2	*	*	2		*	114G	17
				11-7213-2 <79318>	...WIRE DIAL ASSEMBLY.....		EA		2						114G	
					NOTE 2 & 3											
P	H		6610-941-0511	11-7217-1 <79318>	..POINTER ASSEMBLY.....NOTE 1		EA		1	*	*	*		*	114G	
P	H		6610-933-5621	11-7217-2 <79318>	..POINTER AND PIVOT ASSEMBLY.		EA		1	*	*	*		*	114G	
					NOTE 2 & 3											
X1				B4A116 <79318>	...POINTER UNIT.....NOTE 1		EA		1						114G	18
X1				B4A116-1 <79318>	...POINTER UNIT....NOTE 2 & 3		EA		1						114G	
X1				12-7216 <79318>	...PIVOT,POINTER.....		EA		1						114G	19
					ATTACHING PARTS											
P	H		5340-862-2795	SS154-6 <79318>	...RING,RETAINING.....		EA		1	*	*	*		*	114G	20
					---*---											
P	H		5340-487-8213	17210-1 <79318>	...SHIM.....		EA		AR	*	*	*		*	114G	21
P	H		5310-595-6070	C64104-2 <80510>	...WASHER,FLAT.....		EA		AR	*	*	*		*	114G	
P	H		5310-487-8215	17210-3 <79318>	...WASHER,FLAT.....		EA		AR	*	*	*		*	114G	
P	H		6610-509-5167	B4-110 <79318>	.SPRING,HELICAL,COMPRESSION..		EA		1	*	*	*		*	114G	22
P	H		6610-373-9410	B3A114 <79318>	.ANCHOR ASSEMBLY.....		EA		2	*	*	*		*	114G	
P	H		6610-973-2404	SS600 <79318>	..HOLDER,SPRING INDICATOR....		EA		1	*	*	*		*	114G	23
P	H		3110-691-1357	RS77R2S1512AN0G <43334>	..BEARING,BALL,ANNULAR.....		EA		1	*	*	*		*	114G	24
			5305-206-0514	AN515-5-5 <88044>	.SCREW,MACHINE.....		HD		2	*	*	*		*	114G	25
P	H		5310-286-8884	PB12036 <19315>	.WASHER,FLAT.....		EA		4	*	*	*		*	114G	26
			5310-551-7770	MS35337-40 <96906>	.WASHER,LOCK.....		EA		4	*	*	*		*	114G	27
					---*---											
P	H		6610-049-3989	C63106X <80510>	.DAMPING UNIT.....		EA		1	*	REF	REF		*	114G	
P	H		6610-953-2397	B4-128 <79318>	.GROUND,COVER FRONT.....		EA		1	*	*	*		*	114G	31
					ATTACHING PARTS											
			5305-828-7659	MS35273-12 <96906>	.SCREW,MACHINE.....NOTE 1 & 2		EA		4	*	*	*		*	114G	32
P	H		5305-862-9302	SS500B4-6 <79318>	.SCREW.....NOTE 3		EA		4	*	*	*		*	114G	
			5310-551-7770	MS35337-40 <96906>	.WASHER,LOCK.....		EA		4	*	*	*		*	114G	33
					---*---											
P	H		5305-862-9298	17252 <79318>	.SCREW,MACHINE.....		EA		1	*	*	*		*	114G	34
			5310-543-5060	MS35338-39 <96906>	.WASHER,LOCK.....		HD		1	*	*	*		*	114G	35
P	H		5340-864-3488	17253 <02282>	.SPRING,ADJUSTING SCREW LOCK.		EA		1	*	*	*		*	114G	36

(1) SOURCE, MAINT AND REC CODE (a) SOURCE CODE	(b) MAINT LEVEL	(c) REC CODE	(2) FEDERAL STOCK NUMBER	REFERENCE NUMBER		(3) DESCRIPTION	MODELS USABLE ON CH-34C	(4) UNIT OF ISSUE	(5) QTY INC IN UNIT PACK	(6) QTY INC IN UNIT	(7) 30-DAY DS/GS MAINT ALW (a) 1-20	(b) 21-50	(c) 51-100	(8) 1-YR ALW PER 100 EQUIP CNTGCY	(9) DEPOT MAINT ALW PER 100 EQUIP	(10) ILLUSTRATION (a) FIG NO	(b) ITEM NO
P	H		5330-487-8205	SS164	<79318>	.WASHER,NONMETALLIC.....		EA		1	*	*	*		*	114G	37
P	H		6610-373-9415	B4B119	<79318>	.FILTER ASSEMBLY.....		EA		1	*	*	*		*	114G	38
						ATTACHING PARTS											
			5305-839-4514	MS35273-27	<96906>	.SCREW,MACHINE.....NOTE 1 & 2		EA		2	*	*	*		*	114G	39
X1				SS500B6-10	<79318>	.SCREW,MACHINE.....NOTE 3		EA		2						114G	
			5310-045-4007	MS35338-41	<96906>	.WASHER,LOCK.....		HD		2	*	*	*		*	114G	40
P	H		5310-871-3470	B4A121	<02282>	.WASHER,PLAIN.....		EA		2	*	*	*		*	114G	41
						---*---											
P	H		6610-664-2190	B4A118	<79318>	..DISK,SOLID,PLAIN.....		EA		1	*	*	*		*	114G	42
P	H		5310-862-4882	SS355C80-30	<79318>	.WASHER,INSULATING.....		EA		1	*	*	*		*	114G	43
P	H		6615-957-7458	B4B13	<79318>	.PLATE ASSEMBLY,REAR.....		EA		1	*	*	*		*	114G	
						NOTE 1 & 2											
						ATTACHING PARTS											
			5305-145-7676	AN500B4-5	<88044>	.SCREW,MACHINE.....NOTE 1 & 2		GR		4	*	*	*		*	114G	44
P	H		5305-862-4895	SS500B4-10	<02282>	.SCREW,MACHINE.....NOTE 3		EA		2	*	*	*		*	114G	
			5310-551-7770	MS35337-40	<96906>	.WASHER,LOCK.....		EA		4	*	*	*		*	114G	45
						---*---											
P	H		6610-941-0515	B4B184	<79318>	..PLATE,REAR.....NOTE 1 & 2		EA		1	*	*	*		*	114G	46
P	H		5310-863-7961	17239	<02282>	..NUT,PIVOT LOCK.....		EA		1	*	*	*		*	114G	47
P	H		6610-373-9438	17240	<79318>	..PIVOT ASSEMBLY.....		EA		1	*	*	*		*	114G	48
P	H		3110-901-6349	R4SS5LTO	<70854>	.BEARING,BALL,ANNULAR.....		EA		2	*	*	*		*	114G	49
P	H		6615-957-7461	M5A	<79318>	.MOTOR ASSEMBLY,GYRO.....		EA		1	*	*	*		*	114G	
						NOTE 1 & 2											
P	H		6615-793-0189	M5AC	<79318>	.MOTOR ASSEMBLY,GYRO...NOTE 3		EA		1	*	*	*		*	114G	
P	H		6615-487-8208	11-7302	<79318>	..LEAD ASSEMBLY,BRUSH.....		EA		1	*	*	2		*	114G	50
P	H		3120-662-0831	11-7304	<79318>	..BEARING,SLEEVE.....		EA		2	*	*	*		*	114G	51
						ATTACHING PARTS											
			5305-145-6921	AN501B1-10	<88044>	..SCREW,MACHINE....NOTE 1 & 2		EA		2	*	*	*		*	114G	52
P	H		5305-862-4896	SS50181-20	<79318>	..SCREW,MACHINE.....NOTE 3		EA		2	*	*	*		*	114G	
P	H		5310-568-5022	SS356-1	<79318>	..WASHER,LOCK.....		EA		2	*	*	*		*	114G	53
P	H		1610-862-4872	SS116	<79318>	..SHIM.....		EA		2	*	*	2		*	114G	54
						---*---											
			5305-717-6950	MS51963-9	<96906>	..SETSCREW.....		EA		2	*	*	*		*	114G	55
P	H		6610-536-4974	C62103	<80510>	..PLUG,INDICATOR.....		EA		2	*	*	REF		*	114G	56
P	H		6615-166-7054	17358	<79318>	..CLAMP,ELECTRICAL LEAD.....		EA		1	*	*	*		*	114G	57
						ATTACHING PARTS											
			5305-145-7676	AN500B4-5	<88044>	..SCREW,MACHINE....NOTE 1 & 2		GR		2	*	*	*		*	114G	58
P	H		5305-862-4895	SS500B4-10	<02282>	..SCREW,MACHINE.....NOTE 3		EA		2	*	*	*		*	114G	
			5310-551-7770	MS35337-40	<96906>	..WASHER,LOCK.....		EA		2	*	*	*		*	114G	59
						---*---											
P	H		6615-049-3976	C62104X	<80510>	..LEAD ASSEMBLY.....		EA		1	*	*	*		*	114G	60
P	H		6615-953-2384	M5-131	<79318>	..NUT,MOTOR ADJUSTING.....		EA		2	*	*	*		*	114G	61
			5330-585-0871	AN123964	<88044>	..PACKING,PREFORMED.....		EA		2	*	*	*		*	114G	62
P	H		6615-953-2373	1B7336	<79318>	..END,GIMBAL.....NOTE 1 & 2		EA		1	*	*	*		*	114G	63
						ATTACHING PARTS											
			5305-145-7676	AN500B4-5	<88044>	..SCREW,MACHINE....NOTE 1 & 2		GR		2	*	*	*		*	114G	64
P	H		5305-862-4895	SS500B4-10	<02282>	..SCREW,MACHINE.....NOTE 3		EA		2	*	*	*		*	114G	
			5310-551-7770	MS35337-40	<96906>	..WASHER,LOCK.....		EA		2	*	*	*		*	114G	65
						---*---											
P	H		6615-373-9416	M5-125-3	<79318>	..ROTOR ASSEMBLY.....		EA		1	*	*	*		*	114G	66
			5305-273-2187	AN501B1-2	<88044>	...SCREW,MACHINE.....		GR		2	*	*	*		*	114G	68
P	H		3110-994-3280	R4SS4G2	<70854>	..BEARING,BALL,ANNULAR.....		EA		2	*	2	2		10	114G	69

(1) SOURCE, MAINT AND REC CODE (a) SOURCE CODE	(b) MAINT LEVEL	(c) REC CODE	(2) FEDERAL STOCK NUMBER	REFERENCE NUMBER	(3) DESCRIPTION	MODELS USABLE ON CH-34C	(4) UNIT OF ISSUE	(5) QTY INC IN UNIT PACK	(6) QTY INC IN UNIT	(7) 30-DAY DS GS MAINT ALW (a) 1-20	(b) 21-50	(c) 51-100	(8) 1-YR ALW PER 100 EQUIP CNTGCY	(9) DEPOT MAINT ALW PER 100 EQUIP	(10) ILLUSTRATION (a) FIG NO	(b) ITEM NO
P	H		6615-031-9031	11-7353 <79318>	..SPACER AND SLINGER ASSEMBLY		EA		1	*	*	*		*	114G	70
				M5A12-1 <79318>	..STATOR ASSEMBLY..NOTE 1 & 2		EA		1						114G	
P	H		5305-862-9301	17244 <79318>	...SCREW,TRIMMER.....		EA		1	*	*	*		*	114G	71
P	H		6615-953-2391	17245 <79318>	...SUPPORT.....		EA		1	*	*	*		*	114G	72
					ATTACHING PARTS											
			5305-145-6917	AN500B2-3 <88044>	...SCREW,MACHINE...NOTE 1 & 2		HD		2	*	*	*		*	114G	73
P	H		5305-862-4899	SS500B2-6 <79318>	...SCREW,MACHINE.....NOTE 3		EA		2	*	*	*		*	114G	
			5310-515-8000	MS35337-39 <96906>	...WASHER,LOCK.....		HD		2	*	*	*		*	114G	74
					---*---											
			5310-069-4255	MS21044E04 <96906>	...NUT,SELF-LOCKING,HEXAGON..		EA		4	*	*	*		*	114G	75
P	H		5310-487-8207	SS6185-4-9 <79318>	...NUT,SELF-LOCKING,HEXAGON..		EA		2	*	*	*		*	114G	
			5310-720-8392	MS20341-4A <96906>	...NUT,PLAIN,HEXAGON.....		HD		2	*	*	*		*	114G	76
			5310-551-7770	MS35337-40 <96906>	...WASHER,LOCK.....		EA		2	*	*	*		*	114G	77
P	H		6680-373-9426	11-7307 <79318>	...CONTACT ASSEMBLY.....		EA		1	*	*	*		*	114G	78
P	H		6615-031-9030	11-7305 <79318>	...BUSHING,SLEEVE.....		EA		1	*	*	*		*	114G	79
					ATTACHING PARTS											
			5305-579-3701	AN501B1-6 <88044>	...SCREW,MACHINE.....		EA		1	*	*	*		*	114G	80
P	H		5310-568-5022	SS356-1 <79318>	...WASHER,LOCK.....		EA		1	*	*	*		*	114G	81
					---*---											
P	H		5307-802-5701	11-7231 <79318>	...STUD,CONTINUOUS THREAD....		EA		2	*	*	*		*	114G	82
P	H		6610-869-8670	M5A16 <79318>	...HOUSING,MAGNET.....		EA		1	*	*	*		*	114G	83
P	H		6615-953-2412	187309 <79318>	...MAGNET,MOTOR.....		EA		1	*	*	*		*	114G	84
P	H		6615-373-9417	M5-128-1 <79318>	...SUPPORT ASSEMBLY.....		EA		1	*	*	*		*	114G	
					POSITIVE MOTOR BRUSH ATTACHING PARTS											
			5305-812-3549	MS35214-5 <96906>	...SCREW,MACHINE.....		HD		2	*	*	*		*	114G	85
					---*---											
P	H		6615-953-2388	M5-127 <79318>	....SUPPORT ASSEMBLY.....		EA		1	*	*	*		*	114G	
				11-7338 <79318>	.....SUPPORT,MOTOR BRUSH.....		EA		1						114G	86
P	H		5940-862-9332	SS99 <79318>	.....LUG,SOLDER.....		EA		1	*	*	*		*	114G	87
				11-7331 <79318>	.....PIVOT,BRUSH ARM.....		EA		1						114G	88
P	H		6615-613-5469	11-7334-1 <79318>	....ARM ASSEMBLY.....		EA		1	*	*	*		*	114G	89
					ATTACHING PARTS											
			5305-144-4066	AN520B1-2 <88044>	....SCREW,MACHINE.....		EA		1	*	*	*		*	114G	90
P	H		5310-568-5022	SS356-1 <79318>	....WASHER,LOCK.....		EA		1	*	*	*		*	114G	91
P	H		5310-053-9359	SS354B <79318>	....WASHER,PLAIN.....		EA		1	*	*	*		*	114G	92
					---*---											
P	H		5910-862-9334	M5-135 <79318>	....CONDENSER.....		EA		1	*	*	*		*	114G	93
P	H		5940-500-9759	SS100 <79318>	....TERMINAL,LUG.....		EA		1	*	*	*		*	114G	94
P	H		6615-373-9418	M5A13-1 <79318>	...SUPPORT ASSEMBLY.....		EA		1	*	*	*		*	114G	
					ATTACHING PARTS											
			5305-812-3549	MS35214-5 <96906>	...SCREW,MACHINE.....		HD		2	*	*	*		*	114G	95
					---*---											
				M5A14 <79318>	....SUPPORT SUBASSEMBLY.....		EA		1						114G	
				11-7338 <79318>	.....SUPPORT,MOTOR BRUSH.....		EA		1						114G	96
P	H		5940-862-9332	SS99 <79318>	.....LUG,SOLDER.....		EA		2	*	*	*		*	114G	97
				11-7331 <79318>	.....PIVOT,BRUSH ARM.....		EA		2						114G	98
P	H		6615-443-6951	M5-134-1 <79318>	....ARM ASSEMBLY.....		EA		1	*	*	*		*	114G	99
					ATTACHING PARTS											
			5305-144-4066	AN520B1-2 <88044>	....SCREW,MACHINE.....		EA		1	*	*	*		*	114G	100
P	H		5310-568-5022	SS356-1 <79318>	....WASHER,LOCK.....		EA		1	*	*	*		*	114G	101
P	H		5310-053-9359	SS354B <79318>	....WASHER,PLAIN.....		EA		1	*	*	*		*	114G	102

(1) SOURCE, MAINT AND REC CODE (a) SOURCE CODE	(b) MAINT LEVEL	(c) REC LEVEL	(2) FEDERAL STOCK NUMBER	REFERENCE NUMBER	(3) DESCRIPTION	MODELS USABLE ON CH-34C	(4) UNIT OF ISSUE	(5) QTY INC IN UNIT PACK	(6) QTY INC IN UNIT	(7) 30-DAY DS/GS MAINT ALW (a) 1-20	(b) 21-50	(c) 51-100	(8) 1-YR ALW PER 100 EQUIP CNTGCY	(9) DEPOT MAINT ALW PER 100 EQUIP	(10) ILLUSTRATION (a) FIG NO	(b) ITEM NO
					CONTINUED										114G	102
					---*---											
P	H		5910-862-9334	M5-135	<79318> ....CONDENSER.....		EA		1	*	*	*		*	114G	103
P	H		6615-953-2389	11-7324	<79318> ...INSULATION,MOTOR BRUSH....		EA		1	*	*	*		*	114G	104
P	H		6610-793-0114	41-7326-1	<79318> ...GIMBAL.....NOTE 1 & 2		EA		1	*	*	*		*	114G	105
				B4B25	<79318> .FRAME ASSEMBLY.....NOTE 1		EA		1						114G	
P	H		1560-603-4199	B3-137	<79318> ..SPRING,RESTRAINING.....		EA		1	*	*	*		*	114G	106
P	H		6610-953-4944	B3-113	<79318> ..CLAMP.....		EA		1	*	*	*		*	114G	107
					ATTACHING PARTS											
			5305-145-6917	AN500B2-3	<88044> ..SCREW,MACHINE....NOTE 1 & 2		HD		2	*	*	*		*	114G	108
P	H		5305-862-4899	SS500B2-6	<79318> ..SCREW,MACHINE.....NOTE 3		EA		2	*	*	*		*	114G	
			5310-515-8000	MS35337-39	<96906> ..WASHER,LOCK.....		HD		2	*	*	*		*	114G	109
					---*---											
P	H		6610-953-4945	B3-118	<79318> ..ANCHORAGE ASSEMBLY.....		EA		1	*	*	*		*	114G	
P	H		6610-167-3786	B3-115	<79318> ...ANCHORAGE,ZEROING SCREW...		EA		1	*	*	*		*	114G	110
P	H		5305-862-4901	SS411B2-10A	<79318> ...SCREW.....		EA		1	*	*	*		*	114G	111
P	H		5310-862-4882	SS355C80-30	<79318> ..WASHER.....		EA		1	*	*	*		*	114G	112
P	H		5310-373-9408	B3-117	<79318> ..NUT,PLAIN,ROUND.....		EA		1	*	*	*		*	114G	113
P	H		6610-953-2386	B3-140	<79318> ..PIVOT.....		EA		1	*	*	*		*	114G	114
					ATTACHING PARTS											
			5305-052-5946	MS35198-4	<96906> ..SCREW,MACHINE....NOTE 1 & 2		EA		1	*	*	*		*	114G	115
P	H		5305-862-4897	SS500B2-10	<79318> ..SCREW,MACHINE.....NOTE 3		EA		1	*	*	*		*	114G	
			5310-515-8000	MS35337-39	<96906> ..WASHER,LOCK.....NOTE 3		HD		1	*	*	*		*	114G	
P	H		1610-862-4872	SS116	<79318> ..SHIM.....NOTE 3		EA		1	*	*	REF		*	114G	
					---*---											
P	H		6610-166-7078	B3-141	<79318> ..ARM,SENSITIVE ADJUSTING....		EA		1	*	*	*		*	114G	116
P	H		6610-790-2330	B3-142	<79318> ..ARM,POINTER ZEROING.....		EA		1	*	*	*		*	114G	117
P	H		5305-207-9958	B3-146	<79318> ..SCREW,MACHINE.....		EA		1	*	*	*		*	114G	118
P	H		6610-373-9438	17240	<79318> ..PIVOT ASSEMBLY.....		EA		1	*	*	*		*	114G	119
P	H		5340-214-1433	SS1318	<79318> ..STRAP,RETAINING.....		EA		1	*	*	*		*	114G	120
					ATTACHING PARTS											
			5305-145-6917	AN500B2-2	<88044> ..SCREW,MACHINE....NOTE 1 & 2		HD		1	*	*	*		*	114G	121
P	H		5340-862-4892	SS500B2-4	<02282> ..MOUNTING ASSEMBLY....NOTE 3		EA		1	2	5	11		*	114G	
			5310-515-8000	MS35337-39	<96906> ..WASHER,LOCK.....		HD		1	*	*	*		*	114G	122
					---*---											
P	H		6610-953-2387	B4-140-1	<79318> ..BUMPER.....		EA		2	*	*	*		*	114G	123
P	H		5315-545-5628	B4A111	<79318> ..PIN,STRAIGHT,THREADED.....		EA		2	*	*	*		*	114G	124
X2	H			B4B46	<79318> ..FRAME.....NOTE 1 & 2		EA		1						114G	125
			5330-194-3720	AN6230B10	<88044> .PACKING,PREFORMED.....		EA		1	REF	REF	REF	REF	*	114G	126
					NOTE 1											
					U/O 6610-515-5845											
					NOTE 2											
					U/O 6610-247-9350											
					NOTE 3											
					U/O 6610-526-4716											

(1) SOURCE, MAINT AND REC CODE (a) SOURCE CODE	(b) MAINT LEVEL	(c) REC CODE	(2) FEDERAL STOCK NUMBER	REFERENCE NUMBER		(3) DESCRIPTION	MODELS USABLE ON CH-34C	(4) UNIT OF ISSUE	(5) QTY INC IN UNIT PACK	(6) QTY INC IN UNIT	(7) 30-DAY DS GS MAINT ALW (a) 1-20	(b) 21-50	(c) 51-100	(8) 1-YR ALW PER 100 EQUIP CNTGCY	(9) DEPOT MAINT ALW PER 100 EQUIP	(10) ILLUSTRATION (a) FIG NO	(b) ITEM NO
		R	6610-515-5843	B4A	<79318>	INDICATOR,TURN AND SLIP.....		EA		1						114H	
						SEE FIG.114 FOR NHA											
						ATTACHING PARTS											
			5305-059-8256	MS35214-31	<96906>	SCREW,MACHINE.....CODE A		HD		4	*	*	*		*	114H	1
						---*---											
X2	H		6610-861-2179	B4A12	<79318>	.COVER ASSEMBLY.....		EA		1	*	*	*		*	114H	
						ATTACHING PARTS											
P	H		5310-373-9412	B4-12	<79318>	.NUT,COVER.....		EA		1	*	*	*		*	114H	2
						---*---											
P	H		6610-373-9414	B4A14	<79318>	..COVER,INDICATOR.....		EA		1	*	*	*		*	114H	3
P	H		6610-953-2405	B4A15	<79318>	..PLATE,IDENTIFICATION.....		EA		1	*	*	*		*	114H	4
						ATTACHING PARTS											
			5305-253-5603	MS21318-1	<96906>	..SCREW,DRIVE.....CODE A		HD		4	*	*	*		*	114H	5
P	H		5320-012-2291	B4A123	<79318>	..RIVET,TUBULAR.....		EA		4	*	*	*		*	114H	
						CODE B,C,D & E											
						---*---											
P	H		6610-759-4159	12-7222	<79318>	.BEZEL ASSEMBLY....CODE A & C		EA		1	*	*	*		*	114H	
P	H		6610-953-2402	B4A126	<79318>	.BEZEL ASSEMBLY..CODE B,D & E		EA		1	*	*	*		*	114H	
						ATTACHING PARTS											
			5305-639-0914	AN500B4-4	<88044>	.SCREW,MACHINE.....		EA		8	*	*	*		*	114H	6
			5310-551-7770	MS35337-40	<96906>	.WASHER,LOCK.....		EA		8	*	*	*		*	114H	7
						---*---											
P	H		6695-334-6992	B4A1B24	<79318>	..BEZEL.....		EA		1	*	*	*		*	114H	8
P	H		6610-371-1506	13683	<79318>	..GASKET,BEZEL.....		EA		1	*	*	REF		*	114H	9
			5355-538-6382	MS28105-16	<96906>	..WINDOW,DIAL.....		VX		1	*	*	*		*	114H	10
P	H		6610-953-2415	12-7220	<79318>	..GASKET,GLASS.....CODE A		EA		1	*	*	*		*	114H	11
P	H		6610-953-2400	B4A115	<79318>	.INDICATING ASSEMBLY.....		EA		1	*	*	*		*	114H	
						ATTACHING PARTS											
			5305-407-8551	MS35214-2	<96906>	.SCREW,MACHINE.....		HD		2	*	*	*		*	114H	12
						---*---											
P	H		6610-953-2398	B4-17	<79318>	..DIAL ASSEMBLY.....		EA		1	*	*	*		*	114H	
						ATTACHING PARTS											
			5305-059-8226	MS35214-1	<96906>	..SCREW,MACHINE.....		HD		1	*	*	*		*	114H	13
						---*---											
P	H		6610-953-2383	B4-29	<79318>	...DIAL.....CODE B,C,D & E		EA		1	*	*	*		*	114H	14
P	H		6610-953-2399	B4-232-1	<79318>	...DIAL.....CODE A		EA		1	*	*	*		*	114H	
P	H		5340-290-3940	17221	<79318>	...SPRING,HELICAL,EXTENSION..		EA		2	*	*	*		*	114H	15
P	H		6610-953-2413	11-7205	<79318>	...INCLINOMETER ASSEMBLY.....		EA		1	*	*	*		*	114H	
X1				11-7206	<79318>	....RETAINER,INCLINOMETER....		EA		1						114H	16
X1				13623	<79318>	....CARD.....		EA		1						114H	17
X1				13620	<79318>	....INCLINOMETER.....		EA		1						114H	18
						ATTACHING PARTS											
P	H		6610-953-2390	11-7213-1	<79318>	....WIRE,DIAL ASSEMBLY.....		EA		2	*	*	REF		*	114H	19
						---*---											
P	H		6610-213-8544	12-7217	<79318>	..POINTER AND PIVOT ASSEMBLY.		EA		1	*	*	*		*	114H	
P	H		5340-862-2795	SS154-6	<79318>	...RING,RETAINING.....		EA		1	*	*	*		*	114H	22
						---*---											
P	H		5340-487-8213	17210-1	<79318>	...SHIM.....		EA		AR	*	*	*		*	114H	23
P	H		5310-595-6070	C64104-2	<80510>	...WASHER,FLAT.....		EA		AR	*	*	*		*	114H	
P	H		5310-487-8215	17210-3	<79318>	...WASHER,FLAT.....		EA		AR	*	*	*		*	114H	
P	H		6610-509-5167	B4-110	<79318>	.SPRING,HELICAL,COMPRESSION..		EA		1	*	*	*		*	114H	24
P	H		6610-953-2396	B3-144	<79318>	.ANCHOR ASSEMBLY.....		EA		2	*	*	*		*	114H	

(1) SOURCE, MAINT AND REC CODE (a) SOURCE CODE	(b) MAINT LEVEL	(c) REC CODE	(2) FEDERAL STOCK NUMBER	(3) DESCRIPTION REFERENCE NUMBER			MODELS USABLE ON CH-34C	(4) UNIT OF ISSUE	(5) QTY INC IN UNIT PACK	(6) QTY INC IN UNIT	(7) 30-DAY DS GS MAINT ALW (a) 1-20	(b) 21-50	(c) 51-100	(8) 1-YR ALW PER 100 EQUIP CNTGCY	(9) DEPOT MAINT ALW PER 100 EQUIP	(10) ILLUSTRATION (a) FIG NO	(b) ITEM NO
P	H		6610-953-2394	B3-114	<79318>	..ANCHOR.....		EA		1	*	*	*		*	114H	25
P	H		3110-691-1357	RS77R2S1512AN0G	<43334>	..BEARING,BALL,ANNULAR.....		EA		1	*	*	*		*	114H	26
P	H		5340-026-9050	B4-113	<79318>	.SHIM.....		EA		4	*	*	*		*	114H	27
				ATTACHING PARTS													
			5305-206-0514	AN515-5-5	<88044>	.SCREW,MACHINE.....		HD		2	*	*	*		*	114H	28
			5310-045-4007	MS35338-41	<96906>	.WASHER,LOCK.....		HD		2	*	*	*		*	114H	29
				---*---													
P	H		6610-049-3989	C63106X	<80510>	.DAMPING UNIT.....		EA		1	*	REF	REF		*	114H	
P	H		6610-953-2397	B4-128	<79318>	.GROUND,COVER,FRONT.....		EA		1	*	*	*		*	114H	32
				ATTACHING PARTS													
			5305-828-7659	MS35273-12	<96906>	.SCREW,MACHINE.....		EA		4	*	*	*		*	114H	33
			5310-551-7770	MS35337-40	<96906>	.WASHER,LOCK.....		EA		4	*	*	*		*	114H	34
				---*---													
P	H		5305-862-9298	17252	<79318>	.SCREW,MACHINE.....		EA		1	*	*	*		*	114H	35
P	H		5340-864-3488	17253	<02282>	.SPRING,ADJUSTING SCREW.....		EA		1	*	*	*		*	114H	36
P	H		5330-487-8205	SS164	<79318>	.WASHER,NONMETALLIC.....		EA		1	*	*	*		*	114H	37
P	H		6610-953-2416	B4A18	<79318>	.PLATE ASSEMBLY,REAR.....		EA		1	*	*	*		*	114H	
				ATTACHING PARTS													
			5305-145-7676	AN500B4-5	<88044>	.SCREW,MACHINE.....		GR		4	*	*	*		*	114H	38
			5310-551-7770	MS35337-40	<96906>	.WASHER,LOCK.....		EA		4	*	*	*		*	114H	39
				---*---													
P	H		5940-723-3302	4014	<77147>	..TERMINAL,LUG.....		PG		1	*	*	*		*	114H	40
P	H		6610-953-2401	B4A119	<79318>	..FILTER ASSEMBLY.....		EA		1	*	*	*		*	114H	41
				CODE A,B,C & D													
P	H		6610-953-2404	B4A136	<79318>	..FILTER ASSEMBLY.....CODE E		EA		1	*	*	*		*	114H	
				ATTACHING PARTS													
			5305-839-4514	MS35273-27	<96906>	..SCREW,MACHINE.....		EA		2	*	*	*		*	114H	42
			5310-045-4007	MS35338-41	<96906>	..WASHER,LOCK.....		HD		2	*	*	*		*	114H	43
P	H		5310-871-3470	B4A121	<02282>	..WASHER,PLAIN.....		EA		2	*	*	*		*	114H	44
				---*---													
P	H		6610-664-2190	B4A118	<79318>	..DISK,SOLID,PLAIN.....		EA		1	*	*	*		*	114H	45
P	H		6610-953-2406	B4A19	<79318>	..PLATE,REAR.....		EA		1	*	*	*		*	114H	46
P	H		5310-862-4882	SS355C80-30	<02282>	..WASHER.....		EA		1	*	*	*		*	114H	47
P	H		5310-863-7961	17239	<02282>	..NUT,PIVOT LOCK.....		EA		1	*	*	*		*	114H	48
P	H		6610-373-9438	17240	<79318>	..PIVOT ASSEMBLY.....		EA		1	*	*	*		*	114H	49
P	H		3110-155-9635	R4SSLT0	<70854>	.BEARING,BALL,ANNULAR.....		EA		2	*	*	*		*	114H	50
				M5	<79318>	.MOTOR ASSEMBLY,GYRO.....		EA		1						114H	
P	H		6615-487-8208	11-7302	<79318>	..LEAD ASSEMBLY,BRUSH.....		EA		1	*	*	REF		*	114H	51
P	H		3120-662-0831	11-7304	<79318>	..BEARING,SLEEVE.....		EA		2	*	*	*		*	114H	52
				ATTACHING PARTS													
			5310-579-1521	AN935-1L	<88044>	..WASHER,LOCK.....		EA		2	*	*	*		*	114H	54
				---*---													
			5305-717-6950	MS51963-9	<96906>	..SETSCREW.....		EA		2	*	*	*		*	114H	55
P	H		6610-536-4974	C62103	<80510>	..PLUG,INDICATOR.....		EA		2	*	*	REF		*	114H	56
P	H		6615-166-7054	17358	<79318>	..CLAMP,ELECTRIC,LEAD.....		EA		1	*	*	*		*	114H	57
				ATTACHING PARTS													
			5305-145-7676	AN500B4-5	<88044>	..SCREW,MACHINE.....		GR		2	*	*	*		*	114H	58
			5310-551-7770	MS35337-40	<96906>	..WASHER,LOCK.....		EA		2	*	*	*		*	114H	59
				---*---													
P	H		6615-049-3976	C62104X	<80510>	..LEAD ASSEMBLY.....		EA		1	*	*	*		*	114H	60
P	H		6615-953-2384	M5-131	<79318>	..NUT,MOTOR ADJUSTING.....		EA		2	*	*	*		*	114H	61
P	H		5330-585-0871	AN123964	<88044>	..PACKING,PREFORMED.....		EA		2	*	*	*		*	114H	62

(1) SOURCE, MAINT AND REC CODE (a) SOURCE CODE	(b) MAINT LEVEL	(c) REC CODE	(2) FEDERAL STOCK NUMBER	REFERENCE NUMBER		(3) DESCRIPTION	MODELS USABLE ON CH-34C	(4) UNIT OF ISSUE	(5) QTY INC IN UNIT PACK	(6) QTY INC IN UNIT	(7) 30-DAY DS GS MAINT ALW (a) 1-20	(b) 21-50	(c) 51-100	(8) 1-YR ALWPER 100 EQUIP CNTGCY	(9) DEPOT MAINT ALWPER 100 EQUIP	(10) ILLUSTRATION (a) FIG NO	(b) ITEM NO
P	H		6615-953-2373	1B7336	<79318>	..END,GIMBAL.....		EA		1	*	*	*		*	114H	63
						ATTACHING PARTS											
			5305-145-7676	AN500B4-5	<88044>	..SCREW,MACHINE.....		GR		2	*	*	*		*	114H	64
			5310-551-7770	MS35337-40	<96906>	..WASHER,LOCK.....		EA		2	*	*	*		*	114H	65
						---*---											
P	H		6615-373-9416	M5-125-3	<79318>	..ROTOR ASSEMBLY.....		EA		1	*	*	*		*	114H	66
P	H		6615-443-6964	17322	<79318>	...SUPPORT ASSEMBLY,GOVERNOR.		EA		1	*	*	*		*	114H	67
						ATTACHING PARTS											
			5305-273-2187	AN501B1-2	<88044>	...SCREW,MACHINE.....		GR		2	*	*	*		*	114H	68
						---*---											
P	H		3110-155-9634	R4SSLTG	<70854>	..BEARING,BALL,ANNULAR.....		EA		2	*	*	*		*	114H	69
P	H		5310-180-8925	17334	<79318>	..WASHER,FLAT.....		EA		1	*	*	*		*	114H	70
P	H		6615-953-2409	M5-111	<79318>	..STATOR ASSEMBLY.....		EA		1	*	*	*		*	114H	
P	H		5305-862-9301	17244	<79318>	...SCREW,TRIMMER.....		EA		1	*	*	*		*	114H	71
P	H		6615-953-2391	17245	<79318>	...SUPPORT.....		EA		1	*	*	*		*	114H	72
						ATTACHING PARTS											
			5305-145-6917	AN500B2-3	<88044>	...SCREW,MACHINE.....		HD		2	*	*	*		*	114H	73
			5310-515-8000	MS35337-39	<96906>	...WASHER,LOCK.....		HD		2	*	*	*		*	114H	74
						---*---											
			5310-069-4255	MS21044E04	<96906>	...NUT,SELF-LOCKING,HEXAGON..		EA		4	*	*	*		*	114H	75
P	H		5310-487-8207	SS61B5-4-9	<79318>	...NUT,SELF-LOCKING,HEXAGON..		EA		2	*	*	*		*	114H	
			5310-720-8392	MS20341-4A	<96906>	...NUT,PLAIN,HEXAGON.....		HD		2	*	*	*		*	114H	76
			5310-551-7770	MS35337-40	<96906>	...WASHER,LOCK.....		EA		2	*	*	*		*	114H	77
P	H		6615-953-2410	M5-119	<79318>	...LEAD ASSEMBLY,GROUND.....		EA		1	*	*	*		*	114H	78
						ATTACHING PARTS											
			5305-579-4828	AN501B1-4	<88044>	...SCREW,MACHINE.....		EA		1	*	*	*		*	114H	79
			5310-579-1521	AN935-1L	<88044>	...WASHER,LOCK.....		EA		1	*	*	*		*	114H	80
						---*---											
P	H		6615-167-2891	M5-120	<79318>	...CONTACT,GROUND.....		EA		1	*	*	*		*	114H	81
P	H		5307-802-5701	11-7231	<79318>	...STUD,CONTINUOUS THREAD....		EA		2	*	*	*		*	114H	82
P	H		6615-953-2412	1B7309	<79318>	...MAGNET,MOTOR.....		EA		1	*	*	*		*	114H	83
P	H		6615-953-2408	M5-1B16	<79318>	...HOUSING,MAGNET.....		EA		1	*	*	*		*	114H	84
P	H		6615-181-5642	M5-128	<79318>	...SUPPORT ASSEMBLY.....		EA		1	*	*	*		*	114H	
						ATTACHING PARTS											
			5305-812-3549	MS35214-5	<96906>	...SCREW,MACHINE.....		HD		2	*	*	*		*	114H	85
						---*---											
P	H		6615-953-2388	M5-127	<79318>	....SUPPORT ASSEMBLY.....		EA		1	*	*	*		*	114H	86
P	H		5940-500-9759	SS100	<79318>	....TERMINAL LUG.....		EA		1	*	*	*		*	114H	88
P	H		6615-613-5469	11-7334-1	<79318>	....ARM ASSEMBLY,MOTOR BRUSH.		EA		1	*	*	*		*	114H	89
						ATTACHING PARTS											
			5305-144-4066	AN520B1-2	<88044>	....SCREW,MACHINE.....		EA		1	*	*	*		*	114H	90
			5310-579-1521	AN935-1L	<88044>	....WASHER,LOCK.....		EA		1	*	*	*		*	114H	91
P	H		5310-053-9359	SS354B	<79318>	....WASHER,PLAIN.....		EA		1	*	*	*		*	114H	92
						---*---											
P	H		6615-181-5395	M5-123	<79318>	...SUPPORT ASSEMBLY.....		EA		1	*	*	*		*	114H	
						ATTACHING PARTS											
			5305-812-3549	MS35214-5	<96906>	...SCREW,MACHINE.....		HD		2	*	*	*		*	114H	93
						---*---											
P	H		6615-953-2411	M5-129	<79318>	....SUPPORT SUBASSEMBLY.....		EA		1	*	*	*		*	114H	94
P	H		6615-443-6951	M5-134	<79318>	....ARM ASSEMBLY,MOTOR BRUSH.		EA		1	*	*	*		*	114H	95
						ATTACHING PARTS											
			5305-144-4066	AN520B1-2	<88044>	....SCREW,MACHINE.....		EA		1	*	*	*		*	114H	96

(1) SOURCE, MAINT AND REC CODE (a) SOURCE CODE	(b) MAINT LEVEL	(c) REC CODE	(2) FEDERAL STOCK NUMBER	REFERENCE NUMBER	(3) DESCRIPTION	MODELS USABLE ON CH-34C	(4) UNIT OF ISSUE	(5) QTY INC IN UNIT PACK	(6) QTY INC IN UNIT	(7) 30-DAY DS-GS MAINT ALW (a) 1-20	(b) 21-50	(c) 51-100	(8) 1-YR ALWPER 100 EQUIP CNTGCY	(9) DEPOT MAINT ALWPER 100 EQUIP	(10) ILLUSTRATION (a) FIG NO	(b) ITEM NO
			5310-579-1521	AN935-1L <88044>	....WASHER,LOCK.....		EA		1	*	*	*		*	114H	97
P	H		5310-053-9359	SS3548 <79318>	....WASHER,PLAIN.....		EA		1	*	*	*		*	114H	98
					---*---											
P	H		6615-953-2389	11-7324 <79318>	...INSULATION,MOTOR BRUSH....		EA		1	*	*	*		*	114H	99
P	H		6680-992-7160	41-7326 <79318>	...GIMBAL.....		EA		1	*	*	*		*	114H	100
			5330-194-3720	AN6230B10 <88044>	.PACKING,PREFORMED.....		EA		1	REF	REF	REF	REF	*	114H	101
				B4A210 <79318>	.FRAME ASSEMBLY.....		EA		1						114H	
P	H		1560-603-4199	B3-137 <79318>	..SPRING,RESTRAINING.....		EA		1	*	*	*		*	114H	102
P	H		6610-953-4944	B3-113 <79318>	..CLAMP.....		EA		1	*	*	*		*	114H	103
					ATTACHING PARTS											
			5305-145-6917	AN500B2-3 <88044>	..SCREW,MACHINE.....		HD		2	*	*	*		*	114H	104
			5310-515-8000	MS35337-39 <96906>	..WASHER,LOCK.....		HD		2	*	*	*		*	114H	105
					---*---											
P	H		6610-953-4945	B3-118 <79318>	..ANCHORAGE ASSEMBLY.....		EA		1	*	*	*		*	114H	
P	H		6610-167-3786	B3-115 <79318>	...ANCHORAGE,ZEROING SCREW...		EA		1	*	*	*		*	114H	106
P	H		5305-207-9958	B3-146 <79318>	...SCREW,MACHINE.....		EA		1	*	*	*		*	114H	107
P	H		5310-373-9408	B3-117 <79318>	..NUT,PLAIN,ROUND.....		EA		1	*	*	*		*	114H	108
P	H		6610-953-2395	B3-139 <79318>	..ARM ASSEMBLY,POINTER,.....		EA		1	*	*	*		*	114H	
					ZEROING											
P	H		6610-953-2386	B3-140 <79318>	...PIVOT.....		EA		1	*	*	*		*	114H	109
					ATTACHING PARTS											
			5305-052-5946	MS35198-4 <96906>	...SCREW,MACHINE.....		HD		1	*	*	*		*	114H	110
					---*---											
P	H		6610-166-7078	B3-141 <79318>	...ARM,SENSITIVE ADJUSTING...		EA		1	*	*	*		*	114H	111
P	H		6610-953-2393	B3-112 <79318>	...ARM,POINTER,ZEROING.....		EA		1	*	*	*		*	114H	112
P	H		5305-207-9958	B3-146 <79318>	...SCREW,MACHINE.....		EA		1	*	*	*		*	114H	113
P	H		6610-176-5438	17259 <79318>	..PIVOT ASSEMBLY,GIMBAL.....		EA		1	*	*	*		*	114H	114
P	H		6610-953-2387	B4-140-1 <79318>	..BUMPER.....		EA		2	*	*	*		*	114H	115
P	H		5315-545-5628	B4A111 <79318>	..PIN,STRAIGHT,HEADLESS.....		EA		2	*	*	*		*	114H	116
X2	H		6610-953-2407	B4A412 <79318>	..FRAME.....		EA		1	*	*	*		*	114H	117
					CODE A											
					U/O INDICATOR SERIAL NO.49-1											
					THRU 49-2654											
					CODE B											
					U/O INDICATOR SERIAL NO.											
					49-2565 THRU 49-2594											
					CODE C											
					U/O INDICATOR SERIAL NO.											
					49-2626 THRU 49-2640											
					CODE D											
					U/O INDICATOR SERIAL NO.											
					49-2641 THRU 49-3982											
					CODE E											
					U/O INDICATOR SERIAL NO.											
					49-3983 THRU 49-4217											

(1) SOURCE, MAINT AND REC CODE (a) SOURCE CODE	(b) MAINT LEVEL	(c) REC CODE	(2) FEDERAL STOCK NUMBER	(3) DESCRIPTION REFERENCE NUMBER			MODELS USABLE ON CH-34C	(4) UNIT OF ISSUE	(5) QTY INC IN UNIT PACK	(6) QTY INC IN UNIT	(7) 30-DAY DS GS MAINT ALW (a) 1-20	(b) 21-50	(c) 51-100	(8) 1-YR ALW PER 100 EQUIP CNTGCY	(9) DEPOT MAINT ALW PER 100 EQUIP	(10) ILLUSTRATION (a) FIG NO	(b) ITEM NO
		R	6610-663-4136	B4	<79318>	INDICATOR,TURN AND SLIP.....		EA		1						114J	
						SEE FIG.113 & 114 FOR NHA											
			5305-059-8256	MS35214-31	<96906>	.SCREW,MACHINE.....		HD		4	*	*	*		*	114J	1
P	H		5310-863-7959	B4-12	<02282>	.NUT,COVER.....		EA		1	*	*	*		*	114J	2
			5305-253-5603	MS21318-1	<96906>	..SCREW,DRIVE.....		HD		4	*	*	*		*	114J	3
			5305-639-0914	AN500B4-4	<88044>	.SCREW,MACHINE.....		EA		8	*	*	*		*	114J	4
			5310-551-7770	MS35337-40	<96906>	.WASHER,LOCK.....		EA		8	*	*	*		*	114J	5
P	H		6695-334-6992	B4A1B24	<79318>	..BEZEL.....		EA		1	*	*	*		*	114J	6
P	H		6610-371-1506	13683	<79318>	..GASKET,BEZEL.....		EA		1	*	*	*		*	114J	7
			5355-538-6382	MS28105-16	<96906>	..WINDOW,DIAL.....		VX		1	*	*	*		*	114J	8
			5305-407-8551	MS35214-2	<96906>	.SCREW,MACHINE.....		HD		2	*	*	*		*	114J	9
P	H		6610-953-2398	B4-17	<79318>	..DIAL ASSEMBLY.....		EA		1	*	*	*		*	114J	
						ATTACHING PARTS											
			5305-059-8226	MS35214-1	<96906>	..SCREW,MACHINE.....		HD		1	*	*	*		*	114J	10
						---*---											
P	H		6610-953-2383	B4-29	<79318>	...DIAL.....		EA		1	*	*	*		*	114J	11
P	H		5340-290-3940	17221	<79318>	...SPRING,HELICAL,EXTENSION..		EA		2	*	*	*		*	114J	12
P	H		6610-953-2413	11-7205	<79318>	...INCLINOMETER ASSEMBLY.....		EA		1	*	*	*		*	114J	
X1				11-7206	<79318>	....RETAINER,INCLINOMETER....		EA		1						114J	13
X1				13623	<79318>	....CARD,REFLECTOR.....		EA		1						114J	14
X1				13620	<79318>	....INCLINOMETER.....		EA		1						114J	15
						ATTACHING PARTS											
P	H		6610-953-2390	11-7213-1	<79318>	....WIRE,DIAL.....		EA		2	*	*	*		*	114J	16
						---*---											
P	H		5340-487-8213	17210-1	<79318>	...SHIM.....		EA		AR	*	*	*		*	114J	17
P	H		5310-595-6070	C64104-2	<80510>	...WASHER,FLAT.....		EA		AR	*	*	*		*	114J	
P	H		5310-487-8215	17210-3	<79318>	...WASHER,FLAT.....		EA		AR	*	*	*		*	114J	
P	H		6610-509-5167	B4-110	<79318>	.SPRING,HELICAL TORSION.....		EA		1	*	*	*		*	114J	18
						RETAINING											
P	H		6610-953-2396	B3-144	<79318>	.ANCHOR ASSEMBLY.....		EA		2	*	*	*		*	114J	
P	H		6610-953-2394	B3-114	<79318>	..ANCHOR,RESTRAINING SPRING..		EA		1	*	*	*		*	114J	19
P	H		3110-691-1357	SS510747	<79318>	..BEARING,BALL,ANNULAR.....		EA		1	*	*	*		*	114J	20
P	H		5340-026-9050	SS359B1	<79318>	.SHIM.....		EA		4	*	*	*		*	114J	21
						ATTACHING PARTS											
			5305-206-0514	AN515-5-5	<88044>	.SCREW,MACHINE.....		HD		2	*	*	*		*	114J	22
			5310-045-4007	MS35338-41	<96906>	.WASHER,LOCK.....		HD		2	*	*	*		*	114J	23
						---*---											
P	H		6610-049-3989	B4-139	<79318>	.DAMPING UNIT.....		EA		1	*	*	*		*	114J	
P	H		6610-953-2397	B4-128	<79318>	.GROUND,COVER.....		EA		1	*	*	*		*	114J	24
						ATTACHING PARTS											
			5305-828-7659	MS35273-12	<96906>	.SCREW,MACHINE.....		EA		4	*	*	*		*	114J	25
			5310-551-7770	MS35337-40	<96906>	.WASHER,LOCK.....		EA		4	*	*	*		*	114J	26
						---*---											
P	H		5305-862-9298	17252	<79318>	.SCREW,MACHINE.....		EA		1	*	*	*		*	114J	27
P	H		5340-864-3488	17253	<02282>	.SPRING,ADJUSTING SCREW.....		EA		1	*	*	*		*	114J	28
P	H		5330-487-8205	SS164	<79318>	.WASHER,NONMETALLIC.....		EA		1	*	*	*		*	114J	29
			5305-145-7676	AN500B4-5	<88044>	.SCREW,MACHINE.....		GR		4	*	*	*		*	114J	30
			5310-551-7770	MS35337-40	<96906>	.WASHER,LOCK.....		EA		4	*	*	*		*	114J	31
P	H		5940-723-3302	4014	<77147>	..TERMINAL,LUG.....		PG		3	*	*	*		*	114J	32
			5935-726-0708	MS3102R10SL3P	<96906>	..CONNECTOR,RECEPTACLE,.....		EA		1	*	*	*		*	114J	33
						ELECTRICAL											
			5310-551-7770	MS35337-40	<96906>	..WASHER,LOCK.....		EA		1	*	*	*		*	114J	34

(1) SOURCE, MAINT AND REC CODE (a) SOURCE CODE	(b) MAINT LEVEL	(c) REC CODE	(2) FEDERAL STOCK NUMBER	(3) DESCRIPTION REFERENCE NUMBER			MODELS USABLE ON CH-34C	(4) UNIT OF ISSUE	(5) QTY INC IN UNIT PACK	(6) QTY INC IN UNIT	(7) 30-DAY DS/GS MAINT ALW (a) 1-20	(b) 21-50	(c) 51-100	(8) 1-YR ALW PER 100 EQUIP CNTGCY	(9) DEPOT MAINT ALW PER 100 EQUIP	(10) ILLUSTRATION (a) FIG NO	(b) ITEM NO
P	H		5310-863-7961	17239	<02282>	..NUT,PIVOT LOCK.....		EA		1	*	*	*		*	114J	35
P	H		6610-373-9438	17240	<79318>	..PIVOT ASSEMBLY.....		EA		1	*	*	*		*	114J	36
P	H		5310-862-4882	SS355C80-30	<79318>	.WASHER.....		EA		1	*	*	*		*	114J	37
P	H		3110-155-9635	R4SSLT0	<70854>	.BEARING,BALL,ANNULAR.....		EA		2	*	*	*		*	114J	38
P	H		3110-953-0245	77R4L1228VP17	<43334>	.BEARING,BALL,ANNULAR.....		EA		2	*	*	*		*	114J	
P	H		3110-198-0129	SIKDD7FS110	<21335>	.BEARING,BALL,ANNULAR.....		EA		2	*	*	*		*	114J	
X1				M5	<79318>	.MOTOR ASSEMBLY,GYRO.....		EA		1						114J	
P	H		6615-487-8208	11-7302	<79318>	..LEAD ASSEMBLY,BRUSH.....		EA		1	*	*	*		*	114J	39
P	H		3120-662-0831	11-7304	<79318>	..BEARING,SLEEVE.....		EA		2	*	*	*		*	114J	40
				ATTACHING PARTS													
			5310-579-1521	AN935-1L	<88044>	..WASHER,LOCK.....		EA		2	*	*	*		*	114J	41
				---*---													
			5305-717-6950	MS51963-9	<96906>	..SETSCREW.....		EA		2	*	*	*		*	114J	42
P	H		6610-536-4974	C62103	<80510>	..PLUG,INDICATOR.....		EA		2	*	*	*		*	114J	43
P	H		6615-166-7054	17358	<79318>	..CLAMP,ELECTRIC LEAD.....		EA		1	*	*	*		*	114J	44
				ATTACHING PARTS													
			5305-145-7676	AN500B4-5	<88044>	..SCREW,MACHINE.....		GR		2	*	*	*		*	114J	45
			5310-551-7770	MS35337-40	<96906>	..WASHER,LOCK.....		EA		2	*	*	*		*	114J	46
				---*---													
P	H		6615-049-3976	C62104X	<80510>	..LEAD ASSEMBLY.....		EA		1	*	*	*		*	114J	47
P	H		6615-953-2384	M5-131	<79318>	..NUT,MOTOR ADJUSTING.....		EA		2	*	*	*		*	114J	48
			5330-585-0871	AN123964	<88044>	..PACKING,PREFORMED.....		EA		2	*	*	*		*	114J	49
P	H		6615-953-2373	1B7336	<79318>	..END,GIMBAL.....		EA		1	*	*	*		*	114J	50
				ATTACHING PARTS													
			5305-145-7676	AN500B4-5	<88044>	..SCREW,MACHINE.....		GR		2	*	*	*		*	114J	51
			5310-551-7770	MS35337-40	<96906>	..WASHER,LOCK.....		EA		2	*	*	*		*	114J	52
				---*---													
P	H		6615-373-9416	M5-125-3	<79318>	..ROTOR ASSEMBLY.....		EA		1	*	*	*		*	114J	53
P	H		6615-443-6964	M5-121	<79318>	...SUPPORT ASSEMBLY,GOVERNOR.		EA		1	*	*	*		*	114J	54
				ATTACHING PARTS													
			5305-273-2187	AN501B1-2	<88044>	...SCREW,MACHINE.....		GR		2	*	*	*		*	114J	55
				---*---													
P	H		3110-155-9634	R4SSLTG	<70854>	..BEARING,BALL,ANNULAR.....		EA		2	*	*	*		*	114J	56
P	H		5310-180-8925	SS359PB6	<79318>	..WASHER,FLAT.....		EA		1	*	*	*		*	114J	
P	H		6615-953-2409	M5-111	<79318>	..STATOR ASSEMBLY.....		EA		1	*	*	*		*	114J	
P	H		5305-862-9301	17244	<02282>	...SCREW,TRIMMER.....		EA		1	*	*	*		*	114J	57
P	H		6615-953-2391	17245	<79318>	...SUPPORT.....		EA		1	*	*	*		*	114J	58
				ATTACHING PARTS													
			5305-145-6917	AN500B2-3	<88044>	...SCREW,MACHINE.....		HD		2	*	*	*		*	114J	59
			5310-515-8000	MS35337-39	<96906>	...WASHER,LOCK.....		HD		2	*	*	*		*	114J	60
				---*---													
			5310-069-4255	MS21044E04	<96906>	...NUT,SELF-LOCKING,HEXAGON..		EA		4	*	*	*		*	114J	61
P	H		5310-487-8207	SS6185-4-9	<79318>	...NUT,SELF-LOCKING,HEXAGON..		EA		2	*	*	*		*	114J	
			5310-720-8392	MS20341-4A	<96906>	...NUT,PLAIN,HEXAGON.....		HD		2	*	*	*		*	114J	62
			5310-551-7770	MS35337-40	<96906>	...WASHER,LOCK.....		EA		2	*	*	*		*	114J	63
P	H		6615-953-2410	M5-119	<79318>	...LEAD ASSEMBLY,GROUND.....		EA		1	*	*	*		*	114J	64
				ATTACHING PARTS													
			5305-579-4828	AN501B1-4	<88044>	...SCREW,MACHINE.....		EA		1	*	*	*		*	114J	65
			5310-579-1521	AN935-1L	<88044>	...WASHER,LOCK.....		EA		1	*	*	*		*	114J	66
				---*---													
P	H		6615-167-2891	M5-120	<79318>	...CONTACT,STATOR GROUND.....		EA		1	*	*	*		*	114J	67
P	H		5307-802-5701	11-7231	<79318>	...STUD,CONTINUOUS THREAD....		EA		2	*	*	*		*	114J	68

(1) SOURCE, MAINT AND REC CODE (a) SOURCE CODE	(b) MAINT LEVEL	(c) REC CODE	(2) FEDERAL STOCK NUMBER	REFERENCE NUMBER	(3) DESCRIPTION	MODELS USABLE ON CH-34C	(4) UNIT OF ISSUE	(5) QTY INC IN UNIT PACK	(6) QTY INC IN UNIT	(7) 30-DAY DS GS MAINT ALW (a) 1-20	(b) 21-50	(c) 51-100	(8) 1-YR ALW PER 100 EQUIP CNTGCY	(9) DEPOT MAINT ALW PER 100 EQUIP	(10) ILLUSTRATION (a) FIG NO	(b) ITEM NO
P	H		6615-953-2412	187309	<79318> ...MAGNET,MOTOR.....		EA		1	*	*	*		*	114J	69
P	H		6615-953-2408	M5-1816	<79318> ...HOUSING,MAGNET.....		EA		1	*	*	*		*	114J	70
P	H		6615-181-5642	M5-128	<79318> ...SUPPORT ASSEMBLY.....		EA		1	*	*	*		*	114J	
					ATTACHING PARTS											
			5305-812-3549	MS35214-5	<96906> ...SCREW,MACHINE.....		HD		2	*	*	*		*	114J	71
					---*---											
P	H		6615-953-2388	M5-127	<79318> ....SUPPORT ASSEMBLY.....		EA		1	*	*	*		*	114J	72
P	H		5940-500-9759	SS100	<79318> ....TERMINAL,LUG.....		EA		1	*	*	*		*	114J	73
P	H		6615-613-5469	11-7334-1	<79318> ....ARM ASSEMBLY,MOTOR BRUSH.		EA		1	*	*	*		*	114J	74
					ATTACHING PARTS											
			5305-144-4066	AN520B1-2	<88044> ....SCREW,MACHINE.....		EA		1	*	*	*		*	114J	75
			5310-579-1521	AN935-1L	<88044> ....WASHER,LOCK.....		EA		1	*	*	*		*	114J	76
P	H		5310-053-9359	SS354B	<79318> ....WASHER.....		EA		1	*	*	*		*	114J	77
					---*---											
P	H		6615-181-5395	M5-123	<79318> ...SUPPORT ASSEMBLY.....		EA		1	*	*	*		*	114J	
					ATTACHING PARTS											
			5305-812-3549	MS35214-5	<96906> ...SCREW,MACHINE.....		HD		2	*	*	*		*	114J	78
					---*---											
P	H		6615-953-2411	M5-129	<79318> ....SUPPORT SUBASSEMBLY.....		EA		1	*	*	*		*	114J	79
P	H		6615-443-6951	M5-134-1	<79318> ....ARM ASSEMBLY,MOTOR BRUSH.		EA		1	*	*	*		*	114J	80
					ATTACHING PARTS											
			5305-144-4066	AN520B1-2	<88044> ....SCREW,MACHINE.....		EA		1	*	*	*		*	114J	81
			5310-579-1521	AN935-1L	<88044> ....WASHER,LOCK.....		EA		1	*	*	*		*	114J	82
P	H		5310-053-9359	SS354B	<79318> ....WASHER.....		EA		1	*	*	*		*	114J	83
					---*---											
P	H		6615-953-2389	11-7324	<79318> ...INSULATION.....		EA		1	*	*	*		*	114J	84
P	H		6680-992-7160	41-7326	<79318> ...GIMBAL.....		EA		1	*	*	*		*	114J	85
			5330-194-3720	AN6230-10	<88044> .PACKING,PREFORMED.....		EA		1	*	*	*		*	114J	86
P	H		1560-603-4199	B3-137	<79318> ..SPRING.....		EA		1	*	*	*		*	114J	87
P	H		6610-953-4944	B3-113	<79318> ..CLAMP.....		EA		1	*	*	*		*	114J	88
					ATTACHING PARTS											
			5305-145-6917	AN500B2-3	<88044> ..SCREW,MACHINE.....		HD		2	*	*	*		*	114J	89
			5310-515-8000	MS35337-39	<96906> ..WASHER,LOCK.....		HD		2	*	*	*		*	114J	90
					---*---											
P	H		6610-953-4945	B3-118	<79318> ..ANCHORAGE ASSEMBLY.....		EA		1	*	*	*		*	114J	
P	H		6610-167-3786	B3-115	<79318> ...ANCHORAGE,ZEROING SCREW...		EA		1	*	*	*		*	114J	91
P	H		5305-207-9958	B3-146	<79318> ...SCREW,MACHINE.....		EA		1	*	*	*		*	114J	92
P	H		5310-373-9408	B3-117	<79318> ..NUT,PLAIN,ROUND.....		EA		1	*	*	*		*	114J	93
P	H		6610-953-2395	B3-139	<79318> ..ARM ASSEMBLY,POINTER.....		EA		1	*	*	*		*	114J	
P	H		6610-953-2386	B3-140	<79318> ...PIVOT.....		EA		1	*	*	*		*	114J	94
					ATTACHING PARTS											
			5305-052-5946	MS35198-4	<96906> ...SCREW,MACHINE.....		HD		1	*	*	*		*	114J	95
					---*---											
P	H		6610-166-7078	B3-141	<79318> ...ARM,SENSITIVITY ADJUSTMENT		EA		1	*	*	*		*	114J	96
P	H		6610-953-2393	B3-112	<79318> ...ARM POINT,ZEROING.....		EA		1	*	*	*		*	114J	97
P	H		5305-207-9958	B3-146	<79318> ...SCREW,MACHINE.....		EA		1	*	*	*		*	114J	98
P	H		6610-176-5438	17259	<79318> ..PIVOT ASSEMBLY,GIMBAL.....		EA		1	*	*	*		*	114J	99
					CONTACT											
P	H		6610-953-2387	B4-140-1	<79318> ..BUMPER.....		EA		2	*	*	*		*	114J	100
P	H		5340-837-9904	B4-140-2	<79318> ..BUSHING,RUBBER.....		EA		AR	*	*	*		*	114J	
P	H		5340-837-9893	B4-140-3	<79318> ..BUSHING,RUBBER.....		EA		AR	*	*	*		*	114J	
P	H		5340-837-9896	B4-140-4	<79318> ..BUSHING,RUBBER.....		EA		AR	*	*	*		*	114J	

(1) SOURCE, MAINT AND REC CODE (a) SOURCE CODE	(b) MAINT LEVEL	(c) REC CODE	(2) FEDERAL STOCK NUMBER	REFERENCE NUMBER	(3) DESCRIPTION	MODELS USABLE ON CH-34C	(4) UNIT OF ISSUE	(5) QTY INC IN UNIT PACK	(6) QTY INC IN UNIT	(7) 30-DAY DS/GS MAINT ALW (a) 1-20	(b) 21-50	(c) 51-100	(8) 1-YR ALW PER 100 EQUIP CNTGCY	(9) DEPOT MAINT ALW PER 100 EQUIP	(10) ILLUSTRATION (a) FIG NO	(b) ITEM NO
P	H		5340-837-9897	B4-140-5 <79318>	..BUSHING,RUBBER.....		EA		AR	*	*	*		*	114J	
P	H		5340-837-9903	B4-140-6 <79318>	..BUSHING,RUBBER.....		EA		AR	*	*	*		*	114J	
P	H		5340-997-6329	B4-140-7 <79318>	..BUSHING,RUBBER.....		EA		AR	*	*	*		*	114J	
P	O	R	6610-963-5783	C2893410007 <89944>	ALTIMETER,PRESSURE SEE..... FIG.114 FOR NHA		EA		1						114L	
P	H		5305-619-4411	61018050208 <89944>	.SCREW,TAPPING,THREAD FORMING		EA		2	*	*	*		*	114L	2
P	H		5355-667-6717	X526 <89944>	.KNOB.....		EA		1	*	*	*		*	114L	3
P	H		5310-275-1745	371-138 <89944>	.NUT,PLAIN,HEXAGON.....		EA		1	*	*	*		*	114L	4
P	H		5305-639-1339	2206-12 <89944>	.SCREW,MACHINE.....		EA		1	*	*	*		*	114L	5
P	H		5305-579-5742	61401060316 <89944>	.SCREW,MACHINE.....		EA		1	*	*	*		*	114L	6
P	H		5305-034-3794	61401060318 <89944>	.SCREW,MACHINE.....		EA		5	*	*	*		*	114L	7
P	H		5305-141-8469	61401060344 <89944>	.SCREW,MACHINE.....		EA		2	*	*	*		*	114L	8
P	H		5310-276-1226	61701020003 <89944>	.WASHER,LOCK.....		EA		7	*	*	*		*	114L	9
				52220600010 <89944>	.PLATE,LOCK,FLANGE.....		EA		1						114L	10
P	H		6610-141-7000	50289300020 <89944>	.FLANGE,MOUNTING,PRESSURE.... ALTIMETER		EA		1	*	*	*		*	114L	11
P	H		5330-530-3516	590BK48 <89944>	.GASKET.....		EA		1	*	*	*		*	114L	12
P	H		6610-530-3068	590BK48-2 <89944>	.GASKET.....		EA		AR	*	*	*		*	114L	
P	H		6610-561-5662	590BK48-3 <89944>	.GASKET.....		EA		AR	*	*	*		*	114L	
			5355-538-6382	MS28105-16 <96906>	.WINDOW,DIAL.....		VX		1	*	*	*		*	114L	13
P	H		5340-487-5671	645K6-2 <89944>	.GASKET,SEALING.....		EA		1	*	*	*		*	114L	14
P	H		5355-857-6220	2206-904-2 <89944>	.POINTER ASSEMBLY.....		EA		1	*	*	*		*	114L	15
				2206-905-2 <89944>	.POINTER ASSEMBLY.....		EA		1						114L	16
P	H		6610-070-1185	84289320101 <89944>	.POINTER AND BALANCE.....		EA		1	*	*	*		*	114L	17
				57289310010 <89944>	.RING,GASKET CENTERING.....		EA		1						114L	18
P	H		6610-070-1184	83289300202 <89944>	.DIAL,SCALE..... ATTACHING PARTS		EA		1	*	*	*		*	114L	19
P	H		5305-297-2173	X30 <89944>	.SCREW,MACHINE..... ---*---		EA		2	*	*	*		*	114L	20
X2	H			2259-17 <89944>	.DISK DIAL SUPPORT.....		EA		1						114L	21
P	H		6605-582-7317	2039-17-1 <89944>	.WASHER.....		EA		1	*	*	*		*	114L	22
P	H		6605-576-3888	2039-17-2 <89944>	.SHIM.....		EA		AR	*	*	*		*	114L	
P	H		6605-582-7316	2039-17-3 <89944>	.SHIM.....		EA		AR	*	*	*		*	114L	
P	H		6605-576-3889	2039-17-4 <89944>	.SHIM.....		EA		AR	*	*	*		*	114L	
P	H		6685-180-9073	371-58 <89944>	.PIN,DIAL,LOCATING.....		EA		2	*	*	*		*	114L	23
X2	H			2259-16 <89944>	.RING,DIAL.....		EA		1						114L	24
				83220645002 <89944>	.DIAL ASSEMBLY,BAROMETRIC....		EA		1						114L	25
				2259-906 <89944>	.GEAR AND PIN ASSEMBLY.....		EA		1						114L	26
X2	H			2259-903 <89944>	.GEAR ASSEMBLY.....		EA		1						114L	27
P	H		5315-181-6314	371S54 <89944>	.PIN,STRAIGHT,HEADLESS.....		EA		1	*	*	*		*	114L	28
				56220640010 <89944>	.RING,RETAINING.....		EA		1						114L	29
				85220640030 <89944>	..GEAR ASSEMBLY,SPUR.....		EA		1						114L	30
P	H		5305-033-6174	371-60B <89944>	..SCREW,SHOULDER.....		EA		3	*	*	*		*	114L	31
P	H		6610-371-0704	371-41 <89944>	...GEAR,ALTIMETER.....		EA		1	*	*	*		*	114L	32
P	H		6685-181-5368	371-909 <89944>	...WHEEL AND HUB ASSEMBLY....		EA		1	*	*	*		*	114L	33
P	H		6685-181-5414	371-908 <89944>	...WHEEL ASSEMBLY,ALTIMETER..		EA		1	*	*	*		*	114L	34

(1) SOURCE, MAINT AND REC CODE (a) SOURCE CODE	(b) MAINT LEVEL	(c) REC CODE	(2) FEDERAL STOCK NUMBER	(3) DESCRIPTION REFERENCE NUMBER			MODELS USABLE ON CH-34C	(4) UNIT OF ISSUE	(5) QTY INC IN UNIT PACK	(6) QTY INC IN UNIT	(7) 30-DAY DS GS MAINT ALW (a) 1 20	(b) 21-50	(c) 51 100	(8) 1-YR ALW PER 100 EQUIP CNTGCY	(9) DEPOT MAINT ALW PER 100 EQUIP	(10) ILLUSTRATION (a) FIG NO	(b) ITEM NO
P	H		6610-821-9031	36037100030	<89944>	...BEARING,HANDSTAFF.....		EA		1	*	*	*		*	114L	35
X2	H			2259-909	<89944>	...PLATE AND BUSHING.....		EA		1						114L	36
P	H		6685-181-5415	371-910	<89944>	..WHEEL ASSEMBLY,ALTIMETER...		EA		1	*	*	*		*	114L	37
P	H		5315-864-5550	371-27	<89944>	...PIN,STRAIGHT,HEADLESS.....		EA		1	*	*	*		*	114L	38
P	H		5315-864-5888	371-98	<89944>	...PIN,STRAIGHT,HEADED.....		EA		1	*	*	*		*	114L	39
P	H		5315-678-1496	2259-7	<89944>	...PIN,STOP LEVER.....		EA		1	*	*	*		*	114L	40
P	H		5310-678-8588	2259-8	<89944>	...WASHER.....		EA		1	*	*	*		*	114L	41
P	H		5340-677-1783	2259-6	<89944>	...LEVER,STOP.....		EA		1	*	*	*		*	114L	42
				1845-25	<89944>	...PIN,STRAIGHT,HEADLESS.....		EA		1						114L	43
				52220640020	<89944>	...PLATE,TOP.....		EA		1						114L	44
P	H		6685-181-5354	371-53	<89944>	.PINION,CENTER.....		EA		1	*	*	*		*	114L	45
P	H		6610-821-9066	46220640010	<89944>	.GASKET.....		EA		1	*	*	*		*	114L	47
P	H		6685-334-6861	371-46	<89944>	.SPRING,RING.....		EA		1	*	*	*		*	114L	48
P	H		5340-598-2203	371S25	<89944>	.RING,RETAINING.....		EA		1	*	*	*		*	114L	49
P	H		5340-282-4971	371-11	<89944>	..RING,RETAINING.....		EA		1	*	*	*		*	114L	50
P	H		5315-537-1301	371-10	<89944>	..PIN,STRAIGHT,HEADLESS.....		EA		1	*	*	*		*	114L	51
P	H		6685-544-8345	2206B2	<89944>	..STEM,ADJUSTMENT KNOB.....		EA		1	*	*	*		*	114L	52
			5330-292-0580	MS28775-006	<96906>	..PACKING,PREFORMED.....		EA		1	*	*	*		*	114L	53
P	H		6930-288-4514	1846-3	<89944>	..GEAR,SPUR.....		EA		1	*	*	*		*	114L	54
P	H		5310-052-1556	45259400110	<89944>	..WASHER,FLAT.....		EA		1	*	*	*		*	114L	55
P	H		6610-019-5515	58259400170	<89944>	..SCREEN,ALTIMETER,PRESSURE..		EA		1	*	*	*		*	114L	56
				50289320010	<89944>	..CASE.....		EA		1						114L	57
P	H		5315-514-1434	371-80	<89944>	.PIN,STRAIGHT,HEADED.....		EA		1	*	*	*		*	114L	58
P	H		5315-525-5808	1839-150	<89944>	.PIN,BEARING.....		EA		1	*	*	*		*	114L	59
P	H		1280-570-9096	940-71	<89944>	.LINK,DIAPHRAGM.....		EA		1	*	*	*		*	114L	60
P	H		5841-675-6493	371-72	<89944>	.ARM,CALIBRATION.....		EA		1	*	*	*		*	114L	61
P	H		6610-570-9091	709-909C	<89944>	.ARM AND BALANCE ASSEMBLY....		EA		1	*	*	*		*	114L	
P	H		5315-514-1434	371-80	<89944>	..PIN,STRAIGHT,HEADED.....		EA		2	*	*	*		*	114L	62
P	H		6685-035-5792	709-6	<89944>	..LINK,BALANCE.....		EA		1	*	*	*		*	114L	63
P	H		5841-675-6493	371-72	<89944>	..ARM,CALIBRATION.....		EA		1	*	*	*		*	114L	64
P	H		6685-304-6925	371P933B	<89944>	..BALANCE.....		EA		1	*	*	*		*	114L	65
P	H		5315-038-0342	671-908	<89944>	.PIN,TAPERED,PLAIN.....		EA		1	*	*	*		*	114L	66
X2	H			61430050006	<89944>	..SETSCREW.....		EA		2						114L	67
P	H		6685-181-9925	671-73D2	<89944>	..HAIRSPRING,ROCKING.....		EA		1	*	*	*		*	114L	68
P	H		5305-217-8147	671-878	<89944>	..SCREW,MACHINE.....		EA		1	*	*	*		*	114L	69
P	H		6610-601-4510	940-129	<89944>	..COUNTERWEIGHT,ALTIMETER....		EA		1	*	*	*		*	114L	70
P	H		6610-070-1182	36037100010	<89944>	..PIVOT,ALTIMETER.....		EA		1	*	*	*		*	114L	71
P	H		6685-181-4214	371-96	<89944>	..JEWEL,SMALL.....		EA		1	*	*	*		*	114L	72
P	H		6610-976-3371	40289320010	<89944>	.DIAPHRAGM ASSEMBLY.....		EA		1	*	*	*		*	114L	74
P	H		5315-597-6665	371-49-1	<89944>	.PIN,TAPERED,PLAIN.....		EA		1	*	*	*		*	114L	75
P	H		6685-304-6931	940-931	<89944>	.BRIDGE ASSEMBLY.....		EA		1	*	*	*		*	114L	
						ATTACHING PARTS											
P	H		5305-537-1302	371-90B	<89944>	.SCREW,EXTERNALLY RELIEVED...		EA		3	*	*	*		*	114L	76
						BODY											
						---*---											
P	H		6685-181-4214	371-96	<89944>	..JEWEL,BODY.....		EA		1	*	*	*		*	114L	77
P	H		6685-180-8551	371-77	<89944>	..HAIRSPRING,MECHANISM.....		EA		1	*	*	*		*	114L	79
P	H		6610-535-1325	940-80	<89944>	..DISK,TRANSMITTER.....		EA		1	*	*	*		*	114L	80
				85289320030	<89944>	..GEAR ASSEMBLY.....		EA		1						114L	
P	H		5310-523-5607	176-71	<89944>	...WASHER,FLAT.....		EA		1	*	*	*		*	114L	81
				35067100010	<89944>	...GEAR,SPUR.....		EA		1						114L	82
X1				371-75	<89944>	...WHEEL.....		EA		1						114L	83

(1) SOURCE, MAINT AND REC CODE (a) SOURCE CODE	(b) MAINT LEVEL	(c) REC CODE	(2) FEDERAL STOCK NUMBER	REFERENCE NUMBER	(3) DESCRIPTION	MODELS USABLE ON CH-34C	(4) UNIT OF ISSUE	(5) QTY INC IN UNIT PACK	(6) QTY INC IN UNIT	(7) 30-DAY DS CS MAINT ALW (a) 1-20	(b) 21-50	(c) 51-100	(8) 1-YR ALW PER 100 EQUIP CNTGCY	(9) DEPOT MAINT ALW PER 100 EQUIP	(10) ILLUSTRATION (a) FIG NO	(b) ITEM NO
P	H		6685-167-0940	371-923	<89944> .SETTING ASSEMBLY,WHEEL JEWEL		EA		2	*	*	*		*	114L	84
P	H		6610-070-1183	35037100010	<89944> .GEARSHAFT,SPUR.....		EA		1	*	*	*		*	114L	85
P	H		5305-684-8911	61401130014	<89944> ..SCREW,MACHINE.....		EA		2	*	*	*		*	114L	86
				61401130620	<89944> ..SCREW,MACHINE.....		EA		1						114L	87
				61401130214	<89944> ..SCREW,MACHINE.....		EA		1						114L	88
				36037100020	<89944> ..SCREW,MACHINE.....		EA		1						114L	89
P	H		6685-181-4214	371-96	<89944> ..JEWEL,SMALL.....		EA		1	*	*	*		*	114L	90
P	H		6660-327-6454	371-95	<89944> ..BEARING,JEWEL.....		EA		1	*	*	*		*	114L	91
P	H		6610-704-3039	671-88	<89944> ..POST,HAIRSPRING.....		EA		1	*	*	*		*	114L	92
X2	H			709-58	<89944> ..BODY,MECHANISM.....		EA		1						114L	93
		R	6620-663-4282	8DJ19GAF6	<24446> INDICATOR,ELECTRICAL..... TACHOMETER SEE FIG.114 FOR NHA		EA		1						114P	
		R	6620-663-4261	8DJ19ACV3	<24446> INDICATOR,ELECTRICAL..... TACHOMETER SEE FIG.114 FOR NHA		EA		1						114P	
P	H		5310-208-3468	4152101P2	<97424> .NUT,SPEED.....		EA		4	*	*	*		*	114P	2
X2	H			4152124P1	<24446> .HOUSING,INDICATOR.....		EA		1						114P	5
X2	H			4149504G33	<24446> .COVER ASSEMBLY.....		EA		1						114P	7
P	H		6620-049-4571	4149562P3	<24446> ..SHELL,INDICATOR.....		EA		1	*	*	*		*	114P	9
P	H		6680-527-9097	4141451P1	<24446> ..GASKET.....		EA		AR	*	*	*		*	114P	10
P	H		6680-527-9099	4141451P2	<24446> ..GASKET.....		EA		AR	*	*	*		*	114P	
P	H		6680-527-9098	4141451P3	<97424> ..GASKET.....		EA		AR	*	*	*		*	114P	
P	H		6680-439-8918	4141772P3	<24446> ..WINDOW.....		EA		1	*	*	*		*	114P	11
P	H		6680-532-2080	4149147P1	<97424> ..GASKET,CENTER FRONT.....		EA		1	*	*	*		*	114P	12
P	H		6620-525-6027	4149560P1	<24446> ..COVER FLANGE,INDICATOR.....		EA		1	*	*	*		*	114P	13
P	H		5355-043-1982	4149770P1	<24454> .POINTER.....NOTE 1		EA		1	*	*	*		*	114P	14
P	H		6680-439-8924	4149770P3	<24446> .POINTER.....NOTE 2		EA		1	*	*	*		*	114P	
P	H		5355-558-1565	4149770P2	<24446> .POINTER,DIAL.....NOTE 1		EA		1	*	*	*		*	114P	15
P	H		5355-668-6388	4149770P4	<24446> .POINTER,DIAL.....NOTE 2		EA		1	*	*	*		*	114P	
P	H		5305-245-0442	4149392P3	<24446> .SCREW,MACHINE.....NOTE 1		EA		2	*	*	*		*	114P	16
P	H		5305-639-5154	4149392P2	<24446> .SCREW,MACHINE.....NOTE 2		EA		2	*	*	*		*	114P	
P	H		6620-552-8338	8948903P1	<97424> .DIAL,SCALE.....NOTE 1		EA		1	*	*	*		*	114P	17
P	H		6680-439-8915	89021006136	<24446> .PLATE,SCALE.....NOTE 2		EA		1	*	*	*		*	114P	
P	H		5340-038-0299	4156540P1	<24446> .CLIP,ELECTRICAL.....NOTE 1		EA		2	*	*	*		*	114P	23
P	H		5935-259-4977	4145811P10	<97424> .CONNECTOR,RECEPTACLE,..... ELECTRICAL NOTE 1		EA		2	*	*	*		*	114P	24
P	H		5935-049-4551	4145811P1	<24446> .CONNECTOR,RECEPTACLE,..... ELECTRICAL NOTE 2		EA		2	*	*	*		*	114P	
P	H		6620-550-4543	NP105390	<97424> .PLATE,IDENTIFICATION.....		EA		1	*	*	*		*	114P	27
			5310-443-1299	MS35650-86	<96906> .NUT,PLAIN,HEXAGON.....		EA		2	*	*	*		*	114P	28
P	H		6620-525-6026	4149506G61	<24446> .PLATE ASSEMBLY.....		EA		1	*	*	*		*	114P	30
P	H		5310-638-1895	G606028	<64959> .WASHER,FLAT.....		EA		2	*	*	*		*	114P	33
P	H		6680-860-3368	414965 4G4	<24446> .MOTOR MAGNET AND ARMATURE... BRIDGE ASSEMBLY NOTE 1		EA		2	*	*	*		*	114P	36
P	H		6680-735-9126	414965 4G2	<24446> .ELEMENT.....NOTE 2		EA		2	*	*	*		*	114P	

(1) SOURCE, MAINT AND REC CODE (a) SOURCE CODE	(b) MAINT LEVEL	(c) REC CODE	(2) FEDERAL STOCK NUMBER	REFERENCE NUMBER	(3) DESCRIPTION	MODELS USABLE ON CH-34C	(4) UNIT OF ISSUE	(5) QTY INC IN UNIT PACK	(6) QTY INC IN UNIT	(7) 30-DAY DS GS MAINT ALW (a) 1-20	(b) 21-50	(c) 51-100	(8) 1-YR ALW PER 100 EQUIP CNTGCY	(9) DEPOT MAINT ALW PER 100 EQUIP	(10) ILLUSTRATION (a) FIG NO	(b) ITEM NO
P	H		6680-736-4068	4149651G2 <24446>	..ARMATURE AND BRIDGE..... ASSEMBLY		EA		1	*	*	*		*	114P	40
P	H		5305-550-0330	4141886P3 <24446>	...SCREW,MACHINE.....NOTE 1		EA		1	*	*	*		*	114P	42
X1				4145839G1 <24446>	...BRIDGE AND JEWEL ASSEMBLY.		EA		1						114P	43
X1				4149406P2 <24446>	...SPACER,BRIDGE.....		EA		3						114P	44
X1				4152097P2 <24446>	...STUD,SUPPORT.....		EA		3						114P	45
X1				4152232G8 <97424>	...DISK AND HUB ASSEMBLY..... NOTE 1		EA		1						114P	46
P	H		6620-166-7230	4152232G2 <24446>	...DISK AND HUB ASSEMBLY..... NOTE 2		EA		1	*	*	*		*	114P	
X1				4152127G1 <24446>	...ARMATURE ASSEMBLY,MOTOR...		EA		1						114P	47
X1				4152093P1 <97424>	....SPRING.....		EA		1						114P	48
X1				4145593G1 <24446>	....GEAR AND SHAFT ASSEMBLY..		EA		1						114P	49
X1				4149399G1 <24446>	...JEWEL ASSEMBLY.....		EA		1						114P	50
P	H		5310-095-7416	4149349P1 <24446>	...NUT,PLAIN,HEXAGON.....		EA		1	*	*	*		*	114P	51
P	H		5305-298-1054	4149355P1 <24446>	...SCREW,MACHINE.....		EA		1	*	*	*		*	114P	52
P	H		5310-095-7238	4136043P117 <97424>	...WASHER,FLAT.....		EA		1	*	*	*		*	114P	53
X1				4152128G1 <24446>	...ARM AND BRIDGE ASSEMBLY...		EA		1						114P	54
P	H		6620-181-4249	4152244P3 <97424>	..COUNTERWEIGHT.....		EA		AR	*	*	*		*	114P	55
P	H		5310-332-6879	4152079P2 <97424>	..NUT,ADJUSTING.....		EA		3	*	*	*		*	114P	56
P	H		6620-860-3367	4149653G4 <24446>	..MOTOR,MAGNET AND ARMATURE..		EA		1	*	*	*		*	114P	57
P	H		5310-443-1580	4149380P1 <24446>	...NUT,PLAIN,HEXAGON.....		EA		1	*	*	*		*	114P	59
P	H		6620-693-7751	4149710G1 <24446>	...MAGNET ASSEMBLY.....		EA		1	*	*	*		*	114P	60
X1				1297794P1 <24446>	....NUT,HEXAGON.....		EA		3						114P	61
X1				4149652G2 <24446>	....MAGNET,UPPER.....		EA		1						114P	62
X1				1297794P1 <24446>	....NUT,HEXAGON.....		EA		2						114P	63
X1				4152030P1 <97424>	....COMPENSATOR,TEMPERATURE..		EA		1						114P	64
X1				1297794P1 <24446>	....NUT,HEXAGON.....		EA		2						114P	65
X1				4149340P1 <24446>	....NUT,PLAIN,HEXAGON.....		EA		3						114P	66
X1				4149652G1 <24446>	....MAGNET,LOWER.....		EA		1						114P	67
P	H		6620-529-9952	4156505P1 <24446>	...SPACER,SLEEVE.....		EA		1	*	*	*		*	114P	68
P	H		5305-297-2949	4149418P1 <24446>	...SCREW,MACHINE.....NOTE 2		EA		3	*	*	*		*	114P	69
P	H		6620-525-6028	4149672P1 <97424>	...SHIELD,AND MOTOR.....		EA		1	*	*	*		*	114P	71
P	H		6680-735-6586	4149166P1 <24446>	...RETAINER,BEARING.....		EA		1	*	*	*		*	114P	73
P	H		3110-791-9847	4152116P1 <24446>	...BEARING,BALL,ANNULAR.....		EA		1	5	13	27		*	114P	74
X1				4152118G1 <24446>	...STATOR FRAME AND COIL..... ASSEMBLY		EA		1						114P	75
P	H		6620-544-3327	5468652G1 <97424>	...ROTOR AND SHAFT ASSEMBLY..		EA		1	*	*	*		*	114P	76
			5340-282-5322	MS16633-12 <96906>	....RING,RETAINING.....NOTE 1		EA		2	*	*	*		*	114P	77
X1				4145566P31 <97424>	....SPRING,CONTROL.....NOTE 1		EA		1						114P	78
X1				9893884P1 <97424>	....CLIP.....NOTE 1		EA		1						114P	79
X1				9883360G5 <24446>	....ROTOR AND BEARING..... ASSEMBLY NOTE 1		EA		1						114P	80
X1				9893886G1 <97424>	....SHAFT AND DISK ASSEMBLY.. NOTE 1		EA		1						114P	81
X1				4141928G3 <24446>	...DISK.....NOTE 2		EA		1						114P	
X1				4136042P58 <24446>	...WASHER.....NOTE 2		EA		1						114P	
X1				4152182G1 <24446>	...ROTOR ASSEMBLY.....NOTE 2		EA		1						114P	
			5310-022-1417	MS15795-602 <96906>	...WASHER,FLAT.....NOTE 2		EA		1	*	*	*		*	114P	
P	H		6680-049-4550	4145633P1 <24446>	...SPRING,DRIVE.....NOTE 2		EA		1	*	*	*		*	114P	
X1				4145840P1 <24446>	...SHAFT,MOTOR.....NOTE 2		EA		1						114P	
P	H		6680-735-6586	4149166P1 <24446>	...RETAINER,BEARING.....		EA		1	*	*	*		*	114P	83

(1) SOURCE, MAINT AND REC CODE (a) SOURCE CODE	(b) MAINT LEVEL	(c) REC CODE	(2) FEDERAL STOCK NUMBER	REFERENCE NUMBER	(3) DESCRIPTION	MODELS USABLE ON CH-34C	(4) UNIT OF ISSUE	(5) QTY INC IN UNIT PACK	(6) QTY INC IN UNIT	(7) 30-DAY DSC'GS MAINT ALW (a) 1-20	(b) 21-50	(c) 51-100	(8) 1-YR ALW PER 100 EQUIP CNTGCY	(9) DEPOT MAINT ALW PER 100 EQUIP	(10) ILLUSTRATION (a) FIG NO	(b) ITEM NO
P	H		3110-791-9847	4152116P1	<24446> ...BEARING,BALL,ANNULAR.....		EA		1	REF	REF	REF		*	114P	84
P	H		6620-512-3282	4149674P1	<24446> ...SHIELD,MOTOR.....		EA		1	*	*	*		*	114P	85
P	H		6680-860-3369	4149534G1	<24446> .SHAFT AND BRIDGE ASSEMBLY... CONCENTRIC NOTE 1		EA		1	*	*	*		*	114P	89
P	H		6680-735-6587	4149534G2	<24446> .SHAFT AND BRIDGE ASSEMBLY,.. CONCENTRIC NOTE 2		EA		1	*	*	*		*	114P	
X1				4141886P2	<24446> ..SCREW.....		EA		3						114P	90
X1				4145839G2	<24446> ..TOP,PLATE.....NOTE 1		EA		1						114P	91
P	H		6620-144-4768	4145839G4	<24446> ..BRIDGE AND JEWEL ASSEMBLY.. NOTE 2		EA		1	*	*	*		*	114P	
X1				4152114G1	<24446> ..GEAR ASSEMBLY.....		EA		1						114P	92
X1				4152112G1	<24446> ..SHAFT AND GEAR ASSEMBLY....		EA		1						114P	93
X1				4149406P1	<24446> ..SPACER,SLEEVE.....		EA		3						114P	94
X1				4149180G1	<24446> ..JEWEL ASSEMBLY,SCREW.....		EA		1						114P	95
X1				4156571P1	<24446> ..NUT,PLAIN,HEXAGON.....		EA		1						114P	96
X1				4149627P3	<24446> ..BRIDGE,LOWER.....		EA		1						114P	97
P	H		5307-329-0480	4152097P1	<24446> ..STUD,SUPPORT.....		EA		3	*	*	*		*	114P	98
P	H		5310-208-5297	4152079P1	<24446> .NUT,PLAIN,HEXAGON.....		EA		3	*	*	*		*	114P	99
P	H		6620-525-6029	4152080P1	<97424> .STUD,ADJUSTING.....		EA		2	*	*	*		*	114P	100
X2	H		6620-523-9437	4149670P1	<24446> .BRIDGE,MOTOR..... NOTE 1 U/O 6620-663-4282 NOTE 2 U/O 6620-663-4261		EA		1	*	*	*		*	114P	101
P	O	R	6680-659-9276	8DJ67FAB1	<97424> INDICATOR,TACHOMETER SEE.... FIG.114 FOR NHA		EA		1	REF	REF	REF	REF	*	114Q	
		R	6620-767-8151	8DJ67FAC1	<97424> INDICATOR,TACHOMETER SEE.... FIG.114 FOR NHA		EA		1						114Q	
P	H		6685-871-3478	NP188175	<97424> .PLATE IDENTIFICATION..NOTE 2		EA		1	*	*	*		*	114Q	1
P	H		6620-936-2369	173382	<97424> .NAMEPLATE,CASE.....NOTE 1		EA		1	*	*	*		*	114Q	
P	H		6680-978-2197	NP173381	<97424> ATTACHING PARTS		EA		1	*	*	*		*	114Q	
P	H		5320-474-8313	9886421P1	<97424> .RIVET,SPLIT.....		EA		1	*	*	*		*	114Q	4
X2	H		6620-031-8505	8905884G45	<97424> .CAN ASSEMBLY,TACHOMETER.....		EA		1	*	*	*		*	114Q	5
P	H		6695-578-5284	8948701G2	<97424> .BEZEL,INSTRUMENT MOUNTING... NOTE 1		EA		1	*	*	*		*	114Q	
P	H		6620-650-4453	8948193P15	<97424> .RING ASSEMBLY.....		EA		1	*	*	*		*	114Q	6
P	H		5355-043-1982	4149770P1	<24454> .POINTER.....NOTE 1		EA		1	*	*	*		*	114Q	7
P	H		6680-439-8924	4149770P3	<24446> .POINTER ASSEMBLY,FRONT..... NOTE 2		EA		1	*	*	*		*	114Q	
P	H		5355-704-7782	4149770P5	<24454> .POINTER ASSEMBLY,REAR.NOTE 1		EA		1	*	*	*		*	114Q	8
P	H		6685-980-0332	4149770P10	<97424> .POINTER ASSEMBLY,REAR.NOTE 2		EA		1	*	*	*		*	114Q	
P	H		6685-979-8939	5463010P1	<24446> .SCALE,PLATE.....NOTE 1		EA		1	*	*	*		*	114Q	9
P	H		6620-963-1040	5463109P1	<97424> .SCALE,PLATE.....NOTE 2 ATTACHING PARTS		EA		1	*	*	*		*	114Q	
P	H		5305-245-0442	4149392P3	<24446> .SCREW,MACHINE..... ---*---		EA		2	*	*	*		*	114Q	10

(1) SOURCE, MAINT AND REC CODE (a) SOURCE CODE	(b) MAINT LEVEL	(c) REC CODE	(2) FEDERAL STOCK NUMBER	REFERENCE NUMBER		(3) DESCRIPTION	MODELS USABLE ON CH-34C	(4) UNIT OF ISSUE	(5) QTY INC IN UNIT PACK	(6) QTY INC IN UNIT	(7) 30-DAY DS GS MAINT ALW (a) 1-20	(b) 21-50	(c) 51-100	(8) 1-YR ALWPER 100 EQUIP CNTGCY	(9) DEPOT MAINT ALWPER 100 EQUIP	(10) ILLUSTRATION (a) FIG NO	(b) ITEM NO
P	H		6680-795-7553	8942884G35	<24454>	.PLATE AND STUD ASSEMBLY.....		EA		1	*	*	*		*	114Q	11
						ATTACHING PARTS											
			5310-443-1299	MS35650-86	<96906>	.NUT,PLAIN,HEXAGON.....		EA		2	*	*	*		*	114Q	12
						---*---											
P	H		6680-983-2516	4149654G5	<97424>	.MOTOR MAGNETIC ASSEMBLY.....		EA		2	*	*	*		*	114Q	14
						ATTACHING PARTS											
P	H		5310-638-1895	G606028	<64959>	.WASHER,FLAT.....		EA		2	*	*	*		*	114Q	19
P	H		6620-525-6029	4152080P1	<97424>	.STUD,ADJUSTING INDICATOR....		EA		2	*	*	*		*	114Q	20
						---*---											
P	H		6620-181-4249	4152244P3	<97424>	..COUNTERWEIGHT.....		EA		AR	*	*	*		*	114Q	21
P	H		6680-983-2521	4149651G4	<24454>	..DISK SPRING AND PLATE.....		EA		1	*	*	*		*	114Q	22
						ASSEMBLY											
						ATTACHING PARTS											
P	H		6680-983-2523	4152079P4	<24454>	..NUT,ADJUSTING.....		EA		3	*	*	*		*	114Q	23
X1				4152232G8	<97424>	...DISK AND HUB ASSEMBLY.....		EA		1						114Q	27
X1				9893530G2	<97424>	...BRIDGE AND JEWEL ASSEMBLY.		EA		1						114Q	28
						ATTACHING PARTS											
X1				4141886P2	<24446>	...SCREW.....		EA		3						114Q	29
						---*---											
X1				4152127G1	<24446>	...ARMATURE ASSEMBLY MOTOR...		EA		1						114Q	30
						ATTACHING PARTS											
X1				4149406P2	<24446>	...SPACER,BRIDGE.....		EA		3						114Q	31
X1				4152097P2	<24446>	...STUD,SUPPORT.....		EA		3						114Q	32
						---*---											
X1				4152093P1	<97424>	....SPRING.....		EA		1						114Q	33
X1				4152129G1	<97424>	....GEAR AND SHAFT ASSEMBLY..		EA		1						114Q	34
X1				4149399G1	<24446>	...JEWEL ASSEMBLY.....		EA		1						114Q	35
P	H		5310-095-7416	4149349P1	<24446>	...NUT,PLAIN,HEXAGON.....		EA		1	*	*	*		*	114Q	36
X1				4152128G9	<24454>	...ARM AND BRIDGE.....		EA		1						114Q	37
P	H		6680-980-0336	4149653G3	<24454>	..MOTOR AND MAGNET ASSEMBLY..		EA		1	*	*	*		*	114Q	38
P	H		6620-708-2688	4149710G2	<97424>	...MAGNET ASSEMBLY.....		EA		1	*	*	*		*	114Q	39
						ATTACHING PARTS											
P	H		5310-443-1580	4149380P1	<24446>	...NUT,PLAIN,HEXAGON.....		EA		1	*	*	*		*	114Q	41
						---*---											
P	H		6680-983-2531	4149652G4	<97424>	....HOLDER ASSEMBLY UPPER....		EA		1	*	*	*		*	114Q	42
						MAGNET											
						ATTACHING PARTS											
X1				1297794P1	<24446>	....NUT,HEXAGON.....		EA		6						114Q	43
						---*---											
X1				4152030P2	<24446>	....COMPENSATOR,TEMPERATURE..		EA		1						114Q	44
						ATTACHING PARTS											
X1				1297794P1	<24446>	....NUT,HEXAGON.....		EA		6						114Q	45
						---*---											
X1				4149652G3	<97424>	....HOLDER ASSEMBLY,LOWER....		EA		1						114Q	46
						MAGNET											
P	H		6680-795-7551	4149672P2	<24454>	...SHIELD UPPER.....		EA		1	*	*	*		*	114Q	47
X1				5468434G2	<24446>	...STATOR FRAME.....		EA		1						114Q	50
P	H		6620-529-9952	4156505P1	<24446>	...SPACER,SLEEVE.....		EA		1	*	*	*		*	114Q	51
P	H		6680-704-2232	5468652G2	<97424>	...ROTOR AND SHAFT ASSEMBLY..		EA		1	*	*	*		*	114Q	52
P	H		6680-979-3778	4145566P31	<97424>	....SPRING,CONTROL.....		EA		1	*	*	*		*	114Q	53
X1				9893884P1	<97424>	....CLIP.....		EA		1						114Q	54
X1				9893360G4	<24446>	....ROTOR AND BEARING.....		EA		1						114Q	55

(1) SOURCE, MAINT AND REC CODE (a) SOURCE CODE	(b) MAINT LEVEL	(c) REC CODE	(2) FEDERAL STOCK NUMBER	REFERENCE NUMBER	(3) DESCRIPTION	MODELS USABLE ON CH-34C	(4) UNIT OF ISSUE	(5) QTY INC IN UNIT PACK	(6) QTY INC IN UNIT	(7) 30-DAY DS/GS MAINT ALW (a) 1-20	(b) 21-50	(c) 51-100	(8) 1-YR ALW PER 100 EQUIP CNTGCY	(9) DEPOT MAINT ALW PER 100 EQUIP	(10) ILLUSTRATION (a) FIG NO	(b) ITEM NO
					CONTINUED										114Q	55
					ATTACHING PARTS											
			5340-282-5322	MS16633-12 <96906>	....RING,RETAINING.....		EA		2	*	*	*		*	114Q	56
					---*---											
X1				9893886G1 <97424>	....SHAFT AND DISK ASSEMBLY..		EA		1						114Q	57
P	H		6680-795-7552	4149674P3 <97424>	...SHIELD.....		EA		1	*	*	*		*	114Q	58
P	H		6680-735-6586	4149166P1 <24446>	...RETAINER,BEARING.....		EA		1	*	*	*		*	114Q	59
P	H		3110-271-0114	4152116P2 <24446>	...BEARING,BALL,ANNULAR.....		EA		1	*	*	*		*	114Q	61
P	H		6680-735-6586	4149166P1 <24446>	...RETAINER,BEARING.....		EA		1	*	*	*		*	114Q	62
P	H		3110-791-9847	4152116P1 <24446>	...BEARING,BALL,ANNULAR.....		EA		1	REF	REF	REF		*	114Q	64
P	H		6680-983-2530	4149534G4 <24454>	.SHAFT ASSEMBLY.....		EA		1	*	*	*		*	114Q	65
P	H		6680-983-2524	4152079P3 <24454>	.NUT,ADJUSTING.....		EA		3	*	*	*		*	114Q	69
					---*---											
X1				9893530G1 <97424>	..BRIDGE ASSEMBLY.....		EA		1						114Q	70
					ATTACHING PARTS											
X1				4141886P2 <24446>	..SCREW.....		EA		3						114Q	71
					---*---											
X1				4152114G1 <24446>	..GEAR ASSEMBLY.....		EA		1						114Q	72
					TACHOMETER											
X1				4152112G1 <24446>	..SHAFT AND GEAR ASSEMBLY....		EA		1						114Q	73
					CENTER											
P	H		6680-980-0339	4149406P6 <97424>	..SPACER.....		EA		3	*	*	*		*	114Q	74
P	H		5307-329-0480	4152097P1 <24446>	..STUD,SUPPORT.....		EA		3	*	*	*		*	114Q	75
X1				4149180G1 <24446>	..JEWEL ASSEMBLY,SCREW.....		EA		1						114Q	76
X1				4156571P1 <24446>	..NUT,PLAIN,HEXAGON.....		EA		1						114Q	77
X1				9893723P3 <24454>	..BRIDGE,LOWER.....		EA		1						114Q	78
					NOTE 1											
					U/O 6680-659-9276											
					NOTE 2											
					U/O 6620-767-8151											
P	O	R	6605-515-6459	18520 <88818>	INDICATOR,HEADING SEE FIG...		EA		1						114R	
					114 FOR NHA											
P	H		5340-597-4471	1604-188 <79555>	.CAP PROTECTIVE DUST AND.....		EA		1	*	*	*		*	114R	1
					MOISTURE SEAL											
P	H		6610-768-9619	118545 <88818>	.COVER ASSEMBLY BACK.....		EA		1	*	*	*		*	114R	
					ATTACHING PARTS											
P	H		5305-579-3399	213801S4-4 <88818>	.SCREW,MACHINE.....		EA		3	*	*	*		*	114R	2
			5310-058-2949	MS35337-78 <96906>	.WASHER,LOCK.....		HD		3	*	*	*		*	114R	3
					---*---											
P	H		6605-329-0817	218530 <88818>	.COVER GEAR.....		EA		1	*	*	*		*	114R	4
					ATTACHING PARTS											
P	H		5305-033-3271	213801S3-4 <88818>	.SCREW.....		EA		3	*	*	*		*	114R	5
			5310-261-7437	AN935-3L <88044>	.WASHER,LOCK.....		HD		3	*	*	*		*	114R	6
					---*---											
P	H		5315-901-5681	218450S3-4 <81100>	.PIN,GROOVED.....		EA		1	*	*	*		*	114R	7
P	H		6605-528-1495	101641 <88818>	.GEAR SPUR.....		EA		1	*	*	*		*	114R	8

(1) SOURCE, MAINT AND REC CODE (a) SOURCE CODE	(b) MAINT LEVEL	(c) REC CODE	(2) FEDERAL STOCK NUMBER	REFERENCE NUMBER	(3) DESCRIPTION	MODELS USABLE ON CH-34C	(4) UNIT OF ISSUE	(5) QTY INC IN UNIT PACK	(6) QTY INC IN UNIT	(7) 30-DAY DS/GS MAINT ALW (a) 1-20	(b) 21-50	(c) 51-100	(8) 1-YR ALW PER 100 EQUIP CNTGCY	(9) DEPOT MAINT ALW PER 100 EQUIP	(10) ILLUSTRATION (a) FIG NO	(b) ITEM NO
P	H		5310-512-5622	101658 <88818>	.WASHER,PLAIN.....		EA		1	*	*	*		*	114R	9
P	H		5355-667-9584	118954 <88818>	.KNOB.....		EA		1	*	*	*		*	114R	10
P	H		5310-527-5856	101627-1 <88818>	.NUT,PLAIN,HEXAGON.....		EA		1	*	*	*		*	114R	11
P	H		5315-901-5681	218450S3-4 <81100>	..PIN,GROOVED.....		EA		1	*	*	*		*	114R	12
P	H		6605-528-8334	115368 <88818>	..GEAR,SPUR.....		EA		1	*	*	*		*	114R	13
X1				118537 <88818>	..SHAFT.....		EA		1						114R	14
P	H		6605-513-5800	118529 <88818>	.PLATE ASSEMBLY.....		EA		1	*	*	*		*	114R	15
					ATTACHING PARTS											
P	H		5305-033-3271	213801S3-4 <88818>	.SCREW.....		EA		2	*	*	*		*	114R	16
			5310-261-7437	AN935-3L <88044>	.WASHER,LOCK.....		HD		2	*	*	*		*	114R	17
					---*---											
P	H		6605-337-5668	318524 <88818>	.RING CLAMP REAR.....		EA		1	*	*	*		*	114R	18
					ATTACHING PARTS											
P	H		5305-537-1399	213800S4-4 <88818>	.SCREW,MACHINE.....		EA		8	*	*	*		*	114R	19
			5310-551-7770	MS35337-40 <96906>	.WASHER,LOCK.....		EA		8	*	*	*		*	114R	20
					---*---											
P	H		6605-321-3722	218543 <88818>	.BEZEL AND BUSHING ASSEMBLY..		EA		1	*	*	*		*	114R	21
P	H		6605-536-5239	218526 <88818>	.CASE ASSEMBLY.....		EA		1	*	*	*		*	114R	22
X2	H			318525 <88818>	.MECHANISM ASSEMBLY SEE.....		EA		1						114R	23
					FIG.114R <SHEET 2 OF 3>											
					FOR BREAKDOWN											
P	H		5355-994-3275	118536 <88818>	..POINTER ASSEMBLY,MECHANISM.		EA		1	*	*	*		*	114R	24
				218533 <88818>	..MASK.....		EA		1						114R	25
					ATTACHING PARTS											
P	H		5305-639-6963	100314 <88818>	..SCREW,MACHINE.....		EA		3	*	*	*		*	114R	26
					---*---											
P	H		6610-519-5036	218538 <88818>	..DIAL SCALE.....		EA		1	*	*	*		*	114R	27
					ATTACHING PARTS											
P	H		5305-639-6963	100314 <88818>	..SCREW,MACHINE.....		EA		4	*	*	*		*	114R	28
					---*---											
P	H		5315-901-5681	218450S3-4 <81100>	..PIN,GROOVED.....		EA		1	*	*	*		*	114R	29
P	H		6605-310-2042	2115351 <88818>	..PISTON ASSEMBLY,INDICATOR..		EA		1	*	*	*		*	114R	30
P	H		6605-398-0578	101867 <88818>	..COUPLING.....		EA		1	*	*	*		*	114R	31
P	H		6605-329-0800	116078 <88818>	..SPRING,HELICAL,COMPRESSION.		EA		1	*	*	*		*	114R	32
P	H		6605-532-2185	116508 <88818>	..WASHER,PLAIN.....		EA		1	*	*	*		*	114R	33
P	H		5977-056-4898	216079 <88818>	..BRUSH ASSEMBLY.....		EA		1	*	*	*		*	114R	34
					ATTACHING PARTS											
P	H		5305-537-1403	213801S2-4 <88818>	..SCREW.....		EA		2	*	*	*		*	114R	35
P	H		5310-209-4907	110401-2SS <88818>	..WASHER,LOCK.....		EA		2	*	*	*		*	114R	36
P	H		5310-297-3339	110400-2SS <88818>	..WASHER,FLAT.....		EA		2	*	*	*		*	114R	37
					---*---											
X1				207154 <88818>	...CAP BRUSH HOLDER.....		EA		1						114R	38
					ATTACHING PARTS											
X1				213801S0-5 <88818>	...SCREW,MACHINE.....		EA		2						114R	39
X1				112288 <88818>	...WASHER.....		EA		2						114R	40
					---*---											
X1				112341 <88818>	...SHIM.....		EA		2						114R	41
X1				108731 <88818>	...BRUSH ELECTRICAL CONTACT..		EA		5						114R	42
X1				111998 <88818>	...HOLDER BRUSH.....		EA		1						114R	43
X1				115234 <88818>	...BRACKET BRUSH HOLDER.....		EA		1						114R	44
P	H		6605-329-0829	318539 <88818>	..CASE CAP AND CRANK ASSEMBLY		EA		1	*	*	*		*	114R	45
					ATTACHING PARTS											

(1) SOURCE, MAINT AND REC CODE (a) SOURCE CODE	(b) MAINT LEVEL	(c) REC CODE	(2) FEDERAL STOCK NUMBER	REFERENCE NUMBER		(3) DESCRIPTION	MODELS USABLE ON CH-34C	(4) UNIT OF ISSUE	(5) QTY INC IN UNIT PACK	(6) QTY INC IN UNIT	(7) 30-DAY DS GS MAINT ALW (a) 1-20	(b) 21-50	(c) 51-100	(8) 1-YR ALW PER 100 EQUIP CNTGCY	(9) DEPOT MAINT ALW PER 100 EQUIP	(10) ILLUSTRATION (a) FIG NO	(b) ITEM NO
P	H		5305-537-1407	213801S6-7	<88818>	..SCREW.....		EA		3	*	*	*		*	114R	46
P	H		5310-660-2891	110401-6SS	<88818>	..WASHER,LOCK.....		EA		3	*	*	*		*	114R	47
						---*---											
X1				105170-1	<88818>	...WASHER,THRUST.....		EA		AR						114R	49
X1				105170-2	<88818>	...WASHER,THRUST.....		EA		AR						114R	
X1				105170-3	<88818>	...WASHER,THRUST.....		EA		AR						114R	
X1				105170-4	<88818>	...WASHER,THRUST.....		EA		AR						114R	
X1				120578-2	<88818>	...CRANK INNER.....		EA		1						114R	50
X1				218451S3-3 1-2	<88818>	...PIN.....		EA		1						114R	51
X1				101828	<88818>	...TUBE.....		EA		1						114R	52
P	H		5990-564-9442	315613	<88818>	..SYNCHRO RECEIVER SEE..... FIG.114R <SHEET 3 OF 3> FOR BREAKDOWN ATTACHING PARTS		EA		1	*	*	*		*	114R	54
				105470	<81100>	..NUT,PLAIN,ROUND.....		EA		3						114R	55
						---*---											
P	H		6605-565-9880	215809	<88818>	..GEAR,SPUR.....		EA		1	*	*	*		*	114R	56
P	H		5310-141-3229	117810	<88818>	..WASHER,SPRING,TENSION.....		EA		1	*	*	*		*	114R	57
				309737	<81100>	..BLOCK ASSEMBLY..... ATTACHING PARTS		EA		1						114R	59
P	H		5310-054-0566	108704	<88818>	..NUT,PLAIN,ROUND.....		EA		3	*	*	*		*	114R	60
						---*---											
P	H		5310-281-6889	105470	<88818>	...NUT,PLAIN,ROUND.....		EA		2	*	*	*		*	114R	61
P	H		5977-322-2840	107880-2	<88818>	...BRUSH HOLDER ASSEMBLY.....		EA		1	*	*	*		*	114R	62
P	H		5977-322-2839	107880-1	<88818>	...BRUSH HOLDER ASSEMBLY.....		EA		1	*	*	*		*	114R	63
P	H		5306-207-8749	107117	<81100>	...BALL,TEE HEAD.....		EA		2	*	*	*		*	114R	64
P	H		6605-342-9858	210588-3	<88818>	...BLOCK,BRUSH.....		EA		1	*	*	*		*	114R	65
P	H		5310-530-9362	102737	<88818>	..WASHER,FLAT.....		EA		3	*	*	*		*	114R	66
P	H		5305-298-4521	107167	<88818>	..SCREW,MACHINE.....		EA		3	*	*	*		*	114R	67
P	H		6605-398-0658	209804	<88818>	..CLAMP AND PLATE ASSEMBLY...		EA		1	*	*	*		*	114R	68
P	H		5970-311-0659	109849	<88818>	..INSULATOR.....		EA		1	*	*	*		*	114R	69
X1				112953	<81100>	..CAP,REAR.....		EA		1						114R	70
				B2-50B1SP6	<88818>	..BEARING,BALL,ANNULAR.....		EA		1						114R	71
P	H		6605-308-2538	207598-2	<88818>	..ROTOR ASSEMBLY.....		EA		1	*	*	*		*	114R	72
P	H		6105-519-1836	207597-6	<88818>	..STATOR,MOTOR.....		EA		1	*	*	*		*	114R	73
P	H		6605-337-5665	309742	<88818>	..CAP,FRONT.....		EA		1	*	*	*		*	114R	74
P	H		5330-286-0389	109745	<88818>	..WASHER,NONMETALLIC.....		EA		1	*	*	*		*	114R	75
P	H		6620-332-1627	109743	<88818>	..RING ASSEMBLY,LOCATING.....		EA		1	*	*	*		*	114R	76
				B2-50B1SP6	<88818>	..BEARING,BALL,ANNULAR.....		EA		1						114R	77
P	H		6620-675-2240	107583	<81100>	..RETAINER.....		EA		1	*	*	*		*	114R	78
		R	6610-190-1414	1636-6AB1	<19315>	INDICATOR,VERTICAL VELOCITY.. SEE FIG.114 FOR NHA		EA		1						114S	
		R	6610-190-1428	1636-6MB2	<19315>	INDICATOR,VERTICAL VELOCITY.. SEE FIG.114 FOR NHA		EA		1						114S	
		R	6610-222-8957	1636-6GB1	<19315>	INDICATOR,VERTICAL VELOCITY.. SEE FIG.114 FOR NHA		EA		1						114S	

(1) SOURCE, MAINT AND REC CODE (a) SOURCE CODE	(b) MAINT LEVEL	(c) REC CODE	(2) FEDERAL STOCK NUMBER	REFERENCE NUMBER	(3) DESCRIPTION	MODELS USABLE ON CH-34C	(4) UNIT OF ISSUE	(5) QTY INC IN UNIT PACK	(6) QTY INC IN UNIT	(7) 30-DAY DS GS MAINT ALW (a) 1-20	(b) 21-50	(c) 51-100	(8) 1-YR ALW PER 100 EQUIP CNTGCY	(9) DEPOT MAINT ALW PER 100 EQUIP	(10) ILLUSTRATION (a) FIG NO	(b) ITEM NO
		R	6610-531-4499	1636-6KB1 <19315>	INDICATOR,VERTICAL VELOCITY.. SEE FIG.114 FOR NHA		EA		1						114S	
		R	6610-663-4138	1636-6HB1 <19315>	INDICATOR,VERTICAL VELOCITY.. SEE FIG.114 FOR NHA		EA		1						114S	
X2	H			PC19163-7 <19315>	.BEZEL ASSEMBLY.....		EA		1						114S	1
			5355-538-6382	MS28105-16 <96906>	..WINDOW,DIAL.....		VX		1	*	*	*		*	114S	3
P	H		5330-821-5706	PC13445-13 <19315>	..WASHER,NONMETALLIC.....		EA		1	*	*	*		*	114S	4
P	H		5305-443-6149	PB8327-1 <19315>	.SCREW,MACHINE.....		EA		2	*	*	*		*	114S	5
P	H		5355-889-7476	PB1106-5 <19315>	.POINTER,DIAL.....NOTE 1 & 3		EA		1	*	*	*		*	114S	6
P	H		5355-519-4906	PB51106-7 <19315>	.POINTER,DIAL.....NOTE 2		EA		1	*	*	*		*	114S	
P	H		6610-166-6884	FI6-6H <19315>	.DIAL,SCALE.....NOTE 3		EA		1	*	*	*		*	114S	7
P	H		6610-056-0532	FI6-6M <19315>	.DIAL.....NOTE 2		EA		1	*	*	*		*	114S	
P	H		6610-651-5661	PB51112-2 <19315>	.SNAP RING,DIAL.....		EA		1	*	*	*		*	114S	8
P	H		5310-487-7519	645-10 <19315>	.WASHER,SPRING TENSION.....		EA		1	*	*	*		*	114S	9
X2	H			PD51039-1 <19315>	.MECHANISM ASSEMBLY SEE..... FIG.114S <SHEET 3 OF 3> FOR BREAKDOWN		EA		1						114S	10
P	H		6610-084-1613	PB22412 <19315>	.SNAP RING ASSEMBLY.....		EA		1	*	*	*		*	114S	11
X2	H			PE51038-1 <19315>	.CASE ASSEMBLY SEE FIG..... 114S <SHEET 2 OF 3> FOR BREAKDOWN		EA		1						114S	13
P	H		5340-095-9633	PB18121 <19315>	.SHIM.....		EA		1	*	*	*		*	114S	14
P	H		6610-167-0924	PB17761 <19315>	.POST,ELECTRICAL.....		EA		1	*	*	*		*	114S	15
P	H		6610-181-4577	PC17760-2 <19315>	.COVER,INDICATOR.....		EA		1	*	*	*		*	114S	16
X2	H			PB17848 <19315>	.PLATE,INSTRUCTION.....		EA		1						114S	18
			4730-240-5905	AN816-4D <88044>	.ADAPTER,STRAIGHT,PIPE TO.,.. TUBE		EA		1	*	*	*		*	114S	19
			4730-969-0605	MS20819-4C <96906>	.SLEEVE,FLARED,TUBE FITTING..		EA		1	*	*	*		*	114S	20
			4730-287-0289	AN818-4D <88044>	.NUT,TUBE,COUPLING.....		EA		1	*	*	*		*	114S	21
P	H		6610-487-7221	PC16533-6 <19315>	..VALVE ASSEMBLY,DIFFUSER....		EA		1	*	*	*		*	114S	25
X1				PB16539 <19315>	...SCREW,ADJUSTING.....		EA		1						114S	27
X1				PB16538 <19315>	...HOLDER,CAPILLARY SCREW....		EA		1						114S	28
X1				PB16537 <19315>	...ELEMENT,VALVE SEAT.....		EA		1						114S	29
P	H		5330-292-0444	PB17704 <19315>	..WASHER,NONMETALLIC.....		EA		1	*	*	*		*	114S	34
P	H		6610-181-5489	PB18965-1 <19315>	..TUBING,AIRSPEED INDICATOR..		EA		1	*	*	*		*	114S	35
P	H		6610-487-7314	PC51076-1 <19315>	..VALVE ASSEMBLY,DAMPING.....		EA		1	*	*	*		*	114S	36
X1				PB16539 <19315>	...SCREW,ADJUSTING.....		EA		1						114S	41
P	H		5330-290-7953	PB17705 <19315>	..WASHER,NONMETALLIC.....		EA		1	*	*	*		*	114S	44
P	H		5310-190-2907	PB19091 <19315>	..WASHER,FLAT.....		EA		1	*	*	*		*	114S	45
P	H		5340-229-3947	PB18960 <19315>	..SPRING.....		EA		1	*	*	*		*	114S	46
P	H		6610-095-9944	PB22639 <19315>	..SHAFT ASSEMBLY,ADJUSTING...		EA		1	*	*	*		*	114S	47
X1				PB51609-1 <19315>	...RING,RETAINING.....		EA		1						114S	51
P	H		5315-095-9664	PB19169 <19315>	..PIN,STRAIGHT,HEADLESS.....		EA		2	*	*	*		*	114S	52
P	H		5305-487-7087	PB51253-1 <19315>	..SCREW,CLAMPING.....		EA		1	*	*	*		*	114S	55
P	H		5305-014-2070	PB53539-1 <19315>	..SCREW,MACHINE.....		EA		3	*	*	*		*	114S	56
P	H		6610-167-0924	PB17761 <19315>	..POST,ELECTRICAL.....		EA		2	*	*	*		*	114S	57
P	H		6610-181-7544	PC17630 <19315>	..CONTAINER ASSEMBLY.....		EA		1	*	*	*		*	114S	58
P	H		6610-144-4406	PD50585-2 <19315>	..CASE ASSEMBLY,RATE OF CLIMB		EA		AR	*	*	*		*	114S	66
P	H		5330-487-6433	PB17618 <19315>	..WASHER,LEATHER.....		EA		1	*	*	*		*	114S	68
P	H		6610-095-9628	PB17707 <19315>	..GASKET.....		EA		1	*	*	*		*	114S	69
P	H		6610-095-9931	PB22314 <19315>	..ARM,BALANCE.....		EA		1	*	*	*		*	114S	70
P	H		6610-166-6790	PB766 <19315>	..CAP,STONE SAPPHIRE.....		EA		1	*	*	*		*	114S	71

(1) SOURCE, MAINT AND REC CODE (a) SOURCE CODE	(b) MAINT LEVEL	(c) REC CODE	(2) FEDERAL STOCK NUMBER	REFERENCE NUMBER	(3) DESCRIPTION	MODELS USABLE ON CH-34C	(4) UNIT OF ISSUE	(5) QTY INC IN UNIT PACK	(6) QTY INC IN UNIT	(7) 30-DAY DS GS MAINT ALWPER 100 EQUIP CNTGCY (a) 1-20	(b) 21-50	(c) 51-100	(8) 1-YR ALWPER 100 EQUIP CNTGCY	(9) DEPOT MAINT ALWPER 100 EQUIP	(10) ILLUSTRATION (a) FIG NO	(b) ITEM NO
P	H		6610-487-6408	PB15591	<19315> ..BEARING,JEWEL.....		EA		1	*	*	*		*	114S	72
P	H		6610-180-8895	PB15072	<19315> ..JEWEL AND BUSHING ASSEMBLY.		EA		1	*	*	2		*	114S	73
X1				PB15071	<19315> ...BUSHING,SLEEVE.....		EA		1						114S	74
X1				PB8784	<19315> ...JEWEL,PIVOT.....		EA		1						114S	75
P	H		6610-181-4584	PB22313	<19315> ..STAFF,PINION.....		EA		1	*	*	*		*	114S	76
P	H		6610-181-4580	PB22315	<19315> ..HANDSTAFF.....		EA		1	*	*	*		*	114S	77
P	H		5310-096-0374	PB51085-1	<19315> ..WASHER,CONCAVE.....		EA		1	*	*	*		*	114S	79
P	H		6610-096-0373	PB51078-1	<19315> ..MOUNTING,BRACKET.....		EA		1	*	*	*		*	114S	80
P	H		6610-697-5785	PC51040-1	<19315> ..DIAPHRAGM ASSEMBLY.....		EA		1	*	*	*		*	114S	82
P	H		6610-096-0525	PB9032	<19315> ..SPRING,RATE OF CLIMB.....		EA		2	*	*	*		*	114S	83
P	H		6610-523-4653	PB3265	<19315> ..PIN,LINK.....		EA		2	*	*	*		*	114S	84
P	H		6610-176-5373	PC16834-22	<19315> ..LINK.....		EA		1	*	*	*		*	114S	85
P	H		6610-510-2906	PB19152	<19315> ..YOKE,ADJUSTING LINK.....		EA		1	*	*	*		*	114S	86
P	H		6610-167-2849	PB22403	<19315> ..SHAFT ASSEMBLY,ROCKING.....		EA		1	*	*	*		*	114S	89
X1				PB8784	<19315> ...JEWEL,PIVOT.....		EA		1						114S	91
X1				PB12017	<19315> ...HAIRSPRING,ACCELEROMETER..		EA		1						114S	92
P	H		6610-084-1611	PB10877	<19315> ..ARM,SHORT LEVER.....		EA		1	*	*	*		*	114S	93
P	H		6610-181-6248	PB18358-2	<19315> ..WEIGHT ASSEMBLY.....		EA		1	*	*	*		*	114S	94
P	H		5305-487-7178	PB6407	<19315> ..SCREW.....		EA		1	*	*	*		*	114S	99
P	H		6610-167-2863	PB3567	<19315> ..PIVOT,ROCKING SHAFT.....		EA		1	*	*	*		*	114S	100
P	H		6610-095-9655	PB18962	<19315> ..STOP ASSEMBLY.....		EA		1	*	*	*		*	114S	101
P	H		5310-050-2254	502254	<80510> ..WASHER,FLAT.....		LB		2	*	*	*		*	114S	102
P	H		6610-525-0091	PB51484-1	<19315> ..SPRING,LOCKING.....		EA		1	*	*	*		*	114S	105
P	H		6610-176-5471	PB19092	<19315> ..BUSHING AND ROD ASSEMBLY...		EA		1	*	*	*		*	114S	107
P	H		6610-180-8601	PB22305	<19315> ..LEVER ASSEMBLY,DRIVER.....		EA		1	*	*	*		*	114S	108
P	H		6610-180-8542	PB22309	<19315> ..LEVER ASSEMBLY,FOLLOWER....		EA		1	*	*	*		*	114S	109
P	H		6605-180-8893	PB22421	<19315> ..JEWEL,PIVOT.....		EA		3	*	*	*		*	114S	110
P	H		5305-638-2373	0-12	<19315> ..SCREW,MACHINE.....		EA		3	*	*	*		*	114S	111
P	H		6610-095-9938	PB22418-1	<19315> ..BRIDGE ASSEMBLY.....		EA		1	*	*	*		*	114S	112
P	H		5305-638-2373	0-12	<19315> ...SCREW,MACHINE.....		EA		2	*	*	*		*	114S	113
P	H		6615-443-6059	PB52959-2	<19315> ..SHAFT WASHER ASSEMBLY.....		EA		1	*	*	*		*	114S	114
P	H		5310-096-0440	PB52937-1	<19315> ...WASHER,RECESSED.....		EA		1	*	*	*		*	114S	115
P	H		5315-181-6346	0-14	<19315> ..PIN,TAPER.....		EA		1	*	*	*		*	114S	116
					NOTE 1 U/O 6610-190-1414 NOTE 2 U/O 6610-190-1428 NOTE 3 U/O 6610-663-4138											
		R	6610-530-0028	RC60	<98810> INDICATOR,VERTICAL VELOCITY.. SEE FIG.113 AND FIG.114 FOR NHA		EA		1						114T	
P	O	R	6610-551-0673	RC60MS	<98810> INDICATOR,VERTICAL VELOCITY.. SEE FIG.113 AND 114 FOR NHA		EA		1						114T	
P	H		6695-526-8024	M2040	<98810> .BEZEL,INSTRUMENT MOUNTING...		EA		1	*	*	*		*	114T	1

(1) SOURCE, MAINT AND REC CODE (a) SOURCE CODE	(b) MAINT LEVEL	(c) REC CODE	(2) FEDERAL STOCK NUMBER	(3) DESCRIPTION REFERENCE NUMBER			MODELS USABLE ON CH-34C	(4) UNIT OF ISSUE	(5) QTY INC IN UNIT PACK	(6) QTY INC IN UNIT	(7) 30-DAY DS/GS MAINT ALW (a) 1-20	(b) 21-50	(c) 51-100	(8) 1-YR ALW PER 100 EQUIP CNTGCY	(9) DEPOT MAINT ALW PER 100 EQUIP	(10) ILLUSTRATION (a) FIG NO	(b) ITEM NO
P	H		6685-526-6199	P1290	<98810>	.GASKET.....		EA		AR	*	*	*		*	114T	5
			5355-538-6384	MS28105-17	<96906>	.WINDOW,DIAL.....		EA		1	*	*	*		*	114T	6
P	H		6685-526-6197	P2046	<98810>	.GASKET,RUBBER.....		EA		1	*	*	*		*	114T	7
P	H		6610-506-0076	M2045	<98810>	.RING,GASKET.....		EA		1	*	*	*		*	114T	8
P	H		5355-518-1904	P1120	<98810>	.POINTER,DIAL.....		EA		1	*	*	*		*	114T	9
P	H		6610-519-5220	P2028	<98810>	.DIAL,SCALE.....NOTE 1		EA		1	*	*	2		*	114T	10
X2	H			P2128	<98810>	.DIAL.....NOTE 2		EA		1						114T	
						ATTACHING PARTS											
P	H		5305-527-5850	P1151	<98810>	.SCREW,MACHINE.....		EA		2	*	*	*		*	114T	11
						---*---											
X2	H			A3092	<98810>	.MECHANISM ASSEMBLY SEE.....		EA		1						114T	12
						FIG.114T <SHEET 2 OF 2>											
						FOR BREAKDOWN											
P	H		6610-520-1829	M1058	<98810>	.RING,SPLIT.....		EA		1	*	*	*		*	114T	13
P	H		5340-664-5564	M1075	<98810>	.RING,RETAINING.....		EA		1	*	*	*		*	114T	14
P	H		5340-664-5563	P1039	<98810>	.RING,RETAINING.....		EA		1	*	*	*		*	114T	15
P	H		5315-514-1050	M1073	<98810>	.PIN,STRAIGHT,HEADLESS.....		EA		1	*	*	*		*	114T	16
P	H		6610-520-1831	M1072	<98810>	.STEM,ZERO ADJUSTING.....		EA		1	*	*	*		*	114T	17
P	H		6610-699-0719	M1070	<98810>	.GEAR,SPUR.....		EA		1	*	*	*		*	114T	18
P	H		6685-506-0079	P1041	<98810>	.SPRING,HELICAL,COMPRESSION..		EA		1	*	*	*		*	114T	19
P	H		5330-641-5245	P1074	<98810>	.WASHER,NONMETALLIC.....		EA		1	*	*	*		*	114T	20
P	H		6610-832-3037	P1067	<98810>	.TUBE,CONNECTOR,INDICATOR....		EA		1	*	*	*		*	114T	21
P	H		6610-019-5468	A1908-2	<98810>	.ADAPTER ASSEMBLY.....NOTE 1		EA		1	*	*	*		*	114T	22
X2	H		6610-074-2092	A1908-1	<98610>	.ADAPTER ASSEMBLY.....NOTE 2		EA		1	*	*	*		*	114T	
P	H		5305-367-6225	A1352	<98810>	..SCREW.....		EA		1	*	*	*		*	114T	23
			5330-292-0580	MS28775-006	<96906>	.PACKING,PREFORMED.....		EA		1	*	*	*		*	114T	25
			5330-350-9013	MS29513-112	<96906>	.PACKING,PREFORMED.....		EA		1	*	*	*		*	114T	26
X2	H			M3093	<98810>	.HOUSING,INDICATOR.....NOTE 1		EA		1						114T	27
X2	H			M31073	<98810>	.CASE,INDICATOR.....NOTE 2		EA		1						114T	
P	H		6685-506-0081	P1191	<98810>	..PIN,BEARING.....		EA		1	*	*	*		*	114T	28
P	H		6610-860-4222	M1365	<98810>	..BRACKET,DIAPHRAGM.....		EA		1	*	*	*		*	114T	29
P	H		6610-511-3320	A2125	<98810>	..DIAPHRAGM ASSEMBLY,.....		EA		1	*	*	*		*	114T	31
						INDICTOR											
						ATTACHING PARTS											
P	H		6610-019-5471	M1791	<98810>	..SPACER.....		EA		1	*	*	*		*	114T	33
						---*---											
P	H		6610-567-5062	M1749	<98810>	...GASKET.....		EA		1	*	*	*		*	114T	35
P	H		6610-511-3322	M1363	<98810>	..PLATE,RETAINING.....		EA		1	*	*	*		*	114T	37
P	H		5310-858-7707	P1364	<98810>	..WASHER,TENSION.....		EA		1	*	*	*		*	114T	39
P	H		6610-019-5467	SA1096	<98810>	..GEAR ASSEMBLY.....		EA		1	*	*	*		*	114T	40
P	H		6610-525-6022	M1006	<98810>	..STOP,OVER-PRESSURE.....		EA		1	*	*	*		*	114T	41
P	H		6610-734-3603	A1038	<98810>	..BLOCK,RATE OF CLIMB.....		EA		1	*	*	*		*	114T	43
P	H		6610-448-6414	S1010	<98810>	...BAR,RETARD.....		EA		2	*	*	*		*	114T	47
P	H		6610-621-5855	S1008	<98810>	...SPACER,PLATE.....		EA		3	*	*	*		*	114T	49
P	H		6610-511-3321	M1007	<98810>	...BLOCK,RETARD.....		EA		1	*	*	*		*	114T	50
P	H		6610-766-6944	SA1367	<98810>	..BIMETAL AND LINK ASSEMBLY..		EA		1	*	*	*		*	114T	51
X1				M1255	<98810>	...PIN.....		EA		1						114T	53
X1				M1368	<98810>	...LINK.....		EA		1						114T	54
X1				SA1370	<98810>	...BI-METAL ASSEMBLY.....		EA		1						114T	55
X2	H			A3094	<98810>	..FRAME ASSEMBLY.....		EA		1						114T	
P	H		6610-511-3315	A1086	<98810>	...BUSHING ASSEMBLY,PIVOT....		EA		1	*	*	*		*	114T	55
P	H		6610-766-6938	A2111	<98810>	..SHAFT ASSEMBLY,ROCKING.....		EA		1	*	*	*		*	114T	58

(1) SOURCE, MAINT AND REC CODE (a) SOURCE CODE	(b) MAINT CODE	(c) REC CODE	(2) FEDERAL STOCK NUMBER	REFERENCE NUMBER	(3) DESCRIPTION	MODELS USABLE ON CH-34C	(4) UNIT OF ISSUE	(5) QTY INC IN UNIT PACK	(6) QTY INC IN UNIT	(7) 30-DAY DS GS MAINT ALW (a) 1-20	(b) 21-50	(c) 51-100	(8) 1-YR ALW PER 100 EQUIP CNTGCY	(9) DEPOT MAINT ALW PER 100 EQUIP	(10) ILLUSTRATION (a) FIG NO	(b) ITEM NO
X1				P1012	<98810> ...SPRING,HAIR.....		EA		1						114T	60
X1				M1726	<98810> ...ARM,ADJUSTING.....		EA		1						114T	61
X1				M1359	<98810> ...WEIGHT.....		EA		1						114T	63
P	H		6610-766-6943	SA1002	<98810> ...SHAFT ASSEMBLY,ROCKING....		EA		1	*	*	*		*	114T	65
X1				M1082	<98810> ....WEIGHT.....		EA		1						114T	66
X1				M1001	<98810> ....GEAR,SECTOR.....		EA		1						114T	68
X2	H			SA1357	<98810> ...ROCKING SHAFT SUBASSEMBLY.		EA		1						114T	69
P	H		6685-506-0080	P1058	<98810> ....PIVOT,SHAFT.....		EA		1	*	*	*		*	114T	70
P	H		6610-511-3316	A1089	<98810> ...JEWEL ASSEMBLY,ECCENTRIC..		EA		1	*	*	*		*	114T	71
P	H		6610-511-3314	A1084	<98810> ...BUSHING ASSEMBLY,PINION...		EA		1	*	*	*		*	114T	72
					ATTACHING PARTS											
P	H		6610-888-3191	M1310	<98810> ...PINION,HANDSTAFF.....		EA		1	*	*	*		*	114T	74
P	H		6685-506-0090	P2006	<98810> ...JEWEL,MOUNTED.....		EA		1	*	*	*		*	114T	75
P	H		6610-621-5825	A1093	<98810> ...STOP ASSEMBLY,SECTOR GEAR.		EA		2	*	*	*		*	114T	76
P	H		5315-511-3324	P1083	<98810> ...PIN,LOCATING.....		EA		1	*	*	*		*	114T	77
X2	H			M4000	<98810> ...FRAME.....		EA		1						114T	78
					NOTE 1											
					U/O 6610-530-0028											
					NOTE 2											
					U/O 6610-551-0673											
				S1650-61003	<78286> FURNISHINGS INSTALLATION.....										115	
					SEE FIG.40 FOR NHA											
				S1650-62174	<78286> .HOLDER INSTALLATION,PILOTS..				1						115	
					CHECK LIST											
MF	O			S14-50-2194	<78286> ..CHAIN ASSEMBLY.....		EA		1						115	1
					MAKEFR											
					AR 5340-633-5974 CHAIN											
					ATTACHING PARTS											
			5305-840-6694	MS24621-29	<96906> ..SCREW,TAPPING,THREAD.....		HD		1	*	*	*		*	115	2
					FORMING											
					---*---											
P	O		1680-570-4852	S14-50-2195	<78286> ..ENVELOPE ASSEMBLY,CHECK....		EA		1	*	2	2		*	115	3
					LIST											
X2	F			S14-50-2193	<78286> ..STRAP ASSEMBLY.....		EA		1						115	5
P	F		5325-174-2923	AN227-8	<88044> ..STUD,SNAP FASTENER.....		EA		1	*	*	*		*	115	6
			5325-290-5933	AN227-889B	<88044> ..FASTENER,SNAP.....		EA		1	*	*	*		*	115	
				S1650-62126-1	<78286> .ASH TRAY INSTALLATION,PILOTS				1						115	7
				S1650-62126-2	<78286> .ASH TRAY INSTALLATION,.....				1						115	
					CO-PILOTS											
			1680-658-2963	S1650-61187	<78286> ..RECEPTACLE ASSEMBLY,ASH....										115	
					RPL-BY 1680-730-7627											
P	O		1680-730-7627	S1650-61187-2	<78286> ..RECEPTACLE ASSEMBLY,ASH....		EA		1	*	2	2		*	115	8
					RPLS-- 1680-658-2963											
					ATTACHING PARTS											
			5305-984-6194	MS35206-246	<96906> ..SCREW,MACHINE.....		HD		2	*	*	*		*	115	9
			5310-184-8966	AN960PD8	<88044> ..WASHER,FLAT.....		HD		2	*	*	*		*	115	

(1) SOURCE, MAINT AND REC CODE (a) SOURCE CODE	(b) MAINT LEVEL	(c) REC CODE	(2) FEDERAL STOCK NUMBER	REFERENCE NUMBER		(3) DESCRIPTION	MODELS USABLE ON CH-34C	(4) UNIT OF ISSUE	(5) QTY INC IN UNIT PACK	(6) QTY INC IN UNIT	(7) 30-DAY DS GS MAINT ALW (a) 1-20	(b) 21-50	(c) 51-100	(8) 1-YR ALW PER 100 EQUIP CNTGCY	(9) DEPOT MAINT ALW PER 100 EQUIP	(10) ILLUSTRATION (a) FIG NO	(b) ITEM NO
			5310-811-3494	MS21044N08	<96906>	..NUT,SELF-LOCKING,HEXAGON...		EA		2	*	*	*		*	115	
						---*---											
P	O		1680-632-4437	32C640	<72882>	..RECEPTACLE,ASH.....		EA		1	*	*	2		*	115	
			5305-984-6194	MS35206-246	<96906>	...SCREW,MACHINE.....		HD		1	*	*	*		*	115	11
			5310-685-3744	AN960C8	<88044>	...WASHER,FLAT.....		HD		1	*	*	*		*	115	
			5310-811-3494	MS21044N08	<96906>	...NUT,SELF-LOCKING,HEXAGON..		EA		1	*	*	*		*	115	
X2	O			S1650-62126-3	<78286>	..BRACKET ASSEMBLY.....		EA		1						115	12
						ATTACHING PARTS											
			5310-184-8966	AN960PD8	<88044>	..WASHER,FLAT.....		HD		1	*	*	*		*	115	
			5310-811-3494	MS21044N08	<96906>	..NUT,SELF-LOCKING,HEXAGON...		EA		1	*	*	*		*	115	
						---*---											
X2	F			S1650-62126-4	<78286>	..BRACKET ASSEMBLY.....		EA		1						115	16
						ATTACHING PARTS											
			5310-184-8966	AN960PD8	<88044>	..WASHER,FLAT.....		HD		1	*	*	*		*	115	
			5310-811-3494	MS21044N08	<96906>	..NUT,SELF-LOCKING,HEXAGON...		EA		1	*	*	*		*	115	
						---*---											
				S1650-62103	<78286>	.TUBE INSTALLATION,RELIEF....				1						115	
			1680-485-2955	42A6504	<80049>	..HORN,RELIEF TUBE RPL-BY...										115	
						1680-703-3359											
			1680-485-2834	H6563A	<80049>	..HORN,RELIEF TUBE RPL-BY...										115	
						1680-703-3359											
P	O		1680-703-3359	AN8018-1	<88044>	..HORN,RELIEF TUBE.....		EA		1	2	2	3		*	115	20
						RPLS-- 1680-485-2834,											
						1680-485-2955											
P	F		1560-565-8498	S1650-62103-7	<78286>	..BRACKET,RELIEF TUBE.....		EA		1	2	2	3		*	115	21
						ATTACHING PARTS											
			5305-144-3928	AN526-632R32	<88044>	..SCREW,MACHINE.....		HD		2	*	*	*		*	115	22
						---*---											
P	F		1560-673-2051	S1650-62103-1	<78286>	..BRACKET.....		EA		1	*	*	*		*	115	23
						ATTACHING PARTS											
				MS20470AD4	<96906>	..RIVET.....		EA		2						115	24
						---*---											
P	O		1560-766-3477	S1650-62103-6	<78286>	..TUBE,RELIEF.....		EA		1	3	7	14		*	115	25
MF	F			S14-50-3026	<78286>	..GUIDE.....		EA		1						115	26
						MAKEFR											
						9535-554-1416 AL ALLY SH											
						ATTACHING PARTS											
				MS20470AD4	<96906>	..RIVET.....		EA		2						115	27
						---*---											
				S1650-62103-3	<78286>	..TUBE ASSEMBLY.....		EA		1						115	28
						ATTACHING PARTS											
				MS20470AD4	<96906>	..RIVET.....		EA		5						115	29
						---*---											
MO	O			S1650-62103-4	<78286>	...TUBE RELIEF.....		EA		1						115	30
						MAKEFR											
						AR 4710-297-0901 AL ALLY SH											
X1				S1650-62103-5	<78286>	...PLATE.....		EA		1						115	31
P	F		1680-485-2934	41A9177	<98750>	..VENTURI,PILOTS RELIEF TUBE.		EA		1	*	2	2		*	115	32
						ATTACHING PARTS											
			5305-180-0012	AN525-10R10	<88044>	..SCREW,MACHINE.....		HD		2	*	*	*		*	115	33
						---*---											
			1680-605-3412	MS220251	<96906>	..BRACKET,FLYERS RELIEF TUBE.		EA		1	*	*	2		*	115	

(1) SOURCE, MAINT AND REC CODE (a) SOURCE CODE	(b) MAINT LEVEL	(c) REC CODE	(2) FEDERAL STOCK NUMBER	REFERENCE NUMBER		(3) DESCRIPTION	MODELS USABLE ON CH-34C	(4) UNIT OF ISSUE	(5) QTY INC IN UNIT PACK	(6) QTY INC IN UNIT	(7) 30-DAY DS GS MAINT ALW (a) 1-20	(b) 21-50	(c) 51-100	(8) 1-YR ALWPER 100 EQUIP CNTGCY	(9) DEPOT MAINT ALWPER 100 EQUIP	(10) ILLUSTRATION (a) FIG NO	(b) ITEM NO
P	O		1680-516-6543	54H19651	<80049>	.BELT,AIRCRAFT SAFETY,LAP.... RPLS-- 1680-302-8836, 1680-534-7032 1680-554-1675, 1680-632-1097,& 1680-765-5495		EA		1	*	*	*		*	115	34
P	O		1680-872-1113	6284407	<07878>	.SPRING,SEAT BELT..... ATTACHING PARTS		EA		2	2	6	11	134	*	115	
			5305-167-3635	AN525-416-12	<88044>	.SCREW,MACHINE.....				4	*	*	*		*	115	35
			5310-183-4406	AN960PD10	<88044>	.WASHER,FLAT.....		HD		8	*	*	*		*	115	
			5310-877-5796	MS21044N4	<96906>	.NUT,SELF-LOCKING,HEXAGON....		EA		4	*	*	*		*	115	
						---*---											
P	O		1680-485-3047	50D3770	<80049>	.HARNESS,AIRCRAFT SAFETY,.... SHOULDER RPLS-- 1680-166-4681, 1680-967-1759 ATTACHING PARTS		EA		2	*	*	*		*	115	36
			5306-182-1958	AN4H10A	<88044>	.BOLT,MACHINE.....		HD		4	*	*	*		*	115	37
			5310-183-4406	AN960PD10	<88044>	.WASHER,FLAT.....		HD		8	*	*	*		*	115	
			5310-877-5796	MS21044N4	<96906>	.NUT,SELF-LOCKING,HEXAGON....		EA		4	*	*	*		*	115	
						---*---											
MF	F			S14-50-2169	<78286>	.FITTING,FURNISHING..... MAKEFR AR 9535-554-1416 AL ALLY SH ATTACHING PARTS		EA		2						115	38
			5306-182-2059	AN3H6A	<88044>	.BOLT,MACHINE.....		HD		2	*	*	*		*	115	
			5310-183-4406	AN960PD10	<88044>	.WASHER,FLAT.....		HD		4	*	*	*		*	115	
			5310-877-5797	MS21044N3	<96906>	.NUT,SELF-LOCKING,HEXAGON....		EA		2	*	*	*		*	115	
						---*---											
P	O		1680-536-8105	S1650-61474	<78286>	.CUSHION ASSEMBLY,BACK..... OBSLTS 1680-780-0896		EA		2	2	5	10		*	115	39
P	O		1680-780-0897	S1650-61443	<78286>	.CUSHION ASSEMBLY RPLS--.... 1680-536-8098		EA		2	2	3	7		*	115	40
				S1650-61159	<78286>	.CUSHION EXTENSION..... INSTALLATION,PILOTS AND CO-PILOTS SEATBACK				1						115	
				S1650-61159-2	<78286>	..CUSHION EXTENSION..... INSTALLATION,CO-PILOT SEAT				1						115	
				S1650-61159-1	<78286>	..CUSHION EXTENSION..... INSTALLATION,PILOT SEAT				1						115	
P	O		1680-626-7355	S1650-61170	<78286>	...CUSHION EXTENSION ASSEMBLY		EA		1	*	2	2		*	115	41
				S1650-61100-2	<78286>	.PILOTS AND CO-PILOTS SEAT... INSTALLATION SEE FIG.116 FOR BREAKDOWN				1						115	43
				S1650-62148-2	<78286>	.NAMEPLATE INSTALLATION.....				1						115	44
				S1650-62356	<78286>	.KIT INSTALLATION,FIRST AID..				1						115	
P	O		6545-919-6650	9-196-650	<81923>	..FIRST AID KIT,AIRPLANE..... W/O NARCOTICS		EA		1	*	*	*		*	115	45
				S1650-62104	<78286>	.CASE INSTALLATION,DATA.....				1						115	
			1560-774-9505	EC1001	<71379>	..CASE,FLIGHT REPORT HOLDER.. RPL-BY 1680-898-0318										115	

(1) SOURCE, MAINT AND REC CODE (a) SOURCE CODE	(b) MAINT LEVEL	(c) REC CODE	(2) FEDERAL STOCK NUMBER	REFERENCE NUMBER		(3) DESCRIPTION	MODELS USABLE ON CH-34C	(4) UNIT OF ISSUE	(5) QTY INC IN UNIT PACK	(6) QTY INC IN UNIT	(7) 30 DAY DS GS MAINT ALW (a) 1-20	(b) 21-50	(c) 51-100	(8) 1-YR ALW PER 100 EQUIP CNTGCY	(9) DEPOT MAINT ALW PER 100 EQUIP	(10) ILLUSTRATION (a) FIG NO	(b) ITEM NO
			1686-386-4306	0611082	<71379>	..CASE,FLIGHT REPORT HOLDER.. RPL-BY 1680-898-0318										115	
P	O		1680-898-0318	MS26556-1	<96906>	..CASE,FLIGHT REPORT HOLDER.. AND MAP RPLS-- 1560-774-9505, 1680-386-4306 ATTACHING PARTS		EA		1	*	2	2	12	*	115	46
			5305-984-7341	MS35191-273	<96906>	..SCREW,MACHINE..... ---*---		HD		3	*	*	*		*	115	
				S1650-62105	<78286>	.MAP CASE INSTALLATION.....				1						115	
P	O		1680-898-0318	MS26556-1	<96906>	..CASE,FLIGHT REPORT HOLDER.. AND MAP RPLS-- 1560-774-9505, 1680-386-4306 ATTACHING PARTS		EA		1	*	REF	REF	REF	REF	115	47
			5305-984-7341	MS35191-273	<96906>	..SCREW,MACHINE..... ---*---		HD		3	*	*		*	*	115	
				S1650-62355	<78286>	.EXTINGUISHER INSTALLATION,.. FIRE				1						115	
P	O		4210-555-8837	T2	<81349>	..EXTINGUISHER,FIRE,..... MONOBROMOTRIFLUOROMETHANE HAND TYPE,2-3/4 LB. CAPACITY,W/MTG BRACKET MIL-E-52031		EA		1	*	*	*	2	*	115	48
P	O		4210-708-0031	FR23-411973	<81349>	..CYLINDER,FIRE EXTINGUISHER. W/O BRACKET,CHARGED, MIL-E-52031 ATTACHING PARTS		EA		AR	*	*	*		*	115	
			5305-281-8527	AN525-832R8	<88044>	..SCREW,MACHINE..... ---*---		HD		4	*	*	*		*	115	
P	F		1560-626-7234	S1650-62149	<78286>	..BRACKET ASSEMBLY,FIRE..... EXTINGUISHER INSTRUMENT		EA		1	*	*	*		*	115	49
P	O		4210-906-6768	1680CH34-024-3	<81996>	.HOLDER,FIRE AX.....		EA		1	*	*	*		*	115	
				S1650-62144-9	<78286>	.BARRIER INSTALLATION.....				1						115	
X2	F			S1650-62144-1	<78286>	..WEB ASSEMBLY.....		EA		1						115	50
P	O		1560-672-0056	S1650-62144-5	<78286>	..WEB ASSEMBLY,BULKHEAD..... ATTACHING PARTS		EA		1	2	2	3		*	115	
			5305-558-8934	AN525D10R8	<88044>	..SCREW,MACHINE.....		HD		12	*	*	*		*	115	51
			5310-167-0753	AN960PD10L	<88044>	..WASHER,FLAT.....		HD		12	*	*	*		*	115	
			5325-808-0572	MS20230WB20	<96906>	..GROMMET,METALLIC.....		EA		12	*	*	*		*	115	
P	O		5310-653-0182	S1620-61891-8	<78286>	..NUT,CHANNEL..... ---*---		EA		12	2	3	7		*	115	52
			5310-188-7721	AN960PD6	<88044>	...WASHER,FLAT.....		HD		4	*	*	*		*	115	
			5325-808-0572	MS20230WB20	<96906>	...GROMMET,METALLIC.....		EA		4	*	*	*		*	115	
P	F		1560-657-2858	S1650-62145	<78286>	...TUBE ASSEMBLY.....		EA		1	*	2	2		*	115	54
P	O		5945-642-4460	13022-1	<71468>	..SOLENOID,ELECTRICAL..... ATTACHING PARTS		EA		1	*	*	*		*	115	55
			5305-180-0010	AN525-10R8	<88044>	..SCREW,MACHINE.....		HD		2	*	*	*		*	115	
			5310-680-7296	NAS620-10L	<80205>	..WASHER,FLAT.....		EA		2	*	*	*		*	115	
			5305-180-0010	AN525-10R8	<88044>	..SCREW,MACHINE..... ---*---		HD		2	*	*	*		*	115	
				S1650-62135	<78286>	.SEAL INSTALLATION.....				1						115	

(1) SOURCE, MAINT AND REC CODE (a) SOURCE CODE	(b) MAINT LEVEL	(c) REC CODE	(2) FEDERAL STOCK NUMBER	REFERENCE NUMBER		(3) DESCRIPTION	MODELS USABLE ON CH-34C	(4) UNIT OF ISSUE	(5) QTY INC IN UNIT PACK	(6) QTY INC IN UNIT	(7) 30-DAY DS GS MAINT ALW (a) 1-20	(b) 21-50	(c) 51-100	(8) 1-YR ALW PER 100 EQUIP CNTGCY	(9) DEPOT MAINT ALW PER 100 EQUIP	(10) ILLUSTRATION (a) FIG NO	(b) ITEM NO
P	O		1560-701-9955	S1650-62135-8	<78286>	..SEAL ASSEMBLY.....		EA		1	*	2	2		*	115	56
				S1650-62361	<78286>	.BOOT INSTALLATION.....				1						115	
P	O		1560-675-5790	S1650-62361-10	<78286>	..BOOT ASSEMBLY RPLS-..... 1560-671-4922 ATTACHING PARTS		EA		1	2	2	3		*	115	57
			5305-059-8670	AN526DD632R8	<88044>	..SCREW,MACHINE..... ---*---		EA		8	*	*	*		*	115	58
MF	O			S1650-62361-2	<78286>	..DOUBLER,PYLON FOLD BRACKET. MAKEFR AR 9535-554-1415 AL ALLY SH		EA		1						115	59
MF	O			S1650-62361-3	<78286>	..DOUBLER,PYLON FOLD BRACKET. MAKEFR AR 9535-554-1415 AL ALLY SH		EA		1						115	60
				S1650-61300-1	<78286>	.TROOP SEAT INSTALLATION..... USBL EFF 53-4475 THRU 56-4312 SEE FIG.117 FOR BREAKDOWN				1						115	61
				S1650-61360	<78286>	.TROOP SEAT INSTALLATION..... USBL EFF 56-4313 AND SUBSEQUENT SEE FIG.118 FOR BREAKDOWN				1						115	
				S1650-61250	<78286>	.LITTER INSTALLATION SEE.... FIG.120 FOR BREAKDOWN				1						115	
				S1650-62195	<78286>	.CARGO SLING INSTALLATION.... SEE FIG.122 FOR BREAKDOWN				1						115	62
P	O		1680-516-8427	51J3817	<80049>	.HARNESS,AIR SAFETY.....		EA		1	*	*	*		*	115	63
				S1650-62300	<78286>	.EYE BOLT AND RING..... INSTALLATION				1						115	
P	O		1560-544-0920	S1650-62303	<78286>	..EYE BOLT AND RING..... ATTACHING PARTS		EA		1	*	2	2		*	115	64
			5310-184-8980	AN960PD516L	<88044>	..WASHER,FLAT.....		HD		1	*	*	*		*	115	65
			5310-088-0553	MS21044N5	<96906>	..NUT,SELF-LOCKING,HEXAGON... ---*---		HD		1	*	*	*		*	115	
			1560-691-4467	S1650-62301	<78286>	..FILLER,SAFETY BELT..... RPL-BY PN S1650-62301-1										115	
X2	O		1560-798-3630	S1650-62301-1	<78286>	..FILLER,SAFETY BELT..... RPLS-- 1560-691-4467		EA		1	*	*	*		*	115	66
P	O		1560-654-3179	S1650-62302	<78286>	..SPACER,SAFETY BELT AND..... LITTER TIE DOWN		EA		1	*	*	*		*	115	67
				S1650-61850-2	<78286>	.HEATING SYSTEM..... INSTALLATION SEE FIG.123 FOR BREAKDOWN				1						115	69
				S1650-62170-10	<78286>	.STOWAGE INSTALLATION,..... LITTER AND CARGO STRAP				1						115	
			1670-640-8852	WB000000	<93957>	..TIE DOWN,CARGO,AIRCRAFT.... RPL-BY 1670-360-0551										115	
P	O		1670-360-0551	FDC1126	<98313>	..TIE DOWN,CARGO,AIRCRAFT.... RPLS-- 1670-640-8852		EA		6	*	*	*		*	115	70
X2	F			S1650-62170-6	<78286>	..PLATE-LH.....		EA		1						115	72
P	O		1670-360-0551	FDC1126	<98313>	..TIE DOWN,CARGO,AIRCRAFT.... RPLS-- 1670-640-8852		EA		4					REF	115	79
				S1650-62343-9	<78286>	.SKID RAIL INSTALLATION.....				1						115	84

(1) SOURCE, MAINT AND REC CODE (a) SOURCE CODE	(b) MAINT LEVEL	(c) REC CODE	(2) FEDERAL STOCK NUMBER	REFERENCE NUMBER	(3) DESCRIPTION	MODELS USABLE ON CH-34C	(4) UNIT OF ISSUE	(5) QTY INC IN UNIT PACK	(6) QTY INC IN UNIT	(7) 30-DAY DS GS MAINT ALW (a) 1-20	(b) 21-50	(c) 51-100	(8) 1-YR ALW PER 100 EQUIP CNTGCY	(9) DEPOT MAINT ALW PER 100 EQUIP	(10) ILLUSTRATION (a) FIG NO	(b) ITEM NO
					CONTINUED										115	84
					SEE FIG.127 FOR BREAKDOWN											
				S1650-62175 <78286>	.BLIND FLYING PANEL.....				1						115	
					INSTALLATION SEE FIG.121											
					FOR BREAKDOWN											
				S1650-62211 <78286>	.CURTAIN INSTALLATION,.....				1						115	
					ANTI-GLARE											
P	F		5305-546-6930	559 <61864>	..SCREW,MACHINE.....		EA		8	*	*	*		*	115	85
P	F		5325-174-2923	AN227-8 <88044>	..STUD,FASTENER.....		EA		22	*	*	*		*	115	86
			5325-290-5933	AN227-8B9B <88044>	..FASTENER,SNAP.....		EA		22	*	*	*		*	115	
P	O		1680-624-8168	S1650-62211-1 <78286>	..CURTAIN ASSEMBLY RPLS--...		EA		1	*	2	2		*	115	87
					1680-766-7846											
P	O		5325-276-4945	671 <61864>	...BUTTON.....		EA		30	*	*	*			115	89
P	F		5325-440-3486	C548 <61864>	...SOCKET,SNAP.....		EA		30	*	*	*		*	115	
P	O		5325-276-4945	671 <61864>	....BUTTON.....		EA		1	*	*	*			115	91
P	F		5325-440-3486	C548 <61864>	....SOCKET,SNAP.....		EA		1	*	*	*		REF	115	
			5325-290-5933	AN227-8B9B <88044>	....FASTENER,SNAP.....		EA		1	*	*	*		*	115	92
P	F		5325-174-2923	AN227-8 <88044>	....STUD,FASTENER.....		EA		1	*	*	*		*	115	
				S1650-62183 <78286>	.CURTAIN INSTALLATION,.....				1						115	
					BLACKOUT											
P	F		1680-639-0617	S1650-62183-1 <78286>	..CURTAIN ASSEMBLY.....		EA		1	*	*	*		*	115	94
P	O		1680-639-0618	S1650-62183-2 <78286>	..CURTAIN ASSEMBLY.....		EA		1	*	*	2		*	115	95
P	O		1680-639-0619	S1650-62183-3 <78286>	..CURTAIN ASSEMBLY.....		EA		1	*	*	*		*	115	96
P	O		1680-639-0620	S1650-62183-4 <78286>	..CURTAIN ASSEMBLY.....		EA		1	*	*	2		*	115	97
				S1650-61700-5 <78286>	.RESCUE HOIST INSTALLATION...				1						115	98
					SEE FIG.125 FOR BREAKDOWN											
				S1650-62010-1 <78286>	.SOUND PROOFING.....				1						115	99
					INSTALLATION SEE FIG.126											
					FOR BREAKDOWN											
				S1650-62141-1 <78286>	.VENT INSTALLATION-LH.....				1						115	
				S1650-62141-2 <78286>	.VENT INSTALLATION-RH.....				1						115	
			1560-923-4350	S1650-62146 <78286>	..ARM,VENT,AIRCRAFT.....										115	
					RPL-BY 1560-923-4349											
P	F		1560-923-4349	S1650-62146-2 <78286>	.ARM,VENT,AIRCRAFT.....		EA		1	*	*	*		*	115	100
					RPLS-- 1560-923-4350											
					ATTACHING PARTS											
			5310-183-4406	AN960PD10 <88044>	..WASHER,FLAT.....		HD		2	*	*	*		*	115	101
			5310-877-5798	MS21044D3 <96906>	..NUT,SELF-LOCKING,HEXAGON...		EA		1	*	*	*		*	115	
					---*---											
MF	F			S14-50-5074 <78286>	..CLIP,CABIN VENT.....		EA		1						115	
					MAKEFR											
					AR 9535-167-2280 AL ALLY SH											
X2	F		5355-591-6532	S14-50-5069-2 <78286>	...KNOB.....		EA		1	*	*	*		*	115	102
					ATTACHING PARTS											
				COMM	...PIN.....		EA		1						115	103
					---*---											

(1) SOURCE, MAINT AND REC CODE (a) SOURCE CODE	(b) MAINT LEVEL	(c) REC CODE	(2) FEDERAL STOCK NUMBER	REFERENCE NUMBER	(3) DESCRIPTION	MODELS USABLE ON CH-34C	(4) UNIT OF ISSUE	(5) QTY INC IN UNIT PACK	(6) QTY INC IN UNIT	(7) 30-DAY DS/GS MAINT ALW (a) 1-20	(b) 21-50	(c) 51-100	(8) 1-YR ALW PER 100 EQUIP CNTGCY	(9) DEPOT MAINT ALW PER 100 EQUIP	(10) ILLUSTRATION (a) FIG NO	(b) ITEM NO
				S1650-61100-2 <78286>	PILOT AND CO-PILOTS SEAT..... INSTALLATION SEE FIG.115 FOR NHA										116	
			5305-286-1766	AN525-10R20 <88044>	.SCREW,MACHINE.....		HD		2	*	*	*		*	116	1
			5310-183-4406	AN960PD10 <88044>	.WASHER,FLAT-PILOTS SEAT ONLY		HD		2	*	*	*		*	116	
			5310-877-5797	MS21044N3 <96906>	.NUT,SELF-LOCKING,HEXAGON.... PILOTS SEAT ONLY		EA		2	*	*	*		*	116	
P	F		1560-626-7289	S1650-61158-1 <78286>	.FITTING-PILOTS SEAT ONLY.... ATTACHING PARTS		EA		1	*	*	2		*	116	2
			5306-182-2059	AN3H6A <88044>	.BOLT,MACHINE.....		HD		2	*	*	*		*	116	3
			5310-183-4406	AN960PD10 <88044>	.WASHER,FLAT.....		HD		2	*	*	*		*	116	
					---*---											
P	O		1560-565-5646	S1650-61140 <78286>	.CORD ASSEMBLY,PILOT AND..... CO-PILOT SEAT		EA		4	6	16	31		*	116	4
MF	O			S14-50-2036-2 <78286>	.CORD ASSEMBLY,SAFETY BELT... MAKEFR AR 8305-267-3116 CORD ELAS ATTACHING PARTS		EA		4						116	5
			5306-282-5843	AN3H27A <88044>	.BOLT,MACHINE.....		EA		2	*	*	*		*	116	6
			5310-167-0765	AN970-3 <88044>	.WASHER,FLAT.....		HD		2	*	*	*		*	116	
			5310-877-5797	MS21044N3 <96906>	.NUT,SELF-LOCKING,HEXAGON....		EA		2	*	*	*		*	116	
					---*---											
			5340-580-5787	NAS43HT3-12 <80205>	.SPACER,SLEEVE.....		EA		2	*	*	*		*	116	7
P	O		1560-587-0982	S1650-61118 <78286>	.PIN,PILOT SEAT.....		EA		2	2	4	8		*	116	8
AF	F			S1650-61101-3 <78286>	.SEAT ASSEMBLY-PILOTS.....		EA		1						116	9
AF	F			S1650-61101-4 <78286>	.SEAT ASSEMBLY-CO-PILOTS.....		EA		1						116	
P	O	R	1560-587-0979	S1650-61110 <78286>	..BUCKET ASSEMBLY..... ATTACHING PARTS		EA		1	*	*	*		*	116	10
			5306-144-3870	AN25-36 <88044>	..BOLT,CLEVIS.....		EA		2	*	*	*		*	116	11
			5310-187-2399	AN960PD516 <88044>	..WASHER,FLAT.....		HD		4	*	*	*		*	116	
			5310-660-3381	MS21083N5 <96906>	..NUT,SELF-LOCKING,HEXAGON...				2	*	*	*		*	116	
					---*---											
P	F		1560-340-1148	S1650-61138 <78286>	..FITTING ASSEMBLY..... ATTACHING PARTS		EA		2	*	*	*		*	116	12
			5306-144-4072	AN24-26A <88044>	..BOLT,CLEVIS.....		EA		1	*	*	*		*	116	13
			5310-187-2354	AN960PD416 <88044>	..WASHER,FLAT.....		HD		2	*	*	*		*	116	
			5310-877-5796	MS21044N4 <96906>	..NUT,SELF-LOCKING,HEXAGON...		EA		1	*	*	*		*	116	
			5310-187-2399	AN960PD516 <88044>	..WASHER,FLAT.....		HD		1	*	*	*		*	116	14
			5310-660-3381	MS21083N5 <96906>	..NUT,SELF-LOCKING,HEXAGON...				1	*	*	*		*	116	
					---*---											
			3120-661-7390	NAS75-5-022 <80205>	...BUSHING,SLEEVE.....		EA		2	*	*	*		*	116	
MF	F			S1650-61168 <78286>	..BUSHING..... MAKEFR AR 3120-662-9211 BUSHING		EA		2						116	15
P	O		1680-587-0980	S1650-61115 <78286>	..SPRING,PILOT SEAT.....		EA		2	*	*	*		*	116	16
P	F		1560-566-3247	S1650-61113 <78286>	..TUBE ASSEMBLY,PAN SUPPORT.. PILOTS		EA		1	*	*	*		*	116	17
P	O	R	1680-587-0981	S1650-61117 <78286>	..BACK ASSEMBLY,PILOT SEAT...		EA		1	*	*	*		*	116	18
P	O	R	1680-587-0983	S1650-61143 <78286>	..BACK ASSEMBLY,CO-PILOT SEAT		EA		1	*	*	*		*	116	
				COMM	...PIN-SPIROL 1/8 X 3/4 IN.,.. MEDIUM		EA		1						116	19
AF	O			S1650-61136-6 <78286>	...HANDLE ASSEMBLY,SEAT.....		EA		1						116	20

(1) SOURCE, MAINT AND REC CODE (a) SOURCE CODE	(b) MAINT LEVEL	(c) REC CODE	(2) FEDERAL STOCK NUMBER	REFERENCE NUMBER		(3) DESCRIPTION	MODELS USABLE ON CH-34C	(4) UNIT OF ISSUE	(5) QTY INC IN UNIT PACK	(6) QTY INC IN UNIT	(7) 30-DAY DS GS MAINT ALW (a) 1-20	(b) 21-50	(c) 51-100	(8) 1-YR ALWPER 100 EQUIP CNTGCY	(9) DEPOT MAINT ALWPER 100 EQUIP	(10) ILLUSTRATION (a) FIG NO	(b) ITEM NO
AF	F			S1650-61136-5	<78286>	...HANDLE ASSEMBLY-CO-PILOTS.		EA		1						116	
P	O		5355-552-0683	S1650-61136-4	<78286>	....KNOB.....		EA		1	*	*	*		*	116	21
						ATTACHING PARTS											
				COMM		....PIN-SPIROL 0.131 X 3/4...		EA		1						116	22
						IN.,SOFT											
						---*---											
P	O		1680-536-8051	S1650-61136-8	<78286>	....TUBE ASSEMBLY,SEAT.....		EA		1	*	*	*		*	116	23
						ADJUSTMENT											
P	O		1680-536-8048	S1650-61136-7	<78286>	....TUBE ASSEMBLY,SEAT.....		EA		1	*	*	*		*	116	
						ADJUSTMENT											
						ATTACHING PARTS											
			5306-150-9911	AN23-15A	<88044>	....BOLT,CLEVIS.....		EA		1	*	*	*		*	116	24
			5310-167-0753	AN960PD10L	<88044>	....WASHER,FLAT.....		HD		2	*	*	*		*	116	
						---*---											
			5310-877-5797	MS21044N3	<96906>	....NUT,SELF-LOCKING,HEXAGON.		EA		1	*	*	*		*	116	
P	O		1680-536-8052	S1650-61136-9	<78286>	....TUBE,SEAT ADJUSTMENT.....		EA		1	*	*	*		*	116	25
						ATTACHING PARTS											
			5306-150-9911	AN23-15A	<88044>	....BOLT,CLEVIS.....		EA		1	*	*	*		*	116	26
			5310-167-0753	AN960PD10L	<88044>	....WASHER,FLAT.....		HD		2	*	*	*		*	116	
			5310-877-5797	MS21044N3	<96906>	....NUT,SELF-LOCKING,HEXAGON.		EA		1	*	*	*		*	116	
						---*---											
P	O		1680-536-8047	S1650-61136-10	<78286>	....TUBE,SEAT ADJUSTMENT.....		EA		1	*	*	*		*	116	27
				COMM		...PIN.....		EA		1						116	28
P	O		1680-536-8060	S1650-61137	<78286>	...LEVER ASSEMBLY,HEIGHT.....		EA		1	*	*	*		*	116	29
						ADJUSTMENT											
P	O		1560-565-5645	S1650-61134	<78286>	...BRACKET,ANGLE.....		EA		1	*	*	*		*	116	30
						ATTACHING PARTS											
			5305-145-6971	AN503-8-6	<88044>	...SCREW,MACHINE.....		HD		1	*	*	*		*	116	31
			5310-184-8966	AN960PD8	<88044>	...WASHER,FLAT.....		HD		1	*	*	*		*	116	
						---*---											
P	O		5315-565-8496	S1650-61131	<78286>	...PIN,SHOULDER,HEADLESS.....		EA		1	*	*	*		*	116	32
P	O		1680-663-3442	S1650-61132	<78286>	...SPRING,HELICAL,COMPRESSION		EA		1	*	*	*		*	116	33
P	O		1560-509-4676	S1650-61146-1	<78286>	...FITTING ASSEMBLY,PILOT....		EA		1	*	*	*		*	116	34
						AND CO-PILOT SEAT											
						RPLS-- 1560-568-7768											
			1560-091-4165	S1650-611192	<78286>	...FITTING ASSEMBLY,PILOT....										116	
						AND CO-PILOT SEAT											
						RPL-BY 1560-330-6185											
P	F		1560-330-6185	S1650-61146-2	<78286>	...FITTING ASSEMBLY,PILOT....		EA		1	*	*	*		*	116	
						AND CO-PILOT SEAT											
						RPLS-- 1560-091-4165											
P	F		1680-587-0984	S1650-61144-1	<78286>	....FITTING ASSEMBLY,PILOT...		EA		1	*	*	*		*	116	35
						AND CO-PILOT SEAT											
P	F		1680-570-0666	S1650-61144-2	<78286>	....FITTING ASSEMBLY,SEAT,...		EA		1	*	*	*		*	116	
						PILOT											
P	F		1680-570-0667	S1650-61145-1	<78286>	....FITTING ASSEMBLY,SEAT,...		EA		1	*	*	*		*	116	36
						PILOT											
P	F		1680-570-0670	S1650-61145-2	<78286>	....FITTING ASSEMBLY,SEAT,...		EA		1	*	*	*		*	116	
						PILOT											
						ATTACHING PARTS											
			5306-182-1964	AN4H16A	<88044>	....BOLT,MACHINE.....		HD		4	*	*	*		*	116	37
			5310-187-2354	AN960PD416	<88044>	....WASHER,FLAT.....		HD		8	*	*	*		*	116	

(1) SOURCE, MAINT AND REC CODE (a) SOURCE CODE	(b) MAINT LEVEL	(c) REC CODE	(2) FEDERAL STOCK NUMBER	REFERENCE NUMBER		(3) DESCRIPTION	MODELS USABLE ON CH-34C	(4) UNIT OF ISSUE	(5) QTY INC IN UNIT PACK	(6) QTY INC IN UNIT	(7) 30-DAY DS/GS MAINT ALW (a) 1-20	(b) 21-50	(c) 51-100	(8) 1-YR ALW PER 100 EQUIP CNTGCY	(9) DEPOT MAINT ALW PER 100 EQUIP	(10) ILLUSTRATION (a) FIG NO	(b) ITEM NO
			5310-877-5796	MS21044N4	<96906>	....NUT,SELF-LOCKING,HEXAGON.		EA		4	*	*	*		*	116	
			5306-182-2005	AN3H14A	<88044>	....BOLT,MACHINE.....		HD		2	*	*	*		*	116	38
			5310-167-0753	AN960PD10L	<88044>	....WASHER,FLAT.....		HD		4	*	*	*		*	116	
			5310-877-5797	MS21044N3	<96906>	....NUT,SELF-LOCKING,HEXAGON.		EA		2	*	*	*		*	116	
						---*---											
X2	F		2805-767-0492	S1650-61152-10	<78286>	...SUPPORT ASSEMBLY-CO-PILOT.		EA		1	*	*	*		*	116	
X2	F			S1650-61152-11	<78286>	...SUPPORT ASSEMBLY-CO-PILOT.		EA		1						116	39
						ATTACHING PARTS											
			5306-292-8285	AN174H10A	<88044>	...BOLT,MACHINE.....		EA		2	*	*	*		*	116	40
			5310-184-9001	AN960PD416L	<88044>	...WASHER,FLAT.....		HD		4	*	*	*		*	116	
			5310-877-5796	MS21044N4	<96906>	...NUT,SELF-LOCKING,HEXAGON..		EA		2	*	*	*		*	116	
						---*---											
P	O		1680-517-0337	HR30-1001-24-1A	<45402>	....REEL,SHOULDER HARNESS....		EA		1	*	2	2	22	*	116	41
						INERTIA LOCK-CO-PILOTS											
P	O		1680-309-4708	HR30-1001-32-1A	<45402>	....REEL,SHOULDER HARNESS....		EA		1	*	2	2		*	116	
						INERTIA LOCK-PILOTS											
						ATTACHING PARTS											
			5306-144-4072	AN24-26A	<88044>	....BOLT,CLEVIS.....		EA		1	*	*	*		*	116	42
			5306-156-2389	AN24-34A	<88044>	....BOLT,CLEVIS U/W.....		EA		2	*	*	*		*	116	
						1680-309-4708											
			5310-141-1795	AN960-416	<88044>	....WASHER,FLAT.....		HD		2	*	*	*		*	116	
			5310-877-5796	MS21044N4	<96906>	....NUT,SELF-LOCKING,HEXAGON.		EA		1	*	*	*		*	116	
			5306-156-2703	AN24-19	<88044>	....BOLT,CLEVIS.....		EA		1	*	*	*		*	116	43
			5306-156-2389	AN24-34A	<88044>	....BOLT,CLEVIS U/W		EA		2	*	*	*		*	116	
						1680-309-4708											
			5310-141-1795	AN960-416	<88044>	....WASHER,FLAT.....		HD		2	*	*	*		*	116	
			5310-877-5796	MS21044N4	<96906>	....NUT,SELF-LOCKING,HEXAGON.		EA		1	*	*	*		*	116	
			5306-151-0523	AN24-21	<88044>	....BOLT,CLEVIS.....		EA		2	*	*	*		*	116	44
			5306-156-2389	AN24-34A	<88044>	....BOLT,CLEVIS U/W.....		EA		2	*	*	*		*	116	
						1680-309-4708											
			5310-141-1795	AN960-416	<88044>	....WASHER,FLAT.....		HD		4	*	*	*		*	116	
			5310-877-5796	MS21044N4	<96906>	....NUT,SELF-LOCKING,HEXAGON.		EA		2	*	*	*		*	116	
						---*---											
P	D		1680-509-7594	HR30118	<45402>	.....SEAR,PRIMARY,HARNESS....		EA		1					*	116	
						REEL											
						U/O 1680-309-4708											
P	D		1680-509-7602	HR30153	<45402>	.....SPRING,HELICAL.....		EA		1					*	116	
						COMPRESSION											
						U/O 1680-309-4708											
X1				HR30112	<45402>	.....SHIELD,LINKAGE,HARNESS..		EA		1						116	
						U/O 1680-517-0337											
P	H		1680-893-2867	HR30140	<45402>	.....CONTROL ASSEMBLY U/O...		EA		1	*	*	*	2	*	116	
						1680-309-4708											
P	H		1680-509-7598	HR30127	<45402>	.....CABLE ASSEMBLY,HARNESS..		EA		2	*	*	*		*	116	
						U/O 1680-309-4708											
X2	F		5310-543-4901	S1650-61152-4	<78286>	....WASHER,FLAT.....		EA		2	*	*	*		*	116	45
X1				S1650-61152-1	<78286>	....WELD ASSEMBLY.....		EA		1						116	
X1				S1650-61152-12	<78286>	....WELD ASSEMBLY.....		EA		1						116	46

(1) SOURCE, MAINT AND REC CODE (a) SOURCE CODE	(b) MAINT LEVEL	(c) REC CODE	(2) FEDERAL STOCK NUMBER	REFERENCE NUMBER		(3) DESCRIPTION	MODELS USABLE ON CH-34C	(4) UNIT OF ISSUE	(5) QTY INC IN UNIT PACK	(6) QTY INC IN UNIT	(7) 30-DAY DS GS MAINT ALW (a) 1-20	(b) 21-50	(c) 51-100	(8) 1-YR ALW PER 100 EQUIP CNTGCY	(9) DEPOT MAINT ALW PER 100 EQUIP	(10) ILLUSTRATION (a) FIG NO	(b) ITEM NO
				S1650-61300-1	<78286>	TROOP SEAT INSTALLATION..... USBL EFF 53-4475 THRU 56-4312 SEE FIG.115 FOR NHA										117	
			1680-087-0296	9004	<70133>	.BELT,AIRCRAFT SAFETY..... RPL-BY 1680-447-9504										117	
P	O		1680-447-9504	56E589	<99238>	.BELT,AIRCRAFT,SAFETY LAP,... RPLS-- 1680-087-0296		EA		12	*	*	*		*	117	1
P	O		5306-515-7310	ACA2128	<76912>	.BOLT,RING..... ATTACHING PARTS		EA		13	2	2	4	48	*	117	2
P	O		5310-567-0256	S1650-61328	<78286>	.WASHER,SADDLE.....		EA		2	6	14	28		*	117	3
			5310-187-2354	AN960PD416	<88044>	.WASHER,FLAT.....		HD		1	*	*	*		*	117	4
			5310-877-5796	MS21044N4	<96906>	.NUT,SELF-LOCKING,HEXAGON.... ---*---		EA		1	*	*	*		*	117	5
P	F		1560-560-9148	S1650-61312	<78286>	.ROD ASSEMBLY,TROOP SEAT..... ATTACHING PARTS		EA		1	*	*	*		*	117	6
			5306-182-1966	AN4H20A	<88044>	.BOLT,MACHINE.....		HD		1	*	*	*		*	117	7
			5310-187-2354	AN960PD416	<88044>	.WASHER,FLAT.....		HD		2	*	*	*		*	117	
			5310-877-5796	MS21044N4	<96906>	.NUT,SELF-LOCKING,HEXAGON....		EA		1	*	*	*		*	117	
			5306-182-1964	AN4H16A	<88044>	.BOLT,MACHINE.....		HD		1	*	*	*		*	117	8
			5310-187-2354	AN960PD416	<88044>	.WASHER,FLAT.....		HD		2	*	*	*		*	117	
			5310-877-5796	MS21044N4	<96906>	.NUT,SELF-LOCKING,HEXAGON....		EA		1	*	*	*		*	117	
			5306-180-3360	AN4H21A	<88044>	.BOLT,MACHINE.....		HD		1	*	*	*		*	117	9
			5310-187-2354	AN960PD416	<88044>	.WASHER,FLAT.....		HD		2	*	*	*		*	117	
			5310-877-5796	MS21044N4	<96906>	.NUT,SELF-LOCKING,HEXAGON....		EA		1	*	*	*		*	117	
			5306-182-1966	AN4H20A	<88044>	.BOLT,MACHINE.....		HD		1	*	*	*		*	117	10
			5310-187-2354	AN960PD416	<88044>	.WASHER,FLAT.....		HD		2	*	*	*		*	117	
			5310-877-5796	MS21044N4	<96906>	.NUT,SELF-LOCKING,HEXAGON.... ---*---		EA		1	*	*	*		*	117	
P	O		1560-675-5802	S1650-61317-1	<78286>	.SUPPORT,DIAGONAL RPLS--.... 1560-701-5707		EA		1	*	*	*		*	117	11
P	O		1560-823-5986	S1650-61387-3	<78286>	..TUBE ASSEMBLY.....		EA		1	*	2	2		*	117	
MF	F			S1656-61313	<78286>	.TUBE,TROOP SEAT..... MAKEFR 4710-278-6365 TUBE		EA		1						117	
			5340-985-0743	NAS1354DS7S08D	<80205>	...PIN,QUICK RELEASE.....		EA		1	*	*	*		*	117	12
			1560-587-6298	S1650-61321	<78286>	...CHAIN ASSEMBLY TROOP SEAT. INSTALLATION RPL-BY 4010-058-2321										117	
P	O		4010-058-2321	NAS1201B10A9B	<80205>	...CHAIN ASSEMBLY,TROOP SEAT. INSTALLATION RPLS-- 1560-587-6298 ATTACHING PARTS		EA		1	*	*	*		*	117	13
			5305-770-2529	MS51959-11	<96906>	...SCREW,MACHINE..... ---*---		EA		1	*	*	*		*	117	14
P	O		1560-544-0930	S1650-61320-1	<78286>	..COVER,TROOP SEATS.....		EA		1	*	*	*		*	117	15
X2	O			S1650-61320-4	<78286>	..SPACER.....		EA		1						117	16
P	O		1680-570-4895	S1650-61319-1	<78286>	..PLATE,TROOP SEAT..... FURNISHINGS ATTACHING PARTS		EA		1	*	*	2		*	117	17
			5306-182-2061	AN3H10A	<88044>	..BOLT,MACHINE..... ---*---		HD		2	*	*	*		*	117	18

(1) SOURCE, MAINT AND REC CODE (a) SOURCE CODE	(b) MAINT LEVEL	(c) REC CODE	(2) FEDERAL STOCK NUMBER	REFERENCE NUMBER	(3) DESCRIPTION	MODELS USABLE ON CH-34C	(4) UNIT OF ISSUE	(5) QTY INC IN UNIT PACK	(6) QTY INC IN UNIT	(7) 30-DAY DS/GS MAINT ALW (a) 1-20	(b) 21-50	(c) 51-100	(8) 1-YR ALW PER 100 EQUIP CNTGCY	(9) DEPOT MAINT ALW PER 100 EQUIP	(10) ILLUSTRATION (a) FIG NO	(b) ITEM NO
P	O		1560-544-0915	S1650-61305	<78286> .FITTING,SUPPORT,SEAT.....		EA		1	*	2	2		*	117	19
					ATTACHING PARTS											
			5306-182-2016	AN4H5A	<88044> .BOLT,MACHINE.....		HD		4	*	*	*		*	117	20
			5310-187-2354	AN960PD416	<88044> .WASHER,FLAT.....		HD		4	*	*	*		*	117	
					---*---											
P	O		1680-536-7546	S1650-61306	<78286> .FITTING,TROOP SEAT RPLS--..		EA		1	*	*	*		*	117	21
					1560-626-7243											
					ATTACHING PARTS											
			5306-182-2060	AN3H7A	<88044> .BOLT,MACHINE.....		HD		4	*	*	*		*	117	22
			5310-183-4406	AN960PD10	<88044> .WASHER,FLAT.....		HD		4	*	*	*		*	117	
					---*---											
P	O		1560-544-0914	S1650-61304	<78286> .FITTING,SUPPORT,SEAT.....		EA		1	*	*	*		*	117	23
					ATTACHING PARTS											
			5306-182-2060	AN3H7A	<88044> .BOLT,MACHINE.....		HD		4	*	*	*		*	117	24
			5310-183-4406	AN960PD10	<88044> .WASHER,FLAT.....		HD		4	*	*	*		*	117	
					---*---											
MF	F			S1650-61310	<78286> .TUBE.....		EA		1						117	25
					MAKEFR											
					AR 4710-279-0901 AL ALLY SH											
P	O		1680-825-8489	ACA1143-52	<76912> .SEAT,AIRCRAFT.....		EA		1	*	2	2	22	*	117	26
					RPLS-- 1680-033-5479,											
					1680-516-6813,											
					1680-600-6143,&											
					1680-612-1556											
AF	O			S1650-61333	<78286> .FITTING,TROOP SEAT SUPPORT..		EA		1						117	27
					ATTACHING PARTS											
			5306-182-2059	AN3H6A	<88044> .BOLT,MACHINE.....		HD		4	*	*	*		*	117	28
			5310-183-4406	AN960PD10	<88044> .WASHER,FLAT.....		HD		4	*	*	*		*	117	
					---*---											
P	O		5340-544-0917	S1650-61332	<78286> ..CATCH.....		EA		2	2	4	8		*	117	29
P	O		1560-546-1136	S1650-61301	<78286> ..FITTING,TROOP SEAT.....		EA		1	*	2	2		*	117	30
					SUPPORT,UPPER											
P	O		1560-613-9570	S1650-61311	<78286> .TUBE ASSEMBLY.....		EA		1	*	*	*		*	117	31
			1560-613-9570	505275	<02106> ADDED PART NO.FOR ABOVE ITEM.		EA			*	*	*			117	31
					ATTACHING PARTS											
			5306-182-1964	AN4H16A	<88044> .BOLT,MACHINE.....		HD		1	*	*	*		*	117	32
			5310-187-2354	AN960PD416	<88044> .WASHER,FLAT.....		HD		2	*	*	*		*	117	
			5310-877-5796	MS21044N4	<96906> .NUT,SELF-LOCKING,HEXAGON....		EA		1	*	*	*		*	117	
			5306-182-1966	AN4H20A	<88044> .BOLT,MACHINE.....		HD		1	*	*	*		*	117	33
			5310-187-2354	AN960PD416	<88044> .WASHER,FLAT.....		HD		2	*	*	*		*	117	
			5310-877-5796	MS21044N4	<96906> .NUT,SELF-LOCKING,HEXAGON....		EA		1	*	*	*		*	117	
			5306-180-3360	AN4H21A	<88044> .BOLT,MACHINE.....		HD		1	*	*	*		*	117	34
			5310-187-2354	AN960PD416	<88044> .WASHER,FLAT.....		HD		2	*	*	*		*	117	
			5310-877-5796	MS21044N4	<96906> .NUT,SELF-LOCKING,HEXAGON....		EA		1	*	*	*		*	117	
			5306-182-1966	AN4H20A	<88044> .BOLT,MACHINE.....		HD		1	*	*	*		*	117	35
			5310-187-2354	AN960PD416	<88044> .WASHER,FLAT.....		HD		2	*	*	*		*	117	
			5310-877-5796	MS21044N4	<96906> .NUT,SELF-LOCKING,HEXAGON....		EA		1	*	*	*		*	117	
					---*---											
P	O		1560-823-5986	S1650-61387-3	<78286> .TUBE ASSEMBLY.....		EA		1	*	REF	REF		REF	117	
			5340-985-0743	NAS1354DS7S08D	<80205> ..PIN,QUICK RELEASE.....		EA		1	*	*	*		*	117	36
			1560-587-6298	S1650-61321	<78286> ..CHAIN ASSEMBLY,TROOP SEAT..		EA		1						117	
					INSTALLATION											

(1) SOURCE, MAINT AND REC CODE (a) SOURCE CODE	(b) MAINT LEVEL	(c) REC CODE	(2) FEDERAL STOCK NUMBER	REFERENCE NUMBER	(3) DESCRIPTION	MODELS USABLE ON CH-34C	(4) UNIT OF ISSUE	(5) QTY INC IN UNIT PACK	(6) QTY INC IN UNIT	(7) 30-DAY DS GS MAINT ALW (a) 1-20	(b) 21-50	(c) 51-100	(8) 1-YR ALW PER 100 EQUIP CNTGCY	(9) DEPOT MAINT ALW PER 100 EQUIP	(10) ILLUSTRATION (a) FIG NO	(b) ITEM NO
					CONTINUED										117	
					INSTALLATION RPL-BY 4010-058-2321											
			5305-770-2529	MS51959-11 <96906>	..SCREW,MACHINE.....		EA		1	*	*	*		*	117	38
P	O		1560-544-0932	S1650-61320-3 <78286>	.COVER,TROOP SEATS.....		EA		1	*	*	*		*	117	39
X2	O			S1650-61320-4 <78286>	.SPACER.....		EA		1						117	40
P	O		1680-570-4895	S1650-61319-1 <78286>	.PLATE,TROOP SEAT,FURNISHINGS		EA		1	*	*	REF		REF	117	41
					ATTACHING PARTS											
			5306-182-2061	AN3H10A <88044>	.BOLT,MACHINE.....		HD		2	*	*	*		*	117	42
					---*---											
P	O		1560-546-1139	S1650-61326 <78286>	.FITTING.....		EA		1	*	*	*		*	117	43
					ATTACHING PARTS											
			5306-182-2058	AN3H5A <88044>	.BOLT,MACHINE.....		EA		4	*	*	*		*	117	44
			5310-183-4406	AN960PD10 <88044>	.WASHER,FLAT.....		HD		4	*	*	*		*	117	
					---*---											
P	O		1560-544-0915	S1650-61305 <78286>	.FITTING,SUPPORT,SEAT.....		EA		1	*	REF	REF		REF	117	45
					ATTACHING PARTS											
			5306-182-2016	AN4H5A <88044>	.BOLT,MACHINE.....		HD		4	*	*	*		*	117	46
			5310-187-2354	AN960PD416 <88044>	.WASHER,FLAT.....		HD		4	*	*	*		*	117	
					---*---											
P	O		1560-544-0914	S1650-61304 <78286>	.FITTING,SUPPORT,SEAT.....		EA		1	*	*	*		REF	117	47
					ATTACHING PARTS											
			5306-182-2060	AN3H7A <88044>	.BOLT,MACHINE.....		HD		4	*	*	*		*	117	48
			5310-183-4406	AN960PD10 <88044>	.WASHER,FLAT.....		HD		4	*	*	*		*	117	
					---*---											
P	O		1560-546-1138	S1650-61325 <78286>	.FITTING,TROOP SEAT.....		EA		1	*	2	2		*	117	49
					INSTALLATION											
					ATTACHING PARTS											
			5306-182-2060	AN3H7A <88044>	.BOLT,MACHINE.....		HD		4	*	*	*		*	117	50
			5310-183-4406	AN960PD10 <88044>	.WASHER,FLAT.....		HD		4	*	*	*		*	117	
					---*---											
P	O		1560-544-0913	S1650-61302 <78286>	.FITTING.....		EA		1	*	*	*		*	117	51
					ATTACHING PARTS											
			5306-182-2060	AN3H7A <88044>	.BOLT,MACHINE.....		HD		4	*	*	*		*	117	52
			5310-183-4406	AN960PD10 <88044>	.WASHER,FLAT.....		HD		4	*	*	*		*	117	
					---*---											
P	O		1680-701-4734	S1650-61309 <78286>	.TUBE,TROOP SEAT INSTALLATION		EA		1	*	*	2		*	117	53
					ATTACHING PARTS											
			5306-182-1965	AN4H17A <88044>	.BOLT,MACHINE.....		HD		1	*	*	*		*	117	54
			5310-187-2354	AN960PD416 <88044>	.WASHER,FLAT.....		HD		2	*	*	*		*	117	
			5310-877-5796	MS21044N4 <96906>	.NUT,SELF-LOCKING,HEXAGON....		EA		1	*	*	*		*	117	
			5306-144-4072	AN24-26A <88044>	.BOLT,CLEVIS.....		EA		2	*	*	*		*	117	55
			5310-184-9001	AN960PD416L <88044>	.WASHER,FLAT.....		HD		4	*	*	*		*	117	
			5310-877-5796	MS21044N4 <96906>	.NUT,SELF-LOCKING,HEXAGON....		EA		2	*	*	*		*	117	
					---*---											
P	O		1680-516-6815	ACA1141-21 <76912>	.SEAT,AIRCRAFT.....		EA		1	2	2	3		*	117	56
P	O		1680-825-8489	ACA1143-52 <76912>	.SEAT,AIRCRAFT.....		EA		1	*	REF	REF	REF	REF	117	57
					RPLS-- 1680-033-5479,											
					1680-516-6813,											
					1680-600-6143,&											
					1680-612-1556											

(1) SOURCE, MAINT AND REC CODE (a) SOURCE CODE	(b) MAINT LEVEL	(c) REC CODE	(2) FEDERAL STOCK NUMBER	REFERENCE NUMBER		(3) DESCRIPTION	MODELS USABLE ON CH-34C	(4) UNIT OF ISSUE	(5) QTY INC IN UNIT PACK	(6) QTY INC IN UNIT	(7) 30-DAY DS/GS MAINT ALW (a) 1-20	(b) 21-50	(c) 51-100	(8) 1-YR ALW PER 100 EQUIP CNTGCY	(9) DEPOT MAINT ALW PER 100 EQUIP	(10) ILLUSTRATION (a) FIG NO	(b) ITEM NO
P	O		1680-546-1137	S1650-61307	<78286>	.FITTING,TROOP SEAT..... INSTALLATION ATTACHING PARTS		EA		1	*	*	*		*	117	58
			5306-182-2058	AN3H5A	<88044>	.BOLT,MACHINE.....		EA		4	*	*	*		*	117	59
			5310-183-4406	AN960PD10	<88044>	.WASHER,FLAT.....		HD		4	*	*	*		*	117	
			5310-877-5797	MS21044N3	<96906>	.NUT,SELF-LOCKING,HEXAGON....		EA		4	*	*	*		*	117	
						---*---											
P	O		1680-544-0951	S1650-61303-1	<78286>	.FITTING,TROOP SEAT..... ATTACHING PARTS		EA		2	*	*	*		*	117	60
			5306-182-2059	AN3H6A	<88044>	.BOLT,MACHINE.....		HD		4	*	*	*		*	117	61
			5310-183-4406	AN960PD10	<88044>	.WASHER,FLAT.....		HD		4	*	*	*		*	117	
						---*---											
AO	O			S1650-61334	<78286>	.FITTING ASSEMBLY..... ATTACHING PARTS		EA		1						117	62
			5306-182-2059	AN3H6A	<88044>	.BOLT,MACHINE.....		HD		4	*	*	*		*	117	63
			5310-183-4406	AN960PD10	<88044>	.WASHER,FLAT.....		HD		4	*	*	*		*	117	
						---*---											
P	O		5340-544-0917	S1650-61332	<78286>	..CATCH.....		EA		2	REF	REF	REF		REF	117	64
P	O		1560-546-1136	S1650-61301	<78286>	..FITTING,TROOP SEAT..... SUPPORT,UPPER		EA		1	*	REF	REF		REF	117	65
MF	F			S1650-61316	<78286>	.TUBE..... ATTACHING PARTS		EA		1						117	66
			5306-182-1966	AN4H20A	<88044>	.BOLT,MACHINE.....		HD		1	*	*	*		*	117	67
			5310-187-2354	AN960PD416	<88044>	.WASHER.....		HD		2	*	*	*		*	117	
			5310-877-5796	MS21044N4	<96906>	.NUT,SELF-LOCKING,HEXAGON....		EA		1	*	*	*		*	117	
			5306-182-1964	AN4H16A	<88044>	.BOLT,MACHINE.....		HD		1	*	*	*		*	117	68
			5310-187-2354	AN960PD416	<88044>	.WASHER,FLAT.....		HD		2	*	*	*		*	117	
			5310-877-5796	MS21044N4	<96906>	.NUT,SELF-LOCKING,HEXAGON....		EA		1	*	*	*		*	117	
			5306-180-3360	AN4H21A	<88044>	.BOLT,MACHINE.....		HD		1	*	*	*		*	117	69
			5310-187-2354	AN960PD416	<88044>	.WASHER,FLAT.....		HD		2	*	*	*		*	117	
			5310-877-5796	MS21044N4	<96906>	.NUT,SELF-LOCKING,HEXAGON....		EA		1	*	*	*		*	117	
			5306-182-1966	AN4H20A	<88044>	.BOLT,MACHINE.....		HD		1	*	*	*		*	117	70
			5310-187-2354	AN960PD416	<88044>	.WASHER,FLAT.....		HD		2	*	*	*		*	117	
			5310-877-5796	MS21044N4	<96906>	.NUT,SELF-LOCKING,HEXAGON....		EA		1	*	*	*		*	117	
						---*---											
			5340-985-0743	NAS1354DS7S08D	<80205>	..PIN,QUICK RELEASE.....		EA		1	*	*	*		*	117	71
			1560-587-6298	S1650-61321	<78286>	..CHAIN ASSEMBLY,TROOP SEAT.. INSTALLATION RPL-BY 4010-058-2321										117	
P	O		4010-058-2321	NASUI01B10A9B	<80205>	...CHAIN ASSEMBLY,TROOP SEAT. INSTALLATION RPLS-- 1560-587-6298 ATTACHING PARTS		EA		1	*	*	*		*	117	72
			5305-770-2529	MS51959-11	<96906>	..SCREW,MACHINE.....		EA		1	*	*	*		*	117	73
						---*---											
P	O		1560-544-0931	S1650-61320-2	<78286>	.COVER,TROOP SEATS.....		EA		1	*	2	2		*	117	74
X2	O			S1650-61320-4	<78286>	.SPACER.....		EA		1						117	75
P	O		1680-536-8091	S1650-61319-2	<78286>	.PLATE,TROOP SEAT..... FURNISHINGS ATTACHING PARTS		EA		1	*	*	*		*	117	76
			5306-182-2061	AN3H10A	<88044>	.BOLT,MACHINE.....		HD		2	*	*	*		*	117	77
						---*---											

(1) SOURCE, MAINT AND REC CODE (a) SOURCE CODE	(b) MAINT LEVEL	(c) HLC CODE	(2) FEDERAL STOCK NUMBER	REFERENCE NUMBER		(3) DESCRIPTION	MODELS USABLE ON CH-34C	(4) UNIT OF ISSUE	(5) QTY INC IN UNIT PACK	(6) QTY INC IN UNIT	(7) 30-DAY DS GS MAINT ALW (a) 1-20	(b) 21-50	(c) 51-100	(8) 1-YR ALW PER 100 EQUIP CNTGCY	(9) DEPOT MAINT ALW PER 100 EQUIP	(10) ILLUSTRATION (a) FIG NO	(b) ITEM NO
P	O		1560-544-0914	S1650-61304	<78286>	.FITTING,SUPPORT,SEAT..... ATTACHING PARTS		EA		1	*	*	*		REF	117	78
			5306-182-2060	AN3H7A	<88044>	.BOLT,FLAT.....		HD		4	*	*	*		*	117	79
			5310-183-4406	AN960PD10	<88044>	.WASHER,FLAT..... ---*---		HD		4	*	*	*		*	117	
P	O		1560-544-0915	S1650-61305	<78286>	.FITTING,SUPPORT SEAT..... ATTACHING PARTS		EA		1	*	REF	REF		REF	117	80
			5306-182-2016	AN4H5A	<88044>	.BOLT,MACHINE.....		HD		4	*	*	*		*	117	81
			5310-187-2354	AN960PD416	<88044>	.WASHER,FLAT..... ---*---		HD		4	*	*	*		*	117	
P	O		1680-536-7546	S1650-61306	<78286>	.FITTING,TROOP SEAT RPLS--.. 1560-626-7243 ATTACHING PARTS		EA		1	*	*	*		REF	117	82
			5306-182-2060	AN3H7A	<88044>	.BOLT,MACHINE.....		HD		4	*	*	*		*	117	83
			5310-183-4406	AN960PD10	<88044>	.WASHER,FLAT..... ---*---		HD		4	*	*	*		*	117	
P	O		1560-544-0914	S1650-61304	<78286>	.FITTING,SUPPORT,SEAT..... ATTACHING PARTS		EA		1	*	*	*		REF	117	84
			5306-182-2060	AN3H7A	<88044>	.BOLT,MACHINE.....		HD		4	*	*	*		*	117	85
			5310-183-4406	AN960PD10	<88044>	.WASHER,FLAT..... ---*---		HD		4	*	*	*		*	117	
MF	F			S1650-61315	<78286>	.TUBE..... MAKEFR AR 4710-278-6365 AL ALLY SH		EA		1						117	86
P	O		1680-825-8489	ACA1143-52	<76912>	.SEAT,AIRCRAFT..... RPLS-- 1680-033-5479, 1680-516-6813, 1680-600-6813,& 1680-612-1556		EA		1	*	REF	REF	REF	REF	117	87
AO	O			S1650-61333	<78286>	.FITTING,TROOP SEAT SUPPORT.. ATTACHING PARTS		EA		3						117	88
			5306-182-2059	AN3H6A	<88044>	.BOLT,MACHINE.....		HD		4	*	*	*		*	117	89
			5310-183-4406	AN960PD10	<88044>	.WASHER,FLAT..... ---*---		HD		4	*	*	*		*	117	
P	O		5340-544-0917	S1650-61332	<78286>	..CATCH.....		EA		2	REF	REF	REF		REF	117	90
P	O		1560-546-1136	S1650-61301	<78286>	..FITTING,TROOP SEAT..... SUPPORT,UPPER		EA		1	*	REF	REF		REF	117	91
			5315-812-3764	MS20392-2C41	<96906>	.PIN,STRAIGHT,HEADED.....		EA		1	*	*	*		*	117	94
			5315-234-1856	MS24665-155	<96906>	.PIN,COTTER.....		HD		1	*	*	*		*	117	95
X2	O		1680-775-6541	S1650-61314-1	<78286>	.TUBE..... ATTACHING PARTS		EA		1	*	*	*		*	117	96
			5306-182-1964	AN4H16A	<88044>	.BOLT,MACHINE.....		HD		1	*	*	*		*	117	97
			5310-187-2354	AN960PD416	<88044>	.WASHER,FLAT.....		HD		2	*	*	*		*	117	
			5310-877-5796	MS21044N4	<96906>	.NUT,SELF-LOCKING,HEXAGON....		EA		1	*	*	*		*	117	
			5306-182-1966	AN4H20A	<88044>	.BOLT,MACHINE.....		HD		1	*	*	*		*	117	98
			5310-187-2354	AN960PD416	<88044>	.WASHER,FLAT.....		HD		2	*	*	*		*	117	
			5310-877-5796	MS21044N4	<96906>	.NUT,SELF-LOCKING,HEXAGON.... ---*---		EA		1	*	*	*		*	117	
P	O		1560-524-2647	S1650-61327	<78286>	.FITTING,TROOP SEAT..... INSTALLATION ATTACHING PARTS		EA		1	*	*	*		*	117	99
			5306-182-2058	AN3H5A	<88044>	.BOLT,MACHINE.....		EA		4	*	*	*		*	117	100

(1) SOURCE, MAINT AND REC CODE (a) SOURCE CODE	(b) MAINT LEVEL	(c) REC CODE	(2) FEDERAL STOCK NUMBER	REFERENCE NUMBER		(3) DESCRIPTION	MODELS USABLE ON CH-34C	(4) UNIT OF ISSUE	(5) QTY INC IN UNIT PACK	(6) QTY INC IN UNIT	(7) 30-DAY DS/GS MAINT ALW (a) 1-20	(b) 21-50	(c) 51-100	(8) 1-YR ALW PER 100 EQUIP CNTGCY	(9) DEPOT MAINT ALW PER 100 EQUIP	(10) ILLUSTRATION (a) FIG NO	(b) ITEM NO
			5310-183-4406	AN960PD10	<88044>	.WASHER,FLAT.....		HD		4	*	*	*		*	117	
						---*---											
P	O		1560-544-0915	S1650-61305	<78286>	.FITTING,SUPPORT SEAT.....		EA		1	*	REF	REF		REF	117	101
						ATTACHING PARTS											
			5306-182-2016	AN4H5A	<88044>	.BOLT,MACHINE.....		HD		4	*	*	*		*	117	102
			5310-187-2354	AN960PD416	<88044>	.WASHER,FLAT.....		HD		4	*	*	*		*	117	
						---*---											
P	O		1560-544-0914	S1650-61304	<78286>	.FITTING,SUPPORT,SEAT.....		EA		1	*	*	*		REF	117	103
						ATTACHING PARTS											
			5306-182-2060	AN3H7A	<88044>	.BOLT,MACHINE.....		HD		4	*	*	*		*	117	
			5310-183-4406	AN960PD10	<88044>	.WASHER,FLAT.....		HD		4	*	*	*		*	117	104
						---*---											
			5306-182-1965	AN4H17A	<88044>	.BOLT,MACHINE.....		HD		1	*	*	*		*	117	106
			5310-187-2354	AN960PD416	<88044>	.WASHER,FLAT.....		HD		2	*	*	*		*	117	
			5310-877-5796	MS21044N4	<96906>	.NUT,SELF-LOCKING,HEXAGON....		EA		1	*	*	*		*	117	
						---*---											
X2	O		1680-775-6541	S1650-61314-1	<78286>	..TUBE.....		EA		1	*	*	*		*	117	
X2	F			S1650-61337	<78286>	.FITTING.....		EA		1						117	108
						ATTACHING PARTS											
			5306-182-2058	AN3H5A	<88044>	.BOLT,MACHINE.....		EA		1	*	*	*		*	117	109
			5310-183-4406	AN960PD10	<88044>	.WASHER,FLAT.....		HD		2	*	*	*		*	117	
			5310-877-5797	MS21044N3	<96906>	.NUT,SELF-LOCKING,HEXAGON....		EA		1	*	*	*		*	117	
			5306-182-2060	AN3H7A	<88044>	.BOLT,MACHINE.....		HD		1	*	*	*		*	117	110
			5310-183-4406	AN960PD10	<88044>	.WASHER,FLAT.....		HD		2	*	*	*		*	117	
			5310-877-5797	MS21044N3	<96906>	.NUT,SELF-LOCKING,HEXAGON....		EA		1	*	*	*		*	117	
			5305-702-0609	MS24694S50	<96906>	.SCREW,MACHINE.....		HD		1	*	*	*		*	117	111
			5310-183-4406	AN960PD10	<88044>	.WASHER,FLAT.....		HD		2	*	*	*		*	117	
			5310-877-5797	MS21044N3	<96906>	.NUT,SELF-LOCKING,HEXAGON....		EA		1	*	*	*		*	117	
						---*---											
P	O		1680-544-0951	S1650-61303-1	<78286>	.FITTING,TROOP SEAT.....		EA		1	*	*	*		REF	117	112
						ATTACHING PARTS											
			5306-182-2059	AN3H6A	<88044>	.BOLT,MACHINE.....		HD		4	*	*	*		*	117	113
			5310-183-4406	AN960PD10	<88044>	.WASHER,FLAT.....		HD		4	*	*	*		*	117	
						---*---											
				S1650-61360	<78286>	TROOP SEAT INSTALLATION..... USBL EFF 56-4313 AND SUBSEQUENT SEE FIG.115 FOR NHA										118	
			1680-087-0296	9004	<70133>	.BELT,AIRCRAFT SAFTY..... RPL-BY 1680-447-9504										118	
P	O		1680-447-9504	56E589	<99238>	.BELT,AIRCRAFT,SAFETY LAP.... TROOP RPLS-- 1680-087-0296		EA		18					REF	118	1
P	O		1680-546-1137	S1650-61307	<78286>	.FITTING,TROOP SEAT..... INSTALLATION ATTACHING PARTS		EA		1	*	*	*		REF	118	2

(1) SOURCE, MAINT AND REC CODE (a) SOURCE CODE	(b) MAINT LEVEL	(c) REC CODE	(2) FEDERAL STOCK NUMBER	(3) DESCRIPTION REFERENCE NUMBER			MODELS USABLE ON CH-34C	(4) UNIT OF ISSUE	(5) QTY INC IN UNIT PACK	(6) QTY INC IN UNIT	(7) 30-DAY DS/GS MAINT ALW (a) 1-20	(b) 21-50	(c) 51-100	(8) 1-YR ALW PER 100 EQUIP CNTGCY	(9) DEPOT MAINT ALW PER 100 EQUIP	(10) ILLUSTRATION (a) FIG NO	(b) ITEM NO
			5306-182-2058	AN3H5A	<88044>	.BOLT,MACHINE.....		EA		4	*	*	*		*	118	3
			5310-183-4406	AN960PD10	<88044>	.WASHER,FLAT.....		HD		4	*	*	*		*	118	
			5310-877-5797	MS21044N3	<96906>	.NUT,SELF-LOCKING,HEXAGON....		EA		4	*	*	*		*	118	
						---*---											
			5306-182-1964	AN4H16A	<88044>	.BOLT,MACHINE.....		HD		1	*	*	*		*	118	4
			5310-187-2354	AN960PD416	<88044>	.WASHER,FLAT.....		HD		2	*	*	*		*	118	
			5310-877-5796	MS21044N4	<96906>	.NUT,SELF-LOCKING,HEXAGON....		EA		1	*	*	*		*	118	
			5306-182-1965	AN4H17A	<88044>	.BOLT,MACHINE.....		HD		3	*	*	*		*	118	5
			5310-187-2354	AN960PD416	<88044>	.WASHER,FLAT.....		HD		6	*	*	*		*	118	
			5310-877-5796	MS21044N4	<96906>	.NUT,SELF-LOCKING,HEXAGON....		EA		3	*	*	*		*	118	
P	O		1680-701-4734	S1650-61309	<78286>	.TUBE,TROOP SEAT INSTALLATION		EA		1	*	*	REF		REF	118	6
P	O		1560-544-0915	S1650-61305	<78286>	.FITTING,SUPPORT SEAT.....		EA		1	*	REF	REF		REF	118	7
						ATTACHING PARTS											
			5306-182-2016	AN4H5A	<88044>	.BOLT,MACHINE.....		HD		4	*	*	*		*	118	8
			5310-187-2354	AN960PD416	<88044>	.WASHER,FLAT.....		HD		4	*	*	*		*	118	
						---*---											
P	O		1680-544-0951	S1650-61303-1	<78286>	.FITTING,TROOP SEAT.....		EA		2	*	*	*		REF	118	9
						ATTACHING PARTS											
			5306-182-2059	AN3H6A	<88044>	.BOLT,MACHINE.....		HD		4	*	*	*		*	118	10
			5310-183-4406	AN960PD10	<88044>	.WASHER,FLAT.....		HD		4	*	*	*		*	118	
						---*---											
AO	O			S1650-61334	<78286>	.FITTING ASSEMBLY.....		EA		1						118	11
						ATTACHING PARTS											
			5306-182-2059	AN3H6A	<88044>	.BOLT,MACHINE.....		HD		4	*	*	*		*	118	12
			5310-183-4406	AN960PD10	<88044>	.WASHER,FLAT.....		HD		4	*	*	*		*	118	
						---*---											
P	O		5340-544-0917	S1650-61332	<78286>	..CATCH.....		EA		2	REF	REF	REF		REF	118	13
P	O		1560-546-1136	S1650-61301	<78286>	..FITTING,TROOP SEAT.....		EA		1	*	REF	REF		REF	118	14
						SUPPORT,UPPER											
P	O		1680-673-5490	S1650-61383-11	<78286>	.FITTING ASSEMBLY,TROOP.....		EA		1	*	*	*		*	118	15
						SEAT RPLS-- 1680-591-6848											
						ATTACHING PARTS											
			5306-182-2058	AN3H5A	<88044>	.BOLT,MACHINE.....		EA		4	*	*	*		*	118	16
			5310-183-4406	AN960PD10	<88044>	.WASHER,FLAT.....		HD		4	*	*	*		*	118	
			5310-877-5797	MS21044N3	<96906>	.NUT,SELF-LOCKING,HEXAGON....		EA		4	*	*	*		*	118	
						---*---											
			5306-182-1964	AN4H16A	<88044>	.BOLT,MACHINE.....		HD		1	*	*	*		*	118	17
			5310-187-2354	AN960PD416	<88044>	.WASHER,FLAT.....		HD		2	*	*	*		*	118	
			5310-877-5797	MS21044N3	<96906>	.NUT,SELF-LOCKING,HEXAGON....		EA		1	*	*	*		*	118	
P	O		1560-544-0915	S1650-61305	<78286>	.FITTING,SUPPORT,SEAT.....		EA		1	*	REF	REF		REF	118	18
						ATTACHING PARTS											
			5306-182-2016	AN4H5A	<88044>	.BOLT,MACHINE.....		HD		4	*	*	*		*	118	19
			5310-187-2354	AN960PD416	<88044>	.WASHER,FLAT.....		HD		4	*	*	*		*	118	
						---*---											
AO	O			S1650-61333	<78286>	.FITTING,TROOP SEAT SUPPORT..		EA		2						118	20
						ATTACHING PARTS											
			5306-182-2059	AN3H6A	<88044>	.BOLT,MACHINE.....		HD		4	*	*	*		*	118	21
			5310-183-4406	AN960PD10	<88044>	.WASHER,FLAT.....		HD		4	*	*	*		*	118	
						---*---											
P	O		5340-544-0917	S1650-61332	<78286>	..CATCH.....		EA		2	REF	REF	REF		REF	118	22
P	O		1680-544-0952	S1650-61303-2	<78286>	..FITTING,TROOP SEAT SUPPORT.		EA		1	*	*	2		*	118	23
X2	O		1560-992-0538	S1650-61385	<78286>	.TUBE.....		EA		1	*	*	*		*	118	24

(1) SOURCE, MAINT AND REC CODE (a) SOURCE CODE	(b) MAINT LEVEL	(c) REC CODE	(2) FEDERAL STOCK NUMBER	REFERENCE NUMBER	(3) DESCRIPTION	MODELS USABLE ON CH-34C	(4) UNIT OF ISSUE	(5) QTY INC IN UNIT PACK	(6) QTY INC IN UNIT	(7) 30-DAY DS/GS MAINT ALW (a) 1-20	(b) 21-50	(c) 51-100	(8) 1-YR ALW PER 100 EQUIP CNTGCY	(9) DEPOT MAINT ALW PER 100 EQUIP	(10) ILLUSTRATION (a) FIG NO	(b) ITEM NO
P	O		1560-328-5012	S1550-61333	<78286> ..STRAP ASSEMBLY,TROOP SEAT..		EA		5	*	2	2		*	118	
			5305-984-4988	MS35206-228	<96906> .SCREW,MACHINE.....				1	*	*	*		*	118	25
			5310-187-2398	AN960PD6L	<88044> .WASHER,FLAT.....		HD		1	*	*	*		*	118	
			5310-905-8451	S21083N06	<96906> .NUT,SELF-LOCKING,HEXAGON....		HD		1	*	*	*		*	118	
			1560-587-6298	S1650-61321	<78286> .CHAIN ASSEMBLY,TROOP SEAT... INSTALLATION RPL-BY 4010-058-2321		EA		1						118	
P	O		4010-058-2321	NAS1201B10A9B	<80205> .CHAIN ASSEMBLY,TROOP SEAT... INSTALLATION RPLS-- 1560-587-6298 ATTACHING PARTS		EA		1	*	*	*		*	118	26
			5305-770-2529	MS51959-11	<96906> .SCREW MACHINE.....		EA		1	*	*	*		*	118	
					---*---											
P	O		5340-702-4915	MS17985C413	<96906> .PIN,QUICK RELEASE.....		EA		1	*	*	*		*	118	27
P	O		1560-626-7292	S1650-61380	<78286> .FITTING ASSEMBLY..... ATTACHING PARTS		EA		1	*	*	*		*	118	28
			5306-182-2058	AN3H5A	<88044> .BOLT,MACHINE.....		EA		4	*	*	*		*	118	29
			5310-183-4406	AN960PD10	<88044> .WASHER,FLAT.....		HD		4	*	*	*		*	118	
					---*---											
			5305-984-4988	MS35206-228	<96906> .SCREW,MACHINE.....				5	*	*	*		*	118	30
			5310-187-2398	AN960PD6L	<88044> .WASHER,FLAT.....		HD		5	*	*	*		*	118	
			5310-905-8451	MS21083N06	<96906> .NUT,SELF-LOCKING,HEXAGON....		HD		5	*	*	*		*	118	
			1560-587-6298	S1650-61321	<78286> .CHAIN ASSEMBLY,TROOP SEAT... INSTALLATION RPL-BY 4010-058-2321		EA		5						118	
P	O		4010-058-2321	NAS1201B10A9B	<80205> .CHAIN ASSEMBLY,TROOP SEAT... INSTALLATION RPLS-- 1560-587-6298 ATTACHING PARTS		EA		1	*	*	*		*	118	31
			5305-770-2529	MS51959-11	<96906> .SCREW MACHINE.....		EA		1	*	*	*		*	118	
					---*---											
P	O		5340-888-7376	B414RD	<07059> .PIN..... 5340-226-4960		EA		5						118	32
P	O		5340-226-4960	NAS1354DS7S14D	<80205> .PIN,QUICK RELEASE..... RPLS-- 5340-888-7376		EA		1	*	*	*		*	118	32
P	O		1560-546-1138	S1650-61325	<78286> .FITTING,TROOP SEAT..... INSTALLATION ATTACHING PARTS		EA		5	*	REF	REF		REF	118	33
			5306-182-2060	AN3H7A	<88044> .BOLT,MACHINE.....		HD		4	*	*	*		*	118	34
			5310-183-4406	AN960PD10	<88044> .WASHER,FLAT.....		HD		4	*	*	*		*	118	
					---*---											
			5305-984-4988	MS35206-228	<96906> .SCREW,MACHINE.....				1	*	*	*		*	118	35
			5310-187-2398	AN960PD6L	<88044> .WASHER,FLAT.....		HD		2	*	*	*		*	118	
			5310-905-8451	MS21083N06	<96906> .NUT,SELF-LOCKING,HEXAGON....		HD		1	*	*	*		*	118	
			1560-587-6298	S1650-61321	<78286> .CHAIN ASSEMBLY,TROOP SEAT... INSTALLATION RPL-BY 4010-058-2321										118	
P	O		4010-058-2321	NAS1201B10A9B	<80205> .CHAIN ASSEMBLY,TROOP SEAT... INSTALLATION RPLS-- 1560-587-6298 ATTACHING PARTS		EA		1	*	*	*		*	118	36
			5305-770-2529	MS51959-11	<96906> .SCREW MACHINE.....		EA		1	*	*	*		*	118	

(1) SOURCE, MAINT AND REC CODE (a) SOURCE CODE	(b) MAINT LEVEL	(c) REC CODE	(2) FEDERAL STOCK NUMBER	REFERENCE NUMBER	(3) DESCRIPTION	MODELS USABLE ON CH-34C	(4) UNIT OF ISSUE	(5) QTY INC IN UNIT PACK	(6) QTY INC IN UNIT	(7) 30-DAY DS GS MAINT ALW (a) 1-20	(b) 21-50	(c) 51-100	(8) 1-YR ALW PER 100 EQUIP CNTGCY	(9) DEPOT MAINT ALW PER 100 EQUIP	(10) ILLUSTRATION (a) FIG NO	(b) ITEM NO
					CONTINUED										118	
					---*---											
P	O		5340-702-4915	MS17985C413 <96906>	.PIN,QUICK RELEASE.....		EA		1	*	*	*		*	118	37
P	O		1680-671-4952	S1650-61382-11 <78286>	.FITTING.....		EA		1	*	*	*		*	118	38
					ATTACHING PARTS											
			5306-182-2058	AN3H5A <88044>	.BOLT,MACHINE.....		EA		4	*	*	*		*	118	39
			5310-183-4406	AN960PD10 <88044>	.WASHER,FLAT.....		HD		4	*	*	*		*	118	
			5310-877-5797	MS21044N3 <96906>	.NUT,SELF-LOCKING,HEXAGON....		EA		4	*	*	*		*	118	
					---*---											
P	O	R	1680-671-5887	S1650-61390-1 <78286>	.SEAT ASSEMBLY.....		EA		1	*	*	*		*	118	40
X2	O			S1650-61390-1 <78286>	..LEG ASSEMBLY.....		EA		1						118	
					ATTACHING PARTS											
			5305-144-3828	AN520-10R26 <88044>	..SCREW.....		HD		1	*	*	*	*		118	
			5310-183-4406	AN960PD10 <88044>	..WASHER FLAT.....		HD		1	*	*	*		*	118	
			5310-275-1994	AN365-1032 <88044>	..NUT.....		HD		1	*	*	*		*	118	
			5310-167-0809	AN960C1216 <88044>	..WASHER.....		HD		1	*	*	*		*	118	
			5315-236-8359	MS24665-370 <96906>	..COTTER PIN.....		HD		1	*	*	*		*	118	
					---*---											
P	O		5306-515-7310	ACA2128 <76912>	..BOLT,RING.....		EA		10	REF	REF	REF	REF	REF	118	41
					ATTACHING PARTS											
P	O		5310-567-0256	S1650-61328 <78286>	..WASHER,SADDLE.....		EA		2	REF	REF	REF		REF	118	42
			5310-187-2354	AN960PD416 <88044>	..WASHER,FLAT.....		HD		1	*	*	*		*	118	43
			5310-877-5796	MS21044N4 <96906>	..NUT,SELF-LOCKING,HEXAGON...		EA		1	*	*	*		*	118	44
					---*---											
X2	F			S1650-61398-1 <78286>	..TUBE.....		EA		1						118	45
P	O		1680-626-7345	S1650-61379-1 <78286>	..SEAT COVER AND BACK.....		EA		1	*	2	2		*	118	46
					ASSEMBLY											
P	O		1680-626-7346	S1650-61379-7 <78286>	...BACK ASSEMBLY.....		EA		8	2	5	9		*	118	47
P	O		1680-691-2188	S1650-61379-21 <78286>	...BACK ASSEMBLY.....		EA		1	*	*	*		*	118	48
P	O		1680-626-7347	S1650-61336-1 <78286>	..SEAT CUSHION.....		EA		1	*	*	*		*	118	49
P	O		1560-675-5802	S1650-61317-1 <78286>	.SUPPORT,DIAGONAL RPLS--....		EA		1	*	*	*		REF	118	50
					1560-701-5707											
P	O		1560-823-5986	S1650-61387-3 <78286>	..TUBE ASSEMBLY.....		EA		1	*	REF	REF		REF	118	51
			5340-985-0743	NAS1354DS7S08D <80205>	...PIN,QUICK RELEASE.....		EA		1	*	*	*		*	118	52
MO	O			S1650-61321 <78286>	...CHAIN ASSEMBLY,TROOP.....				1						118	53
					SEAT INSTALLATION											
					RPL-BY 4010-058-2321											
P	O		4010-058-2321	NAS1201B10A9B <80205>	.CHAIN ASSEMBLY,TROOP SEAT...		EA		1	*	*	*		*	118	53
					INSTALLATION											
					RPLS-- 1560-587-6298											
					ATTACHING PARTS											
			5305-770-2529	MS51959-11 <96906>	...SCREW,MACHINE.....		EA		1	*	*	*		*	118	54
					---*---											
				S1650-61388-1 <78286>	...FITTING.....		EA		1						118	55
					ATTACHING PARTS											
P	O		1560-544-0932	S1650-61320-3 <78286>	..COVER,TROOP SEATS.....		EA		1	*	*	*		REF	118	57
				S1650-61320-4 <78286>	..SPACER.....		EA		1						118	58
P	O		1680-570-4895	S1650-61319-1 <78286>	..PLATE,TROOP SEAT.....		EA		1	*	*	REF		REF	118	59
					FURNISHINGS											
					ATTACHING PARTS											
			5306-182-2061	AN3H10A <88044>	..BOLT,MACHINE.....		HD		2	*	*	*		*	118	60
					---*---											

(1) SOURCE, MAINT AND REC CODE (a) SOURCE CODE	(b) MAINT LEVEL	(c) REC CODE	(2) FEDERAL STOCK NUMBER	REFERENCE NUMBER	(3) DESCRIPTION	MODELS USABLE ON CH-34C	(4) UNIT OF ISSUE	(5) QTY INC IN UNIT PACK	(6) QTY INC IN UNIT	(7) 30-DAY DS/GS MAINT ALW (a) 1-20	(b) 21-50	(c) 51-100	(8) 1-YR ALW PER 100 EQUIP CNTGCY	(9) DEPOT MAINT ALW PER 100 EQUIP	(10) ILLUSTRATION (a) FIG NO	(b) ITEM NO
P	O		5340-797-8615	688	<92026> .CLIP,SPRING.....		EA		6	2	3	5		*	118	
					ATTACHING PARTS											
			5305-576-7810	AN525D10R10	<88044> .SCREW,MACHING.....		EA		6	*	*	*		*	118	
			5310-877-5798	MS21044D3	<96906> .NUT,SELF-LOCKING,HEXAGON....		EA		6	*	*	*		*	118	
					---*---											
P	O		1560-823-5986	S1650-61387-3	<78286> ..TUBE ASSEMBLY.....		EA		1	*	REF	REF		REF	118	61
			5340-985-0743	NAS1354DS7S08D	<80205> ...PIN,QUICK RELEASE.....		EA		1	*	*	*		*	118	62
			1560-587-6298	S1650-61321	<78286> ...CHAIN ASSEMBLY,TROOP.....		EA		1					REF	118	
					SEAT INSTALLATION											
					RPL-BY 4010-058-2321											
P	O		4010-058-2321	NAS1201B10A9B	<80205> ...CHAIN ASSEMBLY,TROOP SEAT.		EA		1	*	*	*		*	118	63
					INSTALLATION											
					RPLS-- 1560-587-6298											
					ATTACHING PARTS											
			5305-770-2529	MS51959-11	<96906> ...SCREW,MACHINE.....		EA		1	*	*	*		*	118	64
					---*---											
				S1650-61388	<78286> ...FITTING.....		EA		1						118	65
					ATTACHING PARTS											
P	O		1560-544-0930	S1650-61320-1	<78286> ..COVER,TROOP SEATS.....		EA		1	*	*	*		REF	118	67
X2	O			S1650-61320-4	<78286> ..SPACER.....		EA		1						118	68
P	O		1680-570-4895	S1650-61319-1	<78286> ..PLATE,TROOP SEAT.....		EA		1	*	*	REF		REF	118	69
					FURNISHINGS											
					ATTACHING PARTS											
			5306-182-2061	AN3H10A	<88044> ..BOLT,MACHINE.....		HD		2	*	*	*		*	118	70
					---*---											
			5306-182-1964	AN4H16A	<88044> ..BOLT,MACHINE.....		HD		1	*	*	*		*	118	71
			5310-187-2354	AN960PD416	<88044> .WASHER,FLAT.....		HD		2	*	*	*		*	118	
			5310-877-5796	MS21044N4	<96906> .NUT,SELF-LOCKING,HEXAGON....		EA		1	*	*	*		*	118	
			5306-182-1965	AN4H17A	<88044> .BOLT,MACHINE.....		HD		1	*	*	*		*	118	72
			5310-187-2354	AN960PD416	<88044> .WASHER,FLAT.....		HD		2	*	*	*		*	118	
			5310-877-5796	MS21044N4	<96906> .NUT,SELF-LOCKING,HEXAGON....		EA		1	*	*	*		*	118	
X2	F		1680-775-6541	S1650-61314-1	<78286> ..TUBE.....		EA		1	*	*	*		REF	118	
X2				S1650-61337	<78286> .FITTING.....		EA		1						118	74
					ATTACHING PARTS											
			5306-182-2058	AN3H5A	<88044> .BOLT,MACHINE.....		EA		2	*	*	*		*	118	75
			5310-183-4406	AN960PD10	<88044> .WASHER,FLAT.....		HD		4	*	*	*		*	118	
			5310-877-5797	MS21044N3	<96906> .NUT,SELF-LOCKING,HEXAGON....		EA		2	*	*	*		*	118	
			5306-182-2060	AN3H7A	<88044> .BOLT,MACHINE.....		HD		1	*	*	*		*	118	76
			5310-183-4406	AN960PD10	<88044> .WASHER,FLAT.....		HD		2	*	*	*		*	118	
			5310-877-5797	MS21044N3	<96906> .NUT,SELF-LOCKING,HEXAGON....		EA		1	*	*	*		*	118	
			5305-702-0609	MS24694S50	<96906> .SCREW,MACHINE.....		HD		1	*	*	*		*	118	77
			5310-183-4406	AN960PD10	<88044> .WASHER,FLAT.....		HD		1	*	*	*		*	118	
			5310-877-5797	MS21044N3	<96906> .NUT,SELF-LOCKING,HEXAGON....		EA		1	*	*	*		*	118	
					---*---											
P	O		1560-544-0915	S1650-61305	<78286> .FITTING,SUPPORT,SEAT.....		EA		1	*	REF	REF		REF	118	78
					ATTACHING PARTS											
			5306-182-2016	AN4H5A	<88044> .BOLT,MACHINE.....		HD		4	*	*	*		*	118	79
			5310-187-2354	AN960PD416	<88044> .WASHER,FLAT.....		HD		4	*	*	*		*	118	
					---*---											
P	O		1680-544-0951	S1650-61303-1	<78286> .FITTING,TROOP SEAT.....		EA		1	*	*	*		REF	118	80
					ATTACHING PARTS											
			5306-182-2059	AN3H6A	<88044> .BOLT,MACHINE.....		HD		4	*	*	*		*	118	81

(1) SOURCE, MAINT AND REC CODE (a) SOURCE CODE	(b) MAINT LEVEL	(c) RECOVERY CODE	(2) FEDERAL STOCK NUMBER	REFERENCE NUMBER		(3) DESCRIPTION	MODELS USABLE ON CH-34C	(4) UNIT OF ISSUE	(5) QTY INC IN UNIT PACK	(6) QTY INC IN UNIT	(7) 30 DAY DS GS MAINT ALW (a) 1-20	(b) 21-50	(c) 51-100	(8) 1-YR ALW PER 100 EQUIP CNTGCY	(9) DEPOT MAINT ALW PER 100 EQUIP	(10) ILLUSTRATION (a) FIG NO	(b) ITEM NO
			5310-183-4406	AN960PD10	<88044>	.WASHER,FLAT.....		HD		4	*	*	*		*	118	
						---*---											
P	O		1560-524-2647	S1650-61327	<78286>	.FITTING,TROOP SEAT.....		EA		1	*	*	*		REF	118	82
						INSTALLATION											
						ATTACHING PARTS											
			5306-182-2058	AN3H5A	<88044>	.BOLT,MACHINE.....		EA		4	*	*	*		*	118	83
			5310-183-4406	AN960PD10	<88044>	.WASHER,FLAT.....		HD		4	*	*	*		*	118	
						---*---											
			5305-984-4988	MS35206-228	<96906>	.SCREW,MACHINE.....				1	*	*	*		*	118	84
			5310-187-2398	AN960PD6L	<88044>	.WASHER,FLAT.....		HD		1	*	*	*		*	118	
			5310-905-8451	MS21083N06	<96906>	.NUT,SELF-LOCKING,HEXAGON....		HD		1	*	*	*		*	118	
			1560-587-6298	S1650-61321	<78286>	.CHAIN ASSEMBLY,TROOP SEAT...		EA		1						118	
						INSTALLATION RPL-BY											
						4010-058-2321											
P	O		4010-058-2321	NAS1201B10A9B	<80205>	.CHAIN ASSEMBLY,TROOP SEAT...		EA		1	*	*	*		*	118	
						INSTALLATION											
						RPLS-- 1560-587-6298											
						ATTACHING PARTS											
			5305-770-2529	MS51959-11	<96906>	.SCREW MACHINE.....		EA		1	*	*	*		*	118	
						---*---											
P	O		5340-888-7376	B414RD	<07059>	.PIN RPL-BY.....		EA		1						118	86
						5340-226-4960											
P	O		5340-226-4960	NAS1354DS7S14D	<80205>	.PIN,QUICK RELEASE.....		EA		1	*	*	*		*	118	86
						RPLS-- 5340-888-7376											
P	O		1560-546-1138	S1650-61325	<78286>	.FITTING,TROOP SEAT.....		EA		1	*	REF	REF		REF	118	87
						INSTALLATION											
						ATTACHING PARTS											
			5306-182-2060	AN3H7A	<88044>	.BOLT,MACHINE.....		HD		4	*	*	*		*	118	88
			5310-183-4406	AN960PD10	<88044>	.WASHER,FLAT.....		HD		4	*	*	*		*	118	
						---*---											
P	O	R	1680-629-9642	S1650-61390-2	<78286>	.TROOP SEAT ASSEMBLY.....		EA		1	*	2	2		*	118	89
P	O		5306-515-7310	ACA2128	<76912>	..BOLT,RING.....		EA		2	REF	REF	REF	REF	REF	118	90
						ATTACHING PARTS											
P	O		5310-567-0256	S1650-61328	<78286>	..WASHER,SADDLE.....		EA		2	REF	REF	REF		REF	118	91
			5310-187-2354	AN960PD416	<88044>	..WASHER,FLAT.....		HD		1	*	*	*		*	118	92
			5310-877-5796	MS21044N4	<96906>	..NUT,SELF-LOCKING,HEXAGON...		EA		1	*	*	*		*	118	93
						---*---											
X2	F		1680-922-5841	S1650-61398-3	<78286>	..TUBE,SUPPORT,TROOP.....		EA		1	*	*	*		*	118	94
AF	O			S1650-61379-3	<78286>	..COVER AND BACK ASSEMBLY....		AY		1						118	95
P	O		1680-626-7353	S1650-61379-6	<78286>	...COVER ASSEMBLY.....		EA		1	2	2	4		*	118	96
P	O		1680-626-7354	S1650-61379-9	<78286>	...BACK ASSEMBLY.....		EA		1	2	2	3		*	118	97
P	O		1680-315-5806	ACA1203	<76912>	...HOOK,STRAP WEBBING.....		EA		4	3	7	13		*	118	
P	O		1680-626-7348	S1650-61336-3	<78286>	..CUSHION,TROOP SEAT.....		EA		1	*	*	*		*	118	98
P	O		1560-805-4908	S1650-61361	<78286>	.STEP ASSEMBLY,TROOP SEAT....		EA		1	*	*	2		*	118	99
						USBL EFF 56-4313 AND											
						SUBSEQUENT SEE FIG.119											
						FOR BREAKDOWN											
				S1650-61375	<78286>	.LOCKING INSTALLATION,.....				1						118	
						SEAT-STEP											
			5306-182-2059	AN3H6A	<88044>	..BOLT,MACHINE.....		HD		4	*	*	*		*	118	100
			5310-167-0753	AN960PD10L	<88044>	..WASHER,FLAT.....		HD		2	*	*	*		*	118	
			5306-182-2062	AN3H11A	<88044>	..BOLT,MACHINE.....		HD		4	*	*	*		*	118	101

(1) SOURCE, MAINT AND REC CODE (a) SOURCE CODE	(b) MAINT LEVEL	(c) REC CODE	(2) FEDERAL STOCK NUMBER	REFERENCE NUMBER	(3) DESCRIPTION	MODELS USABLE ON CH-34C	(4) UNIT OF ISSUE	(5) QTY INC IN UNIT PACK	(6) QTY INC IN UNIT	(7) 30-DAY DS/GS MAINT ALW (a) 1-20	(b) 21-50	(c) 51-100	(8) 1-YR ALWPER 100 EQUIP CNTGCY	(9) DEPOT MAINT ALWPER 100 EQUIP	(10) ILLUSTRATION (a) FIG NO	(b) ITEM NO
			5310-167-0753	AN960PD10L <89044>	..WASHER,FLAT.....		HD		2	*	*	*		*	118	
P	O		1560-075-2540	S1650-61377-17 <78286>	..FITTING ASSEMBLY,WELD.....		EA		1	*	*	*		*	118	102
P	O		1680-795-0794	S1650-61377-16 <78286>	..BRACKET,TROOP SEAT.....		EA		1	*	*	*		*	118	102A
P	O		1560-633-6948	S1620-61020-27 <78286>	..SUPPORT ASSEMBLY,BOTTOM.... STRUCTURE		EA		2	*	*	*		*	118	103
X2	F			S1650-61376-2 <78286>	..FITTING.....		EA		1						118	
X2	F			S1650-61376-1 <78286>	..FITTING.....		EA		1						118	
P	O		5340-051-2394	MS17987-609 <96906>	.PIN,QUICK RELEASE.....		EA		1	*	*	*		*	118	104
			1560-587-6298	S1650-61321 <78286>	.CHAIN ASSEMBLY,TROOP SEAT... INSTALLATION RPL-BY 4010-058-2321		EA		1						118	
P	O		4010-058-2321	NAS1201B10A9B <80205>	.CHAIN ASSEMBLY,TROOP SEAT... INSTALLATION RPLS-- 1560-587-6298 ATTACHING PARTS		EA		1	*	*	*		*	118	105
			5305-984-4988	MS35206-228 <96906>	.SCREW,MACHINE.....				1	*	*	*	*	*	118	106
			5310-187-2398	AN960PD6L <88044>	.WASHER,FLAT.....		HD		1	*	*	*		*	118	
			5310-905-8451	MS21083N06 <96906>	.NUT,SELF-LOCKING,HEXAGON.... ---*---		HD		1	*	*	*		*	118	
P	O		1680-626-7344	S1650-61384-1 <78286>	.HINGE FITTING ASSEMBLY..... ATTACHING PARTS		EA		1	*	*	2		*	118	107
			5306-182-2007	AN3H16A <88044>	.BOLT,MACHINE.....		HD		2	*	*	*		*	118	108
			5310-183-4406	AN960PD10 <88044>	.WASHER,FLAT.....		HD		2	*	*	*		*	118	
P	O		5306-963-1129	M4DS420-14C <02615>	.BOLT.....		EA		4	*	*	*		*	118	109
			5310-187-2354	AN960PD416 <88044>	.WASHER,FLAT.....		HD		4	*	*	*		*	118	110
P	O		5340-664-7382	38-13244Z <16954>	.SPRING,HELICAL,COMPRESSION..		EA		1	*	*	*		REF	118	112
			1560-587-6298	S1650-61321 <78286>	.CHAIN ASSEMBLY,TROOP SEAT... INSTALLATION RPL-BY 4010-058-2321		EA		1						118	
P	O		4010-058-2321	NAS1201B10A9B <80205>	.CHAIN ASSEMBLY,TROOP SEAT... INSTALLATION RPLS-- 1560-587-6298 ATTACHING PARTS		EA		1	*	*	*		*	118	113
			5305-984-4988	MS35206-228 <96906>	.SCREW,MACHINE.....				1	*	*	*		*	118	114
			5310-187-2398	AN960PD6L <88044>	.WASHER,FLAT.....		HD		1	*	*	*		*	118	
			5310-905-8451	MS21083N06 <96906>	.NUT,SELF-LOCKING,HEXAGON.... ---*---		HD		1	*	*	*		*	118	
P	O		1560-626-7259	S1650-61384-2 <78286>	.HINGE FITTING ASSEMBLY..... ATTACHING PARTS		EA		1	*	*	*		*	118	115
			5306-182-2007	AN3H16A <88044>	.BOLT,MACHINE.....		HD		2	*	*	*		*	118	116
			5310-183-4406	AN960PD10 <88044>	.WASHER,FLAT.....		HD		2	*	*	*		*	118	
P	O		5306-963-1129	M4DS420-14C <02615>	.BOLT.....		EA		4	*	*	*		REF	118	117
			5310-187-2354	AN960PD416 <88044>	.WASHER,FLAT..... ---*---		HD		4	*	*	*		*	118	118
AO	O			S1650-61333 <78286>	.FITTING,TROOP SEAT SUPPORT.. ATTACHING PARTS		EA		3						118	120
			5306-182-2059	AN3H6A <88044>	.BOLT,MACHINE.....		HD		4	*	*	*		*	118	121
			5310-183-4406	AN960PD10 <88044>	.WASHER,FLAT..... ---*---		HD		4	*	*	*		*	118	
P	O		5340-544-0917	S1650-61332 <78286>	..CATCH.....		EA		2	REF	REF	REF		REF	118	122
P	O		1680-544-0952	S1650-61303-2 <78286>	..FITTING,TROOP SEAT SUPPORT.		EA		1	*	*	REF		REF	118	123
			5306-182-1964	AN4H16A <88044>	.BOLT,MACHINE.....		HD		1	*	*	*		*	118	124

(1) SOURCE, MAINT AND REC CODE (a) SOURCE CODE	(b) MAINT LEVEL	(c) REC CODE	(2) FEDERAL STOCK NUMBER	REFERENCE NUMBER	(3) DESCRIPTION	MODELS USABLE ON CH-34C	(4) UNIT OF ISSUE	(5) QTY INC IN UNIT PACK	(6) QTY INC IN UNIT	(7) 30-DAY DS GS MAINT ALW (a) 1-20	(b) 21-50	(c) 51-100	(8) 1-YR ALW PER 100 EQUIP CNTGCY	(9) DEPOT MAINT ALW PER 100 EQUIP	(10) ILLUSTRATION (a) FIG NO	(b) ITEM NO
			5310-187-2354	AN960PD416	<88044> .WASHER,FLAT.....		HD		1	*	*	*		*	118	
			5310-877-5796	MS21044N4	<96906> .NUT,SELF-LOCKING,HEXAGON....		EA		1	*	*	*		*	118	
P	O		1560-544-0915	S1650-61305	<78286> .FITTING,SUPPORT,SEAT.....		EA		1	*	REF	REF		REF	118	125
					ATTACHING PARTS											
			5306-182-2016	AN4H5A	<88044> .BOLT,MACHINE.....		HD		4	*	*	*		*	118	126
			5310-187-2354	AN960PD416	<88044> .WASHER,FLAT.....		HD		4	*	*	*		*	118	
					---*---											
MF	F			S1650-61386	<78286> .TUBE,UPPER.....		EA		1						118	127
					MAKEFR											
					AR 4710-027-0901 TUBE											
			1680-626-7343	S1650-61383-2	<78286> .FITTING ASSEMBLY,TROOP.....										118	
					SEAT RPL-BY 1680-673-5489											
P	F		1680-673-5489	S1650-61383-12	<78286> .FITTING ASSEMBLY,TROOP.....		EA		1	*	*	*		*	118	128
					SEAT RPLS-- 1680-626-7343											
					ATTACHING PARTS											
			5306-182-2058	AN3H5A	<88044> .BOLT,MACHINE.....		EA		4	*	*	*		*	118	129
			5310-183-4406	AN960PD10	<88044> .WASHER,FLAT.....		HD		8	*	*	*		*	118	
			5310-877-5797	MS21044N3	<96906> .NUT,SELF-LOCKING,HEXAGON....		EA		4	*	*	*		*	118	
					---*---											
			5305-984-4988	MS35206-228	<96906> .SCREW,MACHINE.....				3	*	*	*		*	118	130
			5310-187-2398	AN960PD6L	<88044> .WASHER,FLAT.....		HD		3	*	*	*		*	118	
			5310-905-8451	MS21083N06	<96906> .NUT,SELF-LOCKING,HEXAGON....		HD		3	*	*	*		*	118	
			1560-587-6298	S1650-61321	<78286> .CHAIN ASSEMBLY,TROOP SEAT...		EA		3						118	
					INSTALLATION											
					RPL-BY 4010-058-2321											
P	O		4010-058-2321	NAS1201B10A9B	<80205> .CHAIN ASSEMBLY,TROOP SEAT...		EA		1	*	*	*		*	118	131
					INSTALLATION											
					RPLS-- 1560-587-6298											
P	O		5340-888-7376	B414RD	<07059> .PIN RPL-BY.....										118	132
					5340-226-4960											
			5340-226-4960	NAS1354DS7S14D	<80205> .PIN QUICK RELEASE.....		EA		1	*	*	*		*	118	132
					RPLS-- 5340-888-7376											
P	O		1560-546-1138	S1650-61325	<78286> .FITTING,TROOP SEAT.....		EA		3	*	REF	REF		REF	118	133
					INSTALLATION											
					ATTACHING PARTS											
			5306-182-2060	AN3H7A	<88044> .BOLT,MACHINE.....		HD		4	*	*	*		*	118	134
			5310-183-4406	AN960PD10	<88044> .WASHER,FLAT.....		HD		4	*	*	*		*	118	
					---*---											
			5305-984-4988	MS35206-228	<96906> .SCREW,MACHINE.....				1	*	*	*		*	118	135
			5310-187-2398	AN960PD6L	<88044> .WASHER,FLAT.....		HD		1	*	*	*		*	118	
			5310-905-8451	MS21083N06	<96906> .NUT,SELF-LOCKING,HEXAGON....		HD		1	*	*	*		*	118	
				S1650-61321	<78286> .CHAIN ASSEMBLY,TROOP SEAT...		EA		1						118	136
					INSTALLATION											
					RPL-BY 4010-058-2321											
P	O		4010-058-2321	NAS1201B10A9B	<80205> .CHAIN ASSEMBLY,TROOP SEAT...		EA		1	*	*	*		*	118	136
					INSTALLATION											
					RPLS-- 1560-587-6298											
			5340-702-4915	MS17985C413	<96906> .PIN,QUICK RELEASE.....		EA		1	*	*	*		*	118	137
P	O		1560-626-7294	S1650-61382-2	<78286> .FITTING ASSEMBLY.....		EA		1	*	*	*		REF	118	138
					ATTACHING PARTS											
			5306-182-2058	AN3H5A	<88044> .BOLT,MACHINE.....		EA		4	*	*	*		*	118	139
			5310-183-4406	AN960PD10	<88044> .WASHER,FLAT.....		HD		4	*	*	*		*	118	

(1) SOURCE, MAINT AND REC CODE (a) SOURCE CODE	(b) MAINT LEVEL	(c) REC CODE	(2) FEDERAL STOCK NUMBER	REFERENCE NUMBER		(3) DESCRIPTION	MODELS USABLE ON CH-34C	(4) UNIT OF ISSUE	(5) QTY INC IN UNIT PACK	(6) QTY INC IN UNIT	(7) 30-DAY DS GS MAINT ALW (a) 1-20	(b) 21-50	(c) 51-100	(8) 1-YR ALW PER 100 EQUIP CNTGCY	(9) DEPOT MAINT ALW PER 100 EQUIP	(10) ILLUSTRATION (a) FIG NO	(b) ITEM NO
			5310-877-5797	MS21044N3	<96906>	.NUT,SELF-LOCKING,HEXAGON.... ---*---		EA		4	*	*	*		*	118	
P	O		1680-629-9643	S1650-61390-3	<78286>	.TROOP SEAT ASSEMBLY.....		EA		1	*	2	2		*	118	140
P	O		5306-515-7310	ACA2128	<76912>	..BOLT,RING..... ATTACHING PARTS		EA		1	REF	REF	REF	REF	REF	118	141
P	O		5310-567-0256	S1650-61328	<78286>	..WASHER,SADDLE.....		EA		2	REF	REF	REF		REF	118	142
			5310-187-2354	AN960PD416	<88044>	..WASHER,FLAT.....		HD		1	*	*	*		*	118	143
			5310-877-5796	MS21044N4	<96906>	..NUT,SELF-LOCKING,HEXAGON... ---*---		EA		1	*	*	*		*	118	144
X2	O			S1650-61387-4	<78286>	..TUBE ASSEMBLY.....		EA		1						118	
X2	O			S1650-61398-2	<78286>	..TUBE.....		EA		1						118	145
AF	O			S1650-61379-2	<78286>	..SEAT COVER AND BACK..... ASSEMBLY		EA		1						118	146
P	O		1680-626-7349	S1650-61379-5	<78286>	...COVER ASSEMBLY.....		EA		1	2	2	3		*	118	147
P	O		1680-626-7346	S1650-61379-7	<78286>	...BACK ASSEMBLY.....		EA		3	REF	REF	REF		REF	118	148
P	O		1680-626-7351	S1650-61379-8	<78286>	...BACK ASSEMBLY,TROOP SEAT..		EA		1	*	*	2		*	118	149
P	O		1680-672-7396	S1650-61336-5	<78286>	..SEAT,CUSHION RPLS--..... 1560-626-7352		EA		1	*	*	2		*	118	150
			5340-985-0743	NAS1354DS7S08D	<80205>	...PIN,QUICK RELEASE.....		EA		1	*	*	*		*	118	152
			1560-587-6298	S1650-61321	<78286>	...CHAIN ASSEMBLY,TROOP SEAT. INSTALLATION RPL-BY 4010-058-2321		EA		1						118	
P	O		4010-058-2321	NAS1201B10A9B	<80205>	...CHAIN ASSEMBLY,TROOP SEAT. INSTALLATION RPLS-- 1560-587-6298 ATTACHING PARTS		EA		1	*	*	*		*	118	153
			5305-770-2529	MS51959-11	<96906>	...SCREW,MACHINE..... ---*---		EA		1	*	*	*		*	118	154
				S1650-61388-1	<78286>	...FITTING.....		EA		1						118	155
P	O		1560-544-0931	S1650-61320-2	<78286>	..COVER,TROOP SEATS.....		EA		1	*	REF	REF		REF	118	157
X2	O			S1650-61320-4	<78286>	..SPACER.....		EA		1						118	158
P	O		1680-536-8091	S1650-61319-2	<78286>	..PLATE,TROOP SEAT..... FURNISHINGS ATTACHING PARTS		EA		1	*	*	*		REF	118	159
			5306-182-2061	AN3H10A	<88044>	..BOLT,MACHINE..... ---*---		HD		2	*	*	*		*	118	160
P	O		1680-835-3175	S1650-61389-1	<78286>	..PLATE,INSTRUCTION..... ATTACHING PARTS		EA		1	*	*	*		*	118	161
			5305-984-6193	MS35206-245	<96906>	..SCREW,MACHINE.....		HD		4	*	*	*		*	118	162
			5310-184-8966	AN960PD8	<88044>	..WASHER,FLAT.....		HD		4	*	*	*		*	118	
			5310-811-3494	MS21044N08	<96906>	..NUT,SELF-LOCKING,HEXAGON... ---*---		EA		4	*	*	*		*	118	
P	O		5340-675-1266	BL4-1-200	<84256>	...PIN,QUICK RELEASE.....		EA		2	*	*	*		*	118	
						STEP ASSEMBLY,TROOP SEAT..... USBL EFF 56-4313 AND SUBSEQUENT										119	

(1) SOURCE, MAINT AND REC CODE (a) SOURCE CODE	(b) MAINT LEVEL CODE	(c) RECV LEVEL CODE	(2) FEDERAL STOCK NUMBER	(3) DESCRIPTION REFERENCE NUMBER			MODELS USABLE ON CH-34C	(4) UNIT OF ISSUE	(5) QTY INC IN UNIT PACK	(6) QTY NC IN UNIT	(7) 30-DAY DS GS MAINT ALW (a) 1-20	(b) 21-50	(c) 51-100	(8) 1-YR ALW PER 100 EQUIP CNTGCY	(9) DEPOT MAINT ALW PER 100 EQUIP	(10) ILLUSTRATION (a) FIG NO	(b) ITEM NO
P	O		1560-805-4908	S1650-61361	<78286>	STEP ASSEMBLY,TROOP SEAT..... USBL EFF 56-4313 & SUBSEQUENT SEE FIG.118 FOR NHA		EA			*	*	REF			119	
P	O		1680-439-8648	S1650-61373	<78286>	.GUARD,MUD,STEP SEAT.....		EA		1	2	2	3		*	119	1
			1680-439-8648	A7034	<15814>	ADDED PART NO.FOR ABOVE ITEM.		EA			REF	REF	REF			119	1
			5325-276-4946	AN227-7	<88044>	..SOCKET,SNAP FASTENER.....		EA		18	*	*	*		*	119	2
			5325-291-2393	AN227-6	<88044>	..CAP,SNAP FASTENER.....		EA		18	*	*	*		*	119	
P	O		1680-626-7342	S1650-61369	<78286>	.COVER,SEAT ASSEMBLY.....		EA		1	2	2	4		*	119	4
			1680-626-7342	4-6957	<15814>	ADDED PART NO.FOR ABOVE ITEM.		EA			REF	REF	REF			119	4
P	O		1680-626-7340	S1650-61367	<78286>	.CUSHION,STEP SEAT.....		EA		1	*	*	*		*	119	5
P	O		1560-626-7260	S1650-61370	<78286>	.PANEL ASSEMBLY..... ATTACHING PARTS		EA		1	*	*	*		*	119	6
			5305-822-7225	AN520C10R40	<88044>	.SCREW,MACHINE.....		EA		8	*	*	*		*	119	7
P	O		5310-567-0256	S1650-61328	<78286>	.WASHER,SADDLE.....		EA		8	REF	REF	REF		REF	119	
			5310-183-4406	AN960PD10	<88044>	.WASHER,FLAT.....		HD		16	*	*	*		*	119	
			5310-807-1467	MS21042-3	<96906>	.NUT,SELF-LOCKING,HEXAGON....				8	*	*	*		*	119	
						---*---											
P	O		1680-759-5500	A3A605	<76912>	.CLIP.....		EA		3	8	21	41		*	119	8
P	O		1560-626-7261	S1650-61368-1	<78286>	.BACK ASSEMBLY,STEPSEAT.....		EA		1	*	2	2		*	119	9
P	O		1680-759-5500	A3A605	<76912>	.CLIP.....		EA		3	REF	REF	REF		REF	119	10
P	O		1680-626-7341	S1650-61368-2	<78286>	.BACK ASSEMBLY.....		EA		1	2	2	3		*	119	11
			5310-807-1467	MS21042-3	<96906>	.NUT,SELF-LOCKING,HEXAGON....				2	*	*	*		*	119	12
			5310-807-1467	MS21042-3	<96906>	.NUT,SELF-LOCKING,HEXAGON....				2	*	*	*		*	119	13
P	F		1680-626-7339	S1650-61363	<78286>	.CABLE ASSEMBLY,RELEASE..... ATTACHING PARTS		EA		1	*	2	2		*	119	14
			5310-141-1795	AN960-416	<88044>	.WASHER,FLAT.....		HD		2	*	*	*		*	119	15
			5310-543-4443	MS20364-428A	<96906>	.NUT,SELF-LOCKING,HEXAGON....		HD		2	*	*	*		*	119	
						---*---											
			5306-260-7580	AN43-7	<88044>	.BOLT,EYE.....		EA		2	*	*	*		*	119	16
P	O		5306-573-1036	AC200322	<76912>	.BOLT,RING..... ATTACHING PARTS		EA		3	*	*	*		*	119	17
			5310-184-8980	AN960PD516L	<88044>	.WASHER,FLAT.....		HD		1	*	*	*		*	119	18
			5310-660-3381	MS21083N5	<96906>	.NUT,SELF-LOCKING,HEXAGON....				1	*	*	*		*	119	
						---*---											
			5306-182-1964	AN4H16A	<88044>	.BOLT,MACHINE.....		HD		2	*	*	*		*	119	19
			5310-187-2354	AN960PD416	<88044>	.WASHER,FLAT.....		HD		4	*	*	*		*	119	
			5310-922-9081	MS21083D4	<96906>	.NUT,SELF-LOCKING,HEXAGON....		EA		2	*	*	*		*	119	
			5340-825-9510	NAS43DD4-26	<80205>	.SPACER,SLEEVE.....		EA		2	*	*	*		*	119	20
P	O		1680-961-4365	S1650-61365-3	<78286>	.PLUG,SEAT STEP RPLS--..... 1560-874-7032		EA		2	2	2	4		*	119	21
P	O		1680-860-9472	S1650-61374	<78286>	.CORD ASSEMBLY.....		EA		1	3	7	13		*	119	22
			1680-860-9472	A880	<13730>	ADDED PART NO.FOR ABOVE ITEM. ATTACHING PARTS		EA			REF	REF	REF			119	22
			5306-156-2541	AN174H16A	<88044>	.BOLT,MACHINE.....		EA		1	*	*	*		*	119	23
			5310-167-0766	AN970-4	<88044>	.WASHER,FLAT.....		HD		2	*	*	*		*	119	
			5310-922-9081	MS21083D4	<96906>	.NUT,SELF-LOCKING,HEXAGON....		EA		1	*	*	*		*	119	
						---*---											
			5340-825-9510	NAS43DD4-26	<80205>	.SPACER,SLEEVE.....		EA		1	*	*	*		*	119	25
X2	O			S1650-61366	<78286>	.STRUT ASSEMBLY..... ATTACHING PARTS		EA		1						119	26
			5306-182-2059	AN3H6A	<88044>	.BOLT,MACHINE.....		HD		2	*	*	*		*	119	27

(1) SOURCE, MAINT AND REC CODE (a) SOURCE CODE	(b) MAINT LEVEL	(c) REC CODE	(2) FEDERAL STOCK NUMBER	REFERENCE NUMBER		(3) DESCRIPTION	MODELS USABLE ON CH-34C	(4) UNIT OF ISSUE	(5) QTY INC IN UNIT PACK	(6) QTY INC IN UNIT	(7) 30-DAY DS GS MAINT ALW (a) 1-20	(b) 21-50	(c) 51-100	(8) 1-YR ALWPER 100 EQUIP CNTGCY	(9) DEPOT MAINT ALWPER 100 EQUIP	(10) ILLUSTRATION (a) FIG NO	(b) ITEM NO
			5310-183-4406	AN960PD10	<88044>	.WASHER,FLAT.....		HD		4	*	*	*		*	119	
			5310-905-3081	MS21083-D3	<96906>	.NUT,SELF-LOCKING,HEXAGON....				2	*	*	*		*	119	
						---*---											
			5306-638-2225	AN43B13	<88044>	.BOLT,EYE.....		EA		1	*	*	*		*	119	28
			5310-187-2354	AN960PD416	<88044>	.WASHER,FLAT.....		HD		1	*	*	*		*	119	
			5310-922-9081	MS21083D4	<96906>	.NUT,SELF-LOCKING,HEXAGON....		EA		1					*	119	
P	O		1680-860-9472	S1650-61374	<78286>	.CORD ASSEMBLY.....		EA		1	REF	REF	REF		REF	119	29
						ATTACHING PARTS											
			5306-272-2141	AN43B15	<88044>	.BOLT,EYE.....		EA		1	*	*	*		*	119	30
			5310-187-2354	AN960PD416	<88044>	.WASHER,FLAT.....		HD		1	*	*	*		*	119	
			5310-922-9081	MS21083D4	<96906>	.NUT,SELF-LOCKING,HEXAGON....		EA		1	*	*	*	*	*	119	
						---*---											
			5340-825-9510	NAS43DD4-26	<80205>	.SPACER,SLEEVE.....		EA		1	*	*	*		*	119	32
X2	O			S1650-61364	<78286>	.FORK ASSEMBLY.....		EA		2						119	33
						ATTACHING PARTS											
			5306-550-1159	AN174H14A	<88044>	.BOLT,MACHINE.....		EA		1	*	*	*		*	119	34
			5310-187-2354	AN960PD416	<88044>	.WASHER,FLAT.....		HD		2	*	*	*		*	119	
			5310-922-9081	MS21083D4	<96906>	.NUT,SELF-LOCKING,HEXAGON....		EA		1	*	*	*		*	119	
						---*---											
			5340-530-7968	MS16624-1100	<96906>	.RING-RETAINING.....		EA		2	*	*	*		*	119	35
X2	O			S1650-61371-2	<78286>	.TUBE,SEAT STEP.....		EA		1						119	36
						ATTACHING PARTS											
			5306-807-0047	AN3DDH14	<88044>	.BOLT,MACHINE.....		EA		4	*	*	*		*	119	37
			5310-183-4406	AN960PD10	<88044>	.WASHER,FLAT.....		HD		8	*	*	*		*	119	
			5310-905-3081	MS21083D3	<96906>	.NUT,SELF-LOCKING,HEXAGON....				4	*	*	*		*	119	
						---*---											
P	O			S1650-61371-1	<78286>	.PIN,SEAT STEP.....		EA		2						119	38
P	O		1680-663-3442	S1650-61132	<78286>	.SPRING,HELICAL,COMPRESSION..		EA		2	*	*	*		REF	119	39
			1680-736-8862	S1650-61362-23	<78286>	.SEAT STRUCTURE ASSEMBLY.....										119	
						RPL-BY 1680-983-7262											
P	O		1680-983-7262	S1650-61362-1	<78286>	.WELD ASSEMBLY,SEAT.....		EA		2	*	*	*		*	119	40
						RPLS-- 1680-736-8862											
						ATTACHING PARTS											
			5306-180-2716	AN5H21	<88044>	.BOLT,MACHINE.....		HD		2	*	*	*		*	119	41
			5310-187-2399	AN960PD516	<88044>	.WASHER,FLAT.....		HD		4	*	*	*		*	119	
			5310-660-3381	MS21083N5	<96906>	.NUT,SELF-LOCKING,HEXAGON....				2	*	*	*		*	119	
			5306-180-2716	AN5H21	<88044>	.BOLT,MACHINE.....		HD		2	*	*	*		*	119	42
			5310-187-2399	AN960PD516	<88044>	.WASHER,FLAT.....		HD		4	*	*	*		*	119	
			5310-660-3381	MS21083N5	<96906>	.NUT,SELF-LOCKING,HEXAGON....				2	*	*	*		*	119	
						---*---											
P	F		1560-626-7290	S1650-61372	<78286>	.SUPPORT,TUBE ASSEMBLY.....		EA		1	*	*	*		*	119	43
			1680-736-8862	S1650-61362-23	<78286>	.SEAT STRUCTURE ASSEMBLY.....		EA								119	
P	O		1680-983-7262	S1650-61362/1	<78286>	.WELD ASSEMBLY,SEAT.....		EA		2	*	*	*		*	119	44
						RPLS-- 1680-736-8862											
P	O		1680-795-0794	S1650-61377-16	<78286>	..BRACKET,TROOP SEAT.....		EA		1	*	*	*		REF	119	45
						ATTACHING PARTS											
			5306-656-0358	AN3-6A	<88044>	..BOLT,MACHINE.....		HD		2	*	*	*		*	119	46
			5310-167-0753	AN960PD10L	<88044>	..WASHER,FLAT.....		HD		2	*	*	*		*	119	
			5306-182-2062	AN3-11A	<88044>	..BOLT,MACHINE.....		HD		2	*	*	*		*	119	47
			5310-167-0753	AN960PD10L	<88044>	..WASHER,FLAT.....		HD		2	*	*	*		*	119	
						---*---											

(1) SOURCE, MAINT AND REC CODE (a) SOURCE CODE	(b) MAINT LEVEL	(c) REC CODE	(2) FEDERAL STOCK NUMBER	(3) DESCRIPTION REFERENCE NUMBER			MODELS USABLE ON CH-34C	(4) UNIT OF ISSUE	(5) QTY INC IN UNIT PACK	(6) QTY INC IN UNIT	(7) 30-DAY DS GS MAINT ALW (a) 1-20	(b) 21-50	(c) 51-100	(8) 1-YR ALW PER 100 EQUIP CNTGCY	(9) DEPOT MAINT ALW PER 100 EQUIP	(10) ILLUSTRATION (a) FIG NO	(b) ITEM NO
P	O		1560-633-6948	S1620-61020-27	<78286>	..SUPPORT ASSEMBLY.....		EA		1	*	*	*		REF	119	48
				S1650-61250	<78286>	LITTER INSTALLATION SEE..... FIG.115 FOR NHA										120	
				7-837-905	<80234>	.LITTER,ALUMINUM POLE.....		EA		4						120	1
P	O		1680-536-8061	S1650-61224	<78286>	.CAP ASSEMBLY,LITTER SUPPORT.		EA		4	2	2	3		*	120	2
			1680-536-8061	A7040	<15814>	.ADDED PART NO.FOR ABOVE ITEM		EA			REF	REF	REF			120	2
P	O		1680-591-8327	S1650-61224-1	<78286>	..STRAP,LITTER SUPPORT.....		EA		1	*	*	*		*	120	7
P	O		1680-600-2114	FDC1575M1	<98313>	..CLIP,TIE.....		EA		1	*	*	*			120	8
P	O		1560-544-0920	S1650-62303	<78286>	.EYE BOLT AND RING ASSEMBLY.. ATTACHING PARTS		EA		2	*	REF	REF		REF	120	9
			5310-184-8980	AN960PD516L	<88044>	.WASHER,FLAT.....		HD		1	*	*	*		*	120	10
			5310-088-0553	MS21044N5	<96906>	.NUT,SELF-LOCKING,HEXAGON....		HD		1	*	*	*		*	120	
						---*---											
MF	F			S1650-61230	<78286>	.SPACER..... MAKEFR AR 9535-554-1414 AL ALLY SH		EA		2						120	11
P	O		1560-544-0947	S1650-61251-2	<78286>	.STRAP ASSEMBLY,LITTER..... INSTALLATION INBOARD		EA		1	*	*	*		*	120	15
				S1650-61287	<78286>	.SUPPORT INSTALLATION AND.... ASSEMBLY				1						120	
P	O		1680-446-7580	S1650-62187-1	<78286>	.STRAP.....		EA		2	*	*	*		*	120	
				S1650-62197-2	<78286>	.SUPPORT INSTALLATION AND.... ASSEMBLY				1						120	
			5305-958-1011	MS35219-56	<96906>	..SCREW,MACHINE.....		HD		4	*	*	*		*	120	16
			5310-183-4406	AN960PD10	<88044>	..WASHER,FLAT.....		HD		4	*	*	*		*	120	
			5310-877-5798	MS21044D3	<96906>	..NUT,SELF-LOCKING,HEXAGON...		EA		4	*	*	*		*	120	
				S1650-61201-5	<78286>	.FITTING INSTALLATION,..... LITTER SUPPORT				1						120	
			5306-275-9696	AN3DDH6	<88044>	..BOLT,MACHINE.....		EA		4	*	*	*		*	120	20
			5310-183-4406	AN960PD10	<88044>	..WASHER,FLAT.....		HD		4	*	*	*		*	120	
			5310-877-5798	MS21044D3	<96906>	..NUT,SELF-LOCKING,HEXAGON...		EA		4	*	*	*		*	120	
MF	F			S1650-61201-4	<78286>	..SPACER..... MAKEFR AR 9535-167-2280 AL ALLY SH		EA		1						120	21
P	O		1560-544-0946	S1650-61251-1	<78286>	.STRAP ASSEMBLY,LITTER..... RETAINING		EA		1	*	2	2		*	120	25
P	F		1615-304-4603	9100	<79500>	..BUCKLE.....		EA		1	*	*	*		*	120	27
			1680-600-6144	FDC1835	<98813>	..BRACKET ASSEMBLY,LITTER.... SUPPORT RPL-BY 1680-062-9521										120	
P	O		1680-062-9521	FDC3835	<98313>	..BRACKET ASSEMBLY,LITTER.... SUPPORT RPLS-- 1680-600-6144		EA		1	2	2	3		*	120	29
X2	F			S1650-61252	<78286>	...BRACKET.....		EA		1						120	
P	O		1680-062-9521	FDC3835	<98313>	..BRACKET ASSEMBLY,LITTER.... SUPPORT RPLS--		EA		1	REF	REF	REF		REF	120	31

(1) SOURCE, MAINT AND REC CODE (a) SOURCE CODE	(b) MAINT LEVEL	(c) REC CODE	(2) FEDERAL STOCK NUMBER	(3) DESCRIPTION REFERENCE NUMBER			MODELS USABLE ON CH-34C	(4) UNIT OF ISSUE	(5) QTY INC IN UNIT PACK	(6) QTY INC IN UNIT	(7) 30-DAY DS GS MAINT ALW (a) 1-20	(b) 21-30	(c) 51-100	(8) 1-YR ALW PER 100 EQUIP CNTGCY	(9) DEPOT MAINT ALW PER 100 EQUIP	(10) ILLUSTRATION (a) F.G NO	(b) ITEM NO
						CONTINUED										120	31
						1680-600-6144											
X2	F			S1650-61252	<78286>	...BRACKET.....		EA		1						120	
AF	F			S1650-61236-1	<78286>	..BRACKET AND HOOK ASSEMBLY..		EA		1						120	33
P	F		1680-862-9125	B1636-2	<99879>	...BRACKET ASSEMBLY,LITTER...		EA		1	*	*	*		*	120	33A
						SUPPORT											
P	O		1680-062-9521	FDC3835	<98313>	...BRACKET ASSEMBLY,LITTER...		EA		1	REF	REF	REF		REF	120	36
						SUPPORT RPLS--											
						1680-600-6144											
X2	F			S1650-61252	<78286>	....BRACKET.....		EA		1						120	
P	O		1680-062-9521	FDC3835	<98313>	.BRACKET ASSEMBLY,LITTER.....		EA		1	REF	REF	REF		REF	120	37
						SUPPORT RPLS--											
						1680-600-6144											
						ATTACHING PARTS											
			5306-182-1965	AN4H17A	<88044>	.BOLT,MACHINE.....		HD		2	*	*	*		*	120	
			5310-141-1795	AN960-416	<88044>	.WASHER,FLAT.....		HD		2	*	*	*		*	120	
			5310-877-5796	MS21044N4	<96906>	.NUT,SELF-LOCKING,HEXAGON....		EA		2	*	*	*		*	120	
						---*---											
X2	F			S1650-61252	<78286>	..BRACKET.....		EA		1						120	38
P	O		1680-062-9521	FDC3835	<98313>	.BRACKET ASSEMBLY,LITTER.....		EA		1	REF	REF	REF		REF	120	39
						SUPPORT RPLS--											
						1680-600-6144											
						ATTACHING PARTS											
			5306-180-3360	AN4H21A	<88044>	.BOLT,MACHINE.....		HD		2	*	*	*		*	120	
			5310-141-1795	AN960-416	<88044>	.WASHER,FLAT.....		HD		2	*	*	*		*	120	
			5310-877-5796	MS21044N4	<96906>	.NUT,SELF-LOCKING,HEXAGON....		EA		2	*	*	*		*	120	
						---*---											
X2	F			S1650-61252	<78286>	..BRACKET.....		EA		1						120	40
P	O		1680-062-9521	FDC3835	<98313>	.BRACKET ASSEMBLY,LITTER.....		EA		1	REF	REF	REF		REF	120	41
						SUPPORT RPLS--											
						1680-600-6144											
						ATTACHING PARTS											
			5306-182-1965	AN4H17A	<88044>	.BOLT,MACHINE.....		HD		2	*	*	*		*	120	
			5310-141-1795	AN960-416	<88044>	.WASHER,FLAT.....		HD		2	*	*	*		*	120	
			5310-877-5796	MS21044N4	<96906>	.NUT,SELF-LOCKING,HEXAGON....		EA		2	*	*	*		*	120	
						---*---											
X2	F			S1650-61252	<78286>	..BRACKET.....		EA		1						120	42
P	O		1680-062-9521	FDC3835	<98313>	.BRACKET ASSEMBLY,LITTER.....		EA		1	REF	REF	REF		REF	120	43
						SUPPORT RPLS--											
						1680-600-6144											
						ATTACHING PARTS											
			5306-180-3360	AN4H21A	<88044>	.BOLT,MACHINE.....		HD		2	*	*	*		*	120	
			5310-141-1795	AN960-416	<88044>	.WASHER,FLAT.....		HD		2	*	*	*		*	120	
			5310-877-5796	MS21044N4	<96906>	.NUT,SELF-LOCKING,HEXAGON....		EA		2	*	*	*		*	120	
						---*---											
X2	F			S1650-61252	<78286>	..BRACKET.....		EA		1						120	44
P	O		1680-536-8061	S1650-61224	<78286>	.CAP ASSEMBLY,LITTER SUPPORT.		EA		4	REF	REF	REF		REF	120	46
P	O		1680-591-8327	S1650-61224-1	<78286>	..STRAP,LITTER SUPPORT.....		EA		1	*	*	*		REF	120	51
P	O		1680-600-2114	FDC1575M1	<98313>	..CLIP,TIE.....		EA		1	*	*	*			120	52
P	O		1560-544-0920	S1650-62303	<78286>	.EYE BOLT AND RING.....		EA		1	*	REF	REF		REF	120	53
						ATTACHING PARTS											
			5310-184-8980	AN960PD516L	<88044>	.WASHER,FLAT.....		HD		1	*	*	*		*	120	54

(1) SOURCE, MAINT AND REC CODE (a) SOURCE CODE	(b) MAINT CATEGORY	(c) REC CODE	(2) FEDERAL STOCK NUMBER	REFERENCE NUMBER		(3) DESCRIPTION	MODELS USABLE ON CH-34C	(4) UNIT OF ISSUE	(5) QTY INC IN UNIT PACK	(6) QTY INC IN UNIT	(7) 30-DAY DS GS MAINT ALW (a) 1-20	(b) 21-50	(c) 51-100	(8) 1-YR ALW PER 100 EQUIP CNTGCY	(9) DEPOT MAINT ALW PER 100 EQUIP	(10) ILLUSTRATION (a) FIG NO	(b) ITEM NO
			5310-088-0553	MS21044N5	<96906>	.NUT,SELF-LOCKING,HEXAGON....		HD		1	*	*	*		*	120	
						---*---											
X2	O		1560-798-3630	S1650-62301-1	<78286>	.FILLER,SAFETY BELT RPLS--..		EA		1	*	*	*		REF	120	55
						1560-691-4467											
P	O		1560-654-3179	S1650-62302	<78286>	.SPACER,SAFETY BELT AND.....		EA		1	*	*	*		REF	120	56
						LITTER TIE DOWN											
P	O		1560-544-0920	S1650-62303	<78286>	.EYE BOLT AND RING.....		EA		1	*	REF	REF		REF	120	58
						ATTACHING PARTS											
			5310-184-8980	AN960PD516L	<88044>	.WASHER,FLAT.....		HD		1	*	*	*		*	120	59
			5310-088-0553	MS21044N5	<96906>	.NUT,SELF-LOCKING,HEXAGON....		HD		1	*	*	*		*	120	
						---*---											
MF	F			S1650-61230	<78286>	.SPACER.....		EA		1						120	60
						MAKEFR											
						AR 9535-554-1414 AL ALLY SH											
P	O		1560-544-0920	S1650-62303	<78286>	.EYE BOLT AND RING ASSEMBLY..		EA		1	*	REF	REF		REF	120	64
						ATTACHING PARTS											
			5310-184-8980	AN960PD516L	<88044>	.WASHER,FLAT.....		HD		1	*	*	*		*	120	65
			5310-088-0553	MS21044N5	<96906>	.NUT,SELF-LOCKING,HEXAGON....		HD		1	*	*	*		*	120	
						---*---											
MF	F			S1650-61230	<78286>	.SPACER.....		EA		1						120	66
						MAKEFR											
						AR 9535-554-1414 AL ALLY SH											
P	O		1560-544-0946	S1650-61251-1	<78286>	.STRAP ASSEMBLY,LITTER.....		EA		2	*	REF	REF		REF	120	70
						RETAINING											
P	F		1615-304-4603	9100	<79500>	..BUCKLE.....		EA		1						120	72
P	O		1680-062-9521	FDC3835	<98313>	..BRACKET ASSEMBLY,LITTER....		EA		1	REF	REF	REF		REF	120	74
						SUPPORT RPLS--											
						1680-600-6144											
X2	F			S1650-61252	<78286>	...BRACKET.....		EA		1						120	
P	O		1680-062-9521	FDC3835	<98313>	..BRACKET ASSEMBLY,LITTER....		EA		1	REF	REF	REF		REF	120	76
						SUPPORT RPLS--											
						1680-600-6144											
X2	F			S1650-61252	<78286>	...BRACKET.....		EA		1						120	
AF	F			S1650-61236-1	<78286>	..BRACKET AND HOOK ASSEMBLY..		EA		1						120	78
P	F		1680-862-9125	B1636-2	<99879>	...BRACKET ASSEMBLY,LITTER...		EA		1	*	*	*		REF	120	78A
						SUPPORT											
P	O		1680-062-9521	FDC3835	<98313>	...BRACKET ASSEMBLY,LITTER...		EA		1	REF	REF	REF		REF	120	81
						SUPPORT RPLS--											
						1680-600-6144											
X2	F			S1650-61252	<78286>	....BRACKET.....		EA		1						120	
P	O		1680-062-9521	FDC3835	<98313>	.BRACKET ASSEMBLY,LITTER.....		EA		1	REF	REF	REF		REF	120	82
						SUPPORT RPLS--											
						1680-600-6144											
						ATTACHING PARTS											
			5306-180-3360	AN4H21A	<88044>	.BOLT,MACHINE.....		HD		2	*	*	*		*	120	83
			5310-141-1795	AN960-416	<88044>	.WASHER,FLAT.....		HD		2	*	*	*		*	120	
			5310-877-5797	MS21044N3	<96906>	.NUT,SELF-LOCKING,HEXAGON....		EA		2	*	*	*		*	120	
						---*---											
P	O		1680-062-9521	FDC3835	<98313>	.BRACKET ASSEMBLY,LITTER.....		EA		1	REF	REF	REF		REF	120	84
						SUPPORT RPLS--											
						1680-600-6144											
						ATTACHING PARTS											

(1) SOURCE, MAINT AND REC CODE (a) SOURCE CODE	(b) MAINT CODE	(c)	(2) FEDERAL STOCK NUMBER	REFERENCE NUMBER		(3) DESCRIPTION	MODELS USABLE ON CH-34C	(4) UNIT OF ISSUE	(5) QTY INC IN UNIT PACK	(6) QTY INC IN UNIT	(7) 30-DAY DS GS MAINT ALW (a) 1-20	(b) 21-50	(c) 51-100	(8) 1-YR ALW PER 100 EQUIP CNTGCY	(9) DEPOT MAINT ALW PER 100 EQUIP	(10) ILLUSTRATION (a) FIG NO	(b) ITEM NO
			5306-182-1965	AN4H17A	<88044>	.BOLT,MACHINE.....		HD		2	*	*	*		*	120	
			5310-141-1795	AN960-416	<88044>	.WASHER,FLAT.....		HD		2	*	*	*		*	120	
			5310-877-5796	MS21044N4	<96906>	.NUT,SELF-LOCKING,HEXAGON....		EA		2	*	*	*		*	120	
						---*---											
X2	F			S1650-61252	<78286>	..BRACKET.....		EA		1						120	85
P	O		1680-062-9521	FDC3835	<98313>	.BRACKET ASSEMBLY,LITTER.....		EA		1	REF	REF	REF		REF	120	86
						SUPPORT RPLS--											
						1680-600-6144											
						ATTACHING PARTS											
			5306-182-1965	AN4H17A	<88044>	.BOLT,MACHINE.....		HD		2	*	*	*		*	120	
			5310-141-1795	AN960-416	<88044>	.WASHER,FLAT.....		HD		2	*	*	*		*	120	
			5310-877-5797	MS21044N3	<96906>	.NUT,SELF-LOCKING,HEXAGON....		EA		2	*	*	*		*	120	
						---*---											
X2	F			S1650-61252	<78286>	..BRACKET.....		EA		1						120	87
P	F		1560-639-0599	S1650-61203-1	<78286>	.SUPPORT ASSEMBLY.....		EA		1	*	2	2		*	120	88
						ATTACHING PARTS											
			5306-559-8134	AN3DDH5A	<88044>	.BOLT,MACHINE.....		EA		4	*	*	*		*	120	89
			5310-183-4406	AN960PD10	<88044>	.WASHER,FLAT.....		HD		8	*	*	*		*	120	
			5310-877-5798	MS21044D3	<96906>	.NUT,SELF-LOCKING,HEXAGON....		EA		4	*	*	*		*	120	
						---*---											
P	F		1560-639-0599	S1650-61203-1	<78286>	.SUPPORT ASSEMBLY.....		EA		1	*	REF	REF		REF	120	90
						ATTACHING PARTS											
			5306-559-8143	AN3DDH6A	<88044>	.BOLT,MACHINE.....		EA		2	*	*	*		*	120	91
			5310-183-4406	AN960PD10	<88044>	.WASHER,FLAT.....		HD		4	*	*	*		*	120	
			5310-877-5798	MS21044D3	<96906>	.NUT,SELF-LOCKING,HEXAGON....		EA		2	*	*	*		*	120	
			5306-559-8134	AN3DDH5A	<88044>	.BOLT,MACHINE.....		EA		2	*	*	*		*	120	92
			5310-183-4406	AN960PD10	<88044>	.WASHER,FLAT.....		HD		2	*	*	*		*	120	
			5310-877-5798	MS21044D3	<96906>	.NUT,SELF-LOCKING,HEXAGON....		EA		2	*	*	*		*	120	
						---*---											
P	F		1560-975-9387	S1650-61203-3	<78286>	.FILLER,LITTER.....		EA		2	*	*	*		*	120	
				S1650-62175	<78286>	BLIND FLYING PANEL.....										121	
						INSTALLATION SEE FIG.115											
						FOR NHA											
				S1650-62175-1	<78286>	.STUD INSTALLATION.....				1						121	
P	F		5325-619-6807	B401	<61864>	..STUD.....		EA		16	*	*	*			121	1
P	H		5320-167-4946	P5C	<29666>	..RIVET,BLIND.....		EA		32	*	*	*		*	121	2
P	H		5320-167-4946	P5C	<29666>	..RIVET,BLIND.....		EA		10	*	*	*		REF	121	4
P	O		1560-570-4897	S1650-62176-1	<78286>	.PANEL ASSEMBLY,BLIND FLYING.		EA		1	*	*	*		*	121	5
P	O		1560-509-0641	S1650-62176-2	<78286>	.PANEL ASSEMBLY,BLIND FLYING.		EA		1	*	2	2		*	121	
MF	F			S14-50-3044	<78286>	..TAB.....		EA		1						121	6
						MAKEFR											
						AR 8305-267-3116 CORD											
P	O		1560-705-0423	S1650-62178-10	<78286>	.PANEL ASSEMBLY,BLIND.....		EA		1	*	2	2		*	121	7
						FLYING RPLS--											
						1560-570-4898											
P	O		1560-691-4473	S1650-62177-6	<78286>	.PANEL ASSEMBLY,BLIND FLYING.		EA		1	*	*	2		*	121	8

(1) SOURCE, MAINT AND REC CODE (a) SOURCE CODE	(b) MAINT LEVEL	(c) REC CODE	(2) FEDERAL STOCK NUMBER	(3) DESCRIPTION REFERENCE NUMBER			MODELS USABLE ON CH-34C	(4) UNIT OF ISSUE	(5) QTY INC IN UNIT PACK	(6) QTY INC IN UNIT	(7) 30-DAY DS GS MAINT ALW (a) 1-20	(b) 21-50	(c) 51-100	(8) 1-YR ALW PER 100 EQUIP CNTGCY	(9) DEPOT MAINT ALW PER 100 EQUIP	(10) ILLUSTRATION (a) FIG NO	(b) ITEM NO
P	O		1560-672-3561	S1650-62179-1	<78286>	.PANEL ASSEMBLY,BLIND FLYING. RPLS-- 1560-570-4899		EA		1	*	*	*		*	121	9
				S1650-62195	<78286>	CARGO SLING INSTALLATION..... SEE FIG.115 FOR NHA										122	
				S1655-61651-1	<78286>	.WIRING INSTALLATION,CARGO... SLING				1						122	
			5935-280-2195	MS3057-6A	<96906>	..ADAPTER,CABLE TO CONNECT...		EA		1	*	*	*		*	122	1
X1				2245-5	<91577>	..SHELL,ELECTRICAL CONNECTION -ALTERNATE-		EA		1						122	2
				97-180-18	<02660>	..SHELL,ELECTRICAL..... CONNECTION ATTACHING PARTS		EA		1						122	
			5305-053-1114	MS24621-11	<96906>	..SCREW,TAPPING,THREAD..... FORMING		EA		4	*	*	*		*	122	3
			5310-187-2408	MS15795-704	<96906>	..WASHER,FLAT.....		HD		4	*	*	*		*	122	
			5310-543-2410	AN935-4	<88044>	..WASHER,LOCK..... ---*---		HD		4	*	*	*		*	122	
P	F		5935-396-0068	10-40450-16	<77820>	..GASKET.....		EA		1	4	10	19		*	122	4
				S1650-62153	<78286>	.SLING STOWAGE INSTALLATION.. CARGO HOIST				1						122	
			5340-533-3513	EAB700-6	<81996>	..CLAMP,LOOP..... ATTACHING PARTS		EA		1	*	*	*		*	122	5
			5305-151-2235	MS35207-264	<96906>	..SCREW,MACHINE.....		HD		1	*	*	*		*	122	6
			5310-167-0818	AN960-10	<88044>	..WASHER,FLAT.....		HD		1	*	*	*		*	122	
			5310-877-5797	MS21044N3	<96906>	..NUT,SELF-LOCKING,HEXAGON... ---*---		EA		1	*	*	*		*	122	
			5340-533-3513	EAB700-6	<81996>	..CLAMP,LOOP..... ATTACHING PARTS		EA		1	*	*	*		*	122	7
			5305-989-7435	MS35207-264	<96906>	..SCREW,MACHINE.....		HD		1	*	*	*		*	122	8
			5310-167-0818	AN960-10	<88044>	..WASHER,FLAT.....		HD		1	*	*	*		*	122	
			5310-877-5797	MS21044N3	<96906>	..NUT,SELF-LOCKING,HEXAGON... ---*---		EA		1	*	*	*		*	122	
			1560-567-5354	S1650-62154-2	<78286>	..CABLE ASSEMBLY RPL-BY..... 1560-675-3287										122	
P	F		1560-675-3287	S1650-62154-10	<78286>	..CABLE ASSEMBLY RPLS--..... 1560-567-5354		EA		1	*	2	2		*	122	9
				S1650-62154-1	<78286>	..CHOCK AND FAIRLEAD..... INSTALLATION				1						122	
X2	F		1560-546-1148	S1650-62154-8	<78286>	...LEAD.....		EA		1	*	*	*		*	122	10
P	F		1560-546-1149	S1650-62154-9	<78286>	...CHOCK,CARGO SLING..... ATTACHING PARTS		EA		1	*	*	*		*	122	12
				MS20470AD4	<96906>	...RIVET..... ---*---		EA		2						122	13
				S1650-62196	<78286>	.SLING INSTALLATION-CARGO.... HOIST				1						122	
		R	1680-604-3243	SP4070	<96603>	..HOOK,CARGO SLING RPL-BY...										122	

(1) SOURCE, MAINT AND REC CODE (a) SOURCE CODE	(b) MAINT LEVEL	(c) REC CODE	(2) FEDERAL STOCK NUMBER	REFERENCE NUMBER		(3) DESCRIPTION	MODELS USABLE ON CH-34C	(4) UNIT OF ISSUE	(5) QTY INC IN UNIT PACK	(6) QTY INC IN UNIT	(7) 30-DAY DS/GS MAINT ALW (a) 1-20	(b) 21-50	(c) 51-100	(8) 1-YR ALW PER 100 EQUIP CNTGCY	(9) DEPOT MAINT ALW PER 100 EQUIP	(10) ILLUSTRATION (a) FIG NO	(b) ITEM NO
						CONTINUED										122	
						1680-708-2341											
		R	1680-647-3028	SP4070-1	<96603>	..HOOK,CARGO SLING RPL-BY...										122	
						1680-708-2341											
P	O	R	1680-708-2341	SP4070-3	<96603>	..HOOK,CARGO SLING RPLS--...		EA		1	*	2	2	17	*	122	14
						1680-604-3243,											
						1680-647-3028											
P	O		1680-784-3902	SP698	<96603>	..WINCH,SHACKLE SLING.....		EA		2	*	2	2		*	122	
			1560-626-7286	S1650-62162	<78286>	..CABLE ASSEMBLY,CARGO.....										122	
						SLING RPL-BY											
						1560-565-8499											
P	F		1560-565-8499	S1650-62162-1	<78286>	..CABLE ASSEMBLY,CARGO.....		EA		2	*	2	2		*	122	15
						SLING RPLS--											
						1560-626-7286											
P	O		1560-546-1141	S1650-62193	<78286>	..CABLE ASSEMBLY,CARGO.....		EA		4	*	2	2		*	122	
						SLING USBL EFF 56-4284 &											
						SUBSEQUENT											
						ATTACHING PARTS											
			5306-144-3853	AN25-17	<88044>	..BOLT,CLEVIS.....		EA		1	*	*	*		*	122	16
			5306-853-9119	AN27-20A	<88044>	..BOLT,MACHINE.....		EA		1	*	*	*			122	
			5310-167-0820	AN960-516	<88044>	..WASHER,FLAT U/O NHA.....		HD		2	*	*	*		*	122	
						1560-565-8499											
			5310-167-0822	AN960-716	<88044>	..WASHER,FLAT.....		HD		2	*	*	*		*	122	
			5310-660-3381	MS21083N5	<96906>	..NUT,SELF-LOCKING,HEXAGON...				1	*	*	*		*	122	
			5310-806-1831	MS21040-7	<96906>	..NUT,SELF-LOCKING,HEXAGON...		EA		1	*	*	*		*	122	
						---*---											
				S1650-62151-26	<78286>	.SUPPORT INSTALLATION-LH.....				1						122	
				S1650-62151-27	<78286>	.SUPPORT INSTALLATION-RH.....				1						122	
P	O		3940-624-8206	S1650-62151-5	<78286>	..SUPPORT ASSEMBLY,CARGO.....		EA		1	*	2	2		*	122	17
						SLING SUPPORT USBL EFF											
						53-4475 THRU 55-4504											
P	O		1560-626-7287	S1650-62151-6	<78286>	..WELD ASSEMBLY,CARGO SLING..		EA		1	*	*	2		*	122	
						SUPPORT USBL EFF 53-4475											
						THRU 55-4504											
			5306-182-2061	AN3H10A	<88044>	..BOLT,MACHINE.....		HD		2	*	*	*		*	122	18
			5310-167-0818	AN960-10	<88044>	..WASHER,FLAT.....		HD		2	*	*	*		*	122	
			5306-182-2059	AN3H6A	<88044>	..BOLT,MACHINE.....		HD		2	*	*	*		*	122	19
			5310-167-0818	AN960-10	<88044>	..WASHER,FLAT.....		HD		2	*	*	*		*	122	
			5306-182-2058	AN3H5A	<88044>	..BOLT,MACHINE.....		EA		3	*	*	*		*	122	20
			5310-167-0818	AN960-10	<88044>	..WASHER,FLAT.....		HD		3	*	*	*		*	122	
						---*---											
				S1650-61020-2	<78286>	.SUPPORT INSTALLATION-LH.....				1						122	
				S1650-61020-26	<78286>	.SUPPORT INSTALLATION-RH.....				1						122	
P	O		3940-624-8206	S1650-62151-5	<78286>	..SUPPORT ASSEMBLY,CARGO.....		EA		1	*	REF	REF		REF	122	21
						SLING SUPPORT											
						USBL EFF 53-4475 THRU											
						55-4504											
P	O		1560-626-7287	S1650-62151-6	<78286>	..WELD ASSEMBLY,CARGO SLING..		EA		1	*	*	REF		REF	122	
						SUPPORT											
						ATTACHING PARTS											
			5306-182-2058	AN3H5A	<88044>	..BOLT,7ACHINE U/O.....		EA		2	*	*	*		*	122	22
						3940-624-8206											

(1) SOURCE, MAINT AND REC CODE (a) SOURCE CODE	(b) MAINT LEVEL	(c) REC CODE	(2) FEDERAL STOCK NUMBER	REFERENCE NUMBER		(3) DESCRIPTION	MODELS USABLE ON CH-34C	(4) UNIT OF ISSUE	(5) QTY INC IN UNIT PACK	(6) QTY INC IN UNIT	(7) 30-DAY DS GS MAINT ALW (a) 1-20	(b) 21-50	(c) 51-100	(8) 1-YR ALWPER 100 EQUIP CNTGCY	(9) DEPOT MAINT ALWPER 100 EQUIP	(10) ILLUSTRATION (a) FIG NO	(b) ITEM NO
			5306-182-2058	AN3H5A	<88044>	..BOLT,MACHINE U/O..... 3940-624-8206		EA		4	*	*	*		*	122	
			5310-167-0818	AN960-10	<88044>	..WASHER,FLAT.....		HD		2	*	*	*		*	122	
			5310-167-0834	AN960-10L	<88044>	..WASHER,FLAT.....		HD		4	*	*	*		*	122	
			5306-182-2061	AN3H10A	<88044>	..BOLT,MACHINE.....		HD		2	*	*	*		*	122	23
			5310-167-0818	AN960-10	<88044>	..WASHER,FLAT.....		HD		2	*	*	*		*	122	
			5306-182-2059	AN3H6A	<88044>	..BOLT,MACHINE U/O..... 3940-624-8206		HD		3	*	*	*		*	122	24
			5310-167-0818	AN960-10	<88044>	..WASHER,FLAT U/O..... 3940-624-8206		HD		3	*	*	*		*	122	
						---*---											
			5306-151-1961	AN23-9	<88044>	.BOLT,CLEVIS.....		EA		1	*	*	*		*	122	25
			5310-183-4406	AN960PD10	<88044>	.WASHER,FLAT.....		HD		2	*	*	*		*	122	
			5310-176-8109	AN370-5	<88044>	.NUT,SLOTTED,HEXAGON.....		HD		1	*	*	*		*	122	
			5315-234-1856	MS24665-155	<96906>	.PIN,COTTER.....		HD		1	*	*	*		*	122	
				S1650-62155-8	<78286>	.CONTROLS INSTALLATION..... CARGO SLING				1						122	
			4730-287-0289	AN818-4D	<88044>	..NUT,TUBE COUPLING.....		EA		1	*	*	*		*	122	26
			4730-302-8641	MS20819-4D	<96906>	..SLEEVE,FLARED TUBE FITTING.		EA		1	*	*	*		*	122	27
			4030-273-3081	AN664C2	<88044>	..BALL END,CABLE.....		EA		1	*	*	*		*	122	28
			5306-151-1961	AN23-9	<88044>	..BOLT,CLEVIS.....		EA		1	*	*	*		*	122	29
			5310-877-5797	MS21044N3	<96906>	..NUT,SELF-LOCKING,HEXAGON...		EA		1	*	*	*		*	122	
P	F		1560-672-3559	S1650-62166	<78286>	..PLATE,FUSELAGE FORWARD.....		EA		1	*	*	*		*	122	30
P	F		1680-544-0918	S1650-62158	<78286>	..SPRING,HELICAL,EXTENSION...		EA		1	2	3	6		*	122	31
P	O		1680-497-6279	933585	<33525>	..PULLEY,ASSEMBLY..... ATTACHING PARTS		EA		1	*	*	2		*	122	32
			5306-637-1665	AN24-17	<88044>	..BOLT,CLEVIS.....		HD		1	*	*	*		*	122	33
			5310-187-2354	AN960PD416	<88044>	..WASHER,FLAT.....		HD		2	*	*	*		*	122	
			5310-176-8108	AN320-4	<88044>	..NUT,SLOTTED,HEXAGON.....		HD		1	*	*	*		*	122	
			5315-234-1856	MS24665-155	<96906>	..PIN,COTTER.....		HD		1	*	*	*		*	122	
						---*---											
P	F		1560-866-6006	S1650-62156-7	<78286>	..CONTROL ASSEMBLY USBL EFF. 53-4475 THRU 55-4504		EA		1	*	*	*		*	122	
P	F		1560-991-8961	S1650-62156-10	<78286>	..CONTROL ASSEMBLY,CARGO..... SLING		EA		1	*	2	2		*	122	34
AF	O			S1650-62155-3	<78286>	.CONTROL AND PULLEY ASSEMBLY.		EA		1						122	
P	O		1680-497-6279	933585	<33525>	..PULLEY,ASSEMBLY..... ATTACHING PARTS		EA		1	*	*	REF		REF	122	35
			5306-637-1665	AN24-17	<88044>	..BOLT,CLEVIS.....		HD		1	*	*	*		*	122	36
			5310-187-2354	AN960PD416	<88044>	..WASHER,FLAT.....		HD		2	*	*	*		*	122	
			5310-176-8108	AN320-4	<88044>	..NUT,SLOTTED,HEXAGON.....		HD		1	*	*	*		*	122	
			5315-234-1856	MS24665-155	<96906>	..PIN,COTTER.....		HD		1	*	*	*		*	122	
						---*---											
P	F		3940-624-8281	S1650-62155-2	<78286>	..PULLEY..... ATTACHING PARTS		EA		1	*	*	*		*	122	37
			5306-156-2702	AN24-18	<88044>	..BOLT,CLEVIS.....		EA		1	*	*	*		*	122	38
			5310-187-2354	AN960PD416	<88044>	..WASHER,FLAT.....		HD		2	*	*	*		*	122	
			5310-176-8108	AN320-4	<88044>	..NUT,SLOTTED,HEXAGON.....		HD		1	*	*	*		*	122	
			5315-234-1856	MS24665-155	<96906>	..PIN,COTTER.....		HD		1	*	*	*		*	122	
						---*---											
			1560-544-0944	S1650-62156-2	<78286>	..CONTROL ASSEMBLY RPL-BY... 1560-991-8964										122	

(1) SOURCE, MAINT AND REC CODE (a) SOURCE	(b) MAINT	(c) REC	(2) FEDERAL STOCK NUMBER	REFERENCE NUMBER		(3) DESCRIPTION	MODELS USABLE ON CH-34C	(4) UNIT OF ISSUE	(5) QTY INC IN UNIT PACK	(6) QTY INC IN UNIT	(7) 30-DAY DS GS MAINT ALW (a) 1-20	(b) 21-50	(c) 51-100	(8) 1-YR ALW PER 100 EQUIP CNTGCY	(9) DEPOT MAINT ALW PER 100 EQUIP	(10) ILLUSTRATION (a) FIG NO	(b) ITEM NO
P	F		1560-991-8964	S1650-62156-8	<78286>	..CONTROL ASSEMBLY..... RPLS-- 1560-544-0944		EA		2	*	2	2		*	122	40
P	F		1560-991-0352	S1650-62156-9	<78286>	..CABLE ASSEMBLY,CARGO..... SLING CONTROL INSTALLATION		EA		1	*	*	2		*	122	
P	F		1560-623-6190	S1650-62156-6	<78286>	..CONTROL ASSEMBLY,CARGO.....		EA		1		*	*		*	122	
				S1650-62165	<78286>	.BRACKET INSTALLATION.....				1						122	
P	F		1560-587-6295	S1650-62165-1	<78286>	..BRACKET ASSEMBLY USBL EFF. 53-4475 THRU 55-4504		EA		1	*	*	*		*	122	41
				S1650-62164	<78286>	.DOUBLER AND BRACKET..... INSTALLATION				1						122	
P	F		1560-654-3180	S1650-62164-2	<78286>	..BRACKET,PULLEY..... ATTACHING PARTS		EA		1	*	*	*		*	122	43
				MS20470AD4	<96906>	..RIVET..... ---*---		EA		4						122	44
MF	F			S1650-62164-1	<78286>	.PLATE,DOUBLER..... MAKEFR AR 9535-554-1415 AL ALLY SH		EA		1						122	45
				S1650-62157	<78286>	.BRACKET INSTALLATION.....				1						122	
P	F		1560-587-6299	S1650-62157-1	<78286>	..BRACKET,CARGO SLING,..... EMERGENCY		EA		1	*	*	*		*	122	48
P	F		1560-587-6300	S1650-62157-2	<78286>	..ANGLE,CARGO SLING..... ATTACHING PARTS		EA		1	*	*	*		*	122	50
				MS20470AD4	<96906>	..RIVET..... ---*---		EA		3						122	51
				S1650-62185	<78286>	.ACTUATOR INSTALLATION..... CARGO SLING				1						122	
X2	F		1560-567-1119	S1650-62185-4	<78286>	..LEVER,CARGO SLING,..... EMERGENCY RPLS-- 1560-586-6797 ATTACHING PARTS		EA		1	*	*	*		*	122	52
			5306-151-1963	AN23-11	<88044>	..BOLT,CLEVIS.....		EA		1	*	*	*		*	122	53
			5310-183-4406	AN960PD10	<88044>	..WASHER,FLAT.....		HD		2	*	*	*		*	122	
			5310-285-2177	AN320-3	<88044>	..NUT,SLOTTED,HEXAGON.....		HD		1	*	*	*		*	122	
			5315-234-1856	MS24665-155	<96906>	..PIN,COTTER.....		HD		1	*	*	*		*	122	
			5306-151-1962	AN23-10	<88044>	..BOLT,CLEVIS.....		EA		1	*	*	*		*	122	54
			5310-167-0753	AN960PD10L	<88044>	..WASHER,FLAT.....		HD		3	*	*	*		*	122	
			5310-285-2177	AN320-3	<88044>	..NUT,SLOTTED,HEXAGON.....		HD		1	*	*	*		*	122	
			5315-234-1856	MS24665-155	<96906>	..PIN,COTTER..... ---*---		HD		1	*	*	*		*	122	
P	F		1560-328-4859	S1650-62185-5	<78286>	..BRACKET,CARGO SLING,..... EMERGENCY		EA		1	*	*	*		*	122	55
P	F		1560-328-4861	S1650-62185-6	<78286>	..BRACKET,CARGO SLING,..... EMERGENCY ATTACHING PARTS		EA		1	*	*	*		*	122	56
			5305-989-7435	MS35207-204	<96906>	..SCREW,MACHINE.....		HD		2	*	*	*		*	122	57
			5310-167-0753	AN960PD10L	<88044>	..WASHER,FLAT.....		HD		2	*	*	*		*	122	
			5310-183-4406	AN960PD10	<88044>	..WASHER,FLAT.....		HD		2	*	*	*		*	122	
			5310-877-5797	MS21044N3	<96906>	..NUT,SELF-LOCKING,HEXAGON... ---*---		EA		2	*	*	*		*	122	
P	F		1680-332-4941	S1650-62185-1	<78286>	..ACTUATOR ASSEMBLY RPLS.... 1560-586-6795		EA		1	*	*	*		*	122	58

(1) SOURCE, MAINT AND REC CODE (a) SOURCE CODE	(b) MAINT LEVEL	(c) RLC CODE	(2) FEDERAL STOCK NUMBER	REFERENCE NUMBER	(3) DESCRIPTION	MODELS USABLE ON CH-34C	(4) UNIT OF ISSUE	(5) QTY INC IN UNIT PACK	(6) QTY INC IN UNIT	(7) 30-DAY DS GS MAINT ALW (a) 1-20	(b) 21-50	(c) 51-100	(8) 1-YR ALW PER 100 EQUIP CNTGCY	(9) DEPOT MAINT ALW PER 100 EQUIP	(10) ILLUSTRATION (a) FIG NO	(b) ITEM NO
					CONTINUED										122	58
					ATTACHING PARTS											
			5305-151-0581	AN526-832R18 <88044>	..SCREW,MACHINE.....		HD		1	*	*	*		*	122	59
			5310-184-8966	AN960PD8 <88044>	..WASHER,FLAT.....		HD		10	*	*	*		*	122	
			5310-811-3494	MS21044N08 <96906>	..NUT,SELF-LOCKING,HEXAGON...		EA		1	*	*	*		*	122	
					---*---											
P	F		1560-663-2937	S14-50-2498 <78286>	..SPRING,HELICAL,.....		EA		1	*	*	*		*	122	60
X2	F			S1650-62185-2 <78286>	..SPACER RPLS--.....		EA		1						122	61
					1560-516-5911											
X2	F		1560-328-4858	S1650-62185-3 <78286>	..FITTING-GUIDE.....		EA		1	*	*	*		*	122	62
					ATTACHING PARTS											
			5305-957-7811	MS24693S272 <88044>	..SCREW,MACHINE.....		HD		4	*	*	*		*	122	63
			5310-167-0753	AN960PD10L <88044>	..WASHER,FLAT.....		HD		4	*	*	*		*	122	
			5310-877-5797	MS21044N3 <96906>	..NUT,SELF-LOCKING,HEXAGON...		EA		4	*	*	*		*	122	
					---*---											
				S1650-62163 <78286>	..BRACKET INSTALLATION.....				1						122	
P	F		1560-570-4065	S1650-62163-2 <78286>	...BRACKET,ANGLE RPLS--.....		EA		1	*	*	*		*	122	64
					1560-567-5356											
P	F		1560-570-4065	S1650-62163-2 <78286>	...BRACKET,ANGLE RPLS--.....		EA		1	*	*	*		REF	122	66
					1560-567-5356											
P	H		1560-715-7864	AA6000-3 <78286>	REPAIR KIT,CARGO HOOK U/O...		EA		1	*	*	*	2	*	122	
					1680-708-2341											
					SEE FUNCTIONAL GROUP 50											
					FOR COMPONENTS											
				S1650-61850-2 <78286>	HEATING SYSTEM INSTALLATION..										123	
					SEE FIG.115 FOR NHA											
				S1650-61870-4 <78286>	.DUCT INSTALLATION-.....				1						123	
					CARBURETOR PRE-HEAT											
P	F		1560-611-7230	S1650-61871-3 <78286>	..CONNECTOR ASSEMBLY.....		EA		1	*	*	*		*	123	1
					ATTACHING PARTS											
				4265-492-5 <98625>	..CLAMP.....		EA		1						123	2
					---*---											
			5340-685-0688	NAS437-5B <80205>	..CLAMP LOOP.....		EA		1	*	*	*		*	123	
P	F		5340-639-0649	S1650-61881 <78286>	..CLAMP,LOOP.....		EA		1	*	*	*		*	123	3
					ATTACHING PARTS											
			5305-989-7434	MS35207-263 <96906>	..SCREW,MACHINE.....				1	*	*	*		*	123	4
			5310-183-4406	AN960PD10 <88044>	..WASHER,FLAT.....		HD		1	*	*	*		*	123	
			5310-877-5797	MS21044N3 <96906>	..NUT,SELF-LOCKING,HEXAGON...		EA		1	*	*	*		*	123	
					---*---											
P	O		1560-614-7956	FT968-2 <83144>	..DUCT ASSEMBLY.....		EA		1	*	*	2		*	123	5
P	O		1560-614-7954	FT969-2 <83144>	..DUCT ASSEMBLY.....		EA		1	*	2	2		*	123	
P	F		1560-591-0560	S1650-61873-2 <78286>	..DOOR ASSEMBLY,CARBURETOR...		EA		1	*	*	*		REF	123	8
					INDUCTION HEAT											
P	F		1560-731-7925	S1650-66008 <78286>	...STIFFENER-CARBURETOR.....		EA		1	*	*	*		REF	123	
					INDUCTION HEAT											
P	F		1560-620-9527	FT1000-2 <83144>	..DUCT ASSEMBLY.....		EA		1	*	*	2		*	123	8A

(1) SOURCE, MAINT AND REC CODE (a) SOURCE CODE	(b) MAINT CATEGORY	(c) REC CODE	(2) FEDERAL STOCK NUMBER	REFERENCE NUMBER		(3) DESCRIPTION	MODELS USABLE ON CH-34C	(4) UNIT OF ISSUE	(5) QTY INC IN UNIT PACK	(6) QTY INC IN UNIT	(7) 30-DAY DS GS MAINT ALW (a) 1-20	(b) 21-50	(c) 51-100	(8) 1-YR ALW PER 100 EQUIP CNTGCY	(9) DEPOT MAINT ALW PER 100 EQUIP	(10) ILLUSTRATION (a) FIG NO	(b) ITEM NO
				S1650-66046-1	<78286>	.DEFROSTER INSTALLATION-LH...				1						123	
				S1650-66046-2	<78286>	.DEFROSTER INSTALLATION-RH...				1						123	
P	O		4720-613-9694	S1650-66047	<78286>	..DUCT,WINDSHIELD DEFROSTER.. ATTACHING PARTS		EA		1	2	2	3		*	123	9
			4730-278-9100	AN737RM56	<88044>	..CLAMP,HOSE..... ---*---		EA		2	*	*	*		*	123	10
P	F		1660-639-0616	S1650-61948	<78286>	..NOZZLE ASSEMBLY,HEATING.... SYSTEM		EA		1	*	*	*		*	123	11
P	F		1560-613-9620	S1650-61876-3	<78286>	.DUCT ASSEMBLY,DISTRIBUTION.. CODE B		EA		1	*	*	*		*	123	
P	F		1560-613-9621	S1650-61876-4	<78286>	.DUCT ASSEMBLY,DISTRIBUTION.. RPLS-- PN S1650-61879-2 CODE B		EA		1	*	*	*		*	123	
				S1650-61879-1	<78286>	..DAMPER ASSEMBLY..... RPL-BY 1660-075-1897										123	
P	F		1660-075-1897	S1650-66091-1	<78286>	..DAMPER ASSEMBLY..... RPLS-- PN S1650-61879-1		EA		1	*	*	*		*	123	
P	F		1660-054-3575	S1650-66091-2	<78286>	..DAMPER ASSEMBLY..... ATTACHING PARTS		EA		1	*	*	*		*	123	
P	F		5320-582-3273	RV250-4-1	<98996>	..RIVET,BLIND..... ---*---		EA		10	*	*	*		*	123	14
P	O		1560-591-6545	S1650-66045-11	<78286>	...KNOB,HEAT DISTRIBUTION.... ATTACHING PARTS		EA		1	*	2	2		*	123	15
P	O		5315-960-0007	125-0625LBS	<02108>	...PIN,SPIRAL..... ---*---		EA		1	*	*	*		*	123	16
X1				S1650-61894-23	<78286>	..DIFFUSER ASSEMBLY-LH..... CODE B		EA		1						123	19
X1				S1650-61894-24	<78286>	..DIFFUSER ASSEMBLY-RH..... CODE B		EA		1						123	
P	O		1560-334-6425	S1650-61826	<78286>	..DUCT,DEFROSTER,FLEXIBLE.... ATTACHING PARTS		EA		2	*	2	2		*	123	20
			4730-278-9100	AN737RM56	<88044>	..CLAMP,HOSE.....		EA		1	*	*	*		*	123	21
P	F		1680-315-4079	7-5WHFDL	<03496>	..DIFFUSER,AIR,AIRCRAFT..... HEATING AND VENTILATOR CODE A		EA		1	*	*	2		*	123	24
P	F		1680-315-4080	7-5WHFDR	<03496>	..DIFFUSER,AIR,AIRCRAFT..... HEATING AND VENTILATOR RPLS-- 1680-587-6454 CODE A		EA		1	*	*	*		*	123	
			5305-052-9956	MS24619-14	<96906>	ATTACHING PARTS ..SCREW,TAPPING,THREAD..... FORMING		EA		5	*	*	*		*	123	25
			5310-141-3022	NAS395-6-3	<80205>	..NUT,SHEET SPRING..... ---*---		EA		5	*	*	*		*	123	
P	F		1560-520-6326	S1650-61863-3	<78286>	..DUCT,COCKPIT,HEATING..... CODE A		EA		1	*	*	*		*	123	32
P	F		1560-520-6327	S1650-61863-4	<78286>	..DUCT,COCKPIT HEATING..... RPLS-- 1660-626-7337 CODE A		EA		1	*	*	*		*	123	
				S1650-66015	<78286>	.ADAPTER INSTALLATION-LH.....				1						123	
				S1650-61878	<78286>	.ADAPTER INSTALLATION-RH.....				1						123	
P	F		1560-591-6698	S1650-61872-3	<78286>	..ADAPTER ASSEMBLY-LH.....		EA		1	*	*	*		*	123	

(1) SOURCE, MAINT AND REC CODE (a) SOURCE CODE	(b) MAINT LEVEL	(c) REC CODE	(2) FEDERAL STOCK NUMBER	REFERENCE NUMBER	(3) DESCRIPTION	MODELS USABLE ON CH-34C	(4) UNIT OF ISSUE	(5) QTY INC IN UNIT PACK	(6) QTY INC IN UNIT	(7) 30 DAY DS GS MAINT ALW (a) 1-20	(b) 21-50	(c) 51-100	(8) YR ALW PER 100 EQUIP CNTGCY	(9) DEPOT MAINT ALW PER 100 EQUIP	(10) ILLUSTRATION (a) FIG NO	(b) ITEM NO
P	F		1560-613-1260	S1650-66015-1	<78286> ..ADAPTER ASSEMBLY-LH.....		EA		1	*	*	*		*	123	33
P	F		1560-334-6419	S1650-61823-4	<78286> ..ADAPTER,HEAT DISTRIBUTION.. SYSTEM OBSLTS 1560-334-6418		EA		1	*	*	*		*	123	
P	F		1560-613-1302	S1650-61878-1	<78286> ..ADAPTER,HEAT DISTRIBUTION.. SYSTEM		EA		1	*	*	*		*	123	
					ATTACHING PARTS											
			5305-286-0213	AN525-832R10	<88044> ..SCREW,MACHINE.....		HD		1	*	*	*		*	123	34
			5310-184-8966	AN960PD8	<88044> ..WASHER,FLAT.....		HD		2	*	*	*		*	123	
			5310-807-1466	MS21042-08	<96906> ..NUT,SELF-LOCKING,HEXAGON...				1	*	*	*		*	123	
					---*---											
P	O		1560-613-9657	S1650-66015-3	<78286> ...CLIP ASSEMBLY.....		EA		1	*	*	*		*	123	35
					ATTACHING PARTS											
				MS20470AD4	<96906> ...RIVET.....		EA		2						123	36
					---*---											
				S1650-61825-33	<78286> .DUCT INSTALLATION-LH.....				1						123	
				S1650-61825-32	<78286> .DUCT INSTALLATION-RH.....				1						123	
P	O		1680-572-6473	82495-1	<03496> ..DIFFUSER USBL EFF..... 53-4475 THRU 56-4312		EA		1	*	2	2		*	123	37
P	F		1680-626-1993	90310	<03496> ..DIFFUSER USBL EFF..... 56-4313 AND SUBSEQUENT		EA		1	*	*	2		*	123	
					ATTACHING PARTS											
			5305-052-9957	MS24619-15	<88044> ..SCREW,TAPPING,THREAD..... FORMING		EA		12	*	*	*		*	123	38
			1560-334-6422	S1650-61825-7	<78286> ..DUCT ASSEMBLY,HEATING..... DISTRIBUTION SYSTEM RPL-BY 1560-572-8284										123	
P	F		1560-572-8284	S1650-61825-36	<78286> ..DUCT ASSEMBLY,HEATING..... DISTRIBUTION SYSTEM RPLS-- 1560-334-6422		EA		1	*	*	*		*	123	41
			1560-334-6423	S1650-61825-8	<78286> ..DUCT ASSEMBLY,HEATING..... DISTRIBUTION SYSTEM RPL-BY 1560-572-8288		EA		1						123	
P	F		1560-572-8288	S1650-61825-37	<78286> ..DUCT ASSEMBLY,HEATING..... DISTRIBUTION SYSTEM RPLS-- 1560-334-6423		EA		1	*	*	*		*	123	42
					ATTACHING PARTS											
			5305-057-9613	MS24621-32	<96906> ..SCREW,TAPPING,THREAD..... FORMING		EA		12	*	*	*		*	123	43
			5310-184-8966	AN960PD8	<88044> ..WASHER,FLAT.....		HD		24	*	*	*		*	123	
			5310-276-1117	NAS464-4-3	<80205> ..NUT,SHEET SPRING.....		HD		12	*	*	*		*	123	
					---*---											
			1560-334-6421	S1650-61825-5	<78286> ..DUCT ASSEMBLY,HEATING..... DISTRIBUTION SYSTEM RPL-BY 1560-572-8285										123	
P	F		1560-572-8285	S1650-61825-34	<78286> ..DUCT ASSEMBLY,HEATING..... DISTRIBUTION SYSTEM RPLS-- 1560-334-6421		EA		1	*	*	*		*	123	44
			1560-336-7960	S1650-61825-6	<78286> ..DUCT ASSEMBLY,HEATING..... DISTRIBUTION SYSTEM RPL-BY 1560-572-8287										123	
P	F		1560-572-8287	S1650-61825-35	<78286> ..DUCT ASSEMBLY,HEATING.....		EA		1	*	*	*		*	123	45

(1) SOURCE, MAINT AND REC CODE (a) SOURCE CODE	(b) MAINT CODE	(c) RECV CODE	(2) FEDERAL STOCK NUMBER	REFERENCE NUMBER		(3) DESCRIPTION	MODELS USABLE ON CH-34C	(4) UNIT OF ISSUE	(5) QTY INC IN UNIT PACK	(6) QTY INC IN UNIT	(7) 30-DAY DS GS MAINT ALW (a) 1-20	(b) 21-50	(c) 51-100	(8) 1-YR ALW PER 100 EQUIP CNTGCY	(9) DEPOT MAINT ALW PER 100 EQUIP	(10) ILLUSTRATION (a) FIG NO	(b) ITEM NO
						CONTINUED										123	45
						DISTRIBUTION SYSTEM											
						RPLS-- 1560-336-7960											
						ATTACHING PARTS											
			5305-057-9613	MS24621-32	<96906>	..SCREW,TAPPING,THREAD.....		EA		24	*	*	*		*	123	46
						FORMING											
			5310-184-8966	AN960PD8	<88044>	..WASHER,FLAT.....		HD		28	*	*	*		*	123	
			5310-276-1117	NAS446-4-3	<80205>	..NUT,SHEET SPRING.....		HD		24	*	*	*		*	123	
						---*---											
			1560-334-6424	S1650-61825-9	<78286>	..DUCT ASSEMBLY,HEATING.....										123	
						DISTRIBUTION SYSTEM											
						RPL-BY 1560-572-8286											
P	F		1560-572-8286	S1650-61825-38	<78286>	..DUCT ASSEMBLY,HEATING.....		EA		1	*	*	2		*	123	47
						DISTRIBUTION SYSTEM											
						RPLS-- 1560-334-6424											
			1560-334-6420	S1650-61825-10	<78286>	..DUCT ASSEMBLY,HEATING.....		EA		1						123	
						DISTRIBUTION SYSTEM											
						RPL-BY 1560-572-8289											
P	F		1560-572-8289	S1650-61825-39	<78286>	..DUCT ASSEMBLY,HEATING.....		EA		1	*	*	*		*	123	48
						DISTRIBUTION SYSTEM											
						RPLS-- 1560-334-6420											
						ATTACHING PARTS											
			5305-057-9613	MS24621-32	<96906>	..SCREW,TAPPING,THREAD.....		EA		18	*	*	*		*	123	49
						FORMING											
			5310-184-8966	AN960PD8	<88044>	..WASHER,FLAT.....		HD		36	*	*	*		*	123	
			5310-276-1117	NAS446-4-3	<80205>	..NUT,SHEET SPRING.....		HD		18	*	*	*		*	123	
						---*---											
				S1650-61836	<78286>	.HEATING SYSTEM,FUEL SYSTEM..				1						123	50
						INSTALLATION SEE FIG.											
						124 FOR BREAKDOWN											
				S1650-61851	<78286>	.HEATER INSTALLATION.....				1						123	
AF	F			S1650-61851-15	<78286>	..TUBE ASSEMBLY.....		EA		1						123	51
			4730-142-2167	AN818-6D	<88044>	...NUT,TUBE COUPLING.....		EA		2	*	*	*		*	123	52
			4730-278-6070	MS20819-6D	<96906>	...SLEEVE,FLARED,TUBE FITTING		EA		2	*	*	*		*	123	53
MF	F			S1650-61851-16	<78286>	...TUBE.....		EA		1						123	54
						MAKEFR											
						AR 4710-279-0955 TUBE											
			4730-196-9580	AN816-6D	<88044>	..ADAPTER,STRAIGHT PIPE.....		EA		1	*	*	*		*	123	55
P	F		1560-676-3431	S1650-61860-2	<78286>	..EXHAUST,HEATER RPLS--.....		EA		1	*	*	*		*	123	56
						1560-770-4656											
						ATTACHING PARTS											
P	F		1660-533-2411	A09C33	<58588>	..CLAMP,ASSEMBLY,FLANGE.....		EA		1	*	*	2		*	123	57
						---*---											
P	F		1560-334-6426	S1650-61853	<78286>	..DUCT,HEATING SYSTEM.....		EA		1	*	*	2		*	123	58
						COMBUSTION AIR INTAKE											
						ATTACHING PARTS											
P	F		4730-142-2060	820-14	<98625>	..CLAMP,HOSE.....		EA		2	*	*	*		*	123	59
						---*---											
X2	F		1660-626-4774	S1650-66073	<78286>	..ELBOW.....		EA		1	*	*	*		*	123	60
						ATTACHING PARTS											
P	F		5340-628-5580	320-625-2-063S	<98625>	..CLAMP.....		EA		1	*	*	*		*	123	61
						---*---											

(1) SOURCE, MAINT AND REC CODE (a) SOURCE CODE	(b) MAINT LEVEL	(c) REC CODE	(2) FEDERAL STOCK NUMBER	REFERENCE NUMBER		(3) DESCRIPTION	MODELS USABLE ON CH-34C	(4) UNIT OF ISSUE	(5) QTY INC IN UNIT PACK	(6) QTY INC IN UNIT	(7) 30-DAY DS GS MAINT ALW (a) 1-20	(b) 21-50	(c) 51-100	(8) 1-YR ALW PER 100 EQUIP CNTGCY	(9) DEPOT MAINT ALW PER 100 EQUIP	(10) ILLUSTRATION (a) FIG NO	(b) ITEM NO
			5310-167-1300	AN316-6R	<88044>	...NUT,PLAIN,HEXAGON.....		HD		2	*	*	*		*	123	64
X2	F		5305-562-4974	S1550-63046-5	<78286>	...SCREW.....		EA		2	*	*	*		*	123	65
P	F		3110-761-3726	SS4A	<40920>	...BEARING,BALL ANNULAR.....		EA		2	*	*	*		*	123	66
P	F		1660-510-2418	E02C96	<58588>	..LEAD ASSEMBLY,SHIELDED.....		EA		1	*	*	*		*	123	67
AF	F			S1650-61857-1	<78286>	..PLATE ASSEMBLY,COVER.....		EA		1						123	68
						ATTACHING PARTS											
			5305-990-6444	MS35207-261	<96906>	..SCREW,MACHINE.....		HD		8	*	*	*		*	123	69
						---*---											
			5310-187-2402	AN960PD916	<88044>	...WASHER,FLAT.....		HD		1	*	*	*		*	123	71
			5330-804-5695	MS28778-6	<96906>	...PACKING,PREFORMED.....		EA		1	REF	REF	REF		*	123	72
			4730-684-6922	MS24394D6	<96906>	...ELBOW,TUBE.....		EA		1	*	*	*		*	123	73
P	O		1660-308-1052	11C30	<58588>	..IGNITION ASSEMBLY.....		EA		1	*	*	*	5	*	123	75
						SEE FIG.123A FOR											
						BREAKDOWN											
P	F	R	1680-639-0614	X702-181A	<75477>	..FAN,VANE,AXIAL.....		EA		1	*	*	2	7	*	123	
						RPLS-- 4140-516-4558											
						U/W 1560-416-2495											
						SEE FIG.123B FOR											
						BREAKDOWN											
P	O	R	1660-587-6399	M4941A1A	<18965>	..BLOWER ASSEMBLY.....		EA		1	*	*	*	2	*	123	76
						ATTACHING PARTS											
			5306-182-2056	AN3H3A	<88044>	..BOLT,MACHINE.....		HD		2	*	*	*		*	123	77
			5310-183-4406	AN960PD10	<88044>	..WASHER,FLAT.....		HD		4	*	*	*		*	123	
			5310-877-5797	MS21044N3	<96906>	..NUT,SELF-LOCKING,HEXAGON...		EA		2	*	*	*		*	123	
			5306-182-2057	AN3H4A	<88044>	..BOLT,MACHINE.....		HD		12	*	*	*		*	123	78
			5310-183-4406	AN960PD10	<88044>	..WASHER,FLAT.....		HD		24	*	*	*		*	123	
			5310-877-5797	MS21044N3	<96906>	..NUT,SELF-LOCKING,HEXAGON...		EA		12	*	*	*		*	123	
						---*---											
P	F		1560-532-3700	S1650-61831	<78286>	..SCOOP ASSEMBLY.....		EA		1	*	*	*		*	123	79
P	F		1560-673-2050	S1650-61856	<78286>	..ADAPTER ASSEMBLY.....		EA		1	*	*	*		*	123	80
						ATTACHING PARTS											
P	O		1660-572-5429	E07C05	<58588>	..CLAMP,HEATER.....		EA		1	*	*	*		*	123	81
						---*---											
		R	1660-516-6493	23C47	<58588>	..HEATER,AIRCRAFT RPL-BY....										123	
						1660-633-6143											
P	O	R	1660-633-6143	A23C47	<58588>	..HEATER ASSEMBLY RPLS.....		EA		1	*	2	2	22	*	123	82
						1660-516-6493											
						ATTACHING PARTS											
P	O		1660-572-5429	E07C05	<58588>	..CLAMP.....		EA		1	*	*	*		REF	123	83
						---*---											
P	F		1660-166-5509	51A66	<58588>	...GASKET,NOZZLE HOLDER.....		EA		1	*	*	*		*	123	
P	O		1660-167-2613	51A05	<58588>	...ELECTRODE ASSEMBLY,GROUND.		EA		1	*	*	*		*	123	
P	F		1660-166-5511	52A02	<58588>	...GASKET,HEAD.....		EA		1	*	*	*		*	123	
			1660-485-4091	A35A71	<58588>	...GASKET ASSEMBLY.....		EA		1	*	*	*			123	
X2	F		1660-592-8296	26C63	<58588>	...JACKET ASSEMBLY.....		EA		1	*	*	*		*	123	
X2	F		1660-592-8295	26C61	<89513>	...NOZZLE ASSEMBLY.....		EA		1	*	*	*		*	123	
X2	F			26C64	<89513>	...COMBUSTION CHAMBER.....		EA		1						123	
			5310-166-5228	56A14	<58588>	...WASHER,FLAT.....		EA		1	*	*	*		*	123	
X2	F			10C36	<89513>	...ADAPTER.....		EA		1						123	
			5310-264-1059	45A28	<58588>	...WASHER.....		EA		1	*	*	*		*	123	
X2	F			C10C70	<89513>	...TUBE ASSEMBLY.....		EA		1						123	
P	F		5340-291-3537	39A33	<58588>	...PLASTIC CAP NUT.....		EA		1	*	*	*		*	123	

(1) SOURCE, MAINT AND REC CODE (a) SOURCE CODE	(b) MAINT LEVEL	(c) REC LEVEL CODE	(2) FEDERAL STOCK NUMBER	REFERENCE NUMBER		(3) DESCRIPTION	MODELS USABLE ON CH-34C	(4) UNIT OF ISSUE	(5) QTY INC IN UNIT PACK	(6) QTY INC IN UNIT	(7) 30-DAY DSTGS MAINT ALW (a) 1-20	(b) 21-50	(c) 51-100	(8) 1-YR ALW PER 100 EQUIP CNTGCY	(9) DEPOT MAINT ALW PER 100 EQUIP	(10) ILLUSTRATION (a) FIG NO	(b) ITEM NO
			4730-194-1121	AN816-6	<88044>	...ADAPTER,STRAIGHT.....		EA		1	*	*	*		*	123	
			4730-231-4013	MS20822-6	<96906>	...ELBOW,PIPE TO TUBE.....		EA		1	*	*	*		*	123	
			5310-167-0826	AN960-1216		...WASHER,FLAT.....		HD		1	*	*	*		*	123	
			5310-167-0822	AN960-716	<88044>	...WASHER.....		EA		1	*	*	*		*	123	
			5310-806-1831	MS21040-7	<96906>	...NUT,SELF-LOCKING.....		EA		1	*	*	*		*	123	
X2	F			28C45	<89513>	...FEED ASSEMBLY,AIR-TUBE....		EA		1						123	
X2	F			39A37	<89513>	...RIVET.....		EA		1						123	
P	F		1660-449-1415	G36A47	<58588>	...TIP AND STRAINER.....		EA		1	*	*	*		*	123	
X2	F		1560-546-8556	S1650-61858	<78286>	..ADAPTER ASSEMBLY.....		EA		1	*	*	*		*	123	84
						ATTACHING PARTS											
P	F		1660-587-6386	F07C05	<58588>	..CLAMP.....		EA		1	*	2	2	12	*	123	85
						---*---											
X2	F		4730-194-1121	AN816-6	<88044>	...ADAPTER,STRAIGHT,PIPE.....		EA		1	*	*	*		*	123	
P	F		1560-604-5252	S1607-1054	<78286>	..ADAPTER ASSEMBLY.....		EA		1	*	*	*		*	123	
			5930-501-0974	PA904-1	<70152>	..SWITCH ASSEMBLY RPL-BY....										123	
						5930-631-0029											
			5930-654-1537	PG904-1	<70152>	..SWITCH ASSEMBLY RPL-BY....										123	
						5930-631-0029											
P	F		5930-631-0029	75019	<98505>	..SWITCH,PRESSURE RPLS--....		EA		1	*	*	*		*	123	86
						5930-501-0974 &											
						5930-654-1537											
						ATTACHING PARTS											
			5310-183-4406	AN960PD10	<88044>	..WASHER,FLAT.....		HD		3	*	*	*		*	123	87
			5310-877-5797	MS21044N3	<96906>	..NUT,SELF-LOCKING,HEXAGON...		EA		3	*	*	*		*	123	
						---*---											
P	F		1560-605-3175	S1607-1053-1	<78286>	..DUCT ASSEMBLY.....		EA		1	*	*	*		*	123	
P	F		1560-605-9136	S1607-1053-2	<78286>	..DUCT ASSEMBLY.....		EA		1	*	*	*		*	123	
P	F		1560-605-9137	S1607-1053-3	<78286>	..DUCT ASSEMBLY.....		EA		1	*	*	*		*	123	
X2	F		1660-897-9985	S1650-61845	<78286>	..DUCT ASSEMBLY-PLENUM.....		EA		1	*	*	*		*	123	88
						ATTACHING PARTS											
			5306-182-2057	AN3H4A	<88044>	..BOLT,MACHINE.....		HD		10	*	*	*		*	123	89
			5310-183-4406	AN960PD10	<88044>	..WASHER,FLAT.....		HD		10	*	*	*		*	123	
			5310-183-4406	AN960PD10	<88044>	..WASHER,FLAT.....		HD		2	*	*	*		*	123	90
			5310-877-5797	MS21044N3	<96906>	..NUT,SELF-LOCKING,HEXAGON...		EA		2	*	*	*		*	123	
						---*---											
P	O		5930-296-5771	18420-0-150	<73168>	...SWITCH,THERMOSTATIC.....		EA		1	*	*	*		*	123	91
						ATTACHING PARTS											
			5305-984-6193	MS35206-245	<96906>	...SCREW,MACHINE.....		HD		3	*	*	*		*	123	92
						---*---											
P	O		5930-642-9414	18422-0-285	<73168>	...SWITCH,THERMOSTATIC.....		EA		1	*	*	*		*	123	93
						ATTACHING PARTS											
			5305-984-6193	MS35206-245	<96906>	...SCREW,MACHINE.....		HD		3	*	*	*		*	123	94
						---*---											
P	O		5930-504-9964	18423-0-120	<73168>	...SWITCH,THERMOSTATIC.....		EA		1	*	*	*		*	123	95
						ATTACHING PARTS											
			5305-984-6193	MS35206-245	<96906>	...SCREW,MACHINE.....		HD		3	*	*	*		*	123	96
						---*---											
P	O		5930-272-1305	18423-0-350	<73168>	...SWITCH,THERMOSTATIC.....		EA		1	*	*	*		*	123	97
						ATTACHING PARTS											
			5305-984-6193	MS35206-245	<96906>	...SCREW,MACHINE.....		HD		3	*	*	*		*	123	98
						---*---											
MF	F			S1650-61815-3	<78286>	...BRACKET.....		EA		1						123	101

(1) SOURCE, MAINT AND REC CODE (a) SOURCE CODE	(b) MAINT LEVEL	(c) REC CODE	(2) FEDERAL STOCK NUMBER	REFERENCE NUMBER		(3) DESCRIPTION	MODELS USABLE ON CH-34C	(4) UNIT OF ISSUE	(5) QTY INC IN UNIT PACK	(6) QTY INC IN UNIT	(7) 30-DAY DS/GS MAINT ALW (a) 1-20	(b) 21-50	(c) 51-100	(8) 1-YR ALW PER 100 EQUIP CNTGCY	(9) DEPOT MAINT ALW PER 100 EQUIP	(10) ILLUSTRATION (a) FIG NO	(b) ITEM NO
						CONTINUED										123	
						MAKEFR											
						AR 9535-554-1416 AL ALLY SH											
						ATTACHING PARTS											
				MS20470AD4	<96906>	...RIVET.....		EA		3						123	102
						---*---											
P	F		5340-584-6176	SS1050-3	<78286>	...BRACKET,ANGLE.....		EA		4	*	*	*		REF	123	107
						ATTACHING PARTS											
				MS20470AD4	<96906>	....RIVET.....		EA		3						123	108
						---*---											
				MS20470AD4	<96906>	...RIVET.....		EA		8						123	110
						---*---											
X2	F			S1650-61811	<78286>	...ADAPTER.....		EA		1						123	111
						ATTACHING PARTS											
				MS20470AD4	<96906>	...RIVET.....		EA		20						123	112
						---*---											
						CODE A											
						USBL EFF 53-4475 THRU 56-4312											
						CODE B											
						USBL EFF 56-4313 AND											
						SUBSEQUENT											
P	O		1660-308-1052	11C30	<58588>	IGNITION ASSEMBLY SEE FIG...		EA		1	*	*	*	REF	*	123A	
						123 FOR NHA											
P	H		1660-534-7000	14C17	<58588>	.RING,VIBRATOR RETAINING.....		EA		1	*	*	*		*	123A	2
				12C60	<89513>	.VIBRATOR,INTERRUPTER..NOTE 1		EA		1						123A	3
				MT361-1	<82805>	.SHIELD,RADIO NOISE,.....		EA		1						123A	4
						AIRCRAFT NOTE 1											
P	H		1660-534-7001	14C18	<58588>	.COLLAR,VIBRATOR SUPPORT.....		EA		1	*	*	*		*	123A	5
						ATTACHING PARTS											
			5305-687-6724	AN503-6-6	<88044>	.SCREW,MACHINE.....		HD		3	*	*	*		*	123A	6
						---*---											
P	H		5999-655-4263	MT360-1	<82805>	.SHIELD,NOISE.....		EA		1	*	*	*		*	123A	7
			5330-265-1092	MS29513-219	<96906>	.PACKING,PREFORMED.....NOTE 1		EA		1	*	*	*		*	123A	8
			5935-726-0708	MS3102R10SL3P	<96906>	.CONNECTOR,RECEPTACLE,.....		EA		1	*	*	*		*	123A	9
						ELECTRICAL											
						ATTACHING PARTS											
			5305-531-0298	MS35265-15	<96906>	.SCREW,MACHINE.....		HD		4	*	*	*		*	123A	10
						---*---											
P	H		1660-608-4664	14C19	<58588>	.GASKET,CONNECTOR.....		EA		1	*	*	2		*	123A	11
P	H		5935-695-4263	14C20	<58588>	.GASKET,RECEPTACLE ADAPTER...		EA		1	*	*	*		*	123A	14
X2	H			14C09	<58588>	.BODY ASSEMBLY,AIRCRAFT.....		EA		1						123A	
						HEATER											
						ATTACHING PARTS											
			5305-687-6724	AN503-6-6	<88044>	.SCREW,MACHINE.....		HD		3	*	*	*		*	123A	17
						---*---											
P	H		4520-610-6407	13C95	<58588>	..CHANNEL ASSEMBLY.....		EA		1	*	*	*		*	123A	18

(1) SOURCE, MAINT AND REC CODE (a) SOURCE CODE	(b) MAINT LEVEL	(c) REC CODE	(2) FEDERAL STOCK NUMBER	REFERENCE NUMBER		(3) DESCRIPTION	MODELS USABLE ON CH-34C	(4) UNIT OF ISSUE	(5) QTY INC IN UNIT PACK	(6) QTY INC IN UNIT	(7) 30-DAY DS GS MAINT ALW (a) 1-20	(b) 21-50	(c) 51-100	(8) 1-YR ALW PER 100 EQUIP CNTGCY	(9) DEPOT MAINT ALW PER 100 EQUIP	(10) ILLUSTRATION (a) FIG NO	(b) ITEM NO
P	F		5915-652-9095	13C74	<58588>	..FILTER.....		EA		1	*	*	*		*	123A	19
X1				B96A55	<58588>	..SLEEVE,INSULATING.....		EA		1						123A	20
X1				14C08	<58588>	..WIRE,ELECTRICAL.....		EA		1						123A	21
X1				A14C08	<58588>	..WIRE,ELECTRICAL.....		EA		1						123A	22
P	H		5945-502-4095	14C00	<58588>	..RELAY ASSEMBLY.....		EA		1	*	*	*		*	123A	
						ATTACHING PARTS											
			5305-984-4983	MS35206-226	<96906>	..SCREW,MACHINE.....		HD		1	*	*	*		*	123A	23
			5310-045-4007	MS35338-41	<96906>	..WASHER,LOCK.....		HD		1	*	*	*		*	123A	24
						---*---											
P	H		5945-507-9730	13C99	<58588>	...BRACKET,RELAY.....		EA		1	*	*	*		*	123A	25
						ATTACHING PARTS											
			5305-984-4983	MS35206-226	<96906>	...SCREW,MACHINE.....		HD		1	*	*	*		*	123A	26
			5310-045-4007	MS35338-41	<96906>	...WASHER,LOCK.....		HD		1	*	*	*		*	123A	27
						---*---											
P	H		5945-501-9716	89A06	<58588>	...RELAY,ARMATURE.....		EA		1	*	*	*		*	123A	28
P	F		5910-653-6509	14C01	<58588>	..CAPACITOR,FIXED.....		EA		1	*	*	*		*	123A	29
X1				14C07	<58588>	..SLEEVE,INSULATING.....		EA		1						123A	30
X1				A14C07	<58588>	..SLEEVE,INSULATING.....		EA		1						123A	31
P	H		5915-504-6963	13C73	<58588>	..FILTER.....		EA		1	*	*	*		*	123A	32
P	H		1660-347-8239	13C92	<58588>	..BRACKET ASSEMBLY.....		EA		1	*	*	*		*	123A	33
						ATTACHING PARTS											
			5305-687-6724	AN503-6-6	<88044>	..SCREW,MACHINE.....		HD		4	*	*	*		*	123A	34
			5310-045-4007	MS35338-41	<96906>	..WASHER,LOCK.....		HD		4	*	*	*		*	123A	35
						---*---											
P	H		5935-502-3768	13C88	<89513>	..SOCKET ASSEMBLY.....		EA		1	*	*	*	5	*	123A	
P	H		5935-695-4264	13C83	<89513>	...HOLDER,SOCKET.....		EA		1	*	*	*		*	123A	36
X1				13C87	<58588>	...WIRE ASSEMBLY,ELECTRICAL..		EA		1						123A	37
X1				13C86	<58588>	...WIRE,ELECTRICAL.....		EA		1						123A	38
X1				A13C86	<58588>	...WIRE,ELECTRICAL.....		EA		1						123A	39
X1				C13C86	<58588>	...WIRE,ELECTRICAL.....		EA		1						123A	40
P	H		5935-502-3784	68A75	<58588>	...SOCKET,VIBRATOR.....		EA		1	*	*	*		*	123A	41
			5330-194-3711	MS29513-227	<96906>	..PACKING,PREFORMED.....		EA		1	*	*	*		*	123A	42
P	H		1660-534-6999	14C03	<58588>	..SUPPORT,VIBRATOR.....		EA		1	*	*	*		*	123A	43
P	H		1660-566-2548	14C14	<58588>	.COIL ASSEMBLY,IGNITION.....		EA		1	*	*	*		*	123A	
			5310-807-1467	MS21042-3	<96906>	..NUT,EXTENDED WASHER,HEXAGON		HD		1	*	*	*		*	123A	46
			5310-576-5752	MS35333-39	<96906>	..WASHER,LOCK.....		HD		1	*	*	*		*	123A	47
P	H		5340-616-4796	A32C94	<89513>	.CAP,PROTECTIVE,DUST AND.....		EA		1	*	*	*		*	123A	
						MOISTURE SEAL											
P	H		5340-801-1169	C32C94	<89513>	.CAP,PROTECTIVE,DUST AND.....		EA		1	*	*	*		*	123A	
						MOISTURE SEAL											
P	F		1660-716-3441	63C65	<58588>	PARTS KIT,IGNITION ASSEMBLY..		EA		1	*	*	*		*	123A	
						U/O 1660-308-1052 SEE											
						FUNCTIONAL GROUP 50 FOR											
						COMPONENTS											
						NOTE 1											
						COMPONENT OF KIT											
						1660-716-3441											

(1) SOURCE, MAINT AND REC CODE (a) SOURCE CODE	(b) MAINT LEVEL	(c) REC CODE	(2) FEDERAL STOCK NUMBER	REFERENCE NUMBER	(3) DESCRIPTION	MODELS USABLE ON CH-34C	(4) UNIT OF ISSUE	(5) QTY INC IN UNIT PACK	(6) QTY INC IN UNIT	(7) 30 DAY DS GS MAINT ALW (a) 1-20	(b) 2-50	(c) 51-100	(8) 1-YR ALW PER 100 EQUIP CNTGCY	(9) DEPOT MAINT ALW PER 100 EQUIP	(10) ILLUSTRATION (a) FIG NO	(b) ITEM NO
P	O	R	1680-639-0614	X702-181A	<75477> FAN,VANE,AXIAL SEE FIG.123.. FOR NHA		EA		1	*	*	REF	REF		123B	
			5310-052-9734	MS21044E08	<96906> .NUT,SELF-LOCKING,HEXAGON....		EA		2	*	*	*		*	123B	2
			5310-264-1389	AN961-8	<88044> .WASHER,FLAT.....		HD		2	*	*	*		*	123B	3
P	H		5915-070-6906	86224-6	<75477> .TERMINAL,FILTER.....		EA		1	*	*	*		*	123B	4
					ATTACHING PARTS											
			5310-812-3373	MS122057	<96906> .WASHER,LOCK.....		EA		1	*	*	*		*	123B	5
			5310-579-1786	MS20341-416A	<96906> .NUT,PLAIN,HEXAGON.....		HD		1	*	*	*		*	123B	6
					---*---											
P	H		5915-070-6907	FA3154	<81831> .FILTER,RADIO NOISE.....		EA		1	*	*	*		*	123B	7
					ATTACHING PARTS											
			5305-145-7016	AN503-10-6	<88044> .SCREW,MACHINE.....		EA		4	*	*	*		*	123B	8
			5310-167-0662	MS35337-43	<96906> .WASHER,LOCK.....		HD		4	*	*	*		*	123B	9
					---*---											
			5940-204-9142	MS25036-12	<96906> .TERMINAL,LUG.....		HD		1	*	*	*		*	123B	10
P	H		5940-329-5800	86223-24	<75477> .FERRULE,TERMINAL		PG		1	*	*	*		*	123B	11
			5940-660-3634	MS25036-57	<96906> .TERMINAL,LUG.....		EA		2	*	*	*		*	123B	12
					ATTACHING PARTS											
			5310-579-1786	MS20341-416A	<96906> .NUT,PLAIN,HEXAGON.....		HD		2	*	*	*		*	123B	13
			5310-167-0667	MS35337-44	<96906> .WASHER,LOCK.....		HD		2	*	*	*		*	123B	14
			5305-531-0202	MS35214-73	<96906> .SCREW,MACHINE.....		EA		1	*	*	*		*	123B	15
					---*---											
			5325-174-5316	MS35489-2	<96906> .GROMMET,RUBBER.....		EA		1	*	*	*		*	123B	16
P	H		5940-329-5800	86223-24	<75477> .FERRULE,TERMINAL		PG		1	*	*	*		*	123B	17
P	H		1660-699-0226	88355	<75477> .NOSE SPUN,VANE AXIAL FAN....		EA		1	*	*	*		*	123B	18
					ATTACHING PARTS											
			5310-877-5795	MS21044N8	<96906> .NUT,SELF-LOCKING,HEXAGON....		EA		1	*	*	*		*	123B	19
P	H		5310-638-0546	77106	<75477> .WASHER,FLAT.....		EA		1	*	*	*		*	123B	20
					---*---											
P	H		4140-654-9146	78698-2	<75477> .IMPELLER,FAN,AXIAL.....		EA		1	*	*	*		*	123B	21
P	H		6105-635-5508	A28A8639-2	<88109> .MOTOR,DIRECT CURRENT SEE... FIG.123B <SHEET 2 OF 2> FOR BREAKDOWN		EA		1	*	*	*		*	123B	23
			5305-271-7778	AN503-8-10	<88044> .SCREW,MACHINE.....		HD		4	*	*	*		*	123B	24
			5310-045-3299	MS35338-42	<96906> .WASHER,LOCK.....		HD		4	*	*	*		*	123B	25
			5305-253-5607	MS21318-8	<96906> .SCREW,DRIVE.....		HD		2	*	*	*		*	123B	27
X2	H			A88564-1	<75477> .CASING ASSEMBLY.....		EA		1						123B	28
			5305-811-9853	MS35265-12	<96906> ..SCREW,MACHINE.....		HD		4	*	*	*		*	123B	30
			5310-551-7770	MS35337-40	<96906> ..WASHER,LOCK.....		EA		4	*	*	*		*	123B	31
P	H		5950-204-5886	P21D4814	<83843> ..CONTACT,ELECTRICAL.....		EA		1	*	*	*		*	123B	32
			5320-800-5704	MS16535-64	<96906> ..RIVET,TUBULAR.....		MX		2	*	*	*		*	123B	33
P	H		6105-305-6771	A19C7440	<83843> ...COVER,ELECTRIC MOTOR.....		EA		1	*	*	*		*	123B	34
P	H		5977-284-7640	P21D4815	<83843> ..BRUSH,ELECTRIC,CONTACT.....		EA		1	*	*	*		*	123B	35
P	H		6150-635-8335	P8C7806	<83843> ..FAN,ELECTRICAL.....		EA		1	*	*	*		*	123B	36
					ATTACHING PARTS											
			5305-719-5330	MS51963-21	<96906> ..SETSCREW.....		EA		2	*	*	*		*	123B	37
					---*---											
P	H		5977-285-0954	P8C5769	<83843> ..BRUSH,ELECTRIC,CONTACT.....		EA		4	*	*	*		*	123B	38
					ATTACHING PARTS											
			5310-807-1466	MS21042-08	<96906> ..NUT,EXTENDED WASHER.....		HD		4	*	*	*		*	123B	39
					---*---											
P	H		5325-292-0295	P22D9897	<83843> ..GROMMET,LEAD EXIT.....		EA		1	*	*	*		*	123B	42

(1) SOURCE, MAINT AND REC CODE (a) SOURCE CODE	(b) MAINT LEVEL	(c) REC CODE	(2) FEDERAL STOCK NUMBER	REFERENCE NUMBER	(3) DESCRIPTION	MODELS USABLE ON CH-34C	(4) UNIT OF ISSUE	(5) QTY INC IN UNIT PACK	(6) QTY INC IN UNIT	(7) 30-DAY DS/GS MAINT ALW (a) 1-20	(b) 21-50	(c) 51-100	(8) 1-YR ALW PER 100 EQUIP CNTGCY	(9) DEPOT MAINT ALW PER 100 EQUIP	(10) ILLUSTRATION (a) FIG NO	(b) ITEM NO
			5310-167-0834	AN960-10L	<88044> ..WASHER,FLAT.....		HD		4	*	*	*		*	123B	44
P	H		5310-596-0013	P15D6402	<83843> ..WASHER,SPRING TENSION.....		EA		1	*	*	*		*	123B	45
P	H		3110-144-8989	R9ZJHT2	<52676> ...BEARING,BALL,ANNULAR.....		EA		1	*	*	*		*	123B	47
P	H		3110-686-1363	39FL1-05A323A60	<38443> ...BEARING,BALL,ANNULAR.....		EA		1	*	*	*		*	123B	
P	H		3110-702-0561	203KDDFS118	<21335> ...BEARING,BALL,ANNULAR.....		EA		1	*	*	*		*	123B	48
P	H		3110-686-1364	6603-2ZJ1HT2	<52676> ...BEARING,BALL,ANNULAR.....		EA		1	*	*	*		*	123B	
P	H		6105-635-0668	A2848664	<83843> ...ARMATURE,MOTOR.....		EA		1	*	*	*		*	123B	49
X2	H			909C213-1	<83843> ..STATOR,MOTOR.....		EA		1						123B	50
P	H		6105-035-4926	P15C8289	<79500> ..CAP,BEARING.....		EA		1	*	*	*		*	123B	51
					ATTACHING PARTS											
			5305-687-6724	AN503-6-6	<88044> ..SCREW,MACHINE.....		HD		2	*	*	*		*	123B	52
			5310-167-0832	AN960-6L	<88044> ..WASHER,FLAT.....		HD		2	*	*	*		*	123B	53
					---*---											
P	H		5977-217-0602	A2382339	<79500> ..HOLDER ASSEMBLY.....		EA		1	*	*	*		*	123B	54
					ATTACHING PARTS											
P	H		6105-337-4439	P24D4062	<83843> ..NUT,PLAIN.....		EA		2	*	*	*		*	123B	55
			5305-271-7776	AN503-8-10	<88044> ..SCREW,MACHINE.....		HD		2	*	*	*		*	123B	56
			5310-515-8058	AN960-8	<88044> ..WASHER,FLAT.....		HD		2	*	*	*		*	123B	57
					---*---											
P	H		5340-187-2853	P5C8761	<83843> ...SPRING.....		EA		4	*	*	*		*	123B	58
X1				P8C5974	<83843> ...SPRING.....		EA		4						123B	59
				S1650-61836	<78286> HEATING SYSTEM,FUEL SYSTEM...										124	
					INSTALLATION SEE FIG.123											
					FOR NHA											
MF	O			S1650-61840-1	<78286> .TUBE ASSEMBLY.....		EA		1						124	1
					NOTE 1											
MF	F			S1650-61840-2	<78286> ..TUBE.....NOTE 2		EA		1						124	4
			5310-282-7823	MS24400D4	<96906> .NUT,PLAIN,HEXAGON.....		LL		1	*	*	*		*	124	5
			4730-725-4351	MS24394D4	<96906> .ELBOW,TUBE.....		EA		1	*	*	*		*	124	
P	F		4730-611-7283	S1650-61834-8	<78286> .STRAINER ASSEMBLY,FUEL.....		EA		1	*	*	*		*	124	6
					SYSTEM RPLS--											
					1560-570-0673,											
					1560-572-8326,&											
					1560-591-0558											
			5310-282-7823	MS24400D4	<96906> .NUT,PLAIN,HEXAGON.....		LL		1	*	*	*		*	124	7
			5330-250-0230	MS29513-22	<96906> .PACKING,PREFORMED.....		EA		1	*	REF	REF		*	124	
			4730-803-5049	MS24396D4	<96906> .ELBOW,TUBE.....		EA		1	*	*	*		*	124	
MF	O			S1650-61840-3	<78286> .TUBE ASSEMBLY.....		EA		1						124	8
					MAKEFR											
					2 EA 4730-287-0289 NUT											
					2 EA 4730-302-8641 SLEEVE											
					AR 4710-278-6398 TUBE											
MF	F			S1650-61840-4	<78286> ..TUBE.....NOTE 2		EA		1						124	11
			5310-282-7823	MS24400D4	<96906> .NUT,PLAIN,HEXAGON.....		LL		1	*	*	*		*	124	12
			5330-250-0230	MS29513-22	<96906> .PACKING,PREFORMED.....		EA		1	*	REF	REF		*	124	
			4730-725-4351	MS24394D4	<96906> .ELBOW,TUBE.....		EA		1	*	*	*		*	124	

(1) SOURCE, MAINT AND REC CODE (a) SOURCE CODE	(b) MAINT LEVEL	(c) REC CODE	(2) FEDERAL STOCK NUMBER	REFERENCE NUMBER	(3) DESCRIPTION	MODELS USABLE ON CH-34C	(4) UNIT OF ISSUE	(5) QTY INC IN UNIT PACK	(6) QTY INC IN UNIT	(7) 30-DAY DS GS MAINT ALW (a) 1-20	(b) 21-50	(c) 51-100	(8) 1-YR ALW PER 100 EQUIP CNTGCY	(9) DEPOT MAINT ALW PER 100 EQUIP	(10) ILLUSTRATION (a) FIG NO	(b) ITEM NO
P	F		2915-203-5494	AV181474B	<73760> .VALVE ASSEMBLY,FUEL,.....		EA		1	*	*	2		*	124	13
					SOLENOID											
					ATTACHING PARTS											
			5305-144-3828	AN520-10R26	<88044> .SCREW,MACHINE.....		HD		2	*	*	*		*	124	14
			5310-183-4406	AN960PD10	<88044> .WASHER,FLAT.....		HD		4	*	*	*		*	124	
			5310-877-5797	MS21044N3	<96906> .NUT,SELF-LOCKING,HEXAGON....		EA		2	*	*	*		*	124	
					---*---											
			5340-716-8061	NAS43HT3-128	<80205> .SPACER,SLEEVE.....		EA		2	*	*	*		*	124	16
			4730-834-9560	MS24392D4	<96906> .NIPPLE,TUBE.....		EA		1	REF	REF	REF	REF	*	124	17
MF	O			S1650-61840-5	<78286> .TUBE ASSEMBLY.....		EA		1						124	18
					NOTE 1											
			4730-287-0289	AN818-4D	<88044> ..NUT,TUBE COUPLING.....		EA		2	*	*	*		*	124	19
			4730-302-8641	MS20819-4D	<96906> ..SLEEVE,FLARED TUBE FITTING.		EA		2	*	*	*		*	124	20
				S1650-61840-6	<78286> ..TUBE.....NOTE 2		EA		1						124	21
			4730-834-9560	MS24392D4	<96906> .NIPPLE,TUBE.....		EA		1	REF	REF	REF	REF	*	124	22
MF	F			S1650-61840-27	<78286> .TUBE ASSEMBLY.....NOTE 3		EA		1						124	23
MF	F			S1650-61840-28	<78286> ..TUBE.....NOTE 2		EA		1						124	26
MF	F			S1650-61840-29	<78286> .TUBE ASSEMBLY.....NOTE 1		EA		1						124	27
MF	F			S1650-61840-30	<78286> ..TUBE.....NOTE 2		EA		1						124	30
MF	O			S1650-61840-9	<78286> .TUBE ASSEMBLY.....		EA		1						124	31
					MAKEFR											
					AR 4710-278-6378 TUBE											
					2 EA 4730-287-0289 NUT											
					2 EA 4730-302-8641 SLEEVE											
MF	F			S1650-61840-10	<78286> ..TUBE.....NOTE 2		EA		1						124	34
MF	F			S1650-61840-15	<78286> .TUBE ASSEMBLY.....NOTE 1		EA		1						124	35
MF	F			S1650-61840-16	<78286> ..TUBE.....NOTE 2		EA		1						124	38
			5310-282-7823	MS24400D4	<96906> .NUT,PLAIN,HEXAGON.....		LL		1	*	*	*		*	124	39
			5330-263-8028	MS29512-04	<96906> .PACKING,PREFORMED.....		EA		1	32	80	160		*	124	40
P	O		4730-725-4351	MS24394D4	<96906> .ELBOW,FUEL SYSTEM.....		EA		1	*	*	*		*	124	41
			5310-282-7823	MS24400D4	<96906> .NUT,PLAIN,HEXAGON.....		LL		1	*	*	*		*	124	42
			4730-720-4984	MS24390D4	<96906> .TEE,TUBE.....		EA		1	*	*	*		*	124	43
			5330-250-0230	MS29513-22	<96906> .PACKING,PREFORMED.....		EA		1	*	REF	REF		*	124	44
MF	O			S1650-61840-11	<78286> .TUBE ASSEMBLY.....		EA		1						124	45
					NOTE 1											
				S1650-61840-12	<78286> ..TUBE.....NOTE 3		EA		1						124	48
			4730-834-9560	MS24392D4	<96906> .NIPPLE,TUBE.....		EA		1	REF	REF	REF	REF	*	124	49
			5330-250-0230	MS29513-22	<96906> .PACKING,PREFORMED.....		EA		1	*	REF	REF		*	124	
			5310-282-7823	MS24400D4	<96906> .NUT,PLAIN,HEXAGON.....		LL		1	*	*	*		*	124	50
			5330-250-0230	MS29513-22	<96906> .PACKING,PREFORMED.....		EA		1	*	REF	REF		*	124	
			4730-725-4351	MS24394D4	<96906> .ELBOW,TUBE.....		EA		1	*	*	*		*	124	
MF	O			S1650-61840-13	<78286> .TUBE ASSEMBLY.....		EA		1						124	51
					NOTE 1											
MF	F			S1650-61840-14	<78286> ..TUBE.....NOTE 2		EA		1						124	54
			4730-834-9560	MS24392D4	<96906> .NIPPLE,TUBE.....		EA		1	REF	REF	REF	REF	*	124	55
			5330-250-0230	MS29513-22	<96906> .PACKING,PREFORMED.....		EA		1	*	REF	REF		*	124	56
			5310-282-7823	MS24400D4	<96906> .NUT,PLAIN,HEXAGON.....		LL		1	*	*	*		*	124	57
			5330-250-0230	MS29513-22	<96906> .PACKING,PREFORMED.....		EA		1	*	REF	REF		*	124	
			4730-725-4351	MS24394D4	<96906> .ELBOW,TUBE.....		EA		1	*	*	*		*	124	
			5310-282-7823	MS24400D4	<96906> .NUT,PLAIN,HEXAGON.....		LL		1	*	*	*		*	124	58
			4730-715-0018	AN832-4D	<88044> .NIPPLE,TUBE.....		EA		1	*	*	*		*	124	
			5330-250-0230	MS29513-22	<96906> .PACKING,PREFORMED.....		EA		1	*	REF	REF		*	124	

(1) SOURCE, MAINT AND REC CODE (a) SOURCE CODE	(b) MAINT LEVEL	(c) REC CODE	(2) FEDERAL STOCK NUMBER	REFERENCE NUMBER	(3) DESCRIPTION	MODELS USABLE ON CH-34C	(4) UNIT OF ISSUE	(5) QTY INC IN UNIT PACK	(6) QTY INC IN UNIT	(7) 30-DAY DS-GS MAINT ALW (a) 1-20	(b) 21-50	(c) 51-100	(8) 1-YR ALW PER 100 EQUIP CNTGCY	(9) DEPOT MAINT ALW PER 100 EQUIP	(10) ILLUSTRATION (a) FIG NO	(b) ITEM NO
P	F		1660-509-4435	20C30 <58588>	.VALVE,SAFETY RELEASE.....		EA		1	*	*	*		*	124	59
P	F		1660-509-4435	P309 <64560>	.VALVE,PRESSURE RELIEF.....		EA		1	*	*	*		*	124	
MF	O			S1650-61840-19 <78286>	.TUBE ASSEMBLY..... NOTE 3		EA		1						124	60
MF	F			S1650-61840-20 <78286>	..TUBE.....NOTE 2		EA		1						124	63
			4730-240-5905	AN816-4D <88044>	.ADAPTER,STRAIGHT PIPE TO.... TUBE		EA		1	*	*	*		*	124	64
MF	O			S1650-61840-17 <78286>	.TUBE ASSEMBLY..... NOTE 3		EA		1						124	65
MF	F			S1650-61840-18 <78286>	..TUBE.....NOTE 2		EA		1						124	68
			5310-282-7823	MS24400D4 <96906>	.NUT,PLAIN,HEXAGON.....		LL		1	*	*	*		*	124	69
			5330-250-0230	MS29513-22 <96906>	.PACKING,PREFORMED.....		EA		1	*	REF	REF		*	124	
			4730-725-4351	MS24394D4 <96906>	.ELBOW,TUBE.....		EA		1	*	*	*		*	124	
			4730-722-7212	MS24401D4 <96906>	.ELBOW,TUBE.....		EA		1	*	*	*		*	124	70
MF	O			4720EG004-4C0170 <81996>	.HOSE ASSEMBLY..... TETRAFLUOROETHYLENE MAKEFR		EA		1						124	71
					AR 4720-857-1732 HOSE											
					2 EA 4730-952-5532 ADAPTER											
					2 EA 4730-967-9513 SOCKET											
					2 EA 4730-967-9521 SLEEVE											
					2 EA 4730-969-6668 ELBOW											
					1 EA 5340-834-8330 DUST PLUG											
X2	O			S1650-61840-21 <78286>	.TUBE ASSEMBLY.....		EA		1						124	72
			4730-287-0289	AN818-4D <88044>	..NUT,TUBE COUPLING.....		EA		2	*	*	*		*	124	73
			4730-302-8641	MS20819-4D <96906>	..SLEEVE,FLARED TUBE FITTING.		EA		2	*	*	*		*	124	74
X1				S1650-61840-22 <78286>	..TUBE.....		EA		1						124	75
P	F		2915-203-5494	AV1814748 <73760>	.VALVE ASSEMBLY..... ATTACHING PARTS		EA		1	*	*	*		*	124	76
			5305-995-3440	MS35207-270 <96906>	.SCREW,MACHINE.....		HD		2	*	*	*		*	124	77
			5310-183-4406	AN960PD10 <88044>	.WASHER,FLAT.....		HD		4	*	*	*		*	124	
			5310-877-5797	MS21044N3 <96906>	.NUT,SELF-LOCKING,HEXAGON....		EA		2	*	*	*		*	124	
					---*---											
			5340-723-2843	NAS43-3-22 <80205>	.SPACER,SLEEVE.....		EA		4	*	*	*		*	124	78
X1				20C29 <58588>	.PUMP,ROTARY POWER DRIVEN....		EA								124	
P	O		1660-529-5487	3008A <64560>	.PUMP,ROTARY,POWER DRIVEN.... ATTACHING PARTS		EA		1	*	*	*		*	124	79
			5305-543-2665	MS35265-77 <96906>	.SCREW,MACHINE.....		EA		4	*	*	*		*	124	80
			5310-187-2354	AN960PD416 <88044>	.WASHER,FLAT.....		HD		4	*	*	*		*	124	
					---*---											
X2	H		1650-326-0607	100094B <64560>	.COVER ASSEMBLY,DEICER.....		EA		1	*	*	*		*	124	
X1				20-7608 <75511>	..BEARING,BALL,ANNULAR.....		EA		1						124	
X1				10-7877 <75511>	..STUD.....		EA		1						124	
X1				0-2252 <75511>	..WASHER,FLAT.....		EA		1						124	
P	H		1650-397-5903	100550 <64560>	..BLADE.....		EA		2	*	*	*		*	124	
P	D		1660-167-1421	100650A <64560>	..CAGE,SEAL.....		EA		1					*	124	
P	H		5305-207-6524	100710A <64560>	..SCREW,MACHINE.....		EA		1	*	*	*		*	124	
P	O		2915-202-5931	51A93 <58588>	.FILTER,FLUID PRESSURE..... ATTACHING PARTS		EA		1	*	*	*		*	124	81
			5305-989-7434	MS35207-263 <96906>	.SCREW,MACHINE.....				2	*	*	*		*	124	82
			5310-183-4406	AN960PD10 <88044>	.WASHER,FLAT.....		HD		4	*	*	*		*	124	
			5310-877-5797	MS21044N3 <96906>	.NUT,SELF-LOCKING,HEXAGON....		EA		2	*	*	*		*	124	

(1) SOURCE, MAINT AND REC CODE (a) SOURCE CODE	(b) MAINT LEVEL	(c) REC CODE	(2) FEDERAL STOCK NUMBER	REFERENCE NUMBER	(3) DESCRIPTION	MODELS USABLE ON CH-34C	(4) UNIT OF ISSUE	(5) QTY INC IN UNIT PACK	(6) QTY INC IN UNIT	(7) 30-DAY DS GS MAINT ALW (a) 1-20	(b) 21-50	(c) 51-100	(8) 1-YR ALW PER 100 EQUIP CNTGCY	(9) DEPOT MAINT ALW PER 100 EQUIP	(10) ILLUSTRATION (a) FIG NO	(b) ITEM NO
					CONTINUED										124	
					---*---											
			5330-265-1089	MS29513-125 <96906>	..PACKING,PREFORMED.....		EA		1	*	*	*		*	124	83
P	O		2910-203-3322	A26422 <06840>	..FILTER ELEMENT.....		EA		1	*	*	*		*	124	84
					NOTE 1											
					MAKEFR											
					AR 4710-278-6398 TUBE											
					2 EA 4730-287-0289 NUT											
					2 EA 4730-302-8641 SLEEVE											
					NOTE 2											
					MAKEFR											
					AR 4710-279-0958 TUBE											
					NOTE 3											
					MAKEFR											
					AR 4710-279-0958 TUBE											
					2 EA 4730-287-0289 NUT											
					2 EA 4730-302-8641 SLEEVE											
				S1650-61700-5 <78286>	RESCUE HOIST INSTALLATION....										125	
					SEE FIG.115 FOR NHA											
		T	1680-560-6399	BL1315-1 <08484>	.WINCH,AIRCRAFT MOUNTED.....										125	
					RPL-BY 1680-673-2961											
P	F	T	1680-673-2961	BL1315-11 <08484>	.WINCH,AIRCRAFT MOUNTED.....		EA		1	*	*	2		*	125	1
					RPLS-- 1680-560-6399 SEE											
					FIG.125A FOR BREAKDOWN											
					ATTACHING PARTS											
			5306-180-2749	AN5H10 <88044>	.BOLT,MACHINE.....		HD		4	*	*	*		*	125	2
			5310-184-8980	AN960PD516L <88044>	.WASHER,FLAT.....		HD		12	*	*	*		*	125	
					---*---											
				S1650-61701 <78286>	.SUPPORT AND FITTING.....				1						125	
					INSTALLATION											
P	F		1560-340-1172	S1650-61702 <78286>	..SUPPORT ASSEMBLY.....		EA		1	*	*	2		*	125	3
P	O		1560-572-6869	S1650-61721 <78286>	...ROD ASSEMBLY.....		EA		1	*	*	2		*	125	
X1				S1650-61721-1 <78286>	....ROD END.....		EA		1						125	4
P	O		1560-340-1888	S1650-61717-2 <78286>	..FITTING ASSEMBLY.....		EA		1	*	*	*		*	125	5
					ATTACHING PARTS											
			5306-151-2325	AN176H17 <88044>	..BOLT,MACHINE.....		EA		1	*	*	*		*	125	6
			5310-187-2395	AN960PD616L <88044>	..WASHER,FLAT.....		HD		2	*	*	*		*	125	
			5310-275-2016	MS20364-624A <96906>	..NUT,SELF-LOCKING,HEXAGON...		HD		1	*	*	*		*	125	
			5306-180-2751	AN5H12 <88044>	..BOLT,MACHINE.....		HD		3	*	*	*		*	125	7
			5310-184-8980	AN960PD516L <88044>	..WASHER,FLAT.....		HD		6	*	*	*		*	125	
			5310-088-0553	MS21044N5 <96906>	..NUT,SELF-LOCKING,HEXAGON...		HD		3	*	*	*		*	125	
					---*---											
P	O		1560-693-8818	S1650-61716 <78286>	..FITTING.....		EA		1	*	*	*		*	125	8
					ATTACHING PARTS											
			5306-141-4776	NAS464-4A11 <80205>	..BOLT,MACHINE.....		EA		1	*	*	*		*	125	9
			5310-184-9001	AN960PD416L <88044>	..WASHER,FLAT.....		HD		2	*	*	*		*	125	

(1) SOURCE, MAINT AND REC CODE (a) SOURCE CODE	(b) MAINT LEVEL	(c) REC CODE	(2) FEDERAL STOCK NUMBER	(3) DESCRIPTION REFERENCE NUMBER			MODELS USABLE ON CH-34C	(4) UNIT OF ISSUE	(5) QTY INC IN UNIT PACK	(6) QTY INC IN UNIT	(7) 30-DAY DS GS MAINT ALW (a) 1-20	(b) 21-50	(c) 51-100	(8) 1-YR ALW PER 100 EQUIP CNTGCY	(9) DEPOT MAINT ALW PER 100 EQUIP	(10) ILLUSTRATION (a) FIG NO	(b) ITEM NO
			5310-543-4443	MS20364-428A	<96906>	..NUT,SELF-LOCKING,HEXAGON...		HD		1	*	*	*		*	125	
			5306-182-2060	AN3H7A	<88044>	..BOLT,MACHINE.....		HD		2	*	*	*		*	125	10
			5310-167-0753	AN960PD10L	<88044>	..WASHER,FLAT.....		HD		4	*	*	*		*	125	
			5310-877-5797	MS21044N3	<96906>	..NUT,SELF-LOCKING,HEXAGON...		EA		2	*	*	*		*	125	
			5306-182-1958	AN4H10A	<88044>	..BOLT,MACHINE.....		HD		2	*	*	*		*	125	11
			5310-184-9001	AN960PD416L	<88044>	..WASHER,FLAT.....		HD		2	*	*	*		*	125	
			5310-184-9001	AN960PD416L	<88044>	..WASHER,FLAT.....		HD		4	*	*	*		*	125	
			5310-877-5796	MS21044N4	<96906>	..NUT,SELF-LOCKING,HEXAGON...		EA		2	*	*	*		*	125	
						---*---											
P	O		1560-340-1994	S1650-61718-2	<78286>	..FITTING,HOIST.....		EA		1	*	*	*		*	125	12
						ATTACHING PARTS											
			5306-151-2324	AN176H20	<88044>	..BOLT,MACHINE.....		EA		1	*	*	*		*	125	13
			5310-187-2395	AN960PD616L	<88044>	..WASHER,FLAT.....		HD		2	*	*	*		*	125	
			5310-275-2016	MS20364-624A	<96906>	..NUT,SELF-LOCKING,HEXAGON...		HD		1	*	*	*		*	125	
			5306-182-2060	AN3H7A	<88044>	..BOLT,MACHINE.....		HD		2	*	*	*		*	125	14
			5310-167-0753	AN960PD10L	<88044>	..WASHER,FLAT.....		HD		4	*	*	*		*	125	
			5310-877-5797	MS21044N3	<96906>	..NUT,SELF-LOCKING,HEXAGON...		EA		2	*	*	*		*	125	
			5306-182-2061	AN3H10A	<88044>	..BOLT,MACHINE.....		HD		2	*	*	*		*	125	15
			5310-167-0753	AN960PD10L	<88044>	..WASHER,FLAT.....		HD		4	*	*	*		*	125	
			5310-877-5797	MS21044N3	<96906>	..NUT,SELF-LOCKING,HEXAGON...		EA		2	*	*	*		*	125	
						---*---											
P	F		1560-340-1175	S1650-61715	<78286>	..BRACE ASSEMBLY,RESCUE HOIST		EA		1	*	*	2		*	125	16
						ATTACHING PARTS											
			5306-156-2700	AN24-16	<88044>	..BOLT,CLEVIS.....		HD		2	*	*	*		*	125	
			5310-543-4443	MS20364-428A	<96906>	..NUT,SELF-LOCKING,HEXAGON...		HD		2	*	*	*		*	125	
			5310-184-9001	AN960PD416L	<88044>	..WASHER,FLAT.....		HD		2	*	*	*		*	125	
						---*---											
P	H		1680-701-9219	BL1170	<08484>	.HOOK ASSEMBLY,RESCUE HOIST..		EA		1	*	*	2		*	125	17
P	F		1680-564-1537	BL1359	<08484>	.HANDLE AND HOOK ASSEMBLY....		EA		1	*	*	*		*	125	
P	F		1680-560-6445	BL1572	<08484>	.CABLE ASSEMBLY,HOIST.....		EA		1	*	*	2		*	125	18
P	O		4240-673-5679	ZN2268	<96537>	.RESCUE SEAT,HELICOPTER.....		EA		1	*	*	*		*	125	
			4720-868-8462	EAB440-4-0340	<81996>	.HOSE ASSEMBLY.....		EA		1	*	*	2		*	125	19
P	F		4720-618-8791	S1665-20058-23	<78286>	.HOSE ASSEMBLY.....		EA		1	*	2	2		*	125	20
P	F		4720-684-0563	S1665-20058-25	<78286>	.HOSE ASSEMBLY.....		EA		1	*	*	*		*	125	21
			5935-539-2651	MS3106A10SL4S	<96906>	.CONNECTOR,PLUG,ELECTRICAL...		EA		1	*	*	*		*	125	23
P	F	T	1680-673-2961	BL1315-11	<08484>	WINCH,AIRCRAFT MOUNTED.....		EA			*	*	REF			125A	
						RPLS-- 1680-560-6399 SEE											
						FIG.125 FOR NHA											
P	H	R	1650-540-0170	MF9-713-30B2	<62983>	.MOTOR,HYDRAULIC SEE FIG....		EA		1	*	*	*		*	125A	1
						125B FOR BREAKDOWN											
						ATTACHING PARTS											
				Y1112-416-20FH	<08484>	.SCREW,CAP.....NOTE 1		EA		4						125A	2
			5310-167-0835	AN960-416L	<88044>	.WASHER,FLAT.....		HD		4	*	*	*		*	125A	3
						---*---											
				1820-27	<81168>	.SEAL,O RING.....NOTE 1		EA		1						125A	4
			4730-289-3019	MS9015-04	<96906>	.PLUG,MACHINE THREAD.....		EA		1	REF	REF	REF	REF	*	125A	5

(1) SOURCE, MAINT AND REC CODE (a) SOURCE CODE	(b) MAINT LEVEL	(c) REC LEVEL	(2) FEDERAL STOCK NUMBER	REFERENCE NUMBER		(3) DESCRIPTION	MODELS USABLE ON CH-34C	(4) UNIT OF ISSUE	(5) QTY INC IN UNIT PACK	(6) QTY INC IN UNIT	(7) 30-DAY DS GS MAINT ALW (a) 1-20	(b) 21-50	(c) 51-100	(8) 1-YR ALW PER 100 EQUIP CNTGCY	(9) DEPOT MAINT ALW PER 100 EQUIP	(10) ILLUSTRATION (a) FIG NO	(b) ITEM NO
			5330-291-3281	AN123861	<88044>	.PACKING,PREFORMED.....		EA		1	*	*	*		*	125A	6
P	F		1680-560-6434	BL1555	<08484>	.COVER,GEAR BOX.....		EA		1	*	*	*		*	125A	7
						ATTACHING PARTS											
			5305-954-3487	MS35190-271	<96906>	.SCREW,MACHINE.....		EA		8	*	*	*		*	125A	8
						---*---											
				BL1578	<08484>	.LABEL,WIRING DIAGRAM..NOTE 1		EA		2						125A	9
P	F		1680-716-1805	BL1556	<08484>	.GASKET-GEAR BOX.....NOTE 1		EA		1	*	*	*		*	125A	10
P	H		5306-531-0863	BL1575	<08484>	.BOLT,MACHINE.....		EA		1	*	*	*		*	125A	11
P	H		1680-560-6403	BL1488	<08484>	.GEAR ASSEMBLY-IDLER.....		EA		1	*	*	*		*	125A	12
X1				4BIC12WPPOL	<70413>	..BEARING,BALL,ANNULAR.NOTE 1		EA		1						125A	
X1				BL1487	<08484>	..GEAR,IDLER.....		EA		1						125A	
			5310-558-4191	AL1256-17	<08484>	.WASHER.....NOTE 1		EA		1						125A	13
P	H		1680-560-0681	BL806	<08484>	.WORM.....		EA		1	*	*	*		*	125A	14
						ATTACHING PARTS											
			5315-234-1856	MS24665-155	<96906>	.PIN,COTTER.....NOTE 1		HD		1	*	*	*		*	125A	15
						---*---											
P	F		1680-710-8539	BL1516	<08484>	.PLATE,ROLLER COVER.....		EA		1	*	*	*		*	125A	16
						ATTACHING PARTS											
				Y1112-6-12F	<08484>	.SCREW,CAP.....NOTE 1		EA		2						125A	17
						---*---											
P	F		1680-560-6445	BL1572	<08484>	.CABLE ASSEMBLY-HOIST.....		EA		1	*	*	REF		REF	125A	18
						ATTACHING PARTS											
				AN565B1024H6	<88044>	.SETSCREW.....NOTE 1		EA		2						125A	19
						---*---											
P	H		1680-560-6446	BL1576	<08484>	.BUMPER ASSEMBLY.....		EA		1	*	*	*		REF	125A	20
X1				BL758	<08484>	..RETAINER-BUMPER,LOWER.....		EA		1						125A	21
X1				BL804	<08484>	..SHIELD-RUBBER.....		EA		1						125A	22
X1				BL756	<08484>	..BUMPER-RUBBER.....		EA		1						125A	23
X1				BL1521	<08484>	..RETAINER-BUMPER,UPPER.....		EA		1						125A	24
				BL761	<08484>	.COVER-WIND SHAFT.....NOTE 1		EA		1						125A	25
						ATTACHING PARTS											
				Y1112-10-16FJ	<08484>	.SCREW,CAP.....NOTE 1		EA		3						125A	26
						---*---											
				BL747	<08484>	.SPACER-WIND SHAFT COVER..... NOTE 1		EA		1						125A	27
AF	F	R		BL2845	<08484>	.GUILLOTINE AND BALL SCREW... ASSEMBLY		EA		1						125A	28
						ATTACHING PARTS											
			5315-234-1856	MS24665-155	<96906>	.PIN,COTTER.....NOTE 1		HD		1	*	*	*		*	125A	29
P	F		5310-531-0603	BL797	<08484>	.NUT,SLOTTED,HEXAGON.....		EA		1	*	*	*		*	125A	30
						---*---											
AH	H	R		1041-1	<98708>	..CABLE CUTTER ASSEMBLY.....		EA		1						125A	
P	H		5340-754-1591	1013-38	<98708>	...CAP,PROTECTIVE,DUST AND... MOISTURE		EA		1	*	*	*		REF	125A	31
P	H		5340-714-6304	BL2831	<08484>	...BUMPER,PLASTIC.....NOTE 1		EA		1	*	*	*		*	125A	32
P	H		1680-787-3985	1041-28	<98708>	...ELBOW ASSEMBLY.....		EA		1	*	*	*		*	125A	33
P	H		5315-687-9702	1013-39	<98708>	...PIN,STRAIGHT,HEADLESS.....		EA		1	*	*	*		*	125A	34
P	H		1680-717-1213	1041-27	<98708>	...PISTON,CUTTER.....		EA		1	*	*	*		*	125A	35
			5330-350-9013	AN6227B10	<88044>	...PACKING,PREFORMED...NOTE 2		EA		1	*	*	*		*	125A	36
P	H		1377-630-9597	1013-40	<98708>	...CARTRIDGE,ACTUATING.....		EA		1	*	*	*		REF	125A	37
			5330-833-7491	MS28778-5	<96906>	...PACKING,PREFORMED..... ACTUATED NOTE 2		EA		1	*	REF	REF		*	125A	38

(1) SOURCE, MAINT AND REC CODE (a) SOURCE	(b) MAINT	(c) REC	(2) FEDERAL STOCK NUMBER	REFERENCE NUMBER		(3) DESCRIPTION	MODELS USABLE ON CH-34C	(4) UNIT OF ISSUE	(5) QTY INC IN UNIT PACK	(6) QTY INC IN UNIT	(7) 30-DAY DS GS MAINT ALW (a) 1-20	(b) 21-50	(c) 51-100	(8) 1-YR ALW PER 100 EQUIP CNTGCY	(9) DEPOT MAINT ALW PER 100 EQUIP	(10) ILLUSTRATION (a) FIG NO	(b) ITEM NO
P	H		1680-703-3367	BL1843	<08484>	...RETAINER,CABLE GUIDE.....		EA		1	*	*	*		*	125A	39
P	H		1680-703-3361	BL1841	<08484>	...SCREW ASSEMBLY.....		EA		1	*	*	*		*	125A	40
						ATTACHING PARTS											
				Y1113-10-16FH	<08484>	...SCREW.....NOTE 1		EA		2						125A	41
						---*---											
				52-018-078-0625	<72962>	...PIN.....NOTE 1		EA		1						125A	42
P	H		1680-560-6424	BL1522	<08484>	..,GUIDE,CABLE.....		EA		1	*	*	*		*	125A	43
P	H		5330-832-1222	BL1546	<08484>	...RETAINER,PACKING.....		EA		1	*	*	*		*	125A	44
				BL1547	<08484>	...BUMPER,RUBBER.....NOTE 1		EA		1						125A	45
P	H		1680-560-6405	BL1490	<08484>	.GEAR,SPUR.....		EA		1	*	*	*		*	125A	46
				212	<65415>	.KEY-WOODRUFF.....NOTE 1		EA		1						125A	47
				104KSFF	<38443>	.BEARING,BALL.....		EA		2						125A	48
P	H		5340-680-3385	RST50	<80756>	.RING,RETAINING.....NOTE 1		EA		1	*	*	*		*	125A	49
P	H		5310-558-5278	AL1256-34	<08484>	.WASHER,FLAT.....NOTE 1		EA		1	*	*	*		*	125A	50
				BL1569	<08484>	.SPRING-RATCHET.....NOTE 1		EA		1						125A	51
P	H		1680-560-6408	BL1495	<08484>	.RATCHET,ROLLER DRIVE.....		EA		1	*	*	*		*	125A	52
				RST78	<80756>	.RING-RETAINING.....NOTE 1		EA		1						125A	53
				RR145	<80756>	.RING-RETAINING.....NOTE 1		EA		1						125A	54
P	H		3110-277-0256	4508-61	<08484>	.BEARING,BALL,ANNULAR..NOTE 1		EA		1	*	*	*		*	125A	55
P	H		1680-560-6406	BL1491	<08484>	.GEAR,SPUR.....		EA		1	*	*	*		*	125A	56
P	H		1680-560-6430	BL1542	<08484>	.SHAFT ASSEMBLY,ROLLER.....		EA		1	*	*	*		*	125A	57
P	H		1680-710-8537	BL1543	<08484>	.CONNECTOR ASSEMBLY,BOX MOUNT		EA		1	*	*	*		*	125A	58
						ATTACHING PARTS											
			5305-174-0702	AN500A4-8	<88044>	.SCREW,MACHINE.....NOTE 1		EA		4	*	*	*		*	125A	59
P	H		5310-558-6886	AL1256-2	<08484>	.WASHER.....		EA		4	*	*	*		*	125A	60
						---*---											
			5940-503-9995	MS25036-1	<96906>	...TERMINAL,LUG.....		HD		4	*	*	*		*	125A	
				AL2274	<08484>	..SLEEVE-LIMIT SWITCH.....		EA		1						125A	
						ACTUATING SCREW NOTE 1											
				BL1844-3	<08484>	.CLAMP,CABLE.....NOTE 1		EA		1						125A	61
						ATTACHING PARTS											
			5305-145-7017	AN503-10-8	<88044>	.SCREW,MACHINE.....		HD		1	*	*	*		*	125A	62
			5310-167-0834	AN960-10L	<88044>	.WASHER,FLAT.....NOTE 1		HD		1	*	*	*		*	125A	63
						---*---											
				BL1527	<08484>	.SPACER.....NOTE 1		EA		1						125A	64
				BL1535	<08484>	.SPRING.....NOTE 1		EA		1						125A	65
P	H		1680-560-6429	BL1534	<08434>	.BUSHING,SPLIT.....		EA		1	*	*	*		*	125A	66
P	H		1680-560-6442	BL1570	<08484>	.ARM ASSEMBLY,LIMIT SWITCH...		EA		1	*	*	*		*	125A	67
			5930-556-2492	BL1531	<08484>	.SWITCH,SENSITIVE RPL-BY....										125A	
						5930-636-4345											
P	F		5930-636-4345	MS25011-1	<96906>	.SWITCH,SENSITIVE RPLS--....		EA		2	*	*	*		*	125A	68
						5930-556-2492											
						ATTACHING PARTS											
				Y1112-6-32FH	<08484>	.SCREW.....NOTE 1		EA		2						125A	69
			5310-081-8087	MS21044N06	<96906>	.NUT,SELF-LOCKING,HEXAGON....		EA		2	*	*	*		*	125A	70
				AL1256-4	<08484>	.WASHER.....NOTE 1		EA		2						125A	71
						---*---											
				BL1511	<08484>	.BRACKET-LIMIT SWITCH..NOTE 1		EA		1						125A	72
						ATTACHING PARTS											
				BL656-6-20FH	<08484>	.SCREW.....NOTE 1		EA		2						125A	73
			5310-081-8087	MS21044N06	<96906>	.NUT,SELF-LOCKING,HEXAGON....		EA		2	*	*	*		*	125A	74
						---*---											

(1) SOURCE, MAINT AND REC CODE (a) SOURCE CODE	(b) MAINT LEVEL	(c) REC CODE	(2) FEDERAL STOCK NUMBER	REFERENCE NUMBER	(3) DESCRIPTION	MODELS USABLE ON CH-34C	(4) UNIT OF ISSUE	(5) QTY INC IN UNIT PACK	(6) QTY INC IN UNIT	(7) 30-DAY DS GS MAINT ALW (a) 1-20	(b) 21-50	(c) 51-100	(8) 1-YR ALW PER 100 EQUIP CNTGCY	(9) DEPOT MAINT ALW PER 100 EQUIP	(10) ILLUSTRATION (a) FIG NO	(b) ITEM NO
			5930-556-2492	BL1531	<08484> .SWITCH,SENSITIVE RPL-BY.... 5930-636-4345										125A	
P	F		5930-636-4345	MS25011-1	<96906> .SWITCH,SENSITIVE RPLS--.... 5930-556-2492		EA		2	*	*	*		RFF	125A	75
					ATTACHING PARTS											
				Y1112-6-32F	<08484> .SCREW.....NOTE 1		EA		2						125A	76
				AL1256-4	<08484> .WASHER.....NOTE 1		EA		2						125A	77
					---*---											
P	F		1680-710-8541	BL1493	<08484> .COVER,PINION GEAR.....		EA		1	*	*	*		*	125A	78
					ATTACHING PARTS											
				Y1112-10-20FJ	<08484> .SCREW.....NOTE 1		EA		3						125A	79
P	F		5310-441-4594	19128	<19315> .WASHER,FLAT.....NOTE 1		EA		3	*	*	*		*	125A	80
					---*---											
			5315-882-1438	MS171435	<96906> .PIN,SPRING.....		EA		1	*	*	*		*	125A	81
				AL2274	<08484> .SLEEVE.....NOTE 1		EA		1						125A	82
P	H		1680-560-6440	BL1566	<08484> .SCREW,LIMIT SWITCH.....		EA		1	*	*	*		*	125A	83
P	H		1680-560-6441	BL1567	<08484> .GEAR,WORM.....		EA		1	*	*	*		*	125A	84
P	H		1680-560-6404	BL1489	<08484> .GEAR,SPUR.....		EA		1	*	*	*		*	125A	85
			5340-687-3811	RST150	<80756> .RING,RETAINING.....NOTE 1		EA		1	*	*	*			125A	86
P	H		5315-691-0032	A10390	<07639> .KEY-FLAT.....NOTE 1		EA		1	*	*	*		*	125A	87
P	D		1680-710-8536	BL1551	<08484> .HOUSING,MAIN-GEAR END.....		EA		1					*	125A	88
					ATTACHING PARTS											
				Y1112-10-20FJ	<08484> .SCREW.....NOTE 1		EA		8						125A	89
P	D		5310-441-4594	19128	<19315> .WASHER,FLAT.....NOTE 1		EA		8					*	125A	90
					---*---											
				BL1558	<08484> .REST-STEADY.....		EA		1						125A	91
				BL1061	<08484> .DAMPENER.....NOTE 1		EA		2						125A	92
P	D		3110-144-8666	108KS	<38443> .BEARING,BALL,ANNULAR.....		EA		1					*	125A	93
P	H		1680-560-6421	BL1519	<08484> .STUD,ROLLER.....		EA		1	*	*	*		*	125A	94
					ATTACHING PARTS											
			5310-807-1467	MS21042-3	<96906> .NUT,SELF-LOCKING,HEXAGON....				1	*	*	*		*	125A	95
					---*---											
P	H		1680-560-6420	BL1518	<08484> .ROLLER,RATCHET PAWL.....		EA		1	*	*	*		*	125A	96
P	H		1680-560-6402	BL1486	<08484> .STUD,BEARING.....		EA		1	*	*	*		*	125A	97
					ATTACHING PARTS											
			5310-543-4443	MS20364-428A	<96906> .NUT,SELF-LOCKING,HEXAGON....		HD		1	*	*	*		*	125A	98
				AL1256-36	<08484> .SPACER.....NOTE 1		EA		1						125A	99
				AL1256-37	<08484> .SPACER.....NOTE 1		EA		1						125A	100
					---*---											
AH	H			BL1580	<08484> .PAWL AND SPRING ASSEMBLY....		EA		1						125A	
				BL1529	<08484> ..SPRING.....NOTE 1		EA		1						125A	101
				VG300	<08484> ..SCREW.....NOTE 1		EA		1						125A	102
P	H		1680-560-6419	BL1515	<08484> ..PAWL,DRUM STOP.....		EA		1	*	*	*		*	125A	103
				Y1112-6-12FJ	<08484> .SCREW.....NOTE 1		EA		2						125A	105
					---*---											
P	H		5340-200-7220	RRT112	<80756> .RING,RETAINING.....				1	*	*	*		*	125A	
P	H		5340-597-4356	MS16631-1112	<96906> .RING,RETAINING.....		EA		1	*	*	*		*	125A	106
P	H		3110-155-8425	S5R	<43991> .BEARING,BALL,ANNULAR.....		EA		2	*	*	*		*	125A	107
				BL1524	<08484> .SPACER.....NOTE 1		EA		1						125A	108
P	H		1680-590-3782	BL1512	<08484> .GEAR,SPUR.....		EA		1	*	*	*		*	125A	109
P	H		1680-560-6409	BL1497	<08484> .GEAR,INTERNAL.....		EA		1	*	*	*		*	125A	110
					ATTACHING PARTS											

(1) SOURCE, MAINT AND REC CODE (a) SOURCE CODE	(b) MAINT LEVEL	(c) REC CODE	(2) FEDERAL STOCK NUMBER	(3) DESCRIPTION REFERENCE NUMBER			MODELS USABLE ON CH-34C	(4) UNIT OF ISSUE	(5) QTY INC IN UNIT PACK	(6) QTY INC IN UNIT	(7) 30-DAY DS GS MAINT ALW (a) 1-20	(b) 21-50	(c) 51-100	(8) 1-YR ALW PER 100 EQUIP CNTGCY	(9) DEPOT MAINT ALW PER 100 EQUIP	(10) ILLUSTRATION (a) FIG NO	(b) ITEM NO
				Y1112-10-16FJ	<08484>	.SCREW.....NOTE 1		EA		8						125A	111
						---*---											
P	D		1560-831-7519	BL1553	<08484>	.HOUSING-END.....		EA		1					*	125A	112
P	H		1680-560-6407	BL1492	<08484>	.GEAR,SPUR.....		EA		1	*	*	*		*	125A	113
						ATTACHING PARTS											
				Y1112-10-20FJ	<08484>	.SCREW.....NOTE 1		EA		6						125A	114
						---*---											
P	D		1680-560-6444	BL1571	<08484>	.SHAFT,LIMIT SWITCH.....		EA		1					*	125A	115
				D2-35932	<38443>	.BEARING,BALL.....NOTE 1		EA		1						125A	117
P	H		1680-560-6447	BL1775	<08484>	.RING,SPACER.....		EA		1	*	*	*		*	125A	118
			1680-560-0664	BL1332	<08484>	.SEAL-OIL.....NOTE 1		EA		1	*	*	*			125A	119
P	H		1680-560-6428	BL1532	<08484>	.HOUSING,CLUTCH.....		EA		1	*	*	*		*	125A	120
						ATTACHING PARTS											
				BL1772	<08484>	.SCREW.....NOTE 1		EA		6						125A	121
						---*---											
				BL1773	<08484>	.STRAP-LOCKING.....NOTE 1		EA		3						125A	122
			5330-579-7544	MS28775-243	<96906>	.PACKING,PREFORMED.....NOTE 1		EA		1	*	*	*		*	125A	123
P	H		3110-516-5413	MS115-00609-0100	<96906>	.BEARING,BALL,ANNULAR.....		EA		1	*	*	*		*	125A	124
P	H		1680-560-6439	BL1559	<08484>	.PLATE,BRAKE BACKING.....		EA		1	*	*	*		*	125A	125
						ATTACHING PARTS											
			5315-234-1864	MS24665-302	<96906>	.PIN,COTTER.....		HD		1	*	*	*		*	125A	126
P	H		5310-550-1920	BL1530	<08484>	.NUT.....		EA		1	*	*	*		*	125A	127
						---*---											
				BL1310	<08484>	.KEY-FLAT.....NOTE 1		EA		1						125A	128
P	D		1680-560-6449	BL1821	<08484>	.DISK ASSEMBLY,OUTER BRAKE...		EA		1					*	125A	129
P	H		1680-560-6426	BL1528	<08484>	.DISK,OUTER BRAKE.....		EA		1	*	*	*		*	125A	130
				BL1557	<08484>	.LINING-CLUTCH PLATE...NOTE 1		EA		1						125A	131
P	H		1680-560-6416	BL1509	<08484>	.RETAINER,BRAKE PLATE.....		EA		1	*	*	*		*	125A	132
P	D		1680-560-6411	BL1500	<08484>	.GEAR,SPUR.....		EA		1					*	125A	133
				AL2593-6	<08484>	.SPACER.....NOTE 1		EA		1						125A	134
AD	D			BL1579	<08484>	.SHAFT ASSEMBLY-FIRST STAGE..		EA		1						125A	135
				BL1523	<08484>	..PIN-PLANET STUD.....NOTE 1		EA		2						125A	136
P	H		1680-560-6422	BL1520	<08484>	..STUD,FIRST STAGE.....		EA		2	*	*	*		*	125A	137
				AL1256-40	<08484>	..WASHER.....NOTE 1		EA		4						125A	138
P	D		1680-560-6410	BL1498	<08484>	..GEAR ASSEMBLY,PLANETARY....		EA		2					*	125A	
X1	D			BL1496	<08484>	..GEAR,PLANETARY WHEN.....		EA		1						125A	139
						EXHTD RQTN NHA											
						1680-560-6410											
				4508-18	<08484>	...BEARING.....NOTE 1		EA		1						125A	
				4BIC00X08	<08484>	..BEARING,BALL.....NOTE 1		EA		1						125A	140
P	D		1680-560-6415	BL1508	<08484>	..SHAFT,MAIN.....		EA		1					*	125A	141
P	D		5310-560-6414	BL1502	<08484>	.WASHER,RECESSED.....		EA		3					*	125A	142
						ATTACHING PARTS											
				BL655-10-56F	<08484>	.SCREW.....NOTE 1		EA		3						125A	143
			5310-877-5797	MS21044N3	<96906>	.NUT,SELF-LOCKING,HEXAGON....		EA		3					*	125A	144
						---*---											
P	D		5340-796-6165	BL1560	<08484>	.RETAINER,NUT.....		EA		3					*	125A	145
AD	D			BL8	<08484>	.GEAR ASSEMBLY.....		EA		3						125A	146
P	D		1680-714-2019	BL5	<08484>	..GEAR,PLANETARY.....		EA		1					*	125A	
P	H		5310-033-5280	VJ71	<08484>	.WASHER,FLAT.....NOTE 1		EA		3	*	*	*		*	125A	147
P	D		1680-560-6413	BL1501	<08484>	.STUD,BEARING.....		EA		3					*	125A	148
P	H	R	1680-560-6418	BL1513	<08484>	.CLUTCH ASSEMBLY.....		EA		1	*	*	*		*	125A	149

(1) SOURCE, MAINT AND REC CODE (a) SOURCE CODE	(b) MAINT LEVEL	(c) REC LEVEL CODE	(2) FEDERAL STOCK NUMBER	REFERENCE NUMBER	(3) DESCRIPTION	MODELS USABLE ON CH-34C	(4) UNIT OF ISSUE	(5) QTY INC IN UNIT PACK	(6) QTY INC IN UNIT	(7) 30-DAY DS GS MAINT ALW (a) 1-20	(b) 21-50	(c) 51-100	(8) 1-YR ALW PER 100 EQUIP CNTGCY	(9) DEPOT MAINT ALW PER 100 EQUIP	(10) ILLUSTRATION (a) FIG NO	(b) ITEM NO
P	D		1680-560-6425	BL1525 <08484>	.DRUM.....		EA		1					*	125A	150
				BL1822 <08484>	.NAMEPLATE.....NOTE 1		EA		1						125A	151
			1680-670-2260	BL1919 <08484>	.VALVE ASSEMBLY,RELIEF.NOTE 1		EA		1	*	*	*			125A	152
				E1129-85-9 <08484>	.CAP-PROTECTOR.....NOTE 1		EA		1						125A	153
				BL2294 <08484>	.LABEL-RUBBER CONTAMINATION.. NOTE 1		EA		1						125A	154
				BL1297 <08484>	.LABEL-OIL FILLER.....NOTE 1		EA		1						125A	155
P	H		1680-416-2499	BL2984 <08484>	PARTS KIT,WINCH RESCUE..... HOIST U/O 1680-673-2961 SEE FUNCTIONAL GROUP 50 FOR COMPONENTS		EA		1	*	*	*		*	125A	
P	F		1680-416-2500	BL2985 <08484>	PARTS KIT,WINCH,RESCUE..... HOIST <CURE DATE> U/O 1680-673-2961 SEE FUNCTIONAL GROUP 50 FOR COMPONENTS NOTE 1 COMPONENT OF KIT 1680-416-2499 NOTE 2 COMPONENT OF KIT 1680-416-2500		EA		1	*	*	*	2	*	125A	
P	H	R	1650-540-0170	MF9-713-3082 <62983>	MOTOR,HYDRAULIC SEE..... FIG.125A FOR NHA		EA			*	*	*			125B	
				90446 <62983>	.SCREW-CYLINDER BEARING PIN.. LOCKING		EA		1						125B	1
			5330-584-0266	MS28775-010 <96906>	.PACKING,PREFORMED.....		EA		1	*	*	*		*	125B	2
				90438 <62983>	.PLATE-VALVE..... ATTACHING PARTS		EA		1						125B	
			5310-167-1285	AN310-4 <88044>	.NUT,CASTELLATED,HEXAGON..... ---*---		HD		4	*	*	*		*	125B	4
P	F		6930-766-5197	46701 <62983>	.GASKET-VALVE PLATE.....		EA		1						125B	5
				925101 <62983>	.CYLINDER HOUSING,STUDS,AND.. PLATES SUBASSEMBLY ATTACHING PARTS		EA		1						125B	
			5310-167-1285	AN310-4 <88044>	.NUT,CASTELLATED,HEXAGON..... ---*---		HD		4	*	*	*		*	125B	6
				61691 <62983>	..HOUSING-30 DEG CYLINDER....		EA		1						125B	
				3X46999 <62983>	..STUD-HOUSING.....		EA		4						125B	
P	F		5307-207-8367	3X46998 <62983>	..STUD-VALVE PLATE.....		EA		4						125B	9
P	H		1650-515-9436	83039 <62983>	..PLATE,IDENTIFICATION..... ATTACHING PARTS		EA		1	*	*	*		*	125B	10
				44689 <62983>	..SCREW..... ---*---		EA		2						125B	11
			1650-180-6055	38448 <62983>	..PLATE-ROTATION..... ATTACHING PARTS		EA		1	*	*	*			125B	12

(1) SOURCE MAINT AND REC CODE (a) SOURCE CODE	(b) MAINT CATEGORY	(c) REC CODE	(2) FEDERAL STOCK NUMBER	REFERENCE NUMBER	(3) DESCRIPTION	MODELS USABLE ON CH-34C	(4) UNIT OF ISSUE	(5) QTY INC IN UNIT PACK	(6) QTY INC IN UNIT	(7) 30-DAY DS GS MAINT ALW (a) 1-20	(b) 21-50	(c) 51-100	(8) 1-YR ALW PER 100 EQUIP CNTOCY	(9) DEPOT MAINT ALW PER 100 EQUIP	(10) ILLUSTRATION (a) FIG NO	(b) ITEM NO
				44F2-3 <86009>	..SCREW-TYPE F..... ---*---		EA		2						125B	
				76158 <62983>	..PLATE,IDENTIFICATION..... ATTACHING PARTS		EA		1						125B	14
				44689 <62983>	..SCREW..... ---*---		EA		4						125B	15
P	F		5330-291-4179	46707 <62983>	.GASKET-BEARING HOUSING.....		EA		1	*	*	*		*	125B	16
				76129 <62983>	.ROTATING GROUP SUBASSEMBLY..		EA		1						125B	
			1650-587-2211	189084 <62983>	..CYLINDER BLOCK UNIT		EA		1	*	*	*			125B	17
					...SHAFT AND PISTONS..... SUBASSEMBLY		EA		1						125B	
X1				43586 <62983>	....PISTON,ROD AND BEARING... SUBASSEMBLY		EA		7						125B	
X1				43595 <62983>	.....PISTON.....		EA		7						125B	
X1				43596 <62983>	.....BEARING-PISTON.....		EA		7						125B	
X1				43597 <62983>	.....ROD,PISTON.....		EA		7						125B	
X1				43598 <62983>	....BEARING,PISTON ROD.....		EA		7						125B	
X1				68505 <62983>	....SHAFT,DRIVE.....		EA		1						125B	
			5340-050-1590	41814 <62983>	....PLUG,EXPANSION.....		EA		1	*	*	*			125B	18
X1				183719 <62983>	...BLOCK,CYLINDER.....		EA		1						125B	19
P	H		1650-474-4754	43585 <62983>	..CONNECTING LINK		EA		1	*	*	*		*	125B	20
X1				43593 <62983>	...LINK-UNIVERSAL.....		EA		1						125B	
X1				43594 <62983>	...PIN-UNIVERSAL LINK.....		EA		1						125B	
P	H		1650-486-4279	43599 <62983>	..KNUCKLE,UNIVERSAL LINK.....		EA		4	*	*	*		*	125B	21
				43601 <62983>	..SEAT,BALL SOCKET.....		EA		1						125B	
P	H		1650-651-4638	183762 <83369>	..RETAINER,PUMP SHAFT.....		EA		1	*	*	*		*	125B	23
P	H		5340-263-1143	66634 <62983>	..RING,RETAINING-SNAP.....		EA		1	*	*	*		*	125B	24
P	H		1650-442-6143	67984 <62983>	..CYLINDER BEARING PIN AND... BEARING SUBASSEMBLY		EA		1						125B	25
X1				67983 <62983>	...PIN-CYLINDER BEARING.....		EA		1						125B	
X1				42915 <62983>	...BEARING,CYLINDER.....		EA		1						125B	
P	H		1650-167-4892	46264 <62893>	..RETAINER,HELICAL..... COMPRESSION SPRING		EA		1	*	*	*		*	125B	26
			5340-229-2827	46750 <62983>	..SPRING,HELICAL COMPRESSION.		EA		1	*	*	*		*	125B	27
			1650-474-4755	43600 <62983>	..BEARING.....		EA		1	*	*	*		*	125B	28
P	H		1650-526-9717	49431 <62983>	..SPRING.....		EA		1	*	*	*		*	125B	29
P	H		1650-167-4891	46702 <62983>	..RETAINER,UNIVERSAL LINK....		EA		1	*	*	*		*	125B	30
			1650-474-4752	42864 <62893>	..KEY-UNIVERSAL LINK..... RETAINER		EA		1	*	*	*		*	125B	31
P	H		3110-156-7522	38751 <62983>	..BEARING,BALL,ANNULAR.....		EA		1	*	*	*		*	125B	32
			5340-282-6343	43603 <62983>	..RING,RETAINING.....		EA		1	*	*	*			125B	33
P	F		3110-144-8522	43626 <79500>	..BEARING,BALL,ANNULAR.....		EA		1	*	*	*		*	125B	34
			1650-663-4826	48637 <62983>	.SEAL,PLAIN,ENCASED.....		EA		1	*	*	*		*	125B	35
				48079 <62983>	.HOUSING,BEARING.....		EA		1						125B	

(1) SOURCE, MAINT AND REC CODE (a) SOURCE CODE	(b) MAINT LEVEL	(c) REC CODE	(2) FEDERAL STOCK NUMBER	REFERENCE NUMBER		(3) DESCRIPTION	MODELS USABLE ON CH-34C	(4) UNIT OF ISSUE	(5) QTY INC IN UNIT PACK	(6) QTY INC IN UNIT	(7) 30-DAY DS GS MAINT ALW (a) 1-20	(b) 21-50	(c) 51-100	(8) 1-YR ALW PER 100 EQUIP CNTGCY	(9) DEPOT MAINT ALW PER 100 EQUIP	(10) ILLUSTRATION (a) FIG NO	(b) ITEM NO
				S1650-62010-1	<78286>	SOUND PROOFING INSTALLATION.. SEE FIG.115 FOR NHA										126	
				S1650-62006-11	<78286>	.SOUND PROOFING INSTALLATION. DRIVE SHAFT TUNNEL				1						126	
P	O		1560-328-4856	S1650-62006-12	<78286>	..PANEL ASSEMBLY,DRIVE..... RPLS-- 1560-586-6794		EA		1	*	2	2		*	126	1
P	O		1560-564-5733	S1650-62006-14	<78286>	..PANEL ASSEMBLY,DRIVE..... SHAFT TUNNEL RPLS-- 1560-626-7233		EA		1	*	*	2		*	126	2
				S1650-62001-6	<78286>	.SOUNDPROOFING INSTALLATION..				1						126	
			5325-290-5933	AN227-8B9B	<88044>	..FASTENER,SNAP.....		EA		10	*	*	*		*	126	3
P	F		5325-174-2923	AN227-8	<88044>	..STUD,FASTENER.....		EA		10					REF	126	4
				S1650-63049-1	<78286>	.BLANKET INSTALLATION.....				1						126	5
P	O		1560-589-6082	S1650-62004-14	<78286>	.SOUNDPROOFING,INSTALLATION.. RPLS-- 1560-586-6793 & 1560-587-6294		EA		1	*	2	2		*	126	
			5325-290-5933	AN227-8B9B	<88044>	..FASTENER,SNAP.....		EA		10	*	*	*		*	126	6
P	F		5325-174-2923	AN227-8	<88044>	..STUD,FASTENER.....		EA		10					REF	126	7
P	O		1560-330-0871	S1650-63065-1	<78286>	..BLANKET ASSEMBLY.....		EA		1	*	2	2		*	126	8
X1				S1650-62004-11	<78286>	..BLANKET.....		EA		1						126	
X1				S1650-62004-13	<78286>	..BLANKET ASSEMBLY.....		EA		1						126	
				S1650-62003-19	<78286>	.SOUNDPROOFING INSTALLATION.. COCKPIT				1						126	
P	O		1560-563-9963	S1650-62003-1	<78286>	..PANEL ASSEMBLY,COCKPIT.....		EA		1	*	2	2		*	126	9
X1				S1650-62003-10	<78286>	...PANEL,COCKPIT FURNISHING.. WHEN EXHTD RQTN NHA 1560-563-9963		EA		1						126	
			5325-290-5933	AN227-8B9B	<88044>	...FASTENER,SNAP.....		EA		16	*	*	*		*	126	10
P	F		5325-174-2923	AN227-8	<88044>	...STUD,FASTENER.....		EA		16					REF	126	11
AF	F			S1650-62011-3	<78286>	...POCKET ASSEMBLY.....		EA		1						126	12
				S1650-62012-2	<78286>	.....PLATE-BACKING.....		EA		1						126	
				S1650-62011-2	<78286>	....ENVELOPE.....		EA		1						126	13
				AN229-2AL24I	<88044>	....FASTENER-SLIDE.....		EA		1						126	14
				S1650-62011-4	<78286>	....POCKET.....		EA		1						126	15
P	O		1560-586-6788	S1650-62003-3	<78286>	..PANEL ASSEMBLY,COCKPIT.....		EA		1	*	2	2		*	126	16
P	O		1560-586-6789	S1650-62003-4	<78286>	..PANEL ASSEMBLY,COCKPIT.....		EA		1	*	*	*		*	126	17
P	O		1560-586-6790	S1650-62003-5	<78286>	..PANEL ASSEMBLY,COCKPIT.....		EA		1	*	*	*		*	126	18
P	O		1560-626-8403	S1650-62003-6	<78286>	..PANEL ASSEMBLY,COCKPIT.....		EA		1	*	*	*		*	126	19
P	O		1560-613-9622	S1650-62003-7	<78286>	..PANEL ASSEMBLY,COCKPIT.....		EA		1	*	*	*		*	126	20
P	O		1560-627-2153	S1650-62003-9	<78286>	..PANEL ASSEMBLY,COCKPIT.....		EA		1	*	*	*		*	126	21
P	O		1560-586-6786	S1650-62003-20	<78286>	..PANEL ASSEMBLY,COCKPIT.....		EA		1	*	*	2		*	126	22
			5325-290-5933	AN227-8B9B	<88044>	...FASTENER,SNAP.....		EA		14	*	*	*		*	126	23
P	F		5325-174-2923	AN227-8	<88044>	...STUD,FASTENER.....		EA		14					REF	126	24
AF	F			S1650-62011-3	<78286>	...POCKET ASSEMBLY.....		EA		1						126	25
				S1650-62012-2	<78286>	.....PLATE-BACKING.....		EA		1						126	
				S1650-62011-2	<78286>	....ENVELOPE.....		EA		1						126	26
				AN229-2AL24I	<88044>	....FASTENER-SLIDE.....		EA		1						126	27
				S1650-62011-4	<78286>	....POCKET.....		EA		1						126	28
P	O		1560-586-6787	S1650-62003-21	<78286>	..PANEL ASSEMBLY,COCKPIT.....		EA		1	*	*	*		*	126	29
				S1650-62002-45	<78286>	.SOUNDPROOFING INSTALLATION.. CEILING				1						126	
P	O		1560-633-6131	S1650-62002-46	<78286>	..PANEL ASSEMBLY.....		EA		1	*	2	2		*	126	30

(1) SOURCE, MAINT AND REC CODE (a) SOURCE CODE	(b) MAINT LEVEL	(c) REC CODE	(2) FEDERAL STOCK NUMBER	REFERENCE NUMBER	(3) DESCRIPTION	MODELS USABLE ON CH-34C	(4) UNIT OF ISSUE	(5) QTY INC IN UNIT PACK	(6) QTY INC IN UNIT	(7) 30-DAY DS/GS MAINT ALW (a) 1-20	(b) 21-50	(c) 51-100	(8) 1-YR ALW PER 100 EQUIP CNTGCY	(9) DEPOT MAINT ALW PER 100 EQUIP	(10) ILLUSTRATION (a) FIG NO	(b) ITEM NO
					CONTINUED										126	30
					ATTACHING PARTS											
			5305-576-1499	AN525-832R16 <88044>	..SCREW,MACHINE.....		EA		6	*	*	*		*	126	31
			5310-184-8966	AN960PD8 <88044>	..WASHER,FLAT.....		HD		6	*	*	*		*	126	
			5305-281-8874	AN525-832R18 <88044>	..SCREW,MACHINE.....		EA		3	*	*	*		*	126	32
			5310-184-8966	AN960PD8 <88044>	..WASHER,FLAT.....		HD		3	*	*	*		*	126	
			5305-273-5349	AN525-832R22 <88044>	..SCREW,MACHINE.....		EA		1	*	*	*		*	126	33
			5310-184-8966	AN960PD8 <88044>	..WASHER,FLAT.....		HD		1	*	*	*		*	126	
					---*---											
P	O		1560-564-5732	S1650-62002-5 <78286>	...DOOR ASSEMBLY,CEILING.....		EA		1	*	*	*		*	126	34
P	O	R	1560-564-5731	S1650-62002-2 <78286>	..PANEL ASSEMBLY,CEILING.....		EA		1	*	2	2		*	126	35
					ATTACHING PARTS											
			5305-576-1499	AN525-832R16 <88044>	..SCREW,MACHINE.....		EA		2	*	*	*		*	126	36
			5310-184-8966	AN960PD8 <88044>	..WASHER,FLAT.....		HD		2	*	*	*		*	126	
			5305-281-8874	AN525-832R18 <88044>	..SCREW,MACHINE.....		EA		4	*	*	*		*	126	37
			5310-184-8966	AN960PD8 <88044>	..WASHER,FLAT.....		HD		4	*	*	*		*	126	
			5305-273-5349	AN525-832R22 <88044>	..SCREW,MACHINE.....		EA		1	*	*	*		*	126	38
			5310-184-8966	AN960PD8 <88044>	..WASHER,FLAT.....		HD		1	*	*	*		*	126	
					---*---											
				S1650-62343-9 <78286>	SKID RAIL INSTALLATION SEE.. FIG.115 FOR NHA										127	
X2	F			S1650-62136-6 <78286>	.SKID.....		EA		2						127	1
					ATTACHING PARTS											
			5305-285-2619	AN507DD1032R8 <88044>	.SCREW,MACHINE.....		HD		2	*	*	*		*	127	2
					---*---											
X2	F			S1650-62136-7 <78286>	.SKID.....		EA		1						127	3
					ATTACHING PARTS											
			5305-285-2619	AN507DD1032R8 <88044>	.SCREW,MACHINE.....		HD		5	*	*	*		*	127	4
					---*---											
X2	F			S1650-62136-8 <78286>	.SKID.....		EA		1						127	5
					ATTACHING PARTS											
			5305-285-2619	AN507DD1032R8 <88044>	.SCREW,MACHINE.....		HD		7	*	*	*		*	127	6
					---*---											
X2	F			S1650-62136-10 <78286>	.SKID.....		EA		1						127	7
					ATTACHING PARTS											
			5305-285-2619	AN507DD1032R8 <88044>	.SCREW,MACHINE.....		HD		9	*	*	*		*	127	8
					---*---											
X2	F			S1650-62136-9 <78286>	.SKID.....		EA		3						127	9
					ATTACHING PARTS											
				MS20426B6 <96906>	.RIVET.....		EA		3						127	
					---*---											
X2	F			S1650-62136-12 <78286>	.SKID.....		EA		12						127	11
					ATTACHING PARTS											
			5305-285-2619	AN507DD1032R8 <88044>	.SCREW,MACHINE.....		HD		3	*	*	*		*	127	12
					---*---											
X2	F			S1650-62136-11 <78286>	.SKID.....		EA		1						127	13

(1) SOURCE, MAINT AND REC CODE (a) SOURCE CODE	(b) MAINT LEVEL	(c) REC CODE	(2) FEDERAL STOCK NUMBER	REFERENCE NUMBER	(3) DESCRIPTION	MODELS USABLE ON CH-34C	(4) UNIT OF ISSUE	(5) QTY INC IN UNIT PACK	(6) QTY INC IN UNIT	(7) 30-DAY DS GS MAINT ALW (a) 1-20	(b) 21-50	(c) 51-100	(8) 1-YR ALW PER 100 EQUIP CNTGCY	(9) DEPOT MAINT ALW PER 100 EQUIP	(10) ILLUSTRATION (a) FIG NO	(b) ITEM NO
					CONTINUED										127	13
					ATTACHING PARTS											
			5305-285-2619	AN507DD1032R8 <88044>	.SCREW,MACHINE.....		HD		3	*	*	*		*	127	14
					---*---											
X2	F			S1650-62136-13 <78286>	.SKID.....		EA		1						127	15
					ATTACHING PARTS											
			5305-285-2619	AN507DD1032R8 <88044>	.SCREW,MACHINE.....		HD		6	*	*	*		*	127	16
					---*---											
X2	F			S1650-62136-14 <78286>	.SKID.....		EA		1						127	17
					ATTACHING PARTS											
			5305-285-2619	AN507DD1032R8 <88044>	.SCREW,MACHINE.....		HD		3	*	*	*		*	127	18
					---*---											
X2	F			S1650-62136-15 <78286>	.SKID.....		EA		4						127	19
					ATTACHING PARTS											
			5305-285-2619	AN507DD1032R8 <88044>	.SCREW,MACHINE.....		HD		3	*	*	*		*	127	20
					---*---											
				S1655-61005 <78286>	FORWARD SECTION ELECTRICAL... WIRING INSTALLATION SEE FIG.40 FOR NHA										128	
				S1655-65005 <78286>	.CANOPY EQUIPMENT AND..... WIRING INSTALLATION SEE FIG.129 FOR BREAKDOWN				1						128	1
				S1655-61400-1 <78286>	.CABIN EQUIPMENT AND WIRING.. INSTALLATION USBL EFF 53-4475 THRU 56-4312 SEE FIG.131 FOR BREAKDOWN				1						128	2
				S1655-61900 <78286>	.CABIN EQUIPMENT AND WIRING.. INSTALLATION USBL EFF 56-4313 AND SUBSEQUENT SEE FIG.132 FOR BREAKDOWN				1						128	
				S1655-61903 <78286>	.INSTRUMENT PANEL WIRING..... ASSEMBLY SEE FIG.135 FOR BREAKDOWN				1						128	3
				S1655-61420 <78286>	.FIRE DETECTION WIRING..... INSTALLATION SEE FIG.136 FOR BREAKDOWN				1						128	4
				S1655-61190 <78286>	.WIRING INSTALLATION-IGNITION				1						128	
P	F		5915-325-9375	10-55085-2 <77820>	..FILTER,RADIO INTERFERENCE..		EA		1	*	*	*		*	128	5
					ATTACHING PARTS											
			5305-282-2712	AN503-6-8 <88044>	..SCREW,MACHINE.....		HD		3	*	*	*		*	128	
			5310-188-7721	AN960PD6 <88044>	..WASHER,FLAT.....		HD		3	*	*	*		*	128	
			5310-081-8087	MS21044N06 <96906>	..NUT,SELF-LOCKING,HEXAGON...		EA		3	*	*	*		*	128	
			5305-282-2712	AN503-6-8 <88044>	..SCREW,MACHINE.....		HD		1	*	*	*		*	128	
			5310-188-7721	AN960PD6 <88044>	..WASHER,FLAT.....		HD		1	*	*	*		*	128	
			5310-081-8087	MS21044N06 <96906>	..NUT,SELF-LOCKING,HEXAGON...		EA		1	*	*	*		*	128	
					---*---											

(1) SOURCE, MAINT AND REC CODE (a) SOURCE CODE	(b) MAINT CODE	(c) REC CODE	(2) FEDERAL STOCK NUMBER	REFERENCE NUMBER		(3) DESCRIPTION	MODELS USABLE ON CH-34C	(4) UNIT OF ISSUE	(5) QTY INC IN UNIT PACK	(6) QTY INC IN UNIT	(7) 30-DAY DS/GS MAINT ALW (a) 1-20	(b) 21-50	(c) 51-100	(8) 1-YR ALW PER 100 EQUIP CNTGCY	(9) DEPOT MAINT ALW PER 100 EQUIP	(10) ILLUSTRATION (a) FIG NO	(b) ITEM NO
P	F		1560-586-6799	S1655-61184	<78286>	..CONDUIT ASSEMBLY,ELECTRIC.. RECEPTACLE		EA		1	*	*	*		*	128	6
P	F		1560-586-6800	S1655-61185	<78286>	..CONDUIT ASSEMBLY,..... ELECTRICAL JUNCTION TO VIBRATOR		EA		2	*	*	*		*	128	7
P	F		1560-586-6801	S1655-61186	<78286>	..CONDUIT ASSEMBLY,ELECTRIC.. RECEPTACLE		EA		1	*	*	*		*	128	8
			2925-141-9736	VJR24B5	<01843>	..COIL,IGNITION ... RPL-BY 2925-561-5028										129	
P	O		2925-561-5028	AN4181-1	<88044>	..COIL,IGNITION..... RPLS-- 2925-141-9736 ATTACHING PARTS		EA		1	*	*	*	5	*	128	9
			5305-180-3326	AN525-10R16	<88044>	..SCREW,MACHINE.....		HD		3	*	*	*		*	128	
			5310-183-4406	AN960PD10	<88044>	..WASHER,FLAT.....		HD		3	*	*	*		*	128	
						---*---											
AF	F			S1655-61192	<78286>	..BOX ASSEMBLY-JUNCTION..... ATTACHING PARTS		EA		1						128	10
			5305-180-0012	AN525-10R10	<88044>	..SCREW,MACHINE.....		HD		2	*	*	*		*	128	11
			5310-183-4406	AN960PD10	<88044>	..WASHER,FLAT.....		HD		6	*	*	*		*	128	
						---*---											
			5325-174-5317	MS35489-4	<96906>	...GROMMET,RUBBER.....		HD		1	*	*	*		*	128	12
			5325-263-6632	MS35489-6	<96906>	...GROMMET,RUBBER.....		HD		2	*	*	*		*	128	13
MF	O			AN3436-2-2	<88044>	...TERMINAL BOARD..... ATTACHING PARTS		EA		2						128	14
						AR 5940-950-1610 TERM BOARD											
			5305-889-2997	MS35206-215	<96906>	...SCREW,MACHINE.....		HD		2	*	*	*		*	128	15
			5310-550-5009	MS15795-704	<96906>	...WASHER,FLAT.....		HD		2					*	128	
			5310-088-0551	MS21044N04	<96906>	...NUT,SELF-LOCKING,HEXAGON..		EA		2	*	*	*		*	128	
X2	F			S1655-61192-2	<78286>	...COVER.....		EA		1						128	16
				97-5107-14S7S	<02660>	..RECEPTACLE..... ATTACHING PARTS		EA		1						128	17
			5305-889-2999	MS35206-217	<96906>	..SCREW,MACHINE.....		HD		3	*	*	*		*	128	
			5310-550-5009	MS15795-704	<96906>	..WASHER,FLAT.....		HD		3					*	128	
			5310-088-0551	MS21044N04	<96906>	..NUT,SELF-LOCKING,HEXAGON...		EA		3	*	*	*		*	128	
			5305-174-0702	AN500A4-8	<88044>	..SCREW,MACHINE.....		EA		1	*	*	*		*	128	
			5310-550-5009	MS15795-704	<96906>	..WASHER,FLAT.....		HD		1					*	128	
			5310-088-0551	MS21044N04	<96906>	..NUT,SELF-LOCKING,HEXAGON...		EA		1	*	*	*		*	128	
						---*---											
P	F		1560-586-6802	S1655-61187	<78286>	..CONDUIT ASSEMBLY,ELECTRIC.. RECEPTACLE		EA		1	*	*	*		*	128	18
P	F		5935-651-1604	MS3100K14S7S	<96906>	..CONNECTOR,RECEPTACLE..... ELECTRICAL ATTACHING PARTS		EA		1	*	*	*		*	128	19
			5305-889-2997	MS35206-215	<96906>	..SCREW,MACHINE.....		HD		3	*	*	*		*	128	
			5310-187-2408	AN960PD4	<88044>	..WASHER,FLAT.....		HD		3					*	128	
			5310-088-0551	MS21044N04	<96906>	..NUT,SELF-LOCKING,HEXAGON...		EA		3	*	*	*		*	128	
			5305-531-0298	MS35265-15	<96906>	..SCREW,MACHINE.....		HD		1					*	128	
			5310-187-2408	AN960PD4	<88044>	..WASHER,FLAT.....		HD		1					*	128	
			5310-088-0551	MS21044N04	<96906>	..NUT,SELF-LOCKING,HEXAGON...		EA		1	*	*	*		*	128	
						---*---											

(1) SOURCE, MAINT AND REC CODE (a) SOURCE CODE	(b) MAINT LEVEL	(c) REC CODE	(2) FEDERAL STOCK NUMBER	REFERENCE NUMBER	(3) DESCRIPTION	MODELS USABLE ON CH-34C	(4) UNIT OF ISSUE	(5) QTY INC IN UNIT PACK	(6) QTY INC IN UNIT	(7) 30-DAY DS GS MA NT ALW (a) 1-20	(b) 21-50	(c) 51-100	(8) 1-YR ALW PER 100 EQUIP CNTGCY	(9) DEPOT MAINT ALW PER 100 EQUIP	(10) ILLUSTRATION (a) FIG NO	(b) ITEM NO
P	F		5975-609-3075	S1655-61183-1	<78286> ..CONDUIT ASSEMBLY.....		EA		1	*	*	*		*	128	20
P	O		5930-327-7563	AN3212-1	<88044> ..SWITCH,ROTARY.....		EA		1	*	*	*		*	128	21
				S1655-61151	<78286> .WIRING INSTALLATION-NOSE.... DOOR				1						128	
P	F		4730-613-4867	EFM18	<35918> ..FLEXIBLE CONNECTION.....		EA		AR	*	*	*		*	128	22
P	O		1560-639-0601	S1655-61162-3	<78286> ..SHIELD ASSEMBLY..... ATTACHING PARTS		EA		1	*	*	*		*	128	23
			5320-582-3304	MS20600AD4WZ	<96906> ..RIVET,BLIND..... ---*---		EA		4	*	*	*		*	128	
				S1655-61156	<78286> ..LIGHT INSTALLATION-NOSE.... DOOR LANDING				1						128	
P	O	R	6220-283-9767	G6250-1	<72914> ...LIGHT,LANDING,AIRCRAFT.... SEE FIG.128A FOR BREAKDOWN ATTACHING PARTS		EA		1	2	2	3	36	*	128	24
			5305-281-8527	AN525-832R8	<88044> ...SCREW,MACHINE.....		HD		4	*	*	*		*	128	
			5310-184-8966	AN960PD8	<88044> ...WASHER,FLAT..... ---*---		HD		4	*	*	*		*	128	
				S1655-61660-1	<78286> .FUEL GAGING SYSTEM WIRING... INSTALLATION SEE FIG.147 FOR BREAKDOWN				1						128	25
				S1655-61600	<78286> .ELECTRONIC COMPARTMENT..... EQUIPMENT AND WIRING INSTALLATION USBL EFF 53-4475 THRU 56-4312 SEE FIG.138 FOR BREAKDOWN				1						128	26
				S1655-61901	<78286> .ELECTRONIC COMPARTMENT..... EQUIPMENT AND WIRING INSTALLATION USBL EFF 56-4313 AND SUBSEQUENT SEE FIG.139 FOR BREAKDOWN				1						128	
P	O	R	6220-283-9767	G6250-1	<72914> LIGHT,LANDING,AIRCRAFT SEE.. FIG.128 FOR NHA		EA		1	REF	REF	REF	REF	*	128A	
P	H		6220-672-1607	A6881	<72914> .COVER ASSEMBLY,TERMINAL.....		EA		1	*	*	*		*	128A	1
P	H		5940-446-2856	A6906	<72914> .TERMINAL BLOCK..... ATTACHING PARTS		EA		1	*	*	*		*	128A	3
P	H		6220-980-7301	A7807	<72914> .STRIP ASSEMBLY..... ---*---		EA		1	*	*	*		*	128A	4
P	H		6220-506-1301	D6924	<72914> .LIGHT UNIT ASSEMBLY.....		EA		1	*	*	*		*	128A	6
P	H		6220-524-6444	B6702	<72914> ..RING,LAMP RETAINER..... ATTACHING PARTS		EA		1	*	*	*		*	128A	8
P	H		5305-841-8148	AN507-632R14	<88044> ..SCREW,MACHINE..... ---*---		EA		3	*	*	*		*	128A	9
			6240-557-3065	MS25241-4581	<96906> ..LAMP,INCANDESCENT.....		EA		1	2	2	3	41	*	128A	11
			5310-045-3299	MS35338-42	<96906> ..WASHER,LOCK.....		HD		1	*	*	*		*	128A	14
X1				D6923	<72914> ..CANOPY ASSEMBLY,LIGHT.....		EA		1						128A	15

(1) SOURCE, MAINT AND REC CODE (a) SOURCE CODE	(b) MAINT CODE	(c) REC CODE	(2) FEDERAL STOCK NUMBER	REFERENCE NUMBER	(3) DESCRIPTION	MODELS USABLE ON CH-34C	(4) UNIT OF ISSUE	(5) QTY INC IN UNIT PACK	(6) QTY INC IN UNIT	(7) 30-DAY DS/GS MAINT ALW (a) 1-20	(b) 21-50	(c) 51-100	(8) 1-YR ALW PER 100 EQUIP CNTGCY	(9) DEPOT MAINT ALW PER 100 EQUIP	(10) ILLUSTRATION (a) FIG NO	(b) ITEM NO
P	H		6220-624-0509	B6535-1	<72914> .BOX ASSEMBLY,RELAY CONTROL..		EA		1	*	*	*		*	128A	16
P	H		5970-798-3757	B6886	<72914> ..INSULATOR,RELAY BOX.....		EA		1	*	*	*		*	128A	17
					ATTACHING PARTS											
			5310-045-4007	MS35338-41	<96906> ..WASHER,LOCK.....		HD		2	*	*	*		*	128A	19
					---*---											
P	H		5945-500-6693	B6885-1	<72914> .RELAY ASSEMBLY.....		EA		1	*	*	*		*	128A	20
					ATTACHING PARTS											
			5305-282-4851	AN507-440-8	<88044> .SCREW,MACHINE.....		EA		2	*	*	*		*	128A	21
					---*---											
P	H		6220-896-6239	A6937	<72914> ..POST,RELAY BOX.....		EA		2	*	*	*		*	128A	23
					ATTACHING PARTS											
			5305-984-4988	MS35206-228	<96906> ..SCREW,MACHINE.....		HD		2	*	*	*		*	128A	24
			5310-045-3299	MS35338-42	<96906> ..WASHER,LOCK.....		HD		6	*	*	*		*	128A	25
					---*---											
X1				A81864	<72914> ..RELAY,CONTROLLABLE LIGHT...		EA		4						128A	26
X1				A3969	<72914> ..STRAP,CONNECTOR.....		EA		4						128A	27
P	H		5310-439-8851	A6904	<72914> ..SPACER,RELAY.....		EA		1	*	*	*		*	128A	28
					ATTACHING PARTS											
			5310-045-4007	MS35338-41	<96906> ..WASHER,LOCK.....		HD		8	*	*	*		*	128A	30
					---*---											
X1				B6889-1	<72914> ..WIRE,ELECTRICAL.....		EA		1						128A	31
X1				B6888	<72914> ..WIRE ASSEMBLY,LONG.....		EA		1						128A	32
X1				6905	<72914> ..PLATE,MOUNTING,RELAY.....		EA		1						128A	41
P	H		6220-524-6447	D6890-1	<72914> .GEAR BOX ASSEMBLY SEE.....		EA		1	*	*	*		*	128A	42
					FIG.128A <SHEET 2 OF 4>											
					FOR BREAKDOWN											
					ATTACHING PARTS											
			5305-810-8209	AN507-632R8	<88044> .SCREW,MACHINE.....		EA		2	*	*	*		*	128A	43
			5310-045-4007	MS35338-41	<96906> .WASHER,LOCK.....		HD		2	*	*	*		*	128A	44
			5310-176-8133	AN340-6	<88044> .NUT,PLAIN,HEXAGON.....		HD		2	*	*	*		*	128A	45
					---*---											
P	H		6220-524-6446	D6542	<72914> .PLATE ASSEMBLY,LANDING.....		EA		1	*	*	*		*	128A	46
P	H		5310-798-9086	A6927	<72914> ..CLAMP,WIRE.....		EA		1	*	*	*		*	128A	47
					ATTACHING PARTS											
			5305-889-3116	MS35206-213	<96906> ..SCREW,MACHINE.....		HD		2	*	*	*		*	128A	48
			5310-543-2410	MS35338-40	<96906> ..WASHER,LOCK.....		HD		2	*	*	*		*	128A	49
					---*---											
P	H		5310-799-6288	A6926	<72914> ..SPACER,EXTEND,PIVOT SHAFT..		EA		2	*	*	*		*	128A	50
P	H		6220-520-2603	A6930	<72914> ..SHAFT AND BLOCK ASSEMBLY...		EA		1	*	*	*		*	128A	51
					ATTACHING PARTS											
			5305-810-8209	AN507-632R8	<88044> ..SCREW,MACHINE.....		EA		2	*	*	*		*	128A	52
			5310-045-4007	MS35338-41	<96906> ..WASHER,LOCK.....		HD		2	*	*	*		*	128A	53
			5310-176-8133	AN340-6	<88044> ..NUT,PLAIN,HEXAGON.....		HD		2	*	*	*		*	128A	54
					---*---											
X1				A6901	<72914> ...BLOCK.....		EA		1						128A	55
X1				A6928	<72914> ...SHAFT.....		EA		1						128A	56
X1				D6543	<72914> ..BASE.....		EA		1						128A	58
P	H		6220-506-1302	D6940	<72914> .ROTATING MECHANISM SEE.....		EA		1	*	*	*		*	128A	59
					FIG.128A <SHEET 3 OF 4>											
					FOR BREAKDOWN											
P	H		6220-506-1300	B6938	<72914> ..COVER,LANDING LIGHT.....		EA		1	*	*	*		*	128A	60
					ATTACHING PARTS											

(1) SOURCE, MAINT AND REC CODE (a) SOURCE CODE	(b) MAINT LEVEL	(c) REC CODE	(2) FEDERAL STOCK NUMBER	REFERENCE NUMBER		(3) DESCRIPTION	MODELS USABLE ON CH-34C	(4) UNIT OF ISSUE	(5) QTY INC IN UNIT PACK	(6) QTY INC IN UNIT	(7) 30-DAY DS GS MAINT ALW (a) 1-20	(b) 21-50	(c) 51-100	(8) 1-YR ALWPER 100 EQUIP CNTGCY	(9) DEPOT MAINT ALWPER 100 EQUIP	(10) ILLUSTRATION (a) FIG NO	(b) ITEM NO
			5310-579-5554	MS35333-35	<96906>	..WASHER,LOCK.....		HD		7	*	*	*		*	128A	62
						---*---											
P	H		6220-830-4385	A6946	<72914>	..SPRING,BUMPER.....		EA		1	*	*	*		*	128A	63
P	H		6220-980-7298	A6935	<72914>	..GUIDE,BUMPER,TOP.....		EA		1	*	2	2		*	128A	64
P	H		6220-980-7299	A6936	<72914>	..GUIDE,BUMPER.....		EA		1	*	*	*		*	128A	65
						ATTACHING PARTS											
			5305-151-0696	AN507-632R20	<88044>	..SCREW,MACHINE.....		HD		1	*	*	*		*	128A	66
			5310-081-8087	MS21044N06	<96906>	..NUT,SELF-LOCKING,HEXAGON...		EA		1	*	*	*		*	128A	67
						---*---											
P	H		6220-980-7297	A6934	<72914>	..BUMPER.....		EA		1	*	*	*		*	128A	68
P	H		6220-980-7296	A6933	<72914>	..SHAFT,BUMPER.....		EA		1	*	*	*		*	128A	69
			5930-646-4619	MS25085-1	<96906>	..SWITCH,SENSITIVE.....		EA		2	*	*	*		*	128A	70
P	H		5930-536-0783	A6948	<72914>	..ADAPTER,SWITCH ACTUATOR....		EA		1	*	*	*		*	128A	71
P	H		5930-536-0782	A6947	<72914>	..ADAPTER,SWITCH ACTUATOR....		EA		1	*	*	*		*	128A	72
P	H		6220-980-7295	A6932	<72914>	..INSULATOR,SWITCH.....		EA		1	*	*	*		*	128A	73
						ATTACHING PARTS											
			5305-151-3563	AN515-2-12	<88044>	..SCREW,MACHINE.....		HD		2	*	*	*		*	128A	74
			5310-579-5554	MS35333-35	<96906>	..WASHER,LOCK.....		HD		2	*	*	*		*	128A	75
						---*---											
P	H		6105-807-0296	86529	<72914>	..MOTOR,DIRECT CURRENT SEE.. FIG.128A <SHEET 4 OF 4> FOR BREAKDOWN		EA		1	*	2	2	22	*	128A	76
						ATTACHING PARTS											
			5305-889-2997	MS35206-215	<96906>	..SCREW,MACHINE.....		HD		2	*	*	*		*	128A	77
			5310-045-4007	MS35338-41	<96906>	..WASHER,LOCK.....		HD		2	*	*	*		*	128A	78
						---*---											
P	H		6220-326-5591	A6954	<72914>	..BEARING AND BRIDGE ASSEMBLY		EA		1	*	*	*		*	128A	79
						ATTACHING PARTS											
			5310-045-4007	MS35338-41	<96906>	..WASHER,LOCK.....		HD		2	*	*	*		*	128A	81
						---*---											
P	H		6220-141-8514	A6580	<72914>	..GEAR,WORM WHEEL.....		EA		1	*	*	*		*	128A	82
P	H		6220-326-5587	A6573	<72914>	..PINION GEAR,LIGHT.....		EA		1	*	*	*		*	128A	84
P	H		6220-204-2804	A6582	<72914>	..GEAR,WORM WHEEL.....		EA		1	*	*	*		*	128A	85
P	H		6220-446-2889	A7798	<72914>	..BEARING ASSEMBLY.....		EA		1	*	*	*		*	128A	87
P	H		6220-830-4688	A6585A	<72914>	..WORM AND SHAFT ASSEMBLY....		EA		1	*	*	*		*	128A	90
P	H		3120-086-8127	HSBY5-9DU	<81629>	..BEARING,PLAIN,SELF-ALIGNING		EA		1	*	*	*		*	128A	91
P	H		3110-286-1221	P576-32	<72914>	..BEARING,PINION SHAFT.....		EA		1	*	2	2	14	*	128A	92
P	H		3120-826-8541	A6873	<72914>	..BEARING,SLEEVE.....		EA		1	*	*	*		*	128A	93
P	H		6220-326-5594	B6880	<72914>	..RELAY ASSEMBLY,LAMP.....		EA		1	*	*	*		*	128A	94
						ATTACHING PARTS											
			5310-045-4007	MS35338-41	<96906>	..WASHER,LOCK.....		HD		2	*	*	*		*	128A	96
						---*---											
X1				A6878	<72914>	...COVER.....		EA		1						128A	97
						ATTACHING PARTS											
			5310-579-5554	MS35333-35	<96906>	...WASHER,LOCK.....		HD		2	*	*	*		*	128A	99
						---*---											
X1				A6877	<72914>	...INSULATOR,RELAY COVER.....		EA		1						128A	100
X1				A6870	<72914>	...RELAY ASSEMBLY.....		EA		1						128A	101
						ATTACHING PARTS											
			5305-889-2997	MS35206-215	<96906>	...SCREW,MACHINE.....		HD		2	*	*	*		*	128A	102
			5310-088-0551	MS21044N04	<96906>	...NUT,SELF-LOCKING,HEXAGON..		EA		4	*	*	*		*	128A	103
						---*---											

(1) SOURCE, MAINT AND REC CODE (a) SOURCE CODE	(b) MAINT CODE	(c) RECOVERY CODE	(2) FEDERAL STOCK NUMBER	REFERENCE NUMBER	(3) DESCRIPTION	MODELS USABLE ON CH-34C	(4) UNIT OF ISSUE	(5) QTY INC IN UNIT PACK	(6) QTY INC IN UNIT	(7) 30-DAY DS GS MAINT ALW (a) 1-20	(b) 21-50	(c) 51-100	(8) 1-YR ALW PER 100 EQUIP CNTGCY	(9) DEPOT MAINT ALW PER 100 EQUIP	(10) ILLUSTRATION (a) FIG NO	(b) ITEM NO
X1				A6876	<72914> ...INSULATOR,RELAY,HOUSING...		EA		1						128A	104
			5325-174-5317	MS35489-4	<96906> ...GROMMET,RUBBER.....		HD		2	*	*	*		*	128A	105
X1				A6879	<72914> ...HOUSING.....		EA		1						128A	106
X2	H		6220-780-6448	D6903-1	<72914> ..GEAR BOX,LIGHT.....		EA		1	*	*	*		*	128A	107
X2	H			B6908	<72914> ..COVER.....		EA		1						128A	108
					ATTACHING PARTS											
			5310-551-7770	MS35337-40	<96906> ..WASHER,LOCK.....		EA		2	*	*	*		*	128A	110
					---*---											
P	H		6220-980-7290	A6874	<72914> ..INSULATOR.....		EA		1	*	*	*		*	128A	111
P	H		6105-519-1828	B6530	<72914> ..MOTOR,DIRECT CURRENT SEE.. FIG.128A <SHEET 4 OF 4> FOR BREAKDOWN		EA		1	*	2	2	26	*	128A	112
					ATTACHING PARTS											
			5305-889-2997	MS35206-215	<96906> ..SCREW,MACHINE.....		HD		2	*	*	*		*	128A	113
			5310-551-7770	MS35337-40	<96906> ..WASHER,LOCK.....		EA		2	*	*	*		*	128A	114
					---*---											
X2	H			A6915	<72914> ..PLATE,COVER.....		EA		1						128A	115
					ATTACHING PARTS											
			5305-151-2081	AN507-440R6	<88044> ..SCREW,MACHINE.....		EA		2	*	*	*		*	128A	116
					---*---											
P	H		6220-520-2600	A6540	<72914> ..ACTUATOR ASSEMBLY.....		EA		1	*	*	*		*	128A	117
					ATTACHING PARTS											
			5305-889-3116	MS35206-213	<96906> ..SCREW,MACHINE.....		HD		2	*	*	*		*	128A	118
			5310-543-2410	MS35338-40	<96906> ..WASHER,LOCK.....		HD		2	*	*	*		*	128A	119
					---*---											
P	H		6220-326-5595	B6921	<72914> ..SECTOR GEAR,CONTROLLABLE...		EA		1	*	*	*		*	128A	120
					ATTACHING PARTS											
			5305-810-8209	AN507-632R8	<88044> ..SCREW,MACHINE.....		EA		2	*	*	*		*	128A	121
			5310-167-0859	MS35336-9	<96906> ..WASHER,LOCK.....		EA		2	*	*	*		*	128A	122
					---*---											
P	H		5930-331-1789	1SM1	<91929> ..SWITCH,SENSITIVE.....		EA		1	*	*	*		*	128A	123
P	H		5930-536-0781	A6917	<72914> ..ADAPTER,SWITCH ACTUATOR....		EA		1	*	*	*		*	128A	124
P	H		5970-798-9090	A6939	<72914> ..INSULATOR.....		EA		2	*	*	*		*	128A	125
					ATTACHING PARTS											
			5305-954-3938	MS35206-207	<96906> ..SCREW,MACHINE.....		HD		2	*	*	*		*	128A	126
			5310-579-5554	MS35333-35	<96906> ..WASHER,LOCK.....		HD		2	*	*	*		*	128A	127
					---*---											
P	H		6220-980-7293	A6916	<72914> ..PLATE,ADJUSTING.....		EA		1	*	*	*		*	128A	128
P	H		6220-980-7292	A6914	<72914> ..POST,ROTATE SWITCH.....		EA		2	*	*	*		*	128A	129
					ATTACHING PARTS											
			5305-984-4978	MS35206-221	<96906> ..SCREW,MACHINE.....		EA		2	*	*	*		*	128A	130
			5310-543-2410	MS35338-40	<96906> ..WASHER,LOCK.....		HD		2	*	*	*		*	128A	131
			5310-990-5680	MS45901-1	<96906> ..WASHER,FLAT.....		EA		1	*	*	*		*	128A	132
					---*---											
P	H		6220-502-0746	A6912	<72914> ..CONTACT,ELECTRICAL.....		EA		1	*	*	*		*	128A	133
					ATTACHING PARTS											
			5305-889-3116	MS35206-213	<96906> ..SCREW,MACHINE.....		HD		1	*	*	*		*	128A	134
			5310-543-2410	MS35338-40	<96906> ..WASHER,LOCK.....		HD		1	*	*	*		*	128A	135
					---*---											
P	H		5970-045-1948	A6909	<72914> ..BLOCK,CONTROL.....		EA		1	*	*	*		*	128A	136
					ATTACHING PARTS											
			5310-543-2410	MS35338-40	<96906> ..WASHER,LOCK.....		HD		1	*	*	*		*	128A	138

(1) SOURCE, MAINT AND REC CODE (a) SOURCE CODE	(b) MAINT LEVEL	(c) REC CODE	(2) FEDERAL STOCK NUMBER	REFERENCE NUMBER		(3) DESCRIPTION	MODELS USABLE ON CH-34C	(4) UNIT OF ISSUE	(5) QTY INC IN UNIT PACK	(6) QTY INC IN UNIT	(7) 30-DAY DS GS MAINT ALW (a) 1-20	(b) 21-50	(c) 51-100	(8) 1-YR ALW PER 100 EQUIP CNTGCY	(9) DEPOT MAINT ALW PER 100 EQUIP	(10) ILLUSTRATION (a) FIG NO	(b) ITEM NO
P	H		6220-980-7291	A6913	<72914>	..STUD.....		EA		1	*	*	*		*	128A	139
						---*---											
P	H		6220-980-7294	A6918	<72914>	..POST,COVER.....		EA		1	*	*	*		*	128A	140
						ATTACHING PARTS											
			5305-889-2999	MS35206-217	<96906>	..SCREW,MACHINE.....		HD		1	*	*	*		*	128A	141
			5310-543-2410	MS35338-40	<96906>	..WASHER,LOCK.....		HD		1	*	*	*		*	128A	142
						---*---											
P	H		6220-204-2512	A6595	<72914>	..GEAR,HELICAL.....		EA		1	*	*	*		*	128A	143
P	H		6220-326-5588	A6588	<72914>	..WORM AND SHAFT ASSEMBLY....		EA		1	*	*	*		*	128A	145
P	H		5310-798-9086	A6927	<72914>	..CLAMP,WIRE.....		EA		1	*	*	*		*	128A	146
						ATTACHING PARTS											
			5305-889-3116	MS35206-213	<96906>	..SCREW,MACHINE.....		HD		2	*	*	*		*	128A	147
			5310-543-2410	MS35338-40	<96906>	..WASHER,LOCK.....		HD		2	*	*	*		*	128A	148
						---*---											
P	H		6220-523-9406	B6925	<72914>	..SHAFT ASSEMBLY.....		EA		1	*	*	*		*	128A	149
X1				A6892	<72914>	...CONTACT ELECTRICAL.....		EA		1						128A	150
			5310-045-4007	MS35338-41	<96906>	...WASHER,LOCK.....		HD		1	*	*	*		*	128A	151
X1				A6598	<72914>	...BUSS,ROTATE PIVOT SHAFT...		EA		1						128A	152
X1				A6596	<72914>	...INSULATOR.....		EA		2						128A	153
				A6910	<72914>	...WIRE ASSEMBLY,LAMP.....		EA		1						128A	154
						ATTACHING PARTS											
			5310-045-4007	MS35338-41	<96906>	...WASHER,LOCK.....		HD		1	*	*	*		*	128A	156
						---*---											
X1				A6590	<72914>	...WHEEL ASSEMBLY,FINAL.....		EA		1						128A	157
						ATTACHING PARTS											
X1				A6597	<72914>	...SHAFT,ROTATE.....		EA		1						128A	159
P	H		5330-663-6880	A6920	<72914>	..WASHER,NONMETALLIC.....		EA		2	*	*	*		*	128A	160
P	H		6220-896-6327	A6919	<72914>	..BEARING,ROTATE PIVOT.....		EA		2	*	2	2		*	128A	161
P	H		3120-826-8544	A6943	<72914>	..BEARING,SLEEVE.....		EA		1	*	*	*		*	128A	162
P	H		3120-826-8541	A6873	<72914>	..BEARING,SLEEVE.....		EA		1	*	*	*		*	128A	163
P	H		6220-896-6314	A7799	<72914>	..SPACER,BEARING.....		EA		1	*	*	*		*	128A	164
P	H		6220-896-6319	A2728-3	<72914>	..BEARING,SLEEVE.....		EA		2	*	*	*		*	128A	165
X2	H			G6528	<72914>	..CASTING,MAIN.....		EA		1						128A	166
P	H		6105-141-8184	A6577	<72914>	..GEAR,WORM.....NOTE 1		EA		1	*	*	*		*	128A	167
P	H		6220-326-5590	A6594	<72914>	..WORM,CONTROLLABLE....NOTE 2		EA		1	*	*	*		*	128A	
P	H		5915-968-4748	RNF10410-3	<72914>	..FILTER,RADIO NOISE.....		EA		1	*	*	*		*	128A	169
X1				A5991	<72914>	..SPACER,SLEEVE.....		EA		2						128A	170
						ATTACHING PARTS											
			5305-889-2997	MS35206-215	<96906>	..SCREW,MACHINE.....		HD		2	*	*	*		*	128A	171
			5310-551-7770	MS35337-40	<96906>	..WASHER,LOCK.....		EA		2	*	*	*		*	128A	172
						---*---											
P	H		6105-635-5878	C3A1203	<25140>	..MOTOR,DIRECT CURRENT.NOTE 1		EA		1	*	*	*		*	128A	
P	H		6105-635-5879	C25A523	<25140>	..MOTOR.....NOTE 2		EA		1	*	*	*		*	128A	
			5310-551-7770	MS35337-40	<96906>	...WASHER,LOCK.....		EA		2	*	*	*		*	128A	174
P	H		5970-799-6225	A9D729	<25140>	...INSULATOR.....NOTE 1		EA		1	*	*	*		*	128A	175
P	H		5940-439-8892	A32D569	<25140>	...TERMINAL,GROUND.....NOTE 2		EA		1	*	*	*		*	128A	176
P	H		5940-546-6741	A32D549	<72914>	...TERMINAL.....		EA		2	*	*	*		*	128A	177
P	H		5310-798-9088	A21D632	<25140>	...WASHER.....		EA		1	*	*	*		*	128A	178
P	H		5310-798-9085	A21D600	<25140>	...WASHER,UPSET INSULATING...		EA		2	*	*	*		*	128A	179
P	H		5970-310-2346	A9D680	<25140>	...INSULATOR,BUSHING.....		EA		2	*	*	*		*	128A	181
P	H		5970-799-6225	A9D729	<25140>	...INSULATOR,ELECTRICAL.....		EA		2	*	*	*		*	128A	182
P	H		5977-238-6852	A40D553	<25140>	....BRUSH,ELECTRICAL CONTACT.		EA		2	*	*	*		*	128A	183

(1) SOURCE, MAINT AND REC CODE (a) SOURCE CODE	(b) MAINT LEVEL	(c) REC CODE	(2) FEDERAL STOCK NUMBER	REFERENCE NUMBER	(3) DESCRIPTION	MODELS USABLE ON CH-34C	(4) UNIT OF ISSUE	(5) QTY INC IN UNIT PACK	(6) QTY INC IN UNIT	(7) 30 DAY DS GS MAINT ALW (a) 1-20	(b) 21-50	(c) 51-100	(8) 1 YR ALW PER 100 EQUIP CNTGCY	(9) DEPOT MAINT ALW PER 100 EQUIP	(10) ILLUSTRATION (a) FIG NO	(b) ITEM NO
P	H		6220-863-3879	A190D586 <72914>	....SPRING..... NOTE 1 U/O 6105-807-0296 NOTE 2 U/O 6105-519-1828		EA		2	*	*	*		*	128A	184
				S1655-65005 <78286>	CANOPY EQUIPMENT AND WIRING.. INSTALLATION SEE FIG.128 FOR NHA										129	
P	F		5940-825-7865	397-5 <94640>	.COVER,TERMINAL BLOCK.....		EA		1						129	1
				AN3436-2-5 <88044>	.TERMINAL BOARD ASSEMBLY..... ATTACHING PARTS		EA		1						129	
			5305-889-2997	MS35206-215 <96906>	.SCREW,MACHINE.....		HD		2	*	*	*		*	129	
			5310-550-5009	MS15795-704 <96906>	.WASHER,FLAT.....		HD		2					*	129	
			5310-088-0551	MS21044N04 <96906>	.NUT,SELF-LOCKING,HEXAGON.... ---*---		EA		2	*	*	*		*	129	
X2	O		5930-731-8905	S1655-61416 <78286>	.SWITCH ASSEMBLY.....		EA		1	*	*	*		*	129	2
X2	O			S1655-61416-1 <78286>	..SUPPORT.....		EA		1						129	3
P	F		5930-615-6816	MS25089-4F <96906>	..SWITCH,PUSH.....		EA		1	*	*	*		*	129	4
				S1655-65118 <78286>	.SWITCH INSTALLATION,..... INSPECTION LIGHT				1						129	
P	O		5930-296-5845	C1006 <81640>	..SWITCH,PUSH.....		EA		1	*	*	*		*	129	5
				S1655-65123 <78286>	..NAMEPLATE..... ATTACHING PARTS		EA		1						129	
				MS20470B3 <96906>	..RIVET..... ---*---		EA		3						129	
				S1655-66160 <78286>	.SWITCH INSTALLATION,..... AUXILIARY SERVO LIGHT				1						129	
P	O		5930-296-5845	C1006 <81640>	..SWITCH,PUSH.....		EA		1	*	*	*		REF	129	8
				S1655-65123-1 <78286>	..NAMEPLATE.....		EA		1						129	
				S1655-65120 <78286>	.LIGHT INSTALLATION.....				1						129	
P	O		6220-283-9364	AN3092-3 <88044>	..LIGHT,NAVIGATIONAL,AIRCRAFT		EA		1	*	*	*		*	129	10
			6220-801-3871	AN3033-12 <88044>	..LIGHT,NAVIGATIONAL,..... AIRCRAFT RPL-BY 6220-283-9337										129	
P	F		6220-283-9337	AN3033-9 <88044>	..LIGHT,NAVIGATIONAL,..... AIRCRAFT RPLS-- 6220-801-3871		EA		1	*	2	2		*	129	
			6220-688-5053	MS25219-4 <96906>	..LIGHT,NAVIGATIONAL,..... AIRCRAFT RPL-BY 6220-548-0313										129	
P	F		6220-548-0313	MS25219-1 <96906>	..LIGHT,NAVIGATIONAL,..... AIRCRAFT RPLS-- 6220-688-5053 ATTACHING PARTS		EA		1	*	*	*		*	129	
			5305-156-2861	AN505-4R8 <88044>	..SCREW,MACHINE..... ---*---		HD		2	*	*	*		*	129	11

(1) SOURCE, MAINT AND REC CODE (a) SOURCE CODE	(b) MAINT LEVEL	(c) REC CODE	(2) FEDERAL STOCK NUMBER	REFERENCE NUMBER		(3) DESCRIPTION	MODELS USABLE ON CH-34C	(4) UNIT OF ISSUE	(5) QTY INC IN UNIT PACK	(6) QTY INC IN UNIT	(7) 30-DAY DS GS MAINT ALW (a) 1-20	(b) 21-50	(c) 51-100	(8) 1-YR ALWPER 100 EQUIP CNTGCY	(9) DEPOT MAINT ALWPER 100 EQUIP	(10) ILLUSTRATION (a) FIG NO	(b) ITEM NO
				AN898-1	<88044>	..GASKET.....		EA		1						129	12
P	O		1560-559-4759	S1655-61129	<78286>	..GASKET.....		EA		1	*	*	*		*	129	13
P	O		6220-166-9786	AN3093-1	<88044>	..LENS,AIRCRAFT,NAVIGATIONAL. LIGHT		EA		1	*	*	*		*	129	14
			6240-155-8714	MS25231-313	<96906>	..LAMP,INCANDESCENT.....		EA		1	REF	REF	REF		*	129	15
				S1655-65140	<78286>	.PANEL INSTALLATION,..... OVERHEAD SWITCH AND CIRCUIT BREAKER CONTROL				1						129	
AH	F			S1655-65141	<78286>	..WIRING ASSEMBLY,OVER HEAD.. CONTROL PANEL SEE FIG. 130 FOR BREAKDOWN CODE A ATTACHING PARTS		EA		1						129	16
			5305-281-8527	AN525-832R8	<88044>	..SCREW,MACHINE.....		HD		10	*	*	*		*	129	17
			5310-184-8966	AN960PD8	<88044>	..WASHER,FLAT.....		HD		10	*	*	*		*	129	
			5305-281-8527	AN525-832R8	<88044>	..SCREW,MACHINE.....		HD		2	*	*	*		*	129	18
			5310-184-8966	AN960PD8	<88044>	..WASHER,FLAT.....		HD		2	*	*	*		*	129	
						---*---											
				S1655-61850-1	<78286>	.BOX INSTALLATION,DC POWER... JUNCTION				1						129	
AF	F			S1655-61852	<78286>	..BOX ASSEMBLY-DC POWER..... JUNCTION ATTACHING PARTS		EA		1						129	19
			5305-282-0138	AN525-416R18	<88044>	..SCREW,MACHINE.....		EA		3	*	*	*		*	129	20
			5310-187-2354	AN960PD416	<88044>	..WASHER,FLAT.....		HD		3	*	*	*		*	129	
			5310-184-9001	AN960PD416L	<88044>	..WASHER,FLAT.....		HD		3	*	*	*		*	129	
			5306-182-1960	AN4H12A	<88044>	..BOLT,MACHINE.....		HD		1	*	*	*		*	129	21
			5310-187-2354	AN960PD416	<88044>	..WASHER,FLAT.....		HD		1	*	*	*		*	129	
			5310-184-9001	AN960PD416L	<88044>	..WASHER,FLAT.....		HD		1	*	*	*		*	129	
						---*---											
				S1655-61814-4	<78286>	...BUS BAR.....		EA		1						129	
AF	F			NAS43DD10-16	<80205>	...SPACER,SLEEVE.....		EA		2						129	23
P	O		5945-660-9315	MS24171D1	<96906>	...RELAY,SOLENOID..... ATTACHING PARTS		EA		1	*	*	*		*	129	24
				AN525D416-6	<88044>	...SCREW.....		EA		2						129	25
			5310-187-2354	AN960PD416	<88044>	...WASHER,FLAT.....		HD		2	*	*	*		*	129	
			5310-275-2021	MS20364D428A	<96906>	...NUT,SELF-LOCKING,HEXAGON..		EA		2					*	129	
						---*---											
P	O		2925-555-5349	AN3025-300	<88044>	...CUTOUT RELAY,ENGINE..... GENERATOR RPLS-- 2925-203-8732, 2925-710-9361 ATTACHING PARTS		EA		1	*	2	2	29	*	129	26
				AN525D1032	<88044>	...SCREW.....		EA		4						129	27
			5310-183-4406	AN960PD10	<88044>	...WASHER,FLAT.....		HD		4	*	*	*		*	129	
			5310-905-3801	MS21083D3	<96906>	...NUT,SELF-LOCKING,HEXAGON..				4					*	129	
						---*---											
MF	O			150-666104-10-0170	<00624>	...HOSE ASSEMBLY,..... TETRAFLUOROETHYLENE RPLS-- 4720-587-6307, 4720-587-6310,& 4720-625-8719 MAKEFR		EA		2						129	28

(1) SOURCE, MAINT AND REC CODE (a) SOURCE	(b) MAINT	(c) REC	(2) FEDERAL STOCK NUMBER	REFERENCE NUMBER	(3) DESCRIPTION	MODELS USABLE ON CH-34C	(4) UNIT OF ISSUE	(5) QTY INC IN UNIT PACK	(6) QTY INC IN UNIT	(7) 30-DAY DS GS MAINT ALW (a) 1-20	(b) 21-50	(c) 51-100	(8) 1-YR ALW PER 100 EQUIP CNTGCY	(9) DEPOT MAINT ALW PER 100 EQUIP	(10) ILLUSTRATION (a) FIG NO	(b) ITEM NO
					CONTINUED										129	28
					AR 4720-857-1730 HOSE											
					2 EA 4730-052-9520 ELBOW											
					2 EA 4730-967-9517 NUT											
					2 EA 4730-967-9525 SLEEVE											
					2 EA 5340-726-3009 PLUG											
			5325-281-1557	MS35489-17 <96906>	...GROMMET,RUBBER.....		EA		2	*	*	*		*	129	29
P	F		5975-624-8559	S1655-61853-6 <78286>	...BOX ASSEMBLY,ELECTRICAL...		EA		1	*	*	*		*	129	30
P	F		5975-992-0595	S1655-61853-7 <78286>	....COVER ASSEMBLY.....		EA		1	*	*	*		*	129	31
P	F		5325-584-0024	2600-2S <71286>	.....STUD ASSEMBLY,TURNLOCK..		EA		1	*	*	*		*	129	33
					FASTENER											
				212-12BR <71286>	....RECEPTACLE.....		EA		10						129	34
					ATTACHING PARTS											
				MS20470AD3 <96906>	....RIVET.....		EA		2						129	
					---*---											
				NAS43DD4-37 <80205>	..SPACER,SLEEVE.....		EA		3						129	
				NAS43DD4-37 <80205>	..SPACER,SLEEVE.....		EA		1						129	
P	O		5310-772-6513	A8565-821 <78553>	.NUT,SHEET SPRING.....		EA		4						129	38
					ATTACHING PARTS											
				MS20470B3 <96906>	.RIVET.....		EA		2						129	
					---*---											
P	O		5310-772-6513	A8565-821 <78553>	.NUT,SHEET SPRING.....		EA		1						129	40
					ATTACHING PARTS											
				MS20470B3 <96906>	.RIVET.....		EA		2						129	41
					---*---											
					CODE A											
					USBL EFF 53-4475 THRU 53-4554											
					WIRING ASSEMBLY-OVERHEAD.....										130	
					CONTROL PANEL											
AH	F			S1655-65141 <78286>	.WIRING ASSEMBLY,OVERHEAD....		EA								130	
					CONTROL PANEL SEE FIG.129											
					FOR NHA											
			5310-185-0113	AN961-516 <88044>	.WASHER,FLAT.....		EA		4	*	*	*		*	130	1
			5310-167-0671	MS35338-102 <96906>	.WASHER,FLAT.....		EA		2					*	130	
			5310-558-4848	MS35690-511 <96906>	.NUT,PLAIN,HEXAGON.....		EA		2	*	*	*		*	130	
MF	F			SS7014 <78286>	.BUS BAR.....		EA		1						130	2
					MAKEFR											
					AR 9535-167-2151 COPPER SH											
AF	F			1655-65148-3 <78286>	.BAR ASSEMBLY.....		EA								130	
MF	F			S1655-65148-4 <78286>	..BUS BAR.....		EA		1						130	
					MAKEFR											
					AR 9535-167-2151 COPPER SH											
AF	F			S1655-65148-1 <78286>	..BUS BAR ASSEMBLY.....		EA		1						130	
MF	F			S1655-65148-2 <78286>	..BUS BAR.....		EA		1						130	
					MAKEFR											
					AR 9335-167-2151 COPPER SH											

(1) SOURCE, MAINT AND REC CODE (a) SOURCE CODE	(b) MAINT LEVEL	(c) REC CODE	(2) FEDERAL STOCK NUMBER	(3) DESCRIPTION REFERENCE NUMBER			MODELS USABLE ON CH-34C	(4) UNIT OF ISSUE	(5) QTY INC IN UNIT PACK	(6) QTY INC IN UNIT	(7) 30-DAY DS GS MAINT ALW (a) 1-20	(b) 21-50	(c) 51-100	(8) 1-YR ALW PER 100 EQUIP CNTGCY	(9) DEPOT MAINT ALW PER 100 EQUIP	(10) ILLUSTRATION (a) FIG NO	(b) ITEM NO
MF	F			S1630-62056-141	<78286>	.TUBE ASSEMBLY RPLS--..... 1560-767-7957 MAKEFR AR 4710-278-8740 TUBE 2 EA 4730-277-5358 NUT 2 EA 4730-287-1028 SLEEVE		EA		1						130	3
				SS7015-432	<78286>	.BUS BAR.....		EA		1						130	
AF	F			S1655-65148-3	<78286>	.BAR ASSEMBLY.....		EA		1						130	
MF	F			S1655-65148-2	<78286>	..BUS BAR..... MAKEFR AR 9535-167-2151 COPPER SH		EA		1						130	
MF	F			S1655-65148-4	<78286>	..BUS BAR..... MAKEFR AR 9535-167-2151 COPPER SH		EA		1						130	
			5935-280-1956	AN3102E28-15S	<88044>	.CONNECTOR,RECEPTACLE.....		EA		1	*	*	*		*	130	5
				11	<94614>	.PREWAXED CORD.....		EA		AR						130	
				S1655-65147-3	<78286>	.RELAY AND RESISTOR..... INSTALLATION,FUEL WINDSHIELD WIPER WARNING AND NAVIGATION LIGHTS				1						130	
P	O		5945-258-3424	AN3320-1	<88044>	..RELAY,ARMATURE.....		EA		2	*	*	*		*	130	7
P	O		5945-643-6551	636-172	<71688>	..RELAY,ARMATURE.....		EA		1	*	*	*		*	130	7A
P	O		5945-237-1348	AN3314-1	<88044>	..RELAY,ARMATURE.....		EA		1	*	*	*		*	130	7B
P	F		1560-774-5030	S1655-65117	<78286>	..STUD.....		EA		2	*	*	*		*	130	8
			5310-184-8966	AN960PD8	<88044>	..WASHER,FLAT.....		HD		4	*	*	*		*	130	9
			5310-811-3494	MS21044N08	<96906>	..NUT,SELF-LOCKING,HEXAGON...		EA		4	*	*	*		*	130	
			5340-727-1891	NAS43DD3-128	<80205>	..SPACER,SLEEVE.....		EA		4	*	*	*		*	130	10
P	H		5905-752-7341	KILR 26RW20B200	<81349>	..RESISTOR,FIXED,WIRE WOUND..		EA		1					*	130	11
P	F		5905-892-6734	RW21V820	<81349>	..RESISTOR,FIXED,WIRE WOUND..		EA		5	*	*	*		*	130	12
				S1655-65142	<78286>	.PANEL ASSEMBLY,SWITCH..... CIRCUIT BREAKER AND COCKPIT DOME LIGHT CONTROL		EA		1						130	
				S1655-65142-1	<78286>	.PANEL ASSEMBLY,SWITCH..... CIRCUIT BREAKER AND COCKPIT DOME LIGHT CONTROL		EA		1						130	
				S1655-65142-2	<78286>	.PANEL ASSEMBLY,SWITCH..... CIRCUIT BREAKER AND COCKPIT DOME LIGHT CONTROL		EA		1						130	
				S1655-65142-3	<78286>	.PANEL ASSEMBLY,SWITCH..... CIRCUIT BREAKER AND COCKPIT DOME LIGHT CONTROL		EA		1						130	
P	O		5950-093-7494	A2953	<72914>	..CONTAINER..... ATTACHING PARTS		EA		1	*	*	*		*	130	14
			5340-990-9300	EAB700D6	<81996>	..CLAMP,LOOP.....		EA		2	*	*	*		*	130	15
			5305-079-1159	AN526DD832R8	<88044>	..SCREW,MACHINE.....		HD		2	*	*	*		*	130	
			5310-184-8966	AN960PD8	<88044>	..WASHER,FLAT.....		HD		4	*	*	*		*	130	
			5905-941-6440	MS21083D08	<96906>	..NUT,SELF-LOCKING,HEXAGON...				2					*	130	
						---*---											
P	O		6240-155-7836	MS25237-327	<96906>	..LAMP,INCANDESCENT.....		EA		5	7	19	37	893	*	130	16
P	O		5950-093-7494	A2953	<72914>	..CONTAINER..... ATTACHING PARTS		EA		1	*	*	*		REF	130	17
			5340-990-9300	EAB700D6	<81996>	..CLAMP,LOOP.....		EA		2	*	*	*		*	130	18

(1) SOURCE, MAINT AND REC CODE (a) SOURCE CODE	(b) MAINT LEVEL	(c) REC CODE	(2) FEDERAL STOCK NUMBER	(3) DESCRIPTION REFERENCE NUMBER			MODELS USABLE ON CH-34C	(4) UNIT OF ISSUE	(5) QTY INC IN UNIT PACK	(6) QTY INC IN UNIT	(7) 30-DAY DS GS MAINT ALW (a) 1-20	(b) 21-50	(c) 51-100	(8) 1 YR ALW PER 100 EQUIP CNTGCY	(9) DEPOT MAINT ALW PER 100 EQUIP	(10) ILLUSTRATION (a) FIG NO	(b) ITEM NO
			5305-079-1159	AN526DD832R8	<88044>	..SCREW,MACHINE.....		HD		2	*	*	*		*	130	
			5310-184-8966	AN960PD8	<88044>	..WASHER,FLAT.....		HD		4	*	*	*		*	130	
			5905-941-6440	MS21083D08	<96906>	..NUT,SELF-LOCKING,HEXAGON...				2					*	130	
						---*---											
P	O		6240-295-1617	334	<24446>	..LAMP,INCANDESCENT.....		EA		5	*	*	*		*	130	19
P	O		6220-988-5310	MS17245-1	<96906>	..LIGHT,COCKPIT,AIRCRAFT.....		EA		AR	*	2	2		*	130	20
						ATTACHING PARTS											
			5305-889-3000	MS35206-230	<96906>	..SCREW,MACHINE.....		HD		2	*	*	*		*	130	21
			5310-188-7721	AN960PD6	<88044>	..WASHER,FLAT.....		HD		2	*	*	*		*	130	
			5310-857-5547	MS21044D06	<96906>	..NUT,SELF-LOCKING,HEXAGON...		EA		2	*	*	*		*	130	
						---*---											
P	O		6210-519-2653	MS25010-4A	<96906>	..LIGHT,PANEL.....		EA		10	*	REF	REF	REF	REF	130	22
P	O		6240-155-7836	MS25237-327	<96906>	..LAMP,INCANDESCENT.....		EA		10	REF	REF	REF	REF	REF	130	
P	F		5355-518-4585	KT100	<86535>	..KNOB.....		EA		5	*	*	*		*	130	23
P	O		5930-305-2750	XW20336-1	<70255>	..SWITCH,ROTARY.....		EA		1	*	*	*		*	130	24
						ATTACHING PARTS											
			5305-249-0531	AN565D6H5	<88044>	..SETSCREW.....		EA		2	*	*	*		*	130	
						---*---											
P	F		5905-665-8271	CM14327	<12697>	..RESISTOR,VARIABLE.....		EA		1	*	*	*		*	130	25
						ATTACHING PARTS											
			5305-249-0531	AN565D6H5	<88044>	..SETSCREW.....		EA		2	*	*	*		*	130	
						---*---											
P	F		5905-665-8313	CM14326	<12697>	..RESISTOR,VARIABLE.....		EA		1	*	*	*		*	130	26
						ATTACHING PARTS											
			5305-249-0531	AN565D6H5	<88044>	..SETSCREW.....		EA		2	*	*	*		*	130	
						---*---											
P	O		5905-665-8270	CM14328	<12697>	..RESISTOR,VARIABLE.....		EA		1	*	*	*		*	130	27
						ATTACHING PARTS											
			5305-249-0531	AN565D6H5	<88044>	..SETSCREW.....		EA		2	*	*	*		*	130	
						---*---											
P	O		5905-500-8569	CM14366	<12697>	..RESISTOR,VARIABLE.....		EA		1	*	*	*		*	130	28
						ATTACHING PARTS											
			5305-249-0531	AN565D6H5	<88044>	..SETSCREW.....		EA		2	*	*	*		*	130	
						---*---											
			5930-655-1513	AN3021-1	<88044>	..SWITCH,TOGGLE.....		EA		2	*	*	*		*	130	29
			5930-615-7885	MS25105-21	<96906>	..SWITCH,TOGGLE.....		EA		1	*	*	*		*	130	30
						ATTACHING PARTS											
			5305-249-0531	AN565D6H5	<88044>	..SETSCREW.....		EA		2	*	*	*		*	130	
						---*---											
			5930-655-1582	MS35059-23	<96906>	..SWITCH,TOGGLE.....		EA		1	*	*	*		*	130	31
			5930-655-1514	MS35058-22	<96906>	..SWITCH,TOGGLE.....		EA		1	*	*	*		*	130	32
			5930-615-9376	MS35059-21	<96906>	..SWITCH,TOGGLE.....		EA		1	*	*	*		*	130	33
			5930-655-1514	MS35058-22	<96906>	..SWITCH,TOGGLE.....		EA		2	*	*	*		*	130	34
P	O		6220-988-5310	MS17245-1	<96906>	..LIGHT,COCKPIT,AIRCRAFT.....		EA		AR	*	REF	REF		REF	130	35
						ATTACHING PARTS											
			5305-989-7434	MS35207-263	<96906>	..SCREW,MACHINE.....				2					*	130	
			5310-183-4406	AN960PD10	<88044>	..WASHER,FLAT.....		HD		2	*	*	*		*	130	
			5310-877-5797	MS21044N3	<96906>	..NUT,SELF-LOCKING,HEXAGON...		EA		2	*	*	*		*	130	
						---*---											
			5930-617-9718	MS25224-3	<96906>	..GUARD,SWITCH		EA		1	*	*	*		*	130	36
			5930-655-1520	MS35058-28	<96906>	..SWITCH,TOGGLE.....		EA		1	*	*	*		*	130	37
			5930-655-1514	MS35058-22	<96906>	..SWITCH,TOGGLE.....		EA		1	*	*	*		*	130	38

(1) SOURCE, MAINT AND REC CODE (a) SOURCE CODE	(b) MAINT LEVEL	(c) REC CODE	(2) FEDERAL STOCK NUMBER	REFERENCE NUMBER		(3) DESCRIPTION	MODELS USABLE ON CH-34C	(4) UNIT OF ISSUE	(5) QTY INC IN UNIT PACK	(6) QTY INC IN UNIT	(7) 30-DAY DS GS MAINT ALW (a) 1-20	(b) 21-50	(c) 51-100	(8) 1-YR ALW PER 100 EQUIP CNTGCY	(9) DEPOT MAINT ALW PER 100 EQUIP	(10) ILLUSTRATION (a) FIG NO	(b) ITEM NO
			5930-655-1516	MS35058-24	<96906>	..SWITCH,TOGGLE.....		EA		1	*	*	*		*	130	39
			5930-655-1513	AN3021-1	<88044>	..SWITCH,TOGGLE.....		EA		1	*	*	*		*	130	40
			5930-617-9718	MS25224-3	<96906>	..GUARD,SWITCH		EA		1	*	*	*		*	130	41
			5930-615-7880	MS35059-26	<96906>	..SWITCH,TOGGLE.....		EA		1	*	*	*		*	130	42
			5305-282-2712	AN503-6-8	<88044>	..SCREW,MACHINE.....		HD		1	*	*	*		*	130	43
			5310-187-2398	AN960PD6L	<88044>	..WASHER,FLAT.....		HD		2	*	*	*		*	130	
			5310-081-8087	MS21044N06	<96906>	..NUT,SELF-LOCKING,HEXAGON...		EA		1	*	*	*		*	130	
				S1655-61338-1	<78286>	..GUARD.....		EA		1						130	
			5930-655-1514	MS35058-22	<96906>	..SWITCH,TOGGLE.....		EA		1	*	*	*		*	130	45
			5930-615-9376	MS35059-21	<96906>	..SWITCH,TOGGLE.....		EA		1	*	*	*		*	130	46
P	O		5950-093-7494	A2953	<72914>	..CONTAINER.....		EA		1	*	*	*		REF	130	47
			5930-636-2286	MS25104-21	<96906>	..SWITCH,TOGGLE.....		EA		1	*	*	*		*	130	
						ATTACHING PARTS											
			5340-990-9301	EAB700D7	<81996>	..CLAMP,LOOP.....		EA		2	*	*	*		*	130	48
			5305-079-1159	AN526DD832R8	<88044>	..SCREW,MACHINE.....		HD		2	*	*	*		*	130	
			5310-184-8966	AN960PD8	<88044>	..WASHER,FLAT.....		HD		2	*	*	*		*	130	
			5310-877-5797	MS21044N3	<96906>	..NUT,SELF-LOCKING,HEXAGON...		EA		2					*	130	
						---*---											
P	O		6240-155-7836	MS25237-327	<96906>	..LAMP,INCANDESCENT.....		EA		5	REF	REF	REF	REF	REF	130	49
P	O		5950-093-7494	A2953	<72914>	..CONTAINER.....		EA		1	*	*	*		REF	130	50
			5930-636-2286	AN3227-1	<88044>	..SWITCH,TOGGLE.....		EA		1	*	*	*		*	130	
						ATTACHING PARTS											
			5340-990-9301	EAB700D7	<81996>	..CLAMP,LOOP.....		EA		2	*	*	*		*	130	51
			5305-079-1159	AN526DD832R8	<88044>	..SCREW,MACHINE.....		HD		2	*	*	*		*	130	
			5310-184-8966	AN960PD8	<88044>	..WASHER,FLAT.....		HD		2	*	*	*		*	130	
			5310-905-3801	MS21083D3	<96906>	..NUT,SELF-LOCKING,HEXAGON...				2					*	130	
						---*---											
P	F		6240-295-1617	334	<24446>	..LAMP,INCANDESCENT.....		EA		5	*	*	*		REF	130	52
P	O		5925-173-7158	MS25017-5	<96906>	..CIRCUIT BREAKER.....		EA		1	*	*	*		*	130	53
P	O		5925-173-7156	MS25017-15	<96906>	..CIRCUIT BREAKER.....		EA		1	*	*	*		*	130	54
P	O		5925-173-7159	MS25017-50	<96906>	..CIRCUIT BREAKER.....		EA		2	*	*	*		*	130	55
P	O		5925-258-9715	MS25017-25	<96906>	..CIRCUIT BREAKER.....		EA		1	*	*	*		*	130	
P	O		5925-173-7158	MS25017-5	<96906>	..CIRCUIT BREAKER.....		EA		21	*	*	*		REF	130	56
P	O		5925-173-7155	MS25017-10	<96906>	..CIRCUIT BREAKER.....		EA		4	*	*	*		*	130	57
P	O		5925-271-8820	MS25017-35	<96906>	..CIRCUIT BREAKER.....		EA		1	*	*	*		*	130	58
P	O		5925-173-7155	MS25017-10	<96906>	..CIRCUIT BREAKER.....		EA		1	*	*	*		REF	130	59
P	O		5925-271-8659	MS25017-20	<96906>	..CIRCUIT BREAKER.....		EA		3	*	*	*		*	130	60
P	O		5925-173-7159	MS25017-50	<96906>	..CIRCUIT BREAKER.....		EA		1	*	*	*		REF	130	61
P	O		5925-173-7158	MS25017-5	<96906>	..CIRCUIT BREAKER.....		EA		1	*	*	*		REF	130	62
						ATTACHING PARTS											
			5305-855-6303	AN526DD632R6	<88044>	..SCREW,MACHINE.....		EA		78	*	*	*		*	130	63
						---*---											
P	F		5340-270-8539	51338	<61864>	..BUTTON,PLUG.....		EA		4	*	*	*		*	130	64
			5305-855-6303	AN526DD632R6	<88044>	..SCREW,MACHINE.....		EA		8	*	*	*		*	130	65
			5310-857-5547	MS21D44006	<96906>	..NUT,SELF-LOCKING,HEXAGON...		EA		8	*	*	*		*	130	
P	O		5920-199-3973	413003	<75915>	..FUSE,CARTRIDGE.....		EA		1	*	*	*		*	130	66
P	O		5920-156-4477	442001	<75915>	..FUSEHOLDER.....		EA		12	*	*	*		*	130	
P	O		5920-199-3973	413003	<75915>	..FUSE,CARTRIDGE.....		EA		1	*	*	*		REF	130	67
P	O		5920-156-4477	442001	<75915>	..FUSEHOLDER.....		EA		2	*	*	*		REF	130	
MF	O			S1607-5742-2	<78286>	..PLATE,IDENTIFICATION		EA		1	*	*	*		*	130	68
						MAKEFR											
						AR MILD8634TYPE2-2IN WIDE											

(1) SOURCE, MAINT AND REC CODE (a) SOURCE	(b) MAINT LEVEL	(c) REC CODE	(2) FEDERAL STOCK NUMBER	REFERENCE NUMBER	(3) DESCRIPTION	MODELS USABLE ON CH-34C	(4) UNIT OF ISSUE	(5) QTY INC IN UNIT PACK	(6) QTY INC IN UNIT	(7) 30-DAY DS GS MAINT ALW (a) 1-20	(b) 21-50	(c) 51-100	(8) 1-YR ALW PER 100 EQUIP CNTGCY	(9) DEPOT MAINT ALW PER 100 EQUIP	(10) ILLUSTRATION (a) FIG NO	(b) ITEM NO
X2	O		5930-615-6731	MS25224-1	<96906> ..GUARD,SWITCH.....		EA		1	*	*	*		*	130	69
			5930-655-1513	AN3021-1	<88044> ..SWITCH,TOGGLE.....		EA		1	*	*	*		*	130	
P	O		5920-199-3973	413003	<75915> ..FUSE,CARTRIDGE.....		EA		1	*	*	*		REF	130	70
P	O		5920-156-4477	442001	<75915> ..FUSEHOLDER.....		EA		3	*	*	*		*	130	
P	O		6220-299-7136	MS25356-1	<96906> ..LIGHT,DOME RPLS--..... 6220-299-7431, 6220-512-6648, 6620-836-1696,& 6620-875-6579 ATTACHING PARTS		EA		1	4	9	19		*	130	71
			5305-889-3000	MS35206-230	<96906> ..SCREW,MACHINE.....		HD		4	*	*	*		*	130	72
			5310-187-2398	AN960PD6L	<88044> ..WASHER,FLAT.....		HD		4	*	*	*		*	130	
			5310-081-8087	MS21044N06	<96906> ..NUT,SELF-LOCKING,HEXAGON... ---*---		EA		4	*	*	*		*	130	
P	O		6220-283-9732	57A3A011	<80064> ...LENS,DOME LIGHT.....		EA		1	*	*	*		*	130	
P	O		6240-155-7764	MS25232-307	<96906> ..LAMP,INCANDESCENT.....		EA		1	*	*	*		*	130	73
P	C		6240-155-7932	MS25235R311	<96906> ..LAMP,INCANDESCENT.....		EA		1	*	*	*		*	130	74
AF	F			S1655-65144-7	<78286> ..PANEL,OVERHEAD SWITCH.....		EA		1						130	75
				S1655-65143	<78286> ..BOX ASSEMBLY.....		EA		1						130	
AH	H			S1655-65144-6	<78286> ..PANEL,OVERHEAD SWITCH.....		EA		1						130	
				S1655-65144-1	<78286> ...PANEL ASSEMBLY USBL EFF.. 53-4475 THRU 54-3006		EA		1						130	76
				S1655-65144-5	<78286> ...PANEL ASSEMBLY USBL EFF.. 54-3007 & SUBSEQUENT ATTACHING PARTS		EA		1						130	
				MS20470AD4	<96906> ...RIVET.....		EA		5						130	
				16187-417	<71286> ...STUD ASSEMBLY..... ---*---		EA		8						130	
X2	F		1560-931-2305	S1655-65145	<78286> ...PANEL ASSEMBLY USBL EFF.. 53-4475 THRU 56-4312		EA		1	*	*	*		*	130	78
X2	F			S1655-65145-3	<78286> ...PANEL ASSEMBLY USBL EFF.. 56-4313 THRU 57-1741		EA		1						130	
				S1655-65145-5	<78286> ...PANEL ASSEMBLY.....CODE A ATTACHING PARTS		EA		1						130	
				MS20470AD4	<96906> ...RIVET.....		EA		7						130	
				16187-417	<71286> ...STUD..... ---*---		EA		9						130	
				S1655-65145-2	<78286> ....HINGE..... ATTACHING PARTS		EA		1						130	
				MS20470B4	<96906> ....RIVET..... ---*---		EA		7						130	
				S1655-65146	<78286> ...PANEL ASSEMBLY USBL EFF.. 53-4475 THRU 57-1741		EA		1						130	
				S1655-65146-3	<78286> ...PANEL ASSEMBLY.....CODE A ATTACHING PARTS		EA		1						130	
				MS20470AD4	<96906> ...RIVET.....		EA		4						130	
				16187-417	<71286> ...STUD ASSEMBLY.....		EA		4						130	
P	F		5325-282-0624	2600-3	<71286> ...STUD ASSEMBLY,TURNLOCK.... FASTENER ---*---		EA		3	*	*	*		REF	130	
				S1655-65146-2	<78286> ....HINGE..... ATTACHING PARTS		EA		1						130	85

(1) SOURCE, MAINT AND REC CODE (a) SOURCE CODE	(b) MAINT LEVEL	(c) REC CODE	(2) FEDERAL STOCK NUMBER	REFERENCE NUMBER		(3) DESCRIPTION	MODELS USABLE ON CH-34C	(4) UNIT OF ISSUE	(5) QTY INC IN UNIT PACK	(6) QTY INC IN UNIT	(7) 30-DAY DS GS MAINT ALW (a) 1-20	(b) 21-50	(c) 51-100	(8) 1-YR ALW PER 100 EQUIP CNTGCY	(9) DEPOT MAINT ALW PER 100 EQUIP	(10) ILLUSTRATION (a) FIG NO	(b) ITEM NO
				MS20470AD4	<96906>	....RIVET.....		EA		5						130	86
						---*---											
P	F		5325-505-4798	212-12	<71286>	...RECEPTACLE,TURNLOCK.....		EA		21	*	*	*		REF	130	87
						FASTENER											
						ATTACHING PARTS											
				MS20426AD3	<96906>	...RIVET.....		EA		2						130	
						---*---											
				S1655-65131	<78286>	...TERMINAL BLOCK.....		EA		21						130	
P	F		5325-505-4798	212-12	<71286>	...RECEPTACLE,TURNLOCK.....		EA		3	*	*	*		REF	130	90
						FASTENER											
						ATTACHING PARTS											
				MS20426AD3	<96906>	...RIVET.....		EA		2						130	91
						---*---											
						CODE A											
						USBL EFF 57-1742 & SUBSEQUENT											
				S1655-61400-1	<78286>	CABIN EQUIPMENT AND WIRING...										131	
						INSTALLATION USBL EFF											
						53-4475 THRU 56-4312 SEE											
						FIG.128 FOR NHA											
MF	O			MS18029-1S6	<96906>	.COVER,TERMINAL BOARD.....		EA		1						131	1
						MAKEFR											
						AR 5940-943-0786 TERM BOARD											
MF	O			MS18029-1S7	<96906>	.COVER,TERMINAL BOARD.....		EA		1						131	
						MAKEFR											
						AR 5940-943-0786 TERM BOARD											
				AN3436-2-7	<88044>	.TERMINAL BOARD.....		EA		1						131	
						ATTACHING PARTS											
			5305-889-2999	MS35206-217	<96906>	.SCREW,MACHINE.....		HD		2	*	*	*		*	131	
			5310-550-5009	MS15795-704	<96906>	.WASHER,FLAT.....		HD		2					*	131	
			5310-088-0551	MS21044N04	<96906>	.NUT,SELF-LOCKING,HEXAGON....		EA		2	*	*	*		*	131	
						---*---											
MF	O			MS18029-1S4	<96906>	.TERMINAL.....		EA		1						131	2
						MAKEFR											
						AR 5940-907-5939 TERM BOARD											
						ATTACHING PARTS											
			5305-899-2999	MS35206-217	<88044>	.SCREW,MACHINE.....		HD		2					*	131	
			5310-550-5009	MS15795-704	<96906>	.WASHER,FLAT.....		HD		2					*	131	
			5310-088-0551	MS21044N04	<96906>	.NUT,SELF-LOCKING,HEXAGON....		EA		2	*	*	*		*	131	
						---*---											
				S1655-61164	<78286>	.SWITCH INSTALLATION-ENGINE..				1						131	
						PRIMER											
P	F		5930-258-4624	C1002	<81640>	..SWITCH,PUSH.....		EA		1	*	*	*		*	131	3
P	F		2925-613-9685	S1655-61165	<78286>	..NAMEPLATE,ENGINE PRIMER....		EA		1	*	2	2		*	131	4
				S1655-61130	<78286>	.BOX INSTALLATION.....				1						131	
						HYDRO-MECHANICAL CLUTCH											
						SWITCH											

(1) SOURCE, MAINT AND REC CODE (a) SOURCE CODE	(b) MAINT LEVEL	(c) REC LEVEL	(2) FEDERAL STOCK NUMBER	REFERENCE NUMBER	(3) DESCRIPTION	MODELS USABLE ON CH-34C	(4) UNIT OF ISSUE	(5) QTY INC IN UNIT PACK	(6) QTY INC IN UNIT	(7) 30-DAY DS/GS MAINT ALW (a) 1-20	(b) 21-50	(c) 51-100	(8) 1-YR ALW PER 100 EQUIP CNTGCY	(9) DEPOT MAINT ALW PER 100 EQUIP	(10) ILLUSTRATION (a) FIG NO	(b) ITEM NO
			5305-889-3000	MS35206-230 <96906>	..SCREW,MACHINE.....		HD		1	*	*	*		*	131	5
			5310-188-7721	AN960PD6 <88044>	..WASHER,FLAT.....		HD		2	*	*	*		*	131	
			5310-188-7721	AN960PD6 <88044>	..WASHER,FLAT.....		HD		1	*	*	*		*	131	
			5310-081-8087	MS21044N06 <96906>	..NUT,SELF-LOCKING,HEXAGON...		EA		1	*	*	*		*	131	
AF	F			S1655-61131 <78286>	..BOX ASSEMBLY-SWITCH.....		EA		1						131	6
					ATTACHING PARTS											
			5305-984-6195	MS35206-247 <96906>	..SCREW,MACHINE.....		HD		2					*	131	7
			5310-184-8966	AN960PD8 <88044>	..WASHER,FLAT.....		HD		2	*	*	*		*	131	
				S35337-42 <96906>	..WASHER,LOCK.....		EA		2						131	
					---*---											
			5930-655-1514	MS35058-22 <96906>	...SWITCH,TOGGLE.....		EA		1	*	*	*		*	131	8
			5930-655-1516	MS35058-24 <96906>	...SWITCH,TOGGLE.....		EA		1	*	*	*		*	131	
P	O		6210-519-0448	MS25041-6 <96906>	...LIGHT ASSEMBLY.....		EA		1	*	*	*		REF	131	9
P	O		6240-155-8714	MS25231-313 <96906>	...LAMP,INCANDESCENT.....		EA		1	REF	REF	REF		REF	131	
				S1655-61133 <78286>	...NAMEPLATE.....		EA		1						131	
P	F		5930-639-0662	S1655-61336-1 <78286>	...SWITCH BOX ASSEMBLY.....		EA		1	*	*	*		*	131	11
				S1655-61335 <78286>	.BOX INSTALLATION-ELECTRICAL.				1						131	
					CARGO SLING CLUTCH SWITCH											
AF	F			S1655-61336 <78286>	..BOX ASSEMBLY,SWITCH.....		EA		1						131	12
					ATTACHING PARTS											
				AN515D832-10 <88044>	..SCREW.....		EA		2						131	
			5310-184-8966	AN960PD8 <88044>	..WASHER,FLAT.....		HD		2	*	*	*		*	131	
			5310-045-3299	MS35338-42 <96906>	..WASHER,LOCK.....				2					*	131	
					---*---											
			5930-655-1514	MS35058-22 <96906>	...SWITCH,TOGGLE.....		EA		1	*	*	*		*	131	14
			5930-655-1516	MS35058-24 <96906>	...SWITCH,TOGGLE.....		EA		1	*	*	*		*	131	
			5930-057-1875	S1655-61334 <78286>	...GUARD.....		EA		1	*	*	*			131	15
					ATTACHING PARTS											
			5305-889-3000	MS35206-230 <96906>	...SCREW,MACHINE.....		HD		2					*	131	16
			5310-188-7721	AN960PD6 <88044>	...WASHER,FLAT.....		HD		2	*	*	*		*	131	
			5310-081-8087	MS21044N06 <96906>	...NUT,SELF-LOCKING,HEXAGON..		EA		2	*	*	*		*	131	
					---*---											
			5930-615-7885	MS25105-21 <96906>	...SWITCH,TOGGLE.....		EA		1	*	*	*		*	131	17
P	O		6210-519-0448	MS25041-6 <96906>	...LIGHT ASSEMBLY.....		EA		2	*	*	*		REF	131	18
P	O		6240-155-7836	MS25237-327 <96906>	...LAMP,INCANDESCENT.....		EA		2	REF	REF	REF	REF	REF	131	19
				S1655-61336-2 <78286>	...PLATE,INSTRUCTION.....		EA		1						131	
				AN991-5-9 <88044>	...GROMMET.....		EA		1						131	
				22A27-22-62 <72962>	...ANCHOR NUT.....		EA		2						131	
					ATTACHING PARTS											
				MS20470AD3 <96906>	...RIVET.....		EA		2						131	
					---*---											
				S1655-61132 <78286>	...BOX-SWITCH.....		EA		1						131	
P	F		5930-639-0662	S1655-61336-1 <78286>	...SWITCH,BOX ASSEMBLY.....		EA		1	*	*	*		REF	131	
				S1655-61114-1 <78286>	.LANDING LIGHT CONTROL BOX...				1						131	25
					INSTALLATION SEE FIG.133											
					FOR BREAKDOWN											
				S1655-61168 <78286>	.SWITCH ASSEMBLY AND.....				1						131	
					INSTALLATION											
			5930-655-1575	MS35059-22 <96906>	..SWITCH,TOGGLE.....		EA		2	*	*	*		*	131	26
P	O		6210-519-2653	MS25010-4A <96906>	..LIGHT,PANEL.....		EA		1	*	REF	REF	REF	REF	131	27
P	O		6240-155-7836	MS25237-327 <96906>	..LAMP,INCANDESCANT.....		EA		1	REF	REF	REF	REF	REF	131	28
P	O		6210-284-0289	MS25041-4 <96906>	..LIGHT,INDICATOR.....		EA		2	*	*	REF		REF	131	29

(1) SOURCE, MAINT AND REC CODE (a) SOURCE CODE	(b) MAINT LEVEL	(c) REC CODE	(2) FEDERAL STOCK NUMBER	REFERENCE NUMBER		(3) DESCRIPTION	MODELS USABLE ON CH-34C	(4) UNIT OF ISSUE	(5) QTY INC IN UNIT PACK	(6) QTY INC IN UNIT	(7) 30-DAY DS/GS MAINT ALW (a) 1-20	(b) 21-50	(c) 51-100	(8) 1-YR ALW PER 100 EQUIP CNTGCY	(9) DEPOT MAINT ALW PER 100 EQUIP	(10) ILLUSTRATION (a) FIG NO	(b) ITEM NO
P	O		6240-155-7836	MS25237-327	<96906>	..LAMP,INCANDESCENT.....		EA		2	REF	REF	REF	REF	REF	131	30
P	F		1560-340-1313	S1655-61169-2	<78286>	..PANEL,PLASTIC.....		EA		1	*	*	*		*	131	31
						ATTACHING PARTS											
			5305-984-6195	MS35206-247	<96906>	..SCREW,MACHINE.....				2					*	131	32
			5310-184-8966	AN960PD8	<88044>	..WASHER,FLAT.....		HD		2	*	*	*		*	131	
						---*---											
				S1655-61414	<78286>	.PANEL INSTALLATION-CREW.....				1						131	
AF	F			S1655-61414-1	<78286>	..PANEL ASSEMBLY-CREW.....		EA		1						131	33
						ATTACHING PARTS											
			5305-855-6303	AN526DD632R6	<88044>	..SCREW,MACHINE.....		EA		4	*	*	*		*	131	34
			5310-188-7721	AN960PD6	<88044>	..WASHER,FLAT.....		HD		4	*	*	*		*	131	
			5310-081-8087	MS21044N06	<96906>	..NUT,SELF-LOCKING,HEXAGON...		EA		4	*	*	*		*	131	
						---*---											
			5930-655-1513	AN3021-1	<88044>	...SWITCH,TOGGLE.....		EA		1	*	*	*		*	131	35
			5930-655-1514	MS35058-22	<96906>	...SWITCH,TOGGLE.....		EA		1	*	*	*		*	131	36
				S1655-61148	<78286>	.PANEL INSTALLATION-CREW.....				1						131	
				S1655-61149	<78286>	..PANEL ASSEMBLY-CREW.....		EA		1						131	37
						ATTACHING PARTS											
			5305-855-6303	AN526DD632R6	<88044>	..SCREW,MACHINE.....		EA		4	*	*	*		*	131	38
			5310-188-7721	AN960PD6	<88044>	..WASHER.....		HD		4	*	*	*		*	131	
			5310-631-1300	MS20364D632A	<96906>	..NUT,SELF-LOCKING,HEXAGON...		HD		4	*	*	*		*	131	
						---*---											
			5930-655-1518	MS35058-27	<96906>	...SWITCH,TOGGLE.....		EA		1	*	*	*		*	131	39
			5930-615-7880	MS35059-26	<96906>	...SWITCH,TOGGLE.....		EA		1	*	*	*		*	131	40
			5930-617-9718	MS25224-3	<96906>	...GUARD,SWITCH.....		EA		1	*	*	*		*	131	41
P	F		1560-639-0600	S1655-61149-3	<78286>	...PANEL,RESCUE HOIST SWITCH.		EA		1	*	*	*		*	131	42
			5930-556-2492	BL1531	<08484>	...SWITCH,SENSITIVE.....										131	
						RPL-BY 5930-636-4345											
P	F		5930-636-4345	MS25011-1	<96906>	.SWITCH,SENSITIVE RPLS--....		EA		2	*	*	*		*	131	42A
						5930-556-2492											
				S1655-61103	<78286>	.LIGHT INSTALLATION-DOME.....				1						131	
AO	O			S1655-61104	<78286>	..LIGHT ASSEMBLY-DOME.....		EA		1						131	43
						ATTACHING PARTS											
			5305-984-6201	MS35206-253	<96906>	..SCREW,MACHINE.....				4					*	131	44
			5310-184-8966	AN960PD8	<88044>	..WASHER,FLAT.....		HD		4	*	*	*		*	131	
			5340-826-5863	NAS42DD6-68	<80205>	..SPACER.....		EA		4	*	*	*		*	131	45
						---*---											
P	O		6220-299-7136	MS25358-1	<96906>	...LIGHT,DOME RPLS--.....		EA		1	REF	REF	REF		REF	131	46
						6220-299-7431,											
						6220-512-6648,											
						6220-836-1696,&											
						6620-875-6579											
						ATTACHING PARTS											
			5305-889-3000	MS35206-230	<96906>	...SCREW,MACHINE.....		HD		4	*	*	*		*	131	47
			5310-187-2398	AN960PD6L	<88044>	...WASHER,FLAT.....		HD		4	*	*	*		*	131	
						---*---											
P	O		6220-283-9732	57A3A011	<80064>	....LENS,DOME LIGHT.....		EA		1	*	*	*		REF	131	
P	O		6240-155-7784	MS25232-307	<96906>	...LAMP,INCANDESCENT.....		EA		1	*	*	*		REF	131	48
P	O		6240-155-7932	MS25235R311	<96906>	...LAMP,INCANDESCENT.....		EA		1	*	*	*		REF	131	49
MF	F			S1655-61105-2	<78286>	...PLATE ASSEMBLY.....		EA		1						131	50
						MAKEFR											
						AR 9535-167-2280 AL ALLY SH											

(1) SOURCE, MAINT AND REC CODE (a) SOURCE CODE	(b) MAINT CODE	(c) REC CODE	(2) FEDERAL STOCK NUMBER	REFERENCE NUMBER		(3) DESCRIPTION	MODELS USABLE ON CH-34C	(4) UNIT OF ISSUE	(5) QTY INC IN UNIT PACK	(6) QTY INC IN UNIT	(7) 30-DAY DS/GS MAINT ALW (a) 1-20	(b) 21-50	(c) 51-100	(8) 1-YR ALW PER 100 EQUIP CNTGCY	(9) DEPOT MAINT ALW PER 100 EQUIP	(10) ILLUSTRATION (a) FIG NO	(b) ITEM NO
			5310-272-7041	AN366DF632A	<88044>	....NUT,SELF-LOCKING,PLATE...		EA		4	*	*	*		*	131	51
						ATTACHING PARTS											
				MS20426D3	<96906>	....RIVET.....		EA		2						131	
						---*---											
				S1655-61105-4	<78286>	....PLATE.....		EA		1						131	
				S1655-61112	<78286>	.COVER INSTALLATION.....				1						131	
P	F		1560-691-4469	S1655-61105-1	<78286>	..COVER ASSEMBLY,CABIN DOOR..		EA		1	*	*	*		*	131	54
						ATTACHING PARTS											
			5305-286-1772	AN525-832R14	<88044>	..SCREW,MACHINE.....		EA		4	*	*	*		*	131	55
			5310-184-8966	AN960PD8	<88044>	..WASHER,FLAT.....		HD		4	*	*	*		*	131	
						---*---											
P	F		1560-551-2096	S1655-61105-3	<78286>	..GASKET		EA		1	*	*	*		*	131	56
MF	F			S1655-61146	<78286>	.BUS BAR.....		EA		1						131	
						ATTACHING PARTS											
				AN515UB616-16	<88044>	.SCREW.....		EA		1						131	
			5310-187-2413	AN961-616	<88044>	.WASHER,FLAT.....		HD		2	*	*	*		*	131	
			5310-184-8971	AN935B616	<88044>	.WASHER,FLAT.....		EA		1	*	*	*		*	131	
			5310-222-0671	MS20341-616	<96906>	.NUT,PLAIN,HEXAGON.....		HD		1	*	*	*		*	131	
						---*---											
P	F		6625-166-1005	MS91587-4	<96906>	.SHUNT,INSTRUMENT.....		EA		1	*	*	*		*	131	58
						ATTACHING PARTS											
				AN520DD10-12	<88044>	.SCREW.....		EA		2						131	
						---*---											
				S1655-61432	<78286>	.LIGHT INSTALLATION-SPOT.....				1						131	
P	O		6220-988-5310	MS17245-1	<96906>	..LIGHT,COCKPIT,AIRCRAFT.....		EA		AR	*	REF	REF		REF	131	59
						ATTACHING PARTS											
			5305-889-3000	AN526-632R8	<88044>	..SCREW,MACHINE.....		HD		2					*	131	
			5310-188-7721	AN960PD6	<88044>	..WASHER,FLAT.....		HD		2	*	*	*		*	131	
			5310-081-8087	MS21044N06	<96906>	..NUT,SELF-LOCKING,HEXAGON...		EA		2	*	*	*		*	131	
						---*---											
MF	O			397-1	<94640>	.COVER,TERMINAL BOARD.....		EA		1						131	60
						MAKEFR											
						AR 5940-642-1381 TERM BOARD											
MF	O			AN3436-2-1	<88044>	.TERMINAL,BOARD.....		EA		1						131	
						MAKEFR											
						AR 5940-950-1610 TERM BOARD											
				AN515-4-11	<88044>	.SCREW.....		EA		2						131	
			5310-550-5009	MS15795-704	<96906>	.WASHER,FLAT.....		HD		2					*	131	
			5310-088-0551	MS21044N04	<96906>	.NUT,SELF-LOCKING,HEXAGON....		EA		2	*	*	*		*	131	
P	F		5940-825-7865	397-5	<94640>	.COVER,TERMINAL BOARD.....		EA		1	*	*	*		*	131	61
				AN3436-2-5	<88044>	.TERMINAL BOARD.....		EA		1						131	
						ATTACHING PARTS											
			5305-889-2999	MS35206-217	<96906>	.SCREW,MACHINE.....		HD		2	*	*	*		*	131	
			5310-187-2408	AN960PD4	<88044>	.WASHER,FLAT.....		HD		2					*	131	
			5310-088-0551	MS21044N04	<96906>	.NUT,SELF-LOCKING,HEXAGON....		EA		2	*	*	*		*	131	
						---*---											
MF	O			MS18029-186	<96906>	.COVER,TERMINAL BOARD.....		EA		1						131	62
						MAKEFR											
						AR 5940-943-0786 TERM BOARD											
			5940-950-1610	MS27212-1-20	<96906>	.TERMINAL BOARD.....		EA		1	*	*	*			131	
						ATTACHING PARTS											

(1) SOURCE, MAINT AND REC CODE (a) SOURCE CODE	(b) MAINT LEVEL	(c) REC CODE	(2) FEDERAL STOCK NUMBER	REFERENCE NUMBER		(3) DESCRIPTION	MODELS USABLE ON CH-34C	(4) UNIT OF ISSUE	(5) QTY INC IN UNIT PACK	(6) QTY INC IN UNIT	(7) 30-DAY DS GS MAINT ALW (a) 1-20	(b) 21-50	(c) 51-100	(8) 1-YR ALW PER 100 EQUIP CNTGCY	(9) DEPOT MAINT ALW PER 100 EQUIP	(10) ILLUSTRATION (a) FIG NO	(b) ITEM NO
			5305-889-2999	MS35206-217	<96906>	.SCREW,MACHINE.....		HD		2					*	131	
			5310-550-5009	MS15795-704	<96906>	.WASHER,FLAT.....		HD		2					*	131	
			5310-088-0551	MS21044N04	<96906>	.NUT,SELF-LOCKING,HEXAGON....		EA		2	*	*	*		*	131	
						---*---											
MF	O			397-1	<94640>	.COVER,TERMINAL BOARD.....		EA		1						131	63
						MAKEFR											
						AR 5940-945-0786 TERM BOARD											
				MS25123-2-1	<96906>	.TERMINAL BLOCK ASSEMBLY.....		EA		1						131	
						ATTACHING PARTS											
			5305-889-2999	MS35206-217	<96906>	.SCREW,MACHINE.....		HD		2	*	*	*		*	131	
			5310-550-5009	MS15795-704	<96906>	.WASHER,FLAT.....		HD		2					*	131	
			5310-088-0551	MS21044N04	<96906>	.NUT,SELF-LOCKING,HEXAGON....		EA		2	*	*	*		*	131	
						---*---											
MF	O			397-2	<94640>	.COVER,TERMINAL BOARD.....		EA		1						131	64
						MAKEFR											
						AR 5940-907-5939 TERM BOARD											
MF	O			AN3436-2-2	<88044>	.TERMINAL BOARD.....		EA		1						131	
						MAKEFR											
						AR 5940-950-1610 TERM BOARD											
						ATTACHING PARTS											
			5305-889-2999	MS35206-217	<96906>	.SCREW,MACHINE.....		HD		2	*	*	*		*	131	
			5310-550-5009	MS15795-704	<96906>	.WASHER,FLAT.....		HD		2					*	131	
			5310-088-0551	MS21044N04	<96906>	.NUT,SELF-LOCKING,HEXAGON....		EA		2	*	*	*		*	131	
						---*---											
P	F		6220-295-0897	MS25027-1	<96906>	.LIGHT,PANEL.....		EA		1					REF	131	65
P	O		6240-155-8714	MS25231-313	<96906>	.LAMP,INCANDESCENT.....		EA		1	REF	REF	REF		REF	131	
				S1655-61138-1	<78286>	.FEED-THRU ASSEMBLY.....		EA		1						131	
						ATTACHING PARTS											
				AN526-632R8	<88044>	.SCREW,MACHINE.....		HD		6					*	131	
			5310-188-7721	AN960PD6	<88044>	.WASHER,FLAT.....		HD		6	*	*	*		*	131	
			5310-905-8451	MS21083N06	<96906>	.NUT,SELF-LOCKING,HEXAGON....		HD		6	*	*	*		*	131	
						---*---											
			5310-194-0634	AN961-6	<88044>	..WASHER,FLAT.....		HD		16	*	*	*		*	131	68
			5310-184-8977	MS35338-98	<96906>	..WASHER,LOCK.....		EA		16					*	131	69
			5310-262-5076	MS20341-6B	<96906>	..NUT,PLAIN,HEXAGON.....		HD		16					*	131	70
				S1655-61138-3	<78286>	..STUD.....		EA		4						131	
				S1655-61138-2	<78286>	..INSULATOR.....		EA		1						131	
				S1655-61139-1	<78286>	.FEED-THRU ASSEMBLY.....		EA		1						131	
						ATTACHING PARTS											
				AN526-632R8	<88044>	.SCREW,MACHINE.....		HD		4					*	131	
			5310-188-7721	AN960PD6	<88044>	.WASHER,FLAT.....		HD		4	*	*	*		*	131	
			5310-905-8451	MS21083N06	<96906>	.NUT,SELF-LOCKING,HEXAGON....		HD		4	*	*	*		*	131	
						---*---											
			5310-184-8977	MS35338-98	<96906>	..WASHER,LOCK.....		EA		4	*	*	*		*	131	75
			5310-194-0634	AN961-6	<88044>	..WASHER,FLAT.....		HD		4	*	*	*		*	131	76
			5310-262-5076	MS20341-6B	<96906>	..NUT,PLAIN,HEXAGON.....		HD		4	*	*	*		*	131	77
				S1655-61139-3	<78286>	..STUD.....		EA		1						131	
				S1655-61139-2	<78286>	..INSULATOR.....		EA		1						131	
				S1655-61138-4	<78286>	.FEED-THRU ASSEMBLY.....		EA		1						131	
						ATTACHING PARTS											
				AN526-632R8	<88044>	.SCREW,MACHINE.....		HD		4					*	131	
			5310-188-7721	AN960PD6	<88044>	.WASHER,FLAT.....		HD		4	*	*	*		*	131	

(1) SOURCE, MAINT AND REC CODE (a) SOURCE CODE	(b) MAINT LEVEL	(c) REC CODE	(2) FEDERAL STOCK NUMBER	REFERENCE NUMBER		(3) DESCRIPTION	MODELS USABLE ON CH-34C	(4) UNIT OF ISSUE	(5) QTY INC IN UNIT PACK	(6) QTY INC IN UNIT	(7) 30-DAY DS GS MAINT ALW (a) 1-20	(b) 21-50	(c) 51-100	(8) 1-YR ALW PER 100 EQUIP CNTGCY	(9) DEPOT MAINT ALW PER 100 EQUIP	(10) ILLUSTRATION (a) FIG NO	(b) ITEM NO
			5310-905-8451	MS21083N06	<96906>	.NUT,SELF-LOCKING,HEXAGON....		HD		4	*	*	*		*	131	
						---*---											
			5310-187-2413	AN961-616	<88044>	..WASHER.....		HD		4	*	*	*		*	131	82
			5310-576-0548	AN935B616L	<88044>	..WASHER,LOCK.....		HD		2	*	*	*		*	131	83
				S1655-61138-7	<78286>	..NUT.....		EA		4						131	
P	F		5307-639-0650	S1655-61138-6	<78286>	..STUD,PLAIN.....		EA		1	*	*	*		*	131	85
				S1655-61138-5	<78286>	..INSULATOR.....		EA		1						131	
MF	O			MS18029-1S6	<96906>	.COVER,TERMINAL BOARD.....		EA		1						131	87
						MAKEFR											
						AR 5940-907-5939 NUT											
MF	F			AN3436-2-3	<88044>	.TERMINAL BOARD ASSEMBLY.....		EA		1						131	
						MAKEFR											
						AR 5940-950-1610 TERM BOARD											
						ATTACHING PARTS											
			5305-889-2999	MS35206-217	<96906>	.SCREW,MACHINE.....		HD		2					*	131	
			5310-550-5009	MS15795-704	<96906>	.WASHER,FLAT.....		HD		2					*	131	
			5310-088-0551	MS21044N04	<96906>	.NUT,SELF-LOCKING,HEXAGON....		EA		2	*	*	*		*	131	
						---*---											
				S1655-61661-1	<78286>	.CABLE ASSEMBLY,WIRING.....		EA		1						131	
			5935-583-2172	MS3100K28-21P	<96906>	...CONNECTOR,RECEPTACLE,.....		EA		AR	*	*	*		*	131	
						ELECTRIC											
				MS3100K24-7P	<96906>	...ADAPTER,CONNECTOR,.....		EA		AR						131	
						ELECTRIC											
			5935-651-1607	MS3100K24-28P	<96906>	...CONNECTOR,RECEPTACLE,.....		EA		AR	*	*	*		*	131	
						ELECTRIC											
MF	F			S1655-61668-1	<78286>	.CABLE ASSEMBLY,FUEL SYSTEM..		EA		1						131	
						MAKEFR											
						2 EA 5935-583-5970 CONNECTOR											
						AR 6145-504-0362 WIRE											
				S1655-61663	<78286>	.BRACKET.....		EA		1						131	89
						ATTACHING PARTS											
				MS20470AD4	<96906>	.RIVET.....		EA		4						131	
						---*---											
MF	O			MS18029-1S4	<96906>	.TERMINAL.....		EA		1						131	91
						MAKEFR											
						AR 5940-907-5939 TERM BOARD											
				AN3436-24	<88044>	.TERMINAL BLOCK ASSEMBLY.....		EA		1						131	
						ATTACHING PARTS											
			5305-889-2999	MS35206-217	<96906>	.SCREW,MACHINE.....		HD		2	*	*	*		*	131	
			5310-550-5009	MS15795-704	<96906>	.WASHER,FLAT.....		HD		2					*	131	
			5310-088-0551	MS21044N04	<96906>	.NUT,SELF-LOCKING,HEXAGON....		EA		2	*	*	*		*	131	
						---*---											
MF	O			397-2	<94640>	.COVER,TERMINAL BOARD.....		EA		1						131	92
						MAKEFR											
						AR 5940-907-5939 TERM BOARD											
MF	O			AN3436-2-2	<88044>	.TERMINAL BOARD.....		EA		1						131	
						MAKEFR											
						AR 5940-950-1610 TERM BOARD											
						ATTACHING PARTS											
			5305-889-2999	MS35206-217	<96906>	.SCREW,MACHINE.....		HD		2	*	*	*		*	131	
			5310-550-5009	MS15795-704	<96906>	.WASHER,FLAT.....		HD		2					*	131	
			5310-088-0551	MS21044N04	<96906>	.NUT,SELF-LOCKING,HEXAGON....		EA		2	*	*	*		*	131	

(1) SOURCE, MAINT AND REC CODE (a) SOURCE CODE	(b) MAINT LEVEL	(c) REC CODE	(2) FEDERAL STOCK NUMBER	REFERENCE NUMBER	(3) DESCRIPTION	MODELS USABLE ON CH-34C	(4) UNIT OF ISSUE	(5) QTY INC IN UNIT PACK	(6) QTY INC IN UNIT	(7) 30-DAY DS GS MAINT ALW (a) 1-20	(b) 21-50	(c) 51-100	(8) 1-YR ALWPER 100 EQUIP CNTGCY	(9) DEPOT MAINT ALWPER 100 EQUIP	(10) ILLUSTRATION (a) FIG NO	(b) ITEM NO
					CONTINUED										131	
					---*---											
				S1655-61128 <78286>	.FUSELAGE AND POSITION..... LIGHTS INSTALLATION SEE FIG.134 FOR BREAKDOWN				1						131	93
				S1655-61434 <78286>	.BELL INSTALLATION-ALARM.....				1						131	
P	O		6350-653-5729	80364 <19975>	..BELL,ELECTRICAL..... ATTACHING PARTS		EA		1	*	*	*		*	131	94
			5305-984-6194	MS35206-315 <96906>	..SCREW,MACHINE.....		HD		3					*	131	
			5310-184-8966	AN960PD8 <88044>	..WASHER,FLAT.....		HD		3	*	*	*		*	131	
			5310-811-3494	MS21044N08 <96906>	..NUT,SELF-LOCKING,HEXAGON...		EA		3	*	*	*		*	131	
					---*---											
P	F		6210-635-4700	MS25041-8 <96906>	.LIGHT,INDICATOR.....		EA		1	4	9	19		*	131	
				S1665-61900 <78286>	CABIN EQUIPMENT AND WIRING... INSTALLATION USBL EFF 56-4313 AND SUBSEQUENT SEE FIG.128 FOR NHA										132	
				MS18029-1S7 <96906>	.COVER,TERMINAL BOARD.....		EA		2						132	1
MF	F			AN3436-2-7 <88044>	.TERMINAL BOARD..... MAKEFR		EA		2						132	
					1 EA 5940-950-1610 TERM BOARD											
			5305-889-2999	MS35206-217 <96906>	.SCREW,MACHINE.....		HD		2	*	*	*		*	132	
			5310-550-5009	MS15795-704 <96906>	.WASHER,FLAT.....		HD		2					*	132	
			5310-088-0551	MS21044N04 <96906>	.NUT,SELF-LOCKING,HEXAGON....		EA		2	*	*	*		*	132	
					---*---											
				S1620-61287 <78286>	.CLIP..... ATTACHING PARTS		EA		2						132	2
				MS20470AD3 <96906>	.RIVET.....		EA		2						132	
					---*---											
MF	O			MS18029-1S6 <96906>	.COVER,TERMINAL BOARD..... MAKEFR		EA		1						132	4
					AR 5940-943-0786 TERM BOARD											
			5940-950-1610	MS27212-1-20 <96906>	.TERMINAL BOARD..... ATTACHING PARTS		EA		1						132	
			5305-889-2999	MS35206-217 <96906>	.SCREW,MACHINE.....		HD		2	*	*	*		*	132	
			5310-550-5009	MS15795-704 <96906>	.WASHER,FLAT.....		HD		2					*	132	
			5310-088-0551	MS21044N04 <96906>	.NUT,SELF-LOCKING,HEXAGON....		EA		2	*	*	*		*	132	
					---*---											
MF	O			MS18029-1S18 <96906>	.COVER,TERMINAL BOARD..... MAKEFR		EA		2						132	
					AR 5940-642-1381 TERM BOARD											
P	O		5940-082-4642	MS18029-11S20 <96906>	.COVER,TERMINAL BOARD.....		EA		1	*	*	*		*	132	5
P	F		5940-950-1610	MS25123-1-20 <96906>	.TERMINAL BOARD..... ATTACHING PARTS		EA		1	*	*	*		*	132	6
			5305-889-2999	MS35206-217 <96906>	.SCREW,MACHINE.....		HD		3	*	*	*		*	132	7
			5310-550-5009	MS15795-704 <96906>	.WASHER,FLAT.....		HD		3					*	132	

(1) SOURCE, MAINT AND REC CODE (a) SOURCE CODE	(b) MAINT CODE	(c) REC CODE	(2) FEDERAL STOCK NUMBER	REFERENCE NUMBER	(3) DESCRIPTION	MODELS USABLE ON CH-34C	(4) UNIT OF ISSUE	(5) QTY INC IN UNIT PACK	(6) QTY INC IN UNIT	(7) 30-DAY DS/GS MAINT ALW (a) 1-20	(b) 21-50	(c) 51-100	(8) 1-YR ALW PER 100 EQUIP CNTGCY	(9) DEPOT MAINT ALW PER 100 EQUIP	(10) ILLUSTRATION (a) FIG NO	(b) ITEM NO
			5310-088-0551	MS21044N04	<96906> .NUT,SELF-LOCKING,HEXAGON....		EA		3	*	*	*		*	132	
					---*---											
MF	O			MS18029-1S4	<96906> .TERMINAL.....		EA		1						132	8
					MAKEFR											
					AR 5940-907-5939											
P	F		5940-950-1610	MS25123-1-20	<96906> .TERMINAL BOARD.....		EA		1	*	*	*		REF	132	
					ATTACHING PARTS											
			5305-889-2999	MS35206-217	<96906> .SCREW,MACHINE.....		HD		2	*	*	*		*	132	
			5310-550-5009	MS15795-704	<96906> .WASHER,FLAT.....		HD		2					*	132	
			5310-088-0551	MS21044N04	<96906> .NUT,SELF-LOCKING,HEXAGON....		EA		2	*	*	*		*	132	
					---*---											
				S1655-61663	<78286> .BRACKET.....		EA		1						132	
					ATTACHING PARTS											
				MS20470AD4	<96906> .RIVET.....		EA		4						132	
					---*---											
MF	O			MS18029-1S6	<96906> .COVER,TERMINAL BOARD.....		EA		1						132	11
					MAKEFR											
					AR 5940-642-1381 TERM BOARD											
			5940-950-1690	MS27212-1-20	<96906> .TERMINAL BOARD.....		EA		1						132	
					ATTACHING PARTS											
			5305-889-2999	MS35206-217	<96906> .SCREW,MACHINE.....		HD		2	*	*	*		*	132	
			5310-550-5009	MS15795-704	<96906> .WASHER,FLAT.....		HD		2					*	132	
			5310-088-0551	MS21044N04	<96906> .NUT,SELF-LOCKING,HEXAGON....		EA		2	*	*	*		*	132	
					---*---											
				S1655-61168	<78286> .SWITCH ASSEMBLY AND.....				1						132	
					INSTALLATION,FUEL TRANSFER PUMP											
			5930-655-1575	MS35059-22	<96906> ..SWITCH,TOGGLE.....		EA		2	*	*	*		*	132	12
P	O		6210-519-2653	MS25010-4A	<96906> ..LIGHT,PANEL.....		EA		1	*	REF	REF	REF	REF	132	13
P	O		6240-155-7836	MS25237-327	<96906> ..LAMP,INCANDESCENT.....		EA		1	REF	REF	REF	REF	REF	132	14
P	O		6210-284-0289	MS25041-4	<96906> ..LIGHT,INDICATOR.....		EA		2	*	*	REF		REF	132	15
P	O		6240-155-7836	MS25237-327	<96906> ..LAMP,INCANDESCENT.....		EA		2	REF	REF	REF	REF	REF	132	16
P	F		1560-340-1313	S1655-61169-2	<78286> ..PANEL,PLASTIC.....		EA		1	*	*	*		REF	132	17
				S1655-61335	<78286> .BOX INSTALLATION,CARGO.....				1						132	
					SLING AND CLUTCH SWITCH											
AF	F			S1655-61336	<78286> ..BOX ASSEMBLY,SWITCH.....		EA		1						132	18
					ATTACHING PARTS											
			5305-639-4812	AN525D832R10	<88044> ..SCREW,MACHINE.....		EA		2	*	*	*		*	132	19
			5310-184-8966	AN960PD8	<88044> ..WASHER,FLAT.....		HD		2	*	*	*		*	132	
			5310-045-3299	MS35338-42	<96906> ..WASHER,LOCK.....		HD		2	*	*	*		*	132	
					---*---											
			5930-655-1514	MS35058-22	<96906> ...SWITCH,TOGGLE.....		EA		1	*	*	*		*	132	20
P	O		6210-519-0448	MS25041-6	<96906> ...LIGHT ASSEMBLY.....		EA		2	*	*	*		REF	132	21
P	O		6240-155-7836	MS25237-327	<96906> ...LAMP,INCANDESCENT.....		EA		2	REF	REF	REF	REF	REF	132	22
P	O		5930-057-1875	S1655-61334	<78286> ...GUARD.....		EA		1	*	*	*			132	23
			5930-615-7885	MS25105-21	<96906> ...SWITCH,TOGGLE.....		EA		1	*	*	*		*	132	24
					ATTACHING PARTS											
			5305-889-3000	MS35206-230	<96906> ...SCREW,MACHINE.....		HD		2	*	*	*		*	132	25
			5310-188-7721	AN960PD6	<88044> ...WASHER,FLAT.....		HD		2	*	*	*		*	132	
			5310-081-8087	MS21044N06	<96906> ...NUT,SELF-LOCKING,HEXAGON..		EA		2	*	*	*		*	132	
					---*---											
				S1655-61336-2	<78286> ...PLATE,INSTRUCTION.....		EA		1						132	26

(1) SOURCE, MAINT AND REC CODE (a) SOURCE CODE	(b) MAINT LEVEL	(c) REC CODE	(2) FEDERAL STOCK NUMBER	REFERENCE NUMBER		(3) DESCRIPTION	MODELS USABLE ON CH-34C	(4) UNIT OF ISSUE	(5) QTY INC IN UNIT PACK	(6) QTY INC IN UNIT	(7) 30-DAY DS GS MAINT ALW (a) 1-20	(b) 21-50	(c) 51-100	(8) 1-YR ALW PER 100 EQUIP CNTGCY	(9) DEPOT MAINT ALW PER 100 EQUIP	(10) ILLUSTRATION (a) FIG NO	(b) ITEM NO
P	F		5930-639-0662	S1655-61336-1	<78286>	...SWITCH BOX ASSEMBLY.....		EA		1	*	*	*		REF	132	27
				S1655-61114-1	<78286>	.LANDING LIGHT CONTROL BOX... INSTALLATION SEE FIG.133 FOR BREAKDOWN				1						132	28
				S1655-61164	<78286>	.SWITCH INSTALLATION,ENGINE.. PRIMER				1						132	
P	O		5930-258-4624	C1002	<81640>	..SWITCH,PUSH.....		EA		1	*	*	*		REF	132	29
P	F		2925-613-9685	S1655-61165	<78286>	..NAMEPLATE,ENGINE PRIMER....		EA		1	*	REF	REF		REF	132	30
MF	O			397-1	<94640>	.COVER,TERMINAL BOARD..... MAKEFR		EA		1						132	31
						AR 5940-642-1381 TERM BOARD											
MF	O			AN3436-2-1	<88044>	.TERMINAL BOARD..... MAKEFR		EA		1						132	
						AR 5940-950-1610 TERM BOARD											
						ATTACHING PARTS											
			5305-889-2999	MS35206-217	<96906>	.SCREW,MACHINE.....		HD		2	*	*	*		*	132	
			5310-550-5009	MS15795-704	<96906 >	.WASHER,FLAT.....		HD		2					*	132	
			5310-088-0551	MS21044N04	<96906>	.NUT,SELF-LOCKING,HEXAGON....		EA		2	*	*	*		*	132	
						---*---											
MF	O			397-1	<94640>	.COVER,TERMINAL BOARD..... MAKEFR		EA		1						132	32
						AR 5940-642-1381 TERM BOARD											
MF	O			AN3436-2-1	<88044>	.TERMINAL BOARD..... MAKEFR		EA		1						132	
						AR 5940-950-1610 TERM BOARD											
						ATTACHING PARTS											
			5305-889-2999	MS35206-217	<96906>	.SCREW,MACHINE.....		HD		2	*	*	*		*	132	
			5310-550-5009	MS15795-704	<96906 >	.WASHER,FLAT.....		HD		2					*	132	
			5310-088-0551	MS21044N04	<96906>	.NUT,SELF-LOCKING,HEXAGON....		EA		2	*	*	*		*	132	
						---*---											
				S1655-61713	<78286>	.RECEPTACLE INSTALLATION-.... EXTERNAL DC POWER				1						132	
				S1655-66117-5	<78286>	..BUS BAR..... ATTACHING PARTS		EA		1						132	
			5306-655-9964	AN6DDH10	<88044>	..BOLT,MACHINE.....		EA		1	*	*	*		*	132	
			5310-187-2400	AN960PD616	<88044>	..WASHER,FLAT.....		HD		2	*	*	*		*	132	
			5310-857-4957	MS21044D6	<96906>	..NUT,SELF-LOCKING,HEXAGON...		EA		1	*	*	*		*	132	
						---*---											
MF	O			MS18029-1S4	< 96906 >	.TERMINAL..... MAKEFR		EA		1						132	35
						AR 5940-907-5939 TERM BOARD											
P	F		5940-950-1610	MS25123-1-20	<96906>	.TERMINAL BOARD..... ATTACHING PARTS		EA		1	*	*	*		REF	132	
			5305-889-2999	MS35206-217	< 96906>	.SCREW,MACHINE.....		HD		2					*	132	
			5310-550-5009	MS15795-704	< 96906 >	.WASHER,FLAT.....		HD		2					*	132	
			5310-088-0551	MS21044N04	<96906>	.NUT,SELF-LOCKING,HEXAGON....		EA		2	*	*	*		*	132	
						---*---											
MF	F		6620-613-9938	S1655-61668-1	<78286>	.CABLE ASSEMBLY,FUEL SYSTEM.. MAKEFR		EA		1	*	*	*			132	36
						AR 5935-501-5807 PLUG											
						AR 6145-504-0362 CABLE											
MF	O			397-12	<94640>	.COVER,TERMINAL BOARD.....		EA		1						132	37

(1) SOURCE, MAINT AND REC CODE (a) SOURCE CODE	(b) MAINT LEVEL	(c) REC CODE	(2) FEDERAL STOCK NUMBER	REFERENCE NUMBER	(3) DESCRIPTION	MODELS USABLE ON CH-34C	(4) UNIT OF ISSUE	(5) QTY INC IN UNIT PACK	(6) QTY INC IN UNIT	(7) 30-DAY DS/GS MAINT ALW (a) 1-20	(b) 21-50	(c) 51-100	(8) 1-YR ALW PER 100 EQUIP CNTGCY	(9) DEPOT MAINT ALW PER 100 EQUIP	(10) ILLUSTRATION (a) FIG NO	(b) ITEM NO
					CONTINUED										132	37
					MAKEFR											
					AR 5940-642-1381 TERM BOARD											
				AN3436-2-12 <88044>	.TERMINAL BOARD.....		EA		1						132	
					ATTACHING PARTS											
			5305-889-2999	MS35206-217 <96906>	.SCREW,MACHINE.....		HD		2	*	*	*		*	132	
			5310-550-5009	MS15795-704 <96906>	.WASHER,FLAT.....		HD		2					*	132	
			5310-088-0551	MS21044N04 <96906>	.NUT,SELF-LOCKING,HEXAGON....		EA		2	*	*	*		*	132	
					---*---											
				S1655-61924 <78286>	.SHIELD INSTALLATION,CABLE...				1						132	
					HARNESS											
P	O		2925-624-8184	S1655-61924-3 <78286>	..SHIELD ASSEMBLY,.....		EA		1	*	*	*		*	132	38
					ELECTRICAL-LH											
P	O		1560-632-4432	S1655-61924-5 <78286>	..SHIELD ASSEMBLY-RH.....		EA		1	*	*	*		*	132	
					ATTACHING PARTS											
			5305-631-4496	AN525D10R16 <88044>	..SCREW,MACHINE.....		EA		1					*	132	39
			5310-183-4406	AN960PD10 <88044>	..WASHER,FLAT.....		HD		1	*	*	*		*	132	
P	O		5310-560-5569	A10K75 <25472>	..NUT,BLIND RIVET.....		EA		1	*	*	*		*	132	
			5305-849-8055	AN525D10R12 <88044>	..SCREW,MACHINE.....		EA		2	*	*	*		*	132	
			5310-183-4406	AN960PD10 <88044>	..WASHER,FLAT.....		HD		2	*	*	*		*	132	40
			5310-877-5798	MS21044D3 <96906>	..NUT,SELF-LOCKING,HEXAGON...		EA		2	*	*	*		*	132	
					---*---											
			5340-682-4624	NAS43DD3-28 <80205>	..SPACER.....		EA		2	*	*	*		*	132	41
			5340-682-4624	NAS43DD3-28 <80205>	..SPACER.....		EA		1	*	*	*		*	132	42
X2	F			S1655-61144 <78286>	.CONNECTOR AND CAP ASSEMBLY..		EA		2						132	
P	F		1650-630-3665	S1655-61145-2 <78286>	..GASKET.....		EA		1	*	2	2			132	43
			5975-240-2646	AN3066-16 <88044>	..LOCKNUT,ELECTRICAL.....		EA		1	*	*	*		*	132	44
				S1655-61145-1 <78286>	..GASKET.....		EA		1						132	
				S1655-61144-2 <78286>	..CONNECTOR,BOX.....		EA		1						132	46
				S1655-61414 <78286>	.PANEL INSTALLATION,CABIN....				1						132	
					AND FLOOD LIGHT SWITCH											
					CREW											
AF	F			S1655-61414-1 <78286>	..PANEL ASSEMBLY,CREW.....		EA		1						132	47
					ATTACHING PARTS											
			5305-855-6303	AN526DD632R6 <88044>	..SCREW,MACHINE.....		EA		4	*	*	*		*	132	48
			5310-188-7721	AN960PD6 <88044>	..WASHER,FLAT.....		HD		4	*	*	*		*	132	
			5310-631-1300	MS20364D632A <96906>	..NUT,SELF-LOCKING,HEXAGON...		HD		4	*	*	*		*	132	
					---*---											
			5930-655-1513	AN3021-1 <88044>	...SWITCH,TOGGLE.....		EA		1	*	*	*		*	132	49
			5930-655-1514	MS35058-22 <96906>	...SWITCH,TOGGLE.....		EA		1	*	*	*		*	132	50
				S1655-61148-2 <78286>	.PANEL INSTALLATION,RESCUE...				1						132	
					HOIST SWITCH CREW											
AF	F			S1655-61149-4 <78286>	..PANEL ASSEMBLY.....		EA		1						132	52
					ATTACHING PARTS											
			5305-855-6303	AN526DD632R6 <88044>	..SCREW,MACHINE.....		EA		2	*	*	*		*	132	53
			5310-188-7721	AN960PD6 <88044>	..WASHER,FLAT.....		HD		2	*	*	*		*	132	
			5305-855-6303	AN526DD632R6 <88044>	..SCREW,MACHINE.....		EA		2	*	*	*		*	132	54
			5310-188-7721	AN960PD6 <88044>	..WASHER,FLAT.....		HD		4	*	*	*		*	132	
			5310-631-1300	MS20364D632A <96906>	..NUT,SELF-LOCKING,HEXAGON...		HD		2	*	*	*		*	132	
					---*---											
			5930-617-9718	MS25224-3 <96906>	...GUARD		EA		1	*	*	*		*	132	55
			5930-615-7880	MS35059-26 <96906>	...SWITCH,TOGGLE.....		EA		1	*	*	*		*	132	56

(1) SOURCE, MAINT AND REC CODE (a) SOURCE CODE	(b) MAINT LEVEL	(c) REC CODE	(2) FEDERAL STOCK NUMBER	REFERENCE NUMBER		(3) DESCRIPTION	MODELS USABLE ON CH-34C	(4) UNIT OF ISSUE	(5) QTY INC IN UNIT PACK	(6) QTY INC IN UNIT	(7) 30-DAY DS GS MAINT ALW (a) 1-20	(b) 21-50	(c) 51-100	(8) 1-YR ALW PER 100 EQUIP CNTGCY	(9) DEPOT MAINT ALW PER 100 EQUIP	(10) ILLUSTRATION (a) FIG NO	(b) ITEM NO
			5930-655-1518	MS35058-27	<96906>	...SWITCH,TOGGLE.....		EA		1	*	*	*		*	132	57
P	F		1560-639-0600	S1655-61149-3	<78286>	...PANEL,RESCUE HOIST SWITCH.		EA		1	*	*	*		REF	132	58
MF	O			MS18029-1S7	<96906>	.COVER,TERMINAL BOARD..... MAKEFR AR 5940-642-1381 TERM BOARD		EA		1						132	61
			1680-631-1052	1016	<98708>	.TESTER,HOIST.....		EA								132	
P	F		1680-630-5659	1016-1	<98708>	.TESTER HOIST..... RPLS-- 1680-631-1052		EA		1	*	*	*		*	132	61A
MF	O			MS25036	<96906>	.COVER,TERMINAL BOARD..... MAKEFR AR 5940-642-1381 TERM BOARD		EA		1						132	62
			5940-950-1610	MS27212-1-20	<96906>	.TERMINAL BOARD..... ATTACHING PARTS		EA		1	*	*	*		REF	132	
			5305-889-2999	MS35206-217	<96906>	.SCREW,MACHINE.....		HD		2	*	*	*		*	132	
			5310-550-5009	MS15795-704	<96906>	.WASHER,FLAT.....		HD		2	*	*	*		*	132	
			5310-088-0551	MS21044N04	<96906>	.NUT,SELF-LOCKING,HEXAGON.... ---*---		EA		2	*	*	*		*	132	
MF	O			MS18029-1S3	<96906>	.COVER,TERMINAL BOARD..... MAKEFR AR 5940-907-5939 NUT		EA		1						132	63
P	F		5940-950-1610	MS25123-1-20	<96906>	.TERMINAL BOARD..... ATTACHING PARTS		EA		1	*	*	*		REF	132	
			5305-889-2999	MS35206-217	<96906>	.SCREW,MACHINE.....		HD		2	*	*	*		*	132	
			5310-550-5009	MS15795-704	<96906>	.WASHER,FLAT.....		HD		2	*	*	*		*	132	
			5310-088-0551	MS21044N04	<96906>	.NUT,SELF-LOCKING,HEXAGON.... ---*---		EA		2	*	*	*		*	132	
P	F		6625-166-1005	MS91587-4	<96906>	.SHUNT,INSTRUMENT..... ATTACHING PARTS		EA		1	*	*	*		REF	132	66
			5305-958-1012	MS35219-57	<96906>	.SCREW,MACHINE..... ---*---		HD		2	*	*	*		*	132	67
				S1655-61103	<78286>	.LIGHT INSTALLATION,CABIN.... DOME				2						132	
AO	O			S1655-61104	<78286>	..LIGHT ASSEMBLY..... ATTACHING PARTS		EA		1						132	68
			5305-984-6201	MS35206-253	<96906>	..SCREW,MACHINE.....				4	*	*	*		*	132	69
			5310-184-8966	AN960PD8	<88044>	..WASHER,FLAT.....		HD		4	*	*	*		*	132	
			5340-826-5863	NAS42DD6-68	<80205>	..SPACER..... ---*---		EA		4	*	*	*		*	132	
P	O		6220-299-7136	MS25358-1	<96906>	...LIGHT,DOME RPLS--..... 6220-299-7431, 6220-512-6648, 6220-836-1696,& 6220-875-6579 ATTACHING PARTS		EA		1	REF	REF	REF		REF	132	70
			5305-889-3000	MS35206-230	<96906>	...SCREW,MACHINE.....		HD		4	*	*	*		*	132	71
			5310-187-2398	AN960PD6L	<88044>	...WASHER,FLAT..... ---*---		HD		4	*	*	*		*	132	
P	O		6220-283-9732	57A3A011	<80064>	....LENS,DOME LIGHT.....		EA		1	*	*	*		REF	132	
P	O		6240-155-7784	MS25232-307	<96906>	...LAMP,INCANDESCENT.....		EA		1	*	*	*		REF	132	72
P	O		6240-155-7932	MS25235R311	<96906>	...LAMP,INCANDESCENT.....		EA		1	*	*	*		REF	132	73
MF	F			S1655-61105-2	<78286>	...PLATE ASSEMBLY..... MAKEFR		EA		1						132	74

(1) SOURCE, MAINT AND REC CODE (a) SOURCE CODE	(b) MAINT LEVEL	(c) REC CODE	(2) FEDERAL STOCK NUMBER	REFERENCE NUMBER	(3) DESCRIPTION	MODELS USABLE ON CH-34C	(4) UNIT OF ISSUE	(5) QTY INC IN UNIT PACK	(6) QTY INC IN UNIT	(7) 30-DAY DS/GS MAINT ALW (a) 1-20	(b) 21-50	(c) 51-100	(8) 1-YR ALW PER 100 EQUIP CNTGCY	(9) DEPOT MAINT ALW PER 100 EQUIP	(10) ILLUSTRATION (a) FIG NO	(b) ITEM NO
					CONTINUED										132	74
					AR 9535-167-2280 AL ALLY SH											
			5310-272-7041	AN366DF632A <88044>	....NUT,SELF-LOCKING,PLATE...		EA		4	*	*	*		*	132	75
				S1655-61112 <78286>	.COVER INSTALLATION,CABIN....				1						132	
					DOME LIGHT											
P	F		1560-691-4469	S1655-61105-1 <78286>	..COVER ASSEMBLY.....		EA		1	*	*	*		REF	132	78
					ATTACHING PARTS											
			5305-286-1772	AN525-832R14 <88044>	..SCREW,MACHINE.....		EA		4	*	*	*		*	132	79
			5310-184-8966	AN960PD8 <88044>	..WASHER,FLAT.....		HD		4	*	*	*		*	132	
					---*---											
P	F		1560-551-2096	S1655-61105-3 <78286>	..GASKET.....		EA		1	*	*	*		REF	132	80
				S1655-61128 <78286>	.FUSELAGE AND POSITION.....				1						132	81
					LIGHTS INSTALLATION											
					SEE FIG.134 FOR BREAKDOWN											
MF	O			397-1 <94640>	.COVER,TERMINAL BOARD.....		EA		1						132	82
					MAKEFR											
					AR 5940-642-1381 TERM BOARD											
MF	O			AN3436-2-1 <88044>	.TERMINAL BOARD.....		EA		1						132	
					MAKEFR											
					AR 5940-950-1610 TERM BOARD											
					ATTACHING PARTS											
			5305-984-4976	MS35206-219 <96906>	.SCREW,MACHINE.....		HD		2	*	*	*		*	132	
			5310-550-5009	MS15795-704 <96906>	.WASHER,FLAT.....		HD		2	*	*	*		*	132	
			5310-088-0551	MS21044N04 <96906>	.NUT,SELF-LOCKING,HEXAGON....		EA		2	*	*	*		*	132	
					---*---											
				S1655-61432 <78286>	.LIGHT INSTALLATION,CABIN....				1						132	
					SPOT											
P	O		6220-988-5310	MS17245-1 <96906>	..LIGHT,COCKPIT,AIRCRAFT.....		EA		AR	*	REF	REF		REF	132	83
					ATTACHING PARTS											
			5305-889-3000	MS35206-230 <96906>	..SCREW,MACHINE.....		HD		2	*	*	*		*	132	84
			5310-188-7721	AN960PD6 <88044>	..WASHER,FLAT.....		HD		2	*	*	*		*	132	
			5310-081-8087	MS21044N06 <96906>	..NUT,SELF-LOCKING,HEXAGON...		EA		2	*	*	*		*	132	
					---*---											
				S1655-61434 <78286>	.BELL INSTALLATION,.....				1						132	
					EMERGENCY ALARM											
P	O		6350-653-5729	80364 <19975>	..BELL,ELECTRICAL.....		EA		1	*	*	*		REF	132	85
					ATTACHING PARTS											
			5305-286-0213	AN525-832R10 <88044>	..SCREW,MACHINE.....		HD		2	*	*	*		*	132	86
			5310-184-8966	AN960PD8 <88044>	..WASHER,FLAT.....		HD		2	*	*	*		*	132	
			5310-811-3494	MS21044N08 <96906>	..NUT,SELF-LOCKING,HEXAGON...		EA		2	*	*	*		*	132	
					---*---											
P	O		6240-155-8714	MS25231-313 <96906>	.LAMP,INCANDESCENT.....		EA		1	REF	REF	REF		REF	132	87
P	F		6220-295-0897	MS25027-1 <88044>	.LIGHT,PANEL.....		EA		1	REF	REF	REF		REF	132	88
MF	O			MS18029-1S3 <96906>	.COVER,TERMINAL BOARD.....		EA		1						132	89
					MAKEFR											
					AR 5940-907-5939											
P	F		5940-950-1610	MS25123-1-20 <96906>	.TERMINAL BOARD.....		EA		1	*	*	*		REF	132	
					ATTACHING PARTS											
			5305-889-2999	MS35206-217 <96906>	.SCREW,MACHINE.....		HD		2	*	*	*		*	132	
			5310-550-5009	MS15795-704 <96906>	.WASHER,FLAT.....		HD		2	*	*	*		*	132	
			5310-088-0551	MS21044N04 <96906>	.NUT,SELF-LOCKING,HEXAGON....		EA		2	*	*	*		*	132	
					---*---											

(1) SOURCE, MAINT AND REC CODE (a) SOURCE CODE	(b) MAINT LEVEL	(c) REC CODE	(2) FEDERAL STOCK NUMBER	REFERENCE NUMBER	(3) DESCRIPTION	MODELS USABLE ON CH-34C	(4) UNIT OF ISSUE	(5) QTY INC IN UNIT PACK	(6) QTY INC IN UNIT	(7) 30-DAY DS GS MAINT ALW (a) 1-20	(b) 21-50	(c) 51-100	(8) 1-YR ALW PER 100 EQUIP CNTGCY	(9) DEPOT MAINT ALW PER 100 EQUIP	(10) ILLUSTRATION (a) FIG NO	(b) ITEM NO
				S1655-61707 <78286>	.CONTROL INSTALLATION,FUEL... AND EQUIPMENT				1						132	
P	F	R	6680-566-6662	2222-017-30 <97485>	..CONTROL,UNIT,FUEL LEVEL.... ATTACHING PARTS		EA		1	*	*	2		*	132	90
			5305-989-7435	MS35207-264 <96906>	..SCREW,MACHINE.....		HD		1	*	*	*		*	132	91
			5310-183-4406	AN960PD10 <88044>	..WASHER,FLAT.....		HD		3	*	*	*		*	132	
			5310-877-5798	MS21044D3 <96906>	..NUT,SELF-LOCKING,HEXAGON...		EA		1	*	*	*		*	132	
			5305-954-0944	N80P16022C6 <03538>	..SCREW,MACHINE.....		EA		1	*	*	*		*	132	92
			5310-183-4406	AN960PD10 <88044>	..WASHER,FLAT.....		HD		3	*	*	*		*	132	
			5310-877-5798	MS21044D3 <96906>	..NUT,SELF-LOCKING,HEXAGON...		EA		1	*	*	*		*	132	
			5305-954-0944	N80P16022C6 <03538>	..SCREW,MACHINE.....		EA		2	*	*	*		*	132	93
			5310-183-4406	AN960PD10 <88044>	..WASHER,FLAT.....		HD		6	*	*	*		*	132	
			5310-877-5798	MS21044D3 <96906>	..NUT,SELF-LOCKING,HEXAGON...		EA		2	*	*	*		*	132	
					---*---											
P	D		6680-566-6664	2222-33-2 <83296>	...BRACKET ASSEMBLY.....		EA		1					*	132	
P	D		6680-567-3559	2222-33-1 <83296>	...BRACKET.....		EA		1					*	132	
P	H		5340-489-3446	108107-1 <37695>	...MOUNT,RESILIENT.....		EA		1	*	*	*		*	132	
P	D		5310-190-2959	164-79 <83296>	..WASHER,FLAT.....		EA		4	*	*	*		*	132	
P	O		6140-613-9811	S1655-61908-1 <78286>	.TUBE,BATTERY BOX.....		EA		1	*	*	*		*	132	95
				S1655-61908-2 <78286>	.ADAPTER,BATTERY BOX.....		EA		1						132	96
P	F		1560-330-0875	S1655-61724 <78286>	.PANEL ASSEMBLY,INVERTER..... SHIELD		EA		1	*	*	*		*	132	97
			5310-728-5510	MS21078-3 <96906>	..NUT,SELF-LOCKING,PLATE.....		EA		1	*	*	*		*	132	98
P	F		5325-449-3024	2600-1W <71286>	..STUD.....		EA		5	*	*	*		*	132	100
P	F		5310-781-2804	2600LW <71286>	..WASHER.....		EA		5	*	*	*		REF	132	101
P	F		5325-489-0931	4002-4W <71286>	..STUD ASSEMBLY,TURNLOCK..... FASTENER		EA		3	*	*	*		*	132	102
P	F		5325-297-1970	4002-3W <71286>	..STUD ASSEMBLY,TURNLOCK..... FASTENER		EA		3	*	*	*		*	132	
P	F		5340-598-1474	R4G <71286>	..RING,RETAINING.....		EA		3	*	*	*		*	132	103
P	F		5325-769-5359	4002N2-040 <71286>	..GROMMET,EYELET TURNLOCK....		EA		1	2	4	7		*	132	104
P	O		9320-221-4387	481 <49944>	..RUBBER,SPECIAL SHAPED..... SECTION		FT		AR	*	*	*		*	132	105
X1				S1655-61724-1 <78286>	..PANEL,INVERTER SHIELD.....		EA		1						132	106
				S1655-61925 <78286>	.INVERTER INSTALLATION,AC.... POWER				1						132	106A
				S1655-61925-1 <78286>	.INVERTER INSTALLATION,AC.... POWER				1						132	
P	O		5950-625-9456	9T39Y5 <24446>	..TRANSFORMER..... ATTACHING PARTS		EA		1	*	*	*		*	132	106B
			5305-558-8934	AN525D10R8 <88044>	..SCREW,MACHINE.....		HD		2	*	*	*		*	132	106C
			5310-167-0753	AN960PD10L <88044>	..WASHER,FLAT.....		HD		2	*	*	*		*	132	
			5310-905-3081	MS21083D3 <96906>	..NUT,SELF-LOCKING,HEXAGON...				2	*	*	*		*	132	
					---*---											
P	O		6125-669-5968	AN3533-1 <88044>	..MOTOR,GENERATOR..... ATTACHING PARTS		EA		1	*	*	*		*	132	106D
			5306-182-2059	AN3H6A <88044>	..BOLT,MACHINE.....		HD		8	*	*	*		*	132	106E
			5310-183-4406	AN960PD10 <88044>	..WASHER,FLAT.....		HD		8	*	*	*		*	132	
			5310-167-0765	AN970-3 <88044>	..WASHER,FLAT.....		HD		8	*	*	*		*	132	
			5310-807-1467	MS21042-3 <96906>	..NUT,SELF-LOCKING,HEXAGON...				8	*	*	*		*	132	
					---*---											
P	D		5340-475-3920	FR20-31 <31435>	.BRACKET ASSEMBLY.....		EA		1					*	132	

(1) SOURCE, MAINT AND REC CODE (a) SOURCE CODE	(b) MAINT LEVEL	(c) REC CODE	(2) FEDERAL STOCK NUMBER	REFERENCE NUMBER	(3) DESCRIPTION	MODELS USABLE ON CH-34C	(4) UNIT OF ISSUE	(5) QTY INC IN UNIT PACK	(6) QTY INC IN UNIT	(7) 30-DAY DS/GS MAINT ALW (a) 1-20	(b) 21-50	(c) 51-100	(8) 1-YR ALW PER 100 EQUIP CNTGCY	(9) DEPOT MAINT ALW PER 100 EQUIP	(10) ILLUSTRATION (a) FIG NO	(b) ITEM NO
P	F		5940-825-7865	397-5 <94640>	.COVER,TERMINAL BOARD.....		EA		1	*	*	*		REF	132	107
MF	O			397-3 <94640>	.COVER,TERMINAL BOARD.....		EA		1						132	108
					MAKEFR											
					AR 5940-907-5939 NUT											
P	F		5940-950-1610	MS25123-1-20 <96906>	.TERMINAL BOARD.....		EA		1	*	*	*		REF	132	
					ATTACHING PARTS											
			5305-889-2999	MS35206-217 <96906>	.SCREW,MACHINE.....		HD		2	*	*	*		*	132	
			5310-550-5009	MS15795-704 <96906>	.WASHER,FLAT.....		HD		2	*	*	*		*	132	
			5310-088-0551	MS21044N04 <96906>	.NUT,SELF-LOCKING,HEXAGON....		EA		2	*	*	*		*	132	
					---*---											
			5325-276-6343	MS35489-23 <96906>	.GROMMET,RUBBER.....		EA		1	*	*	*		*	132	111
			5310-262-5076	MS20341-6B <96906>	..NUT,PLAIN,HEXAGON.....		HD		1	*	*	*		*	132	114
			5310-167-0816	AN960-6 <88044>	..WASHER,FLAT.....		HD		2	*	*	*		*	132	115
			5310-262-5076	MS20341-6B <96906>	..NUT,PLAIN,HEXAGON.....		HD		1	*	*	*		*	132	116
			5310-167-0816	AN960-6 <88044>	..WASHER,FLAT.....		HD		2	*	*	*		*	132	117
			5310-262-5076	MS20341-6B <96906>	..NUT,PLAIN,HEXAGON.....		HD		1	*	*	*		*	132	118
			5310-167-0816	AN960-6 <88044>	..WASHER,FLAT.....		HD		2	*	*	*		*	132	119
			5310-262-5076	MS20341-6B <96906>	..NUT,PLAIN,HEXAGON.....		HD		1	*	*	*		*	132	120
			5310-184-8977	M35338-98 <96906>	..WASHER,LOCK.....		EA		2	*	*	*		*	132	121
			5310-720-8528	MS35690-611 <96906>	..NUT,PLAIN,HEXAGON.....		EA		2	*	*	*		*	132	125
			5310-576-0548	AN935B616L <88044>	..WASHER,LOCK.....		HD		2	*	*	*		*	132	126
			5310-167-0821	AN960-616 <88044>	..WASHER,FLAT.....		HD		2	*	*	*		*	132	127
			5310-720-8528	MS35690-611 <96906>	..NUT,PLAIN,HEXAGON.....		EA		2	*	*	*		*	132	128
			5310-167-0821	AN960-616 <88044>	..WASHER,FLAT.....		HD		2	*	*	*		*	132	129
			5310-720-8528	MS35690-611 <96906>	..NUT,PLAIN,HEXAGON.....		EA		2	*	*	*		*	132	130
			5310-576-0548	AN935B616L <88044>	..WASHER,LOCK.....		HD		2	*	*	*		*	132	131
			5310-167-0821	AN960-616 <88044>	..WASHER,FLAT.....		HD		2	*	*	*		*	132	132
			5310-720-8528	MS35690-611 <96906>	..NUT,PLAIN,HEXAGON.....		EA		2	*	*	*		*	132	133
			5310-167-0821	AN960-616 <88044>	..WASHER,FLAT.....		HD		2	*	*	*		*	132	134
P	F		5307-639-0650	S1655-61138-6 <78286>	..STUD,PLAIN.....		EA		2	*	*	*		REF	132	135
AF	F			S1655-61918 <78286>	.EQUIPMENT ASSEMBLY,FUEL.....		EA		1						132	138
					CONTROL USBL EFF 56-4313											
					THRU 57-1741											
AF	F			S1655-61918-1 <78286>	.EQUIPMENT ASSEMBLY,FUEL.....		EA		1						132	
					CONTROL USBL EFF 57-1742											
					& SUBSEQUENT											
					ATTACHING PARTS											
				AN253-1-825 <88044>	.PIN.....		EA		1						132	139
					---*---											
P	F	R	6680-566-9407	2222-015-29 <97485>	..CONTROL UNIT,SINGLE CHANNEL		EA		1	*	*	*		*	132	140
					ATTACHING PARTS											
			5305-558-8934	AN525D10R8 <88044>	..SCREW,MACHINE.....		HD		4	*	*	*		*	132	141
			5310-183-4406	AN960PD10 <88044>	..WASHER,FLAT.....		HD		4	*	*	*		*	132	
			5310-905-3081	MS21083D3 <96906>	..NUT,SELF-LOCKING,HEXAGON...				4	*	*	*		*	132	
					---*---											
				TD805S <74063>	..RELAY,VOLTAGE.....		EA		1						132	142
					ATTACHING PARTS											
			5305-558-8934	AN525D10R8 <88044>	..SCREW,MACHINE.....		HD		3	*	*	*		*	132	143
			5310-183-4406	AN960PD10 <88044>	..WASHER,FLAT.....		HD		3	*	*	*		*	132	
			5310-905-3081	MS21083D3 <96906>	..NUT,SELF-LOCKING,HEXAGON...				3	*	*	*		*	132	
					---*---											
P	O		5945-237-1348	AN3314-1 <88044>	..RELAY,ARMATURE.....		EA		1	*	*	*		REF	132	144

(1) SOURCE, MAINT AND REC CODE (a) SOURCE CODE	(b) MAINT LEVEL	(c) REC CODE	(2) FEDERAL STOCK NUMBER	(3) DESCRIPTION REFERENCE NUMBER			MODELS USABLE ON CH-34C	(4) UNIT OF ISSUE	(5) QTY INC IN UNIT PACK	(6) QTY INC IN UNIT	(7) 30-DAY DS GS MAINT ALW (a) 1-20	(b) 21-50	(c) 51-100	(8) 1-YR ALW PER 100 EQUIP CNTGCY	(9) DEPOT MAINT ALW PER 100 EQUIP	(10) ILLUSTRATION (a) FIG NO	(b) ITEM NO
						CONTINUED										132	144
						ATTACHING PARTS											
			5305-079-1159	AN526DD832R8	<88044>	..SCREW,MACHINE.....		HD		2	*	*	*		*	132	145
			5310-184-8966	AN960PD8	<88044>	..WASHER,FLAT.....		HD		2	*	*	*		*	132	
			5310-060-2039	MS21044D08	<96906>	..NUT,SELF-LOCKING,HEXAGON...		EA		2	*	*	*		*	132	
						---*---											
P	O		5945-295-6765	PR9502A	<77221>	..RELAY,SOLENOID.....		EA		1	*	*	*		*	132	146
						ATTACHING PARTS											
			5305-558-8934	AN525D10R8	<88044>	..SCREW,MACHINE.....		HD		4	*	*	*		*	132	147
			5310-183-4406	AN960PD10	<88044>	..WASHER,FLAT.....		HD		4	*	*	*		*	132	
			5310-905-3081	MS21083D3	<96906>	..NUT,SELF-LOCKING,HEXAGON...				4	*	*	*		*	132	
						---*---											
P	F		6680-566-6665	2222-49	<97485>	.COVER.....		EA		1		*	*		*	132	
P	F		1560-672-4821	S1655-61917-1	<78286>	...PANEL,CIRCUIT BREAKER.....		EA		1	*	*	*		*	132	
AF	F			S1620-63035-2	<78286>	...SHELF ASSEMBLY.....		EA		1						132	148
						ATTACHING PARTS											
				MS20470AD4	<96906>	...RIVET.....		EA		10						132	149
						---*---											
P	F		1560-633-6960	S1620-63035-12	<78286>	....SHELF ASSEMBLY.....		EA		1	*	*	*		*	132	149A
P	F		5325-355-8963	S4-200	<72794>	....LOCKSPRING,TURNLOCK.....		EA		3	*	*	*		REF	132	150
						FASTENER											
P	F		1560-629-4603	SS4050-2	<78286>	....SPACER.....		EA		2	*	REF	REF		REF	132	
P	F		1560-056-2319	S1620-63035-14	<78286>	....HINGE,SHELF,CABIN.....		EA		1	*	*	*		*	132	152
						EQUIPMENT											
						ATTACHING PARTS											
				MS20470AD4	<96906>	....RIVET.....		EA		6						132	153
						---*---											
				S1655-61910	<78286>	.BATTERY INSTALLATION USBL..				1						132	154
						EFF 56-4313 AND SUBSEQUENT											
						SEE FIG.141 FOR BREAKDOWN											
MF	O			397-3	<94640>	.COVER,TERMINAL BOARD.....		EA		1						132	155
						MAKEFR											
						AR 5940-642-1381 TERM BOARD											
P	F		5940-950-1610	MS25123-1-20	<96906>	.TERMINAL BOARD.....		EA		1	*	*	*		REF	132	
						ATTACHING PARTS											
			5305-151-1379	MS35206	<88044>	.SCREW,MACHINE.....		HD		2	*	*	*		*	132	
			5310-550-5009	MS15795-704	<96906>	.WASHER,FLAT.....		HD		2	*	*	*		*	132	
			5310-088-0551	MS21044N04	<96906>	.NUT,SELF-LOCKING,HEXAGON....		EA		2	*	*	*		*	132	
						---*---											
MF	O			MS25036	<96906>	.COVER,TERMINAL BOARD.....		EA		1						132	156
						MAKEFR											
						AR 5940-642-1381 TERM BOARD											
MF	F			AN3436-2-6	<88044>	.TERMINAL BOARD.....		EA		1						132	
						MAKEFR											
						AR 5940-950-1610 TERM BOARD											
						ATTACHING PARTS											
			5305-889-2999	MS35206-217	<96906>	.SCREW,MACHINE.....		HD		2	*	*	*		*	132	
			5310-550-5009	MS15795-704	<96906>	.WASHER,FLAT.....		HD		2	*	*	*		*	132	
			5310-088-0551	MS21044N04	<96906>	.NUT,SELF-LOCKING,HEXAGON....		EA		2	*	*	*		*	132	
						---*---											
MF	O			397-1	<94640>	.COVER,TERMINAL BOARD.....		EA		1						132	157
						MAKEFR											

(1) SOURCE, MAINT AND REC CODE (a) SOURCE CODE	(b) MAINT CODE	(c) REC CODE	(2) FEDERAL STOCK NUMBER	REFERENCE NUMBER	(3) DESCRIPTION	MODELS USABLE ON CH-34C	(4) UNIT OF ISSUE	(5) QTY INC IN UNIT PACK	(6) QTY INC IN UNIT	(7) 30-DAY DS GS MAINT ALW (a) 1-20	(b) 21-50	(c) 51-100	(8) 1-YR ALW PER 100 EQUIP CNTGCY	(9) DEPOT MAINT ALW PER 100 EQUIP	(10) ILLUSTRATION (a) FIG NO	(b) ITEM NO
					CONTINUED										132	157
					AR 5940-642-1381 TERM BOARD											
MF	O			AN3436-2-1 <88044>	.TERMINAL BOARD.....		EA		1						132	
					MAKEFR											
					AR 5940-950-1610 TERM BOARD											
					ATTACHING PARTS											
			5305-889-2999	MS35206-217 <96906>	.SCREW,MACHINE.....		HD		2	*	*	*		*	132	
			5310-550-5009	MS15795-704 <96906>	.WASHER,FLAT.....		HD		2	*	*	*		*	132	
			5310-088-0551	MS21044N04 <96906>	.NUT,SELF-LOCKING,HEXAGON....		EA		2	*	*	*		*	132	
					---*---											
MF	O			MS18029-153 <96906>	.COVER,TERMINAL BOARD.....		EA		1						132	158
					MAKEFR											
					AR 5940-642-1381 TERM BOARD											
P	F		5940-950-1610	MS25123-1-20 <96906>	.TERMINAL BOARD.....		EA		1	*	*	*		REF	132	
					ATTACHING PARTS											
			5305-889-2999	MS35206-217 <96906>	.SCREW,MACHINE.....		HD		2	*	*	*		*	132	
			5310-550-5009	MS15795-704 <96906>	.WASHER,FLAT.....		HD		2	*	*	*		*	132	
			5310-088-0551	MS21044N04 <96906>	.NUT,SELF-LOCKING,HEXAGON....		EA		2	*	*	*		*	132	
					---*---											
MF	F			S1607-2402-4 <78286>	.SUPPORT,ANGLE.....		EA		1						132	
					MAKEFR											
					AR 9535-554-1413 AL ALLY SH											
				S1655-61114-1 <78286>	LANDING LIGHT CONTROL BOX....										133	
					INSTALLATION SEE FIG.131											
					AND 132 FOR NHA											
AF	F			S1655-61115-1 <78286>	.BOX ASSEMBLY-LANDING GEAR...		EA		1						133	1
					SWITCH AND CONTROLS											
					ATTACHING PARTS											
			5305-984-6195	MS35206-247 <96906>	.SCREW,MACHINE.....				1	*	*	*		*	133	2
			5310-184-8966	AN960PD8 <88044>	.WASHER,FLAT.....		HD		2	*	*	*		*	133	
			5310-811-3494	MS21044N08 <96906>	.NUT,SELF-LOCKING,HEXAGON....		EA		1	*	*	*		*	133	
			5340-548-7812	EAB700-20 <81996>	.CLAMP,LOOP.....		EA		1	*	*	*		*	133	3
			5340-989-4569	EAB700D9 <81996>	.CLAMP,LOOP.....		EA		1	*	*	*		*	133	4
					---*---											
			5930-655-1513	AN3021-1 <88044>	..SWITCH,TOGGLE.....		EA		1	*	*	*		*	133	5
			5930-655-1513	AN3021-1 <88044>	..SWITCH,TOGGLE.....		EA		1	*	*	*		*	133	9
			5930-636-2682	446101 <81579>	..SWITCH,TOGGLE.....		EA		1	*	*	*		*	133	10
					ATTACHING PARTS											
			5305-079-1159	AN526D0832R8 <88044>	..SCREW,MACHINE.....		HD		1	*	*	*		*	133	11
					---*---											
P	F		5930-296-5845	C1006 <81640>	..SWITCH,PUSH.....		EA		1	*	*	*		REF	133	12
X2	D		1560-701-2214	S1655-61119-1 <78286>	..PLATE,INSTRUCTION.....		EA		1					*	133	13
P	F		1560-339-9577	S1655-61143 <78286>	..CAP,LANDING LIGHT.....		EA		1	*	*	*		*	133	14
					ATTACHING PARTS											
			5305-889-3001	MS35206-231 <88044>	..SCREW,MACHINE.....		HD		4	*	*	*		*	133	15
			5310-045-4007	MS35338-41 <96906>	..WASHER,LOCK.....		HD		4	*	*	*		*	133	

(1) SOURCE, MAINT AND REC CODE (a) SOURCE CODE	(b) MAINT LEVEL	(c) REC CL CODE	(2) FEDERAL STOCK NUMBER	REFERENCE NUMBER	(3) DESCRIPTION	MODELS USABLE ON CH-34C	(4) UNIT OF ISSUE	(5) QTY INC IN UNIT PACK	(6) QTY INC IN UNIT	(7) 30-DAY DS GS MAINT ALW (a) 1-20	(b) 21-50	(c) 51-100	(8) 1-YR ALW PER 100 EQUIP CNTGCY	(9) DEPOT MAINT ALW PER 100 EQUIP	(10) ILLUSTRATION (a) FIG NO	(b) ITEM NO
					CONTINUED										133	
					---*---											
P	F		3110-278-7157	R6ZZQ5A7 <38443>	..BEARING,BALL,ANNULAR.....		EA		1	*	*	*		*	133	16
P	F		3110-155-8418	R6FFANG25 <38443>	..BEARING,BALL,ANNULAR.....		EA		1		*	*		*	133	
P	F		3110-277-0475	115-00619-8445 <96906>	..BEARING,BALL,ANNULAR.....		EA		1	*	*	*		*	133	
				S1655-61119-2 <78286>	..NAME PLATE.....		EA		1						133	17
P	F		1560-570-0674	S1655-61116 <78286>	..HOUSING ASSEMBLY,LANDING... LIGHT SWITCH ATTACHING PARTS		EA		1	*	*	*		*	133	18
			5305-286-1768	AN525-8R20 <88044>	..SCREW,MACHINE.....		EA		1	*	*	*		*	133	19
			5310-184-8966	AN960PD8 <88044>	..WASHER,FLAT.....		HD		2	*	*	*		*	133	
			5310-811-3494	MS21044N08 <96906>	..NUT,SELF-LOCKING,HEXAGON...		EA		1	*	*	*		*	133	
					---*---											
P	F		5310-497-3782	RL18SB6 <83324>	...RING,LOCK,SERRATED.....		EA		4	*	*	*		*	133	20
P	F		5340-598-5662	RD903S85 <83324>	...INSERT,SCREW THREAD.....		EA		4	*	*	*		*	133	21
P	F		1560-567-5349	S1655-61118 <78286>	..CONDUIT,LANDING LIGHT.....		EA		1	*	*	*		*	133	22
				S1655-61128 <78286>	FUSELAGE AND POSITION..... LIGHTS INSTALLATION SEE FIG.131 AND 132 FOR NHA										134	
P	F		6220-283-9337	AN3033-9 <88044>	.LIGHT,NAVIGATIONAL..... AIRCRAFT ATTACHING PARTS		EA		2	*	REF	REF		*	134	1
			5305-150-9964	MS35190-28 <96906>	.SCREW,MACHINE.....		EA		3	*	*	*		*	134	2
			5310-188-7721	AN960PD6 <88044>	.WASHER,FLAT.....		HD		3	*	*	*		*	134	
					---*---											
			5330-260-8156	AN889-1 <88044>	.GASKET.....		EA		2	2	3	5		*	134	3
P	O		6220-151-7536	AN3042-1 <88044>	.LENS,AIRCRAFT,NAVIGATIONAL.. LIGHT		EA		1	*	*	*		*	134	4
P	O		6220-497-2213	AN3042-2 <88044>	.LENS,AIRCRAFT,NAVIGATIONAL.. LIGHT		EA		1	*	*	*		*	134	
P	O		6240-681-8366	MS25309-7512 <96906>	.LAMP,INCANDESCENT.....		EA		2	2	5	10		*	134	5
P	O		6220-283-9364	AN3092-3 <88044>	.LIGHT,NAVIGATIONAL,AIRCRAFT. ATTACHING PARTS		EA		1	*	*	*		REF	134	6
			5305-156-2861	AN505-4R8 <88044>	.SCREW,MACHINE.....		HD		2	*	*	*		*	134	7
			5310-550-5009	MS15795-704 <96906>	.WASHER,FLAT.....		HD		2	*	*	*		*	134	
					---*---											
P	O		1560-559-4759	S1655-61129 <78286>	.GASKET.....		EA		1	*	*	*		REF	134	9
P	O		6220-166-9786	AN3093-1 <88044>	.LENS,AIRCRAFT,NAVIGATIONAL..		EA		1	*	*	*		REF	134	10
P	O		6240-155-8714	MS25231-313 <96906>	.LAMP,INCANDESCENT.....		EA		1	REF	REF	REF		REF	134	11
P	F		6220-548-0313	MS25219-1 <96906>	.LIGHT,NAVIGATIONAL..... AIRCRAFT RPLS-- 6220-688-5053 ATTACHING PARTS		EA		1	*	*	*		REF	134	12
			5305-889-2999	MS35206-217 <96906>	.SCREW,MACHINE.....		HD		2	*	*	*		*	134	13
			5310-550-5009	MS15795-704 <88044>	.WASHER,FLAT.....		HD		2	*	*	*		*	134	
					---*---											

(1) SOURCE, MAINT AND REC CODE (a) SOURCE CODE	(b) MAINT LEVEL	(c) REC CODE	(2) FEDERAL STOCK NUMBER	REFERENCE NUMBER	(3) DESCRIPTION	MODELS USABLE ON CH-34C	(4) UNIT OF ISSUE	(5) QTY INC IN UNIT PACK	(6) QTY INC IN UNIT	(7) 30-DAY DS GS MAINT ALW (a) 1-20	(b) 21-50	(c) 51-100	(8) 1-YR ALW PER 100 EQUIP CNTGCY	(9) DEPOT MAINT ALW PER 100 EQUIP	(10) ILLUSTRATION (a) FIG NO	(b) ITEM NO
			5330-820-5600	AN3119-2 <88044>	.GASKET.....		EA		1	*	*	*		*	134	14
P	O		6220-504-2021	AN3110-4 <88044>	.LENS,AIRCRAFT,NAVIGATIONAL..		EA		1	*	*	*		*	134	15
P	O		6240-155-7784	MS25232-307 <96906>	.LAMP,INCANDESCENT.....		EA		1	*	*	*		REF	134	16
				S1655-61903 <78286>	INSTRUMENT PANEL WIRING..... ASSEMBLY SEE FIG.128 FOR NHA										135	
P	F		5935-283-1472	UD6-11 <91146>	.CONNECTER,PLUG,ELECTRICAL...		EA		1	*	*	*		*	135	1
MF	F			S1655-61668-4 <78286>	.CABLE ASSEMBLY,FUEL..... MAKEFR AR 6145-504-0362 CABLE 2 EA 5935-604-3244 CONNECTOR 2 EA 5935-951-0171 CONNECTOR		EA		1						135	2
MF	F			S1655-61668-2 <78286>	.CABLE ASSEMBLY,WING..... MAKEFR AR 6145-504-0362 CABLE 2 EA 5935-604-3244 CONNECTOR 2 EA 5935-951-0171 CONNECTOR		EA		1						135	3
P	F		5935-951-0171	5040-1 <95712>	..CONNECTOR,RECEPTACLE USBL. EFF 56-4284 & SUBSEQUENT		EA		1	*	*	*		*	135	
P	F		5935-283-1472	UD6-11 <91146>	.CONNECTOR,PLUG,ELECTRICAL...		EA		1	*	*	*		REF	135	4
				S1655-61412 <78286>	.PANEL INSTALLATION-SWITCH...				1						135	
AH	H			S1655-61413 <78286>	..PANEL ASSEMBLY-SWITCH.....		EA		1						135	5
AH	H			S1655-61413-4 <78286>	..PANEL ASSEMBLY-SWITCH.....		EA		1						135	
AH	H			S1655-61413-6 <78286>	..PANEL ASSEMBLY-SWITCH.....		EA		1						135	
P	F		5930-694-1733	S14-55-2239-1 <78286>	...GUARD ASSEMBLY,SWITCH.....		EA		1	*	*	*		*	135	6
			5930-615-7897	MS35059-31 <96906>	...SWITCH,TOGGLE.....		EA		1	*	*	*		*	135	7
			5930-655-1514	MS35058-22 <96906>	...SWITCH,TOGGLE.....CODE A		EA		1	*	*	*		*	135	8
			5930-655-1514	MS35058-22 <96906>	...SWITCH,TOGGLE.....CODE A		EA		1	*	*	*		*	135	9
P	O		6210-519-0448	MS25041-6 <96906>	...LIGHT ASSEMBLY.....		EA		6	*	*	*		REF	135	10
P	O		6240-155-8714	MS25231-313 <96906>	...LAMP,INCANDESCENT.....		EA		6	REF	REF	REF		REF	135	11
P	O		6210-519-2653	MS25010-4A <96906>	...LIGHT,PANEL.....		EA		4	*	REF	REF	REF	REF	135	12
P	F		6240-155-7836	MS25237-327 <96906>	...LAMP,INCANDESCENT.....		EA		4	REF	REF	REF	REF	REF	135	13
			5930-655-1522	MS35058-30 <96906>	...SWITCH,TOGGLE.....		EA		1	*	*	*		*	135	14
			5930-615-9376	MS35059-21 <96906>	...SWITCH,TOGGLE.....		EA		1	*	*	*		*	135	15
			5930-501-0395	MS25016-4 <96906>	...SWITCH,TOGGLE..... ATTACHING PARTS		EA		1	*	*	*		*	135	16
			5305-984-4988	MS35206-228 <96906>	...SCREW,MACHINE.....				2	*	*	*		*	135	17
P	O		6220-299-4104	MS25331-6 <96906>	...LIGHT,INDICATOR.....		EA		1	2	2	3		*	135	17A
P	O		6240-155-8714	MS25231-313 <96906>	...LAMP,INCANDESCENT.....		EA		1	REF	REF	REF		REF	135	
			5930-655-1520	MS35058-28 <96906>	...SWITCH,TOGGLE.....		EA		1	*	*	*		*	135	18
P	F		6110-613-9764	S1655-61413-5 <78286>	...PANEL,ELECTRICAL,..... INSTRUMENT		EA		1	*	*	*		*	135	19
				S1655-61413-7 <78286>	...PANEL ASSEMBLY.....		EA		1						135	20
X2	F		6110-613-9765	S1655-61413-8 <78286>	...PANEL,ELECTRICAL..... INSTRUMENT SWITCH USBL EFF 55-4402 & SUBSEQUENT		EA		1	*	*	*		*	135	

(1) SOURCE, MAINT AND REC CODE (a) SOURCE CODE	(b) MAINT LEVEL	(c) REC CODE	(2) FEDERAL STOCK NUMBER	REFERENCE NUMBER		(3) DESCRIPTION	MODELS USABLE ON CH-34C	(4) UNIT OF ISSUE	(5) QTY INC IN UNIT PACK	(6) QTY INC IN UNIT	(7) 30-DAY DS GS MAINT ALW (a) 1-20	(b) 21-50	(c) 51-100	(8) 1-YR ALW PER 100 EQUIP CNTGCY	(9) DEPOT MAINT ALW PER 100 EQUIP	(10) ILLUSTRATION (a) FIG NO	(b) ITEM NO
P	F		5325-543-2418	PF3 1-2 38	<72794>	....STUD,TURN-LOCK FASTENER..		EA		4	*	*	*		*	135	21
P	F		5340-201-0272	PS3 1-2	<72794>	....SPRING,FASTENER.....		EA		4	*	*	*		*	135	22
P	F		5325-291-9360	PC3 1-2	<72794>	....RETAINER.....		EA		4	*	*	*		*	135	23
						CODE A											
						USBL-EFF 53-4475 THRU											
						53-4554,54-882 THRU 54-937,											
						54-2860 THRU 54-2914,&											
						54-2995 THRU 54-2999											
				S1655-61420	<78286>	FIRE DETECTION WIRING.....										136	
						INSTALLATION SEE FIG.128											
						FOR NHA											
P	O		6340-349-2988	B01951	<33525>	.CABLE ASSEMBLY.....		EA		1	2	2	4		*	136	1
P	F		5935-028-0143	840649	<33525>	.CONNECTOR,PLUG,ELECTRICAL...		EA		1	*	*	*		*	136	2
P	F		6340-340-1801	205703	<33525>	.PLATE.....		EA		1	2	3	6		*	136	3
						ATTACHING PARTS											
			5305-687-6724	AN503-6-6	<88044>	.SCREW,MACHINE.....		HD		2	*	*	*		*	136	4
			5310-187-2398	AN960PD6L	<88044>	.WASHER,FLAT.....		HD		4	*	*	*		*	136	
			5310-905-8451	MS21083N06	<96906>	.NUT,SELF-LOCKING,HEXAGON....		HD		2	*	*	*		*	136	
						---*---											
P	F		6340-300-3617	205702	<33525>	.CAP.....		EA		1	4	10	19		*	136	5
P	F		1680-699-5797	804120	<33525>	.SENSING ELEMENT.....		EA		1	*	2	2		*	136	6
P	F		6340-340-1801	205703	<33525>	.PLATE.....		EA		2	REF	REF	REF		REF	136	7
						ATTACHING PARTS											
			5305-687-6724	AN503-6-6	<88044>	.SCREW,MACHINE.....		HD		2	*	*	*		*	136	8
			5310-187-2398	AN960PD6L	<88044>	.WASHER,FLAT.....		HD		4	*	*	*		*	136	
			5310-526-0696	MS20364-632A	<96906>	.NUT,SELF-LOCKING,HEXAGON....		HD		2	*	*	*		*	136	
						---*---											
			5340-990-9298	EAB700D3	<81996>	.CLAMP,LOOP.....		EA		3	*	*	*		*	136	9
						ATTACHING PARTS											
			5305-558-8934	AN525D10R8	<88044>	.SCREW,MACHINE.....		HD		1	*	*	*		*	136	10
			5310-183-4406	AN960PD10	<88044>	.WASHER,FLAT.....		HD		1	*	*	*		*	136	
			5310-905-3081	MS21083D3	<96906>	.NUT,SELF-LOCKING,HEXAGON....				1	*	*	*		*	136	
						---*---											
P	F		6350-390-6376	205098	<33525>	.GROMMET.....		EA		3	23	57	114		*	136	11
			5340-990-9298	EAB700D3	<81996>	.CLAMP,LOOP.....		EA		4	*	*	*		*	136	12
						ATTACHING PARTS											
			5305-558-8934	AN525D10R8	<88044>	.SCREW,MACHINE.....		HD		1	*	*	*		*	136	13
P	O		5310-560-5569	A10K75	<25472>	.NUT,BLIND RIVET.....		EA		1	*	*	*		REF	136	
						---*---											
P	F		6350-390-6376	205098	<33525>	.GROMMET.....		EA		4	REF	REF	REF		REF	136	14
MF	F			S1655-61163	<78286>	.TAB,IDENTIFICATION FIRE.....		EA		4						136	15
						MAKEFR											
						AR 9535-554-1415 AL ALLY SH											
			5340-990-9298	EAB700D3	<81996>	.CLAMP,LOOP.....		EA		5	*	*	*		*	136	16
						ATTACHING PARTS											
			5305-558-8934	AN525D10R8	<88044>	.SCREW,MACHINE.....		HD		1	*	*	*		*	136	17

(1) SOURCE, MAINT AND REC CODE (a) SOURCE CODE	(b) MAINT LEVEL	(c) REC CODE	(2) FEDERAL STOCK NUMBER	REFERENCE NUMBER		(3) DESCRIPTION	MODELS USABLE ON CH-34C	(4) UNIT OF ISSUE	(5) QTY INC IN UNIT PACK	(6) QTY INC IN UNIT	(7) 30-DAY DS GS MAINT ALW (a) 1-20	(b) 21-50	(c) 51-100	(8) 1-YR ALW PER 100 EQUIP CNTGCY	(9) DEPOT MAINT ALW PER 100 EQUIP	(10) ILLUSTRATION (a) FIG NO	(b) ITEM NO
P	O		5310-560-5569	A10K75	<25472>	.NUT,BLIND RIVET.....		EA		1	*	*	*		REF	136	
						---*---											
P	F		6350-390-6376	205098	<33525>	.GROMMET.....		EA		5	REF	REF	REF		REF	136	18
P	F		6340-300-3617	205702	<33525>	.CAP.....		EA		4	REF	REF	REF		REF	136	19
MF	F			S1655-61421-3	<78286>	.SUPPORT,FIRE DETECTOR..... RECEPTACLE		EA		1						136	20
						MAKEFR											
						AR 9535-232-0565 AL ALLY SH											
						ATTACHING PARTS											
			5320-167-4950	P4C	<29666>	.RIVET,BLIND.....		EA		5	*	*	*			136	21
						---*---											
P	F		6340-349-2989	801950	<33525>	.CABLE ASSEMBLY.....		EA		1	2	2	3		*	136	22
P	D		6340-349-2988	801951	<33525>	.CABLE ASSEMBLY.....		EA		1	REF	REF	REF		REF	136	23
P	F		5935-028-0142	840648	<33525>	.CONNECTOR,PLUG,ELECTRICAL...		EA		1	*	*	*		*	136	24
P	F		6340-340-1801	205703	<33525>	.PLATE.....		EA		1	REF	REF	REF		REF	136	25
						ATTACHING PARTS											
			5305-687-6724	AN503-6-6	<88044>	.SCREW,MACHINE.....		HD		2	*	*	*		*	136	26
			5310-187-2398	AN960PD6L	<88044>	.WASHER,FLAT.....		HD		4	*	*	*		*	136	
			5310-905-8451	MS21083N06	<96906>	.NUT,SELF-LOCKING,HEXAGON....		HD		2	*	*	*		*	136	
						---*---											
P	F		1680-640-8570	804144	<33525>	.SENSING ELEMENT,FIRE..... DETECTOR		EA		1	*	2	2		*	136	27
			5340-990-9298	EAB700D3	<81996>	.CLAMP,LOOP.....		EA		6	*	*	*		*	136	28
						ATTACHING PARTS											
			5305-558-8934	AN525D10R8	<88044>	.SCREW,MACHINE.....		HD		1	*	*	*		*	136	29
			5310-183-4406	AN960PD10	<88044>	.WASHER,FLAT.....		HD		1	*	*	*		*	136	
			5310-905-3081	MS21083D3	<96906>	.NUT,SELF-LOCKING,HEXAGON....				1	*	*	*		*	136	
						---*---											
P	F		6350-390-6376	205098	<33525>	.GROMMET.....		EA		6	REF	REF	REF		REF	136	30
			5340-990-9298	EAB700D3	<81996>	.CLAMP,LOOP.....		EA		12	*	*	*		*	136	31
						ATTACHING PARTS											
			5305-558-8934	AN525D10R8	<88044>	.SCREW,MACHINE.....		HD		1	*	*	*		*	136	32
P	O		5310-560-5569	A10K75	<25472>	.NUT,BLIND RIVET.....		EA		1	*	*	*		REF	136	
						---*---											
P	F		6350-390-6376	205098	<33525>	.GROMMET.....		EA		12	REF	REF	REF		REF	136	33
P	F		6340-340-1801	205703	<33525>	.PLATE.....		EA		2	REF	REF	REF		REF	136	34
						ATTACHING PARTS											
			5305-687-6724	AN503-6-6	<88044>	.SCREW,MACHINE.....		HD		2	*	*	*		*	136	35
			5310-187-2398	AN960PD6L	<88044>	.WASHER,FLAT.....		HD		4	*	*	*		*	136	
			5310-905-8451	MS21083N06	<96906>	.NUT,SELF-LOCKING,HEXAGON....		HD		2	*	*	*		*	136	
						---*---											
P	F		6340-300-3617	205702	<33525>	.CAP.....		EA		2	REF	REF	REF		REF	136	36
MF	F			S1655-61421-3	<78286>	.SUPPORT,FIRE DETECTOR..... RECEPTACLE		EA		1						136	37
						MAKEFR											
						AR 9535-232-0565 AL ALLY SH											
						ATTACHING PARTS											
			5320-167-4950	P4C	<29666>	.RIVET,BLIND.....		EA		5	*	*	*			136	38
						---*---											
				S1655-61421-4	<78286>	.SHIM,FIRE DETECTOR.....		EA		1						136	39
MF	F			S1655-61421-3	<78286>	.SUPPORT,FIRE DETECTOR..... RECEPTACLE		EA		1						136	40

(1) SOURCE, MAINT AND REC CODE (a) SOURCE CODE	(b) MAINT LEVEL	(c) REC CODE	(2) FEDERAL STOCK NUMBER	REFERENCE NUMBER		(3) DESCRIPTION	MODELS USABLE ON CH-34C	(4) UNIT OF ISSUE	(5) QTY INC IN UNIT PACK	(6) QTY INC IN UNIT	(7) 30-DAY DS GS MAINT ALW (a) 1-20	(b) 21-50	(c) 51-100	(8) 1-YR ALWPER 100 EQUIP CNTGCY	(9) DEPOT MAINT ALWPER 100 EQUIP	(10) ILLUSTRATION (a) FIG NO	(b) ITEM NO
						CONTINUED										136	40
						MAKEFR											
						AR 9535-232-0565 AL ALLY SH											
						ATTACHING PARTS											
			5320-167-4950	P4C	<29666>	.RIVET,BLIND.....		EA		5	*	*	*			136	41
						---*---											
P	F		1560-567-5350	S1655-61421-1	<78286>	.SUPPORT,FIRE DETECTOR.....		EA		2	*	*	*		*	136	42
						RECEPTACLE											
						ATTACHING PARTS											
			5305-558-8934	AN525D10R8	<88044>	.SCREW,MACHINE.....		HD		4	*	*	*		*	136	43
			5310-183-4406	AN960PD10	<88044>	.WASHER,FLAT.....		HD		4	*	*	*		*	136	
			5310-905-3081	MS21083D3	<96906>	.NUT,SELF-LOCKING,HEXAGON....				4	*	*	*		*	136	
						---*---											
			5340-990-9298	EAB700D3	<81996>	.CLAMP,LOOP.....		EA		1	*	*	*		*	136	44
						ATTACHING PARTS											
			5305-558-8934	AN525D10R8	<88044>	.SCREW,MACHINE.....		HD		1	*	*	*		*	136	45
			5310-183-4406	AN960PD10	<88044>	.WASHER,FLAT.....		HD		1	*	*	*		*	136	
			5310-905-3081	MS21083D3	<96906>	.NUT,SELF-LOCKING,HEXAGON....				1	*	*	*		*	136	
						---*---											
P	F		6350-390-6376	205098	<33525>	.GROMMET.....		EA		1	REF	REF	REF		REF	136	46
				S1655-61163	<78286>	.TAB,IDENTIFICATION FIRE.....		EA		1						136	47
			5340-989-4576	EAB700D24	<81996>	.CLAMP,LOOP.....		EA		5	*	*	*		*	136	48
			5340-990-9298	EAB700D3	<81996>	.CLAMP,LOOP.....		EA		5	*	*	*		*	136	49
						ATTACHING PARTS											
			5305-558-8934	AN525D10R8	<88044>	.SCREW,MACHINE.....		HD		1	*	*	*		*	136	50
			5310-183-4406	AN960PD10	<88044>	.WASHER,FLAT.....		HD		1	*	*	*		*	136	
			5310-905-3081	MS21083D3	<96906>	.NUT,SELF-LOCKING,HEXAGON....				1	*	*	*		*	136	
						---*---											
P	F		6350-390-6376	205098	<33525>	.GROMMET.....		EA		5	REF	REF	REF		REF	136	51
P	F		6340-349-2989	801950	<33525>	.CABLE ASSEMBLY.....		EA		1	REF	REF	REF		*	136	52
P	F		1680-300-3068	804048	<33525>	.SENSING ELEMENT,FIRE.....		EA		1	2	2	3		*	136	53
						DETECTOR											
P	F		6340-340-1801	205703	<33525>	.PLATE.....		EA		2	REF	REF	REF		REF	136	54
						ATTACHING PARTS											
			5305-687-6724	AN503-6-6	<88044>	.SCREW,MACHINE.....		HD		2	*	*	*		*	136	55
			5310-187-2398	AN960PD6L	<88044>	.WASHER,FLAT.....		HD		4	*	*	*		*	136	
			5310-905-8451	MS21083N06	<96906>	.NUT,SELF-LOCKING,HEXAGON....		HD		2	*	*	*		*	136	
						---*---											
P	F		6340-300-3617	205702	<33525>	.CAP.....		EA		2	REF	REF	REF		REF	136	56
				S1655-61660-1	<78286>	FUEL GAGING SYSTEM WIRING....										137	
						INSTALLATION SEE FIG.128											
						FOR NHA											
			5305-558-8934	AN525D10R8	<88044>	.SCREW,MACHINE.....		HD		1	*	*	*		*	137	1
			5310-183-4406	AN960PD10	<88044>	.WASHER,FLAT.....		HD		1	*	*	*		*	137	
			5310-807-1467	MS21042-3	<96906>	.NUT,SELF-LOCKING,HEXAGON....				1	*	*	*		*	137	
P	F		5915-212-7970	10JX52	<56289>	.FILTER,RADIO INTERFERENCE...		EA		1	*	*	*		*	137	2

(1) SOURCE, MAINT AND REC CODE (a) SOURCE CODE	(b) MAINT LEVEL	(c) REC CODE	(2) FEDERAL STOCK NUMBER	REFERENCE NUMBER	(3) DESCRIPTION	MODELS USABLE ON CH-34C	(4) UNIT OF ISSUE	(5) QTY INC IN UNIT PACK	(6) QTY INC IN UNIT	(7) 30-DAY DS GS MAINT ALW (a) 1-20	(b) 21-50	(c) 51-100	(8) 1-YR ALW PER 100 EQUIP CNTGCY	(9) DEPOT MAINT ALW PER 100 EQUIP	(10) ILLUSTRATION (a) FIG NO	(b) ITEM NO
					CONTINUED										137	2
					ATTACHING PARTS											
			5305-180-0004	AN525-8R8 <88044>	.SCREW,MACHINE.....		HD		2	*	*	*		*	137	
					---*---											
			5305-558-8934	AN525D10R8 <88044>	.SCREW,MACHINE.....		HD		1	*	*	*		*	137	3
			1560-691-4470	S1655-61661-21 <78286>	.CABLE ASSEMBLY,WIRING.....										137	
					RPL-BY PN S1655-61668-8											
MF	F			S1655-61668-8 <78286>	.CABLE ASSEMBLY,WIRING.....		EA		1						137	4
					RPLS-- 1560-691-4470											
					MAKEFR											
					AR 6145-851-8505 WIRE											
					1 EA 5935-555-1868 CONNECTOR											
					1 EA 5940-503-9995 TERM LUG											
P	F		5935-555-1868	1-906-1 <95712>	..CONNECTOR,PLUG.....		EA		1	*	*	*		*	137	5
P	F		5935-018-5343	163-0512-3 <97485>	..CONNECTOR,PLUG.....		EA		1	*	*	*		*	137	
			5940-503-9995	MS25036-1 <96906>	..TERMINAL,LUG.....		HD		1	*	*	*		*	137	6
X1				MD1932GN <90484>	..WIRE.....		FT		1						137	
P	F		5935-659-6569	163-0552 <97485>	.ADAPTER,CONNECTOR.....		EA		1	*	*	*		*	137	8
				S1655-61661-13 <78286>	.CABLE ASSEMBLY.....		EA		1						137	
P	F		5935-768-3864	163-0514-3 <97485>	..CONNECTOR,PLUG,ELECTRICAL..		EA		1		*	*		*	137	
			5940-503-9995	MS25036-1 <96906>	..TERMINAL,LUG.....		PG				*	*		*	137	
MF	F			S1655-61668-13 <78286>	.CABLE ASSEMBLY,FUEL SYSTEM..		EA		1						137	9
					MAKEFR											
					AR 6145-851-8505 WIRE											
					1 EA 5935-557-2162 CONNECTOR											
					1 EA 5940-503-9995 TERMINAL											
P	F		5935-557-2162	1-902-1 <95712>	.CONNECTOR.....		EA		1	*	*	*		*	137	
MF	F			S1655-61661-14 <78286>	.CABLE ASSEMBLY.....		EA		1						137	9A
					MAKEFR											
					AR 6145-851-8505 WIRE											
					1 EA 5935-018-5347 CONNECTOR											
					1 EA 5940-503-9995 TERMINAL											
P	F		5935-018-5347	163-0513-3 <97485>	..CONNECTOR,PLUG,ELECTRICAL..		EA		1	*	*	*		*	137	
			5940-503-9995	MS25036-1 <96906>	..TERMINAL,LUG.....		HD		1	*	*	*		*	137	
			6145-851-8505	MS25190B20 <96906>	..WIRE,ELECTRICAL.....		FT		AR	*	REF	REF	REF	*	137	
			6620-613-9948	S1655-61668-12 <78286>	.CABLE ASSEMBLY,FUEL SYSTEM..		EA			*	*	*			137	
					RPL-BY 6620-055-1606											
P	F		6620-055-1606	S1655-61668-14 <78286>	.CABLE ASSEMBLY,FUEL SYSTEM..		EA		1	*	*	2		*	137	10
					RPLS-- 6620-613-9948											
MF	F			S1655-61661-3 <78286>	.CABLE ASSEMBLY.....		EA		1						137	
					MAKEFR											
					AR 6145-851-8505 WIRE											
					2 EA 5935-552-4822 CONNECTOR											
P	F		5935-552-4822	163-0511-1 <97485>	..CONNECTOR,PLUG,ELECTRICAL..		EA		1	*	*	*		*	137	
			6145-851-8505	MS25190B20 <96906>	..WIRE,ELECTRICAL.....		FT		AR	*	REF	REF	REF	*	137	
P	F		5935-951-0151	1-903-1 <95712>	..CONNECTOR,RECEPTACLE.....		EA		1		*	*		*	137	
MF	F			S1655-61668-3 <78286>	.CABLE ASSEMBLY,WIRING.....		EA		1						137	11
					MAKEFR											
					AR 6145-504-0362 WIRE											
					2 EA 5935-501-5807 CONNECTOR											
P	F		5935-552-4822	163-0511-1 <97485>	..CONNECTOR,PLUG,ELECTRICAL..		EA		2	*	*	*		REF	137	12
P	F		5935-501-5807	1-317-1 <95712>	..PLUG.....		EA		2	*	*	*		*	137	

(1) SOURCE, MAINT AND REC CODE (a) SOURCE CODE	(b) MAINT LEVEL	(c) REC CODE	(2) FEDERAL STOCK NUMBER	REFERENCE NUMBER		(3) DESCRIPTION	MODELS USABLE ON CH-34C	(4) UNIT OF ISSUE	(5) QTY INC IN UNIT PACK	(6) QTY INC IN UNIT	(7) 30-DAY DS GS MAINT ALW (a) 1-20	(b) 21-50	(c) 51-100	(8) 1-YR ALW PER 100 EQUIP CNTGCY	(9) DEPOT MAINT ALW PER 100 EQUIP	(10) ILLUSTRATION (a) FIG NO	(b) ITEM NO
P	F		5935-553-2095	163-0551	<97485>	.ADAPTER,CONNECTOR.....		EA		1	*	*	*		*	137	13
P	F		9320-221-4387	481	<49944>	.RUBBER,SPECIAL-SHAPED..... SECTION		FT		AR	*	*	*		*	137	14
MF	F			S1655-61661-6	<78286>	.CABLE ASSEMBLY..... MAKEFR AR 5935-018-5343 WIRE 2 EA 5935-552-4822 CONNECTOR		EA		1						137	
P	F		5935-018-5347	163-0513-3	<97485>	..CONNECTOR,PLUG,ELECTRICAL..		EA		1	*	*	*		REF	137	
			6145-851-8505	MS25190B20	<96906>	..WIRE,ELECTRICAL.....		FT		AR	*	REF	REF	REF	*	137	
MF	F			S1655-61668-6	<78286>	.CABLE ASSEMBLY,FUEL SYSTEM.. MAKEFR AR 6145-851-8505 WIRE 1 EA 5935-555-1868 CONNECTOR 1 EA 5935-578-2640 CONNECTOR		EA		1						137	15
P	F		5935-018-5343	163-0512-3	<97485>	..PLUG.....		EA		2	*	*	*			137	16
P	F		5935-018-5347	163-0513-3	<97485>	..CONNECTOR,PLUG,ELECTRICAL..		EA		1	*	*	*		*	137	
P	F		5935-578-2640	1-907-1	<95712>	..CONNECTOR.....		EA		1	*	*	*		*	137	
P	F		5935-555-1868	1-906-1	<95712>	..CONNECTOR,PLUG.....		EA		1	*	*	*		REF	137	
X1				MD1932GN	<90484>	..WIRE.....		FT		1						137	
MF	F			S1655-61668-5	<78286>	.CABLE ASSEMBLY,FUEL SYSTEM.. MAKEFR AR 6145-504-0362 CABLE 2 EA 5935-583-5970 CONNECTOR		EA		1						137	18
P	F		5935-552-4822	163-0511-1	<97485>	..CONNECTOR,PLUG,ELECTRICAL..		EA		2	*	*	*		REF	137	19
X1				1-317-1	<95712>	..PLUG,CONNECTOR.....		EA		2						137	
P	F		5935-553-2095	163-0551	<97485>	.ADAPTER,CONNECTOR.....		EA		1	*	*	*		REF	137	20
P	F		9320-221-4387	481	<49944>	.RUBBER,SPECIAL-SHAPED..... SECTION		FT		AR	*	*	*		REF	137	21
P	F		5915-212-7970	10JX52	<56289>	.FILTER,RADIO INTERFERENCE... ATTACHING PARTS		EA		1	*	*	*		REF	137	22
			5305-180-0004	AN525-8R8	<88044>	.SCREW,MACHINE..... ---*---		HD		2	*	*	*		*	137	
			5305-558-8934	AN525D10R8	<88044>	.SCREW,MACHINE.....		HD		1	*	*	*		*	137	23
MF	F			S1655-61668-11	<78286>	.CABLE ASSEMBLY,FUEL SYSTEM.. MAKEFR AR 6145-851-8505 WIRE 1 EA 5935-578-2640 CONNECTOR 1 EA 5940-503-9995 TERMINAL		EA		1						137	24
P	F		5935-552-4822	163-0511-1	<97485>	..CONNECTOR,PLUG,ELECTRICAL..		EA		1	*	*	*		REF	137	25
P	F		5935-578-2640	1-907-1	<95712>	..CONNECTOR.....		EA		1						137	
			5940-503-9995	MS25036-1	<96906>	..TERMINAL,LUG.....		HD		1	*	*	*		*	137	26
X1				MD1932GN	<90484>	..WIRE.....		FT		1						137	
MF	F			S1655-61661-7	<78286>	.CABLE ASSEMBLY..... MAKEFR AR 6145-851-8505 WIRE 2 EA 5935-552-4822 CONNECTOR		EA		1						137	
P	F		5935-552-4822	163-0511-1	<97485>	..CONNECTOR,PLUG,ELECTRICAL..		EA		1	*	*	*		REF	137	
P	F		6145-851-8505	MS25190B20	<96906>	..WIRE,ELECTRICAL.....		FT		AR	*	REF	REF	REF	*	137	
MF	F			S1655-61668-7	<78286>	.CABLE ASSEMBLY,FUEL SYSTEM.. MAKEFR AR 6145-504-0362 WIRE 2 EA 5935-583-5970 CONNECTOR		EA		1						137	28

(1) SOURCE, MAINT AND REC CODE (a) SOURCE	(b) MAINT	(c) RECOVERY CODE	(2) FEDERAL STOCK NUMBER	REFERENCE NUMBER		(3) DESCRIPTION	MODELS USABLE ON CH-34C	(4) UNIT OF ISSUE	(5) QTY INC IN UNIT PACK	(6) QTY INC IN UNIT	(7) 30-DAY DS GS MAINT ALW (a) 1-20	(b) 21-50	(c) 51-100	(8) 1 YR ALW PER 100 EQUIP CNTGCY	(9) DEPOT MAINT ALW PER 100 EQUIP	(10) ILLUSTRATION (a) FIG NO	(b) ITEM NO
P	F		5935-552-4822	163-0511-1	<97485>	..CONNECTOR,PLUG,ELECTRICAL..		EA		2	*	*	*		REF	137	29
X1				1-317-1	<95712>	..PLUG,CONNECTOR.....		EA		2						137	
P	F		5935-553-2095	163-0551	<97485>	.ADAPTER,CONNECTOR.....		EA		1	*	*	*		REF	137	30
P	F		5935-552-6697	1-332-1	<95712>	.ADAPTER,CONNECTOR.....		EA		1	*	*	*		*	137	
P	F		5935-553-2602	1-333-1	<95712>	.ADAPTER,CONNECTOR.....		EA		1	*	*	*		*	137	
P	F		9320-221-4387	481	<49944>	.RUBBER,SPECIAL-SHAPED..... SECTION		FT		AR	*	*	*		REF	137	31
P	F		5915-212-7970	10JX52	<56289>	.FILTER,RADIO INTERFERENCE... ATTACHING PARTS		EA		1	*	*	*		REF	137	32
			5305-180-0004	AN525-8R8	<88044>	.SCREW,MACHINE.....		HD		2	*	*	*		*	137	
			5305-558-8934	AN525D10R8	<88044>	.SCREW,MACHINE.....		HD		1	*	*	*		*	137	33
						---*---											
MF	F			S1655-61668-9	<78286>	.CABLE ASSEMBLY,FUEL SYSTEM.. MAKEFR		EA		1						137	34
						AR 6145-504-0362 WIRE											
						1 EA 5935-583-5970 CONNECTOR											
						1 EA 5935-604-3244 CONNECTOR											
X1				1-317-1	<95712>	..PLUG,CONNECTOR.....		EA		1						137	
P	F		5935-604-3244	1-908-1	<95712>	..CONNECTOR PLUG.....		EA		1	2	2	3		*	137	
MF	F			S1655-61661-19	<78286>	.CABLE ASSEMBLY..... MAKEFR		EA		1						137	
						AR 6145-851-8505 WIRE											
						1 EA 5935-552-4822 CONNECTOR											
						1 EA 5940-503-9995 TERMINAL											
P	F		5935-018-5343	163-0512-3	<97485>	..CONNECTOR,PLUG,ELECTRICAL..		EA		2	*	*	*			137	
			5940-503-9995	MS25036-1	<96906>	..TERMINAL,LUG.....		HD		1	*	*	*		*	137	
			6145-851-8505	MS25190B20	<96906>	..WIRE,ELECTRICAL.....		FT		AR	*	REF	REF	REF	*	137	
MF	F			S1655-61668-10	<78286>	.CABLE ASSEMBLY,FUEL SYSTEM.. MAKEFR		EA		1						137	35
						AR 6145-851-8505 WIRE											
						1 EA 5935-578-2624 CONNECTOR											
						1 EA 5940-503-9995 TERMINAL											
P	F		5935-552-4822	163-0511-1	<97485>	..CONNECTOR,PLUG,ELECTRICAL..		EA		2	*	*	*		REF	137	36
P	F		5935-578-2640	1-907-1	<95712>	..CONNECTOR.....		EA		1						137	
MF	F			S1655-61661-2	<78286>	.CABLE ASSEMBLY..... MAKEFR		EA		1						137	
						AR 6145-851-8505 WIRE											
						1 EA 5935-018-5343 CONNECTOR											
						1 EA 5940-503-9995 TERMINAL											
P	F		5935-018-5347	163-0513-3	<97485>	..CONNECTOR,PLUG,ELECTRIC....		EA		1	*	*	*		REF	137	
			5940-503-9995	MS25036-1	<96906>	..TERMINAL,LUG.....		HD		1	*	*	*		*	137	
			6145-851-8505	MS25190B20	<96906>	..WIRE,ELECTRICAL.....		FT		AR	*	REF	REF	REF	*	137	
P	F		9320-221-4387	481	<49944>	.RUBBER,SPECIAL-SHAPED..... SECTION		FT		AR	*	*	*		REF	137	37
			5340-533-3512	EAB700-5	<81996>	.CLAMP,LOOP..... ATTACHING PARTS		EA		1	*	*	*		*	137	38
			5305-057-9612	MS24621-30	<96906>	.SCREW,MACHINE.....		HD		1	*	*	*		*	137	
						---*---											
P	F		5310-638-9469	A6264-8Z1	<78553>	.NUT,SHEET SPRING.....		EA		1	*	*	*		*	137	39
MF	O			397-3	<94640>	.COVER,TERMINAL BOARD..... MAKEFR		EA		1						137	40
						AR 5940-642-1381 TERM BOARD											

(1) SOURCE, MAINT AND REC CODE (a) SOURCE CODE	(b) MAINT LEVEL	(c) REC CODE	(2) FEDERAL STOCK NUMBER	REFERENCE NUMBER	(3) DESCRIPTION	MODELS USABLE ON CH-34C	(4) UNIT OF ISSUE	(5) QTY INC IN UNIT PACK	(6) QTY INC IN UNIT	(7) 30-DAY DS GS MAINT ALW (a) 1 20	(b) 21-50	(c) 51-100	(8) 1-YR ALW PER 100 EQUIP CNTGCY	(9) DEPOT MAINT ALW PER 100 EQUIP	(10) ILLUSTRATION (a) FIG NO	(b) ITEM NO
P	F		5920-892-9395	<81349>	.FUSEHOLDER-MIL-F-19207,..... TYPE FHN3IG		EA		1	*	*	*		*	137	
P	F		5920-557-2391	MS90077-3-1	<96906>	.FUSE,CARTRIDGE.....		EA		1	*	*	*		*	137	
			5935-820-0555	MS3106R14S5S	<96906>	.CONNECTOR,PLUG,ELECTRICAL... MAKEFR AR 5940-642-1381 TERM BOARD		EA		1	*	*	*		*	137	
MF	F			S1655-61661-5	<78286>	CABLE ASSEMBLY..... U/O TYPE ANAJ013 SYSTEM MAKEFR AR MILW12349-22AWG WIRE 2 EA 5935-552-4822 CONNECTOR		EA		1						137	
MF	F			S1655-61661-9	<78286>	CABLE ASSEMBLY..... U/O TYPE ANAJ013 SYSTEM MAKEFR AR MILW12349-22AWG WIRE 2 EA 5935-552-4822 CONNECTOR		EA		1						137	
MF	F			S1655-61661-13	<78286>	CABLE ASSEMBLY..... U/O TYPE ANAJ013 SYSTEM MAKEFR AR 6145-578-7514 WIRE 1 EA 5940-503-9995 TERMINAL 1 EA 5935-768-3864 CONNECTOR		EA		1						137	
MF	F			S1655-61661-20	<78286>	CABLE ASSEMBLY..... U/O TYPE ANAJ013 SYSTEM MAKEFR AR 6145-578-7514 WIRE 1 EA 5940-503-9995 TERMINAL 1 EA 5935-768-3864 CONNECTOR		EA		1						137	
MF	F			S1655-61661-22	<78286>	CABLE ASSEMBLY..... U/O TYPE ANAJ013 SYSTEM MAKEFR AR MILW-12349-KF22-7C-B2 2 EA 5935-552-4822 CONNECTOR		EA		1						137	
MF	F			S1655-61661-23	<78286>	CABLE ASSEMBLY..... U/O TYPE ANAJ013 SYSTEM MAKEFR AR MIL12349-22AWG WIRE 2 EA 5935-552-4822 CONNECTOR		EA		1						137	
				S1655-61600	<78286>	ELECTRONIC COMPARTMENT..... EQUIPMENT AND WIRING INSTALLATION USBL EFF 53-4475 THRU 56-4312 SEE FIG.128 FOR NHA										138	
				S1655-63015-1	<78286>	.LIGHT INSTALLATION.....				1						138	
P	O		6220-299-6693	AN3040-4B	<88044>	..LENS,AIRCRAFT..... NAVIGATIONAL LIGHT-GREEN		EA		1	*	*	*		*	138	1

(1) SOURCE, MAINT AND REC CODE (a) SOURCE CODE	(b) MAINT LEVEL	(c) REC CODE	(2) FEDERAL STOCK NUMBER	REFERENCE NUMBER		(3) DESCRIPTION	MODELS USABLE ON CH-34C	(4) UNIT OF ISSUE	(5) QTY INC IN UNIT PACK	(6) QTY INC IN UNIT	(7) 30-DAY DS/GS MAINT ALW (a) 1-20	(b) 21-50	(c) 51-100	(8) 1-YR ALW PER 100 EQUIP CNTGCY	(9) DEPOT MAINT ALW PER 100 EQUIP	(10) ILLUSTRATION (a) FIG NO	(b) ITEM NO
						CONTINUED										138	1
						ATTACHING PARTS											
				AN507C440-10	<88044>	..SCREW,MACHINE.....		EA		5						138	
			5310-550-5009	MS15795-704	<96906>	..WASHER,FLAT.....		HD		5	*	*	*		*	138	
			5310-088-0551	MS21044N04	<96906>	..NUT,SELF-LOCKING,HEXAGON...		EA		5	*	*	*		*	138	
						---*---											
P	O		6240-155-8714	MS25231-313	<96906>	..LAMP,INCANDESCENT.....		EA		1	REF	REF	REF		REF	138	
P	O		6220-299-4759	AN3030-9A	<88044>	..LIGHT,NAVIGATIONAL,AIRCRAFT		EA		1	*	*	*		*	138	2
P	O		6220-189-4797	AN3040-18	<88044>	..LENS,AIRCRAFT.....		EA		1	*	*	*		*	138	3
						NAVIGATIONAL LIGHT											
						GLASS,COLORLESS,CLEAR											
						ATTACHING PARTS											
				AN507C440-10	<88044>	..SCREW,MACHINE.....		EA		5	*	*	*		*	138	
			5310-550-5009	MS15795-704	<96906>	..WASHER,FLAT.....		HD		5	*	*	*		*	138	
			5310-088-0551	MS21044N04	<96906>	..NUT,SELF-LOCKING,HEXAGON...		EA		5	*	*	*		*	138	
						---*---											
P	O		6240-155-8714	MS25231-313	<96906>	..LAMP,INCANDESCENT.....		EA		1	REF	REF	REF		REF	138	
P	O		6220-299-4759	AN3030-9A	<88044>	..LIGHT,NAVIGATIONAL,AIRCRAFT		EA		1	*	*	*		REF	138	4
				S1655-61232	<78286>	.LIGHT INSTALLATION.....				1						138	
P	O		5930-259-4662	AN3209-1	<88044>	..SWITCH,SLIDE.....		EA		1	*	*	*		*	138	5
						ATTACHING PARTS											
			5305-889-3000	MS35206-230	<96906>	..SCREW,MACHINE.....		HD		2	*	*	*		*	138	
			5310-081-8087	MS21044N06	<96906>	..NUT,SELF-LOCKING,HEXAGON...		EA		2	*	*	*		*	138	
						---*---											
P	O		6220-299-7136	MS25358-1	<96906>	..LIGHT,DOME RPLS--.....		EA		1	REF	REF	REF		REF	138	6
						6220-299-7431,											
						6220-512-6648,											
						6220-836-1696,&											
						6220-875-6579											
						ATTACHING PARTS											
			5305-984-6193	MS35206-245	<96906>	..SCREW,MACHINE.....				4	*	*	*		*	138	
			5310-187-2398	AN960PD6L	<88044>	..WASHER,FLAT.....		HD		4	*	*	*		*	138	
			5310-526-0696	MS20364-632A	<96906>	..NUT,SELF-LOCKING,HEXAGON...		HD		4	*	*	*		*	138	
						---*---											
P	O		6240-155-7784	MS25232-307	<96906>	..LAMP,INCANDESCENT.....		EA		1	*	*	*		REF	138	
P	O		6240-155-7932	MS25235R311	<96906>	..LAMP,INCANDESCENT.....		EA		1	*	*	*		REF	138	
				S1655-61625	<78286>	.BOX INSTALLATION-JUNCTION...				1						138	
P	O		6125-669-5968	AN3533-1	<88044>	..MOTOR,GENERATOR.....		EA		1					REF	138	
						ATTACHING PARTS											
			5305-286-0213	AN525-832R10	<88044>	..SCREW,MACHINE.....		HD		4	*	*	*		*	138	
			5310-184-8966	AN960PD8	<88044>	..WASHER,FLAT.....		HD		4	*	*	*		*	138	
			5310-807-1466	MS21042-08	<96906>	..NUT,SELF-LOCKING,HEXAGON...				4	*	*	*		*	138	
						---*---											
P	F		1560-707-3323	S1655-61626-2	<78286>	...COVER,COMPASS.....		EA		1	*	*	*		*	138	7
X2	O			S1655-61626-1	<78286>	...BOX ASSEMBLY.....		EA		1						138	
			5940-600-6258	MS25226-2-2	<96906>	....LINK,TERMINAL,CONNECTING.		PG		1	*	*	*		*	138	8
P	O		5940-686-5100	MS25226-2-20	<96906>	....BUS BAR,TERMINAL.....		EA		1	*	*	*		*	138	9
				S1655-61622	<78286>	.CIRCUIT BREAKER INSTALLATION				1						138	
P	O		5925-173-7158	MS25017-5	<96906>	...CIRCUIT BREAKER.....		EA		2	*	*	*		REF	138	11
						ATTACHING PARTS											
			5305-855-6303	AN526DD632R6	<88044>	...SCREW,MACHINE.....		EA		4	*	*	*		*	138	
						---*---											

(1) SOURCE, MAINT AND REC CODE (a) SOURCE CODE	(b) MAINT LEVEL	(c) REC CODE	(2) FEDERAL STOCK NUMBER	(3) DESCRIPTION REFERENCE NUMBER			MODELS USABLE ON CH-34C	(4) UNIT OF ISSUE	(5) QTY INC IN UNIT PACK	(6) QTY INC IN UNIT	(7) 30-DAY DS GS MAINT ALW (a) 1 20	(b) 21-50	(c) 51-100	(8) 1-YR ALW PER 100 EQUIP CNTGCY	(9) DEPOT MAINT ALW PER 100 EQUIP	(10) ILLUSTRATION (a) FIG NO	(b) ITEM NO
X2	F			S1655-61614-3	<78286>	...BUS BAR.....		EA		1						138	12
				S1655-61610	<78286>	.BOX,JUNCTION-INSTALLATION...				1						138	
P	F		1560-570-0678	S1655-61612	<78286>	..COVER ASSEMBLY,JUNCTION BOX		EA		1	*	*	*		*	138	13
				S1655-61611	<78286>	..BOX ASSEMBLY,JUNCTION.....		EA		1						138	14
						ATTACHING PARTS											
			5306-182-2016	AN4H5A	<88044>	..BOLT,MACHINE.....		HD		4	*	*	*		*	138	15
			5310-187-2354	AN960PD416	<88044>	..WASHER,FLAT.....		HD		4	*	*	*		*	138	
						---*---											
P	F		6150-868-7026	S1655-61814-1	<78286>	...BUS BAR.....		EA		1	*	*	*		*	138	
			5325-290-1960	MS35489-27	<96906>	...GROMMET,RUBBER.....		EA		2	*	*	*		*	138	16
X2	F			S1655-61614-1	<78286>	...BAR,ELECTRICAL.....		EA		1						138	17
			5310-187-2413	AN961-616	<88044>	...WASHER,FLAT.....		HD		4	*	*	*		*	138	18
P	O		2925-555-5349	AN3025-300	<88044>	...CUTOUT RELAY,ENGINE.....		EA		1	*	REF	REF	REF	REF	138	19
						GENERATOR											
						ATTACHING PARTS											
			5305-989-7434	MS35207-263	<96906>	...SCREW,MACHINE.....				4	*	*	*		*	138	
			5310-183-4406	AN960PD10	<88044>	...WASHER,FLAT.....		HD		4	*	*	*		*	138	
						---*---											
X2	F			S1655-61614-2	<78286>	...BAR,ELECTRICAL.....		EA		1						138	20
			5945-660-9315	MS24171D1	<96906>	...RELAY,SOLENOID.....		EA		3	*	*	*		*	138	21
						ATTACHING PARTS											
			5306-275-9643	AN4DDH4A	<88044>	...BOLT,MACHINE.....		EA		2	*	*	*		*	138	
			5310-187-2354	AN960PD416	<88044>	...WASHER,FLAT.....		HD		2	*	*	*		*	138	
						---*---											
			5945-257-0316	MS24172D1	<96906>	...RELAY,SOLENOID.....		EA		1	*	*	*		*	138	22
						ATTACHING PARTS											
			5306-275-9643	AN4DDH4A	<88044>	...BOLT,MACHINE.....		EA		2	*	*	*		*	138	
			5310-187-2354	AN960PD416	<88044>	...WASHER,FLAT.....		HD		2	*	*	*		*	138	
						---*---											
				MS18029-1S7	<96906>	...COVER,TERMINAL BOARD.....		EA		1						138	23
			5935-549-4690	AN2552-3A	<88044>	...CONNECTOR,RECEPTACLE.....		EA		1	*	*	*		*	138	24
						ELECTRICAL											
						ATTACHING PARTS											
			5305-984-7351	MS35191-275	<96906>	...SCREW,MACHINE.....		GR		2	*	*	*		*	138	
			5310-167-0818	AN960-10	<88044>	...WASHER,FLAT.....		HD		2	*	*	*		*	138	
			5310-576-5752	MS35333-39	<96906>	...WASHER,LOCK.....		HD		2	*	*	*		*	138	
			5310-905-8434	MS21083B3	<96906>	...NUT,SELF-LOCKING,HEXAGON..		EA		2	*	*	*		*	138	
						---*---											
			5325-174-9038	MS35489-20	<96906>	...GROMMET,RUBBER.....		EA		1	*	*	*		*	138	25
			5325-276-6343	MS35489-23	<96906>	...GROMMET,RUBBER.....		EA		1	*	*	*		*	138	26
			5945-237-1348	AN3314-1	<88044>	...RELAY,ARMATURE.....		EA		1	*	*	*		*	138	27
						ATTACHING PARTS											
			5305-984-6193	MS35206-245	<96906>	...SCREW,MACHINE.....		HD		2	*	*	*		*	138	
			5310-184-8966	AN960PD8	<88044>	...WASHER,FLAT.....		HD		2	*	*	*		*	138	
						---*---											
P	O		5925-173-7158	MS25017-5	<96906>	...CIRCUIT BREAKER.....		EA		2	*	*	*		REF	138	28
						ATTACHING PARTS											
			5305-984-4988	MS35206-228	<96906>	...SCREW,MACHINE.....				2	*	*	*		*	138	
			5310-187-2398	AN960PD6L	<88044>	...WASHER,FLAT.....		HD		2	*	*	*		*	138	
						---*---											
X2	F			S1655-61217-3	<78286>	...NAME PLATE.....		EA		1						138	29
P	F		1560-532-2328	S1655-61613	<78286>	...JUNCTION BOX ASSEMBLY.....		EA		1	*	*	*		*	138	30

(1) SOURCE MAINT AND REC CODE (a) SOURCE CODE	(b) MAINT CODE	(c) REC CODE	(2) FEDERAL STOCK NUMBER	REFERENCE NUMBER	(3) DESCRIPTION	MODELS USABLE ON CH-34C	(4) UNIT OF ISSUE	(5) QTY INC IN UNIT PACK	(6) QTY INC IN UNIT	(7) 30-DAY DS GS MAINT ALW (a) 1-20	(b) 21-50	(c) 51-100	(8) 1 YR ALW PER 100 EQUIP CNTGCY	(9) DEPOT MAINT ALW PER 100 EQUIP	(10) ILLUSTRATION (a) FIG NO	(b) ITEM NO
					CONTINUED										138	30
					ELECTRICAL											
X1				S1655-61613-5	<78286> ....STIFFENER.....		EA		1						138	31
X1				S1655-61613-4	<78286> ....CLIP.....		EA		1						138	32
X1				S1655-61613-3	<78286> ....CHANNEL.....		EA		1						138	33
X1				S1655-61613-4	<78286> ....CLIP.....		EA		1						138	34
			2925-674-6979	S1655-61630	<78286> .REGULATOR INSTALLATION.....		EA		1	*	*	*			138	
					VOLTAGE											
P	O		1560-536-8106	S1655-61203	<78286> ..SHIELD ASSEMBLY,VOLTAGE....		EA		1	*	*	2		*	138	35
					REGULATOR											
			5325-141-7951	2600-12	<71286> ...STUD ASSEMBLY,TURNLOCK....		EA		2	*	*	*			138	36
					FASTENER											
P	O		6110-842-6376	E1597-2	<10001> ..REGULATOR,VOLTAGE.....		EA		1	*	*	*		*	138	37
					RPLS--											
			6110-256-3150	1042-17A	<06840> .REGULATOR,VOLTAGE.....										138	
					RPL-BY 6110-842-6376											
			6110-327-9825	GR28	<31435> .REGULATOR,VOLTAGE.....										138	
					RPL-BY 6110-842-6376											
					SEE FIG.139A FOR BREAKDOWN											
			6110-337-7975	CR2781M155D1	<24446> .REGULATOR,VOLTAGE.....										138	
					RPL-BY 6110-842-6376											
			6110-337-8037	A24A9170	<79500> .REGULATOR,VOLTAGE.....										138	
					RPL-BY 6110-842-6376											
					SEE FIG.138A FOR BREAKDOWN											
			6110-390-8104	1589-1B	<06840> .REGULATOR,VOLTAGE.....										138	
					RPL-BY 6110-842-6376											
					SEE FIG.138C FOR BREAKDOWN											
			6110-390-8115	CR2795B100A1	<24446> .REGULATOR,VOLTAGE.....										138	
					RPL-BY 6110-842-6376											
					SEE FIG.138B FOR BREAKDOWN											
			6110-512-6786	CR2795A100A1	<24445> .REGULATOR,VOLTAGE.....										138	
					RPL-BY 6110-842-6376											
		R	6110-631-4589	E1597-1	<10001> .REGULATOR,VOLTAGE.....										138	
					RPL-BY 6110-842-6376											
		R	6110-635-6316	CR2795E100A1	<24446> .REGULATOR VOLTAGE.....										138	
					RPL-BY 6110-842-6376											
					SEE FIG.138D FOR BREAKDOWN											
		R	6110-635-9636	1589-1D	<06840> .REGULATOR,VOLTAGE.....										138	
					RPL-BY 6110-842-6376											
					SEE FIG.138C FOR BREAKDOWN											
		R	6110-651-8883	1589-1C	<06840> .REGULATOR,VOLTAGE.....										138	
					RPL-BY 6110-842-6376											
					SEE FIG.138C FOR BREAKDOWN											
		R	6110-733-6003	1589-1C	<19315> .REGULATOR,VOLTAGE.....										138	
					RPL-BY 6110-842-6376											
					SEE FIG.138C FOR BREAKDOWN											
		R	6110-973-0416	AN3206-1	<88044> .REGULATOR,VOLTAGE.....										138	
					RPL-BY 6110-842-6376											
					INTRCH											
P	O	R	6110-373-8691	CR2795B105A1	<24446> .REGULATOR,VOLTAGE.....		EA		1						138	
					INTRCH 6110-842-6376											
			2925-626-7443	49C7573A	<35510> ..BASE,VOLTAGE REGULATOR.....										138	

(1) SOURCE, MAINT AND REC CODE (a) SOURCE CODE	(b) MAINT LEVEL	(c) REC CODE	(2) FEDERAL STOCK NUMBER	REFERENCE NUMBER	(3) DESCRIPTION	MODELS USABLE ON CH-34C	(4) UNIT OF ISSUE	(5) QTY INC IN UNIT PACK	(6) QTY INC IN UNIT	(7) 30-DAY DS GS MAINT ALW (a) 1-20	(b) 21-50	(c) 51-100	(8) 1-YR ALW PER 100 EQUIP CNTGCY	(9) DEPOT MAINT ALW PER 100 EQUIP	(10) ILLUSTRATION (a) FIG NO	(b) ITEM NO
					CONTINUED										138	
					RPL-BY 6110-483-8928											
P	O		6110-483-8928	40D8445-2 <80049>	..BASE,ASSEMBLY.....		EA		1	*	*	*		*	138	38
					RPLS-- 2925-626-7443											
					ATTACHING PARTS											
			5305-849-8055	AN525D10R12 <88044>	..SCREW,MACHINE.....		EA		4	*	*	*		*	138	
			5310-183-4406	AN960PD10 <88044>	..WASHER,FLAT.....		HD		8	*	*	*		*	138	
			5310-877-5797	MS21044N3 <96906>	..NUT,SELF-LOCKING,HEXAGON...		EA		4	*	*	*		*	138	
					---*---											
				S1655-61619 <78286>	.RELAY AND CONTROL UNIT.....				1						138	
					INSTALLATION											
			6340-093-8197	870729 <33525>	..CONTROL UNIT RPL-BY.....										138	
					5945-593-9849											
P	F		6340-593-9849	870729-05 <33525>	..CONTROL,ALARM RPLS--.....		EA		1	*	*	*		*	138	39
					6340-093-8197											
P	F		6340-373-3878	840542 <33525>	..BASE,MOUNTING.....		EA		1	*	*	2		*	138	40
					ATTACHING PARTS											
			5305-292-5923	AN525D832R12 <88044>	..SCREW,MACHINE.....		EA		4	*	*	*		*	138	
			5310-184-8966	AN960PD8 <88044>	..WASHER,FLAT.....		HD		8	*	*	*		*	138	
			5310-941-6440	MS21083D28 <96906>	..NUT,SELF-LOCKING,HEXAGON...				4	*	*	*		*	138	
					---*---											
P	O		5945-259-5569	840505 <33525>	..RELAY,ARMATURE.....		EA		1	*	*	*		*	138	41
AF	F			S1655-61221 <78286>	..BRACKET AND RECEPTACLE.....		EA		1						138	42
					ASSEMBLY											
					ATTACHING PARTS											
			5305-292-5923	AN525D832R12 <88044>	..SCREW,MACHINE.....		EA		4	*	*	*		*	138	
			5310-184-8966	AN960PD8 <88044>	..WASHER,FLAT.....		HD		4	*	*	*		*	138	
			5310-941-6440	MS21083D08 <96906>	..NUT,SELF-LOCKING,HEXAGON...				4	*	*	*		*	138	
					---*---											
				S1655-61616 <78286>	.FLASHER INSTALLATION.....				1						138	
P	O		5945-699-9797	A100H <77326>	..FLASHER,POSITION LIGHT.....		EA		1	*	*	*		*	138	43
					ATTACHING PARTS											
			5305-849-8055	AN525D10R12 <88044>	..SCREW,MACHINE.....		EA		4	*	*	*		*	138	
			5310-167-0753	AN960PD10L <88044>	..WASHER,FLAT.....		HD		8	*	*	*		*	138	
			5310-905-3081	MS21083D3 <96906>	..NUT,SELF-LOCKING,HEXAGON...				4	*	*	*		*	138	
					---*---											
P	O		5945-258-3257	650-4034 <71688>	.RELAY ASSEMBLY.....		EA		1	*	*	*		*	138	44
					ATTACHING PARTS											
			5305-849-8055	AN525D10R12 <88044>	.SCREW,MACHINE.....		EA		4	*	*	*		*	138	
			5310-167-0753	AN960PD10L <88044>	.WASHER,FLAT.....		HD		8	*	*	*		*	138	
			5310-905-3081	MS21083D3 <96906>	.NUT,SELF-LOCKING,HEXAGON....				4	*	*	*		*	138	
					---*---											
				S1655-61665 <78286>	.CONTROL UNIT INSTALLATION...				1						138	
					FUEL LEVEL											
P	F	R	6680-566-6662	2222-017-30 <97485>	..CONTROL UNIT,FUEL LEVEL....		EA		1	*	*	REF		REF	138	45
					ATTACHING PARTS											
			5305-993-1848	MS35207-265 <96906>	..SCREW,MACHINE.....		HD		4	*	*	*		*	138	
			5310-183-4406	AN960PD10 <88044>	..WASHER,FLAT.....		HD		8	*	*	*		*	138	
			5310-807-1467	MS21042-3 <96906>	..NUT,SELF-LOCKING,HEXAGON...				4	*	*	*		*	138	
					---*---											
P	D		6680-566-6664	2222-33-2 <83296>	...BRACKET ASSEMBLY.....		EA		1					REF	138	
P	D		6680-567-3559	2222-33-1 <83296>	...BRACKET.....		EA		1					REF	138	

(1) SOURCE, MAINT AND REC CODE (a) SOURCE CODE	(b) MAINT LEVEL	(c) REC CODE	(2) FEDERAL STOCK NUMBER	REFERENCE NUMBER		(3) DESCRIPTION	MODELS USABLE ON CH-34C	(4) UNIT OF ISSUE	(5) QTY INC IN UNIT PACK	(6) QTY INC IN UNIT	(7) 30-DAY DS/GS MAINT ALW (a) 1-20	(b) 21-50	(c) 51-100	(8) 1-YR ALW PER 100 EQUIP CNTGCY	(9) DEPOT MAINT ALW PER 100 EQUIP	(10) ILLUSTRATION (a) FIG NO	(b) ITEM NO
				S1655-61604-1	<78286>	.BATTERY INSTALLATION USBL..				1						138	46
						EFF 53-4475 THRU 56-4312											
						SEE FIG.140 FOR BREAKDOWN											
				S1655-61635	<78206>	.INVERTER INSTALLATION.....										138	
				S1655-61635	<78286>	.INVERTER INSTALLATION.....				1						138	
			5920-284-4153	413001	<75915>	..FUSE,CARTRIDGE.....										138	
						RPL-BY 5920-142-7433											
			5920-142-7433	MS90082-1	<96906>	..FUSE,CARTRIDGE.....		EA		1	*	*	*		*	138	47
						RPLS-- 5920-284-4153											
P	O		5920-156-4477	442001	<75915>	..FUSE HOLDER.....		EA		2	*	*	*		REF	138	
P	O	R	6125-557-7225	MS25173-1	<96906>	..MOTOR,GENERATOR.....		EA		2	2	2	4	43	*	138	48
						ATTACHING PARTS											
			5306-182-2060	AN3H7A	<88044>	..BOLT,MACHINE.....		HD		8	*	*	*		*	138	
			5306-182-2057	AN3H4A	<88044>	..BOLT,MACHINE.....		HD		8	*	*	*		*	138	
			5310-167-0753	AN960PD10L	<88044>	..WASHER,FLAT.....		HD		8	*	*	*		*	138	
						---*---											
P	O		5950-625-9456	9T39Y5	<24446>	..TRANSFORMER.....		EA		1	*	*	*		REF	138	49
						ATTACHING PARTS											
			5305-849-8055	AN525D10R12	<88044>	..SCREW,MACHINE.....		EA		2	*	*	*		*	138	
			5310-167-0753	AN960PD10L	<88044>	..WASHER,FLAT.....		HD		2	*	*	*		*	138	
			5310-905-3081	MS21083D3	<96906>	..NUT,SELF-LOCKING HEXAGON...				2	*	*	*		*	138	
						---*---											
			5945-257-0319	AN3324-1	<88044>	.RELAY,ARMATURE.....		EA		1	*	*	*		*	138	
						ATTACHING PARTS											
			5305-984-6211	MS35206-264	<96906>	.SCREW,MACHINE.....		HD		2	*	*	*		*	138	
			5310-183-4406	AN960PD10	<88044>	.WASHER,FLAT.....		HD		2	*	*	*		*	138	
			5310-807-1467	MS21042-3	<96906>	.NUT,SELF-LOCKING,HEXAGON....				2	*	*	*		*	138	
						---*---											
			5945-686-6877	MS24166D1	<96906>	.RELAY,SOLENOID.....		EA		1	*	*	*		*	138	51
						ATTACHING PARTS											
			5305-984-6208	MS35206-261	<96906>	.SCREW,MACHINE.....		HD		2	*	*	*		*	138	
			5310-183-4406	AN960PD10	<88044>	.WASHER,FLAT.....		HD		2	*	*	*		*	138	
			5310-807-1467	MS21042-3	<96906>	.NUT,SELF-LOCKING,HEXAGON....				2	*	*	*		*	138	
						---*---											
P	O		5945-257-0319	AN3324-1	<88044>	.RELAY,ARMATURE.....		EA		1	*	*	*		*	138	52
						ATTACHING PARTS											
			5305-984-6211	MS35206-264	<96906>	.SCREW,MACHINE.....				2	*	*	*		*	138	
			5310-183-4406	AN960PD10	<88044>	.WASHER,FLAT.....		HD		2	*	*	*		*	138	
			5310-807-1467	MS21042-3	<96906>	.NUT,SELF-LOCKING,HEXAGON....				2	*	*	*		*	138	
						---*---											
			5935-879-0138	MS3108R8S1S	<96906>	.CONNECTOR,PLUG-ELECTRICAL...		EA		1	*	*	*		*	138	53
				S1655-61632	<78286>	.LAMP INSTALLATION-FLOOD.....				1						138	
P	F		1560-673-0293	S1655-61633	<78286>	..RETAINER,FLOODLIGHT.....		EA		1	*	*	*		*	138	54
						ATTACHING PARTS											
			5305-984-6221	MS35206-234	<96906>	..SCREW,MACHINE.....				8	*	*	*		*	138	
			5310-188-7721	AN960PD6	<88044>	..WASHER,FLAT.....		HD		8	*	*	*		*	138	
						---*---											
			6240-196-4518	MS25243-4502	<96906>	..LAMP,INCANDESCENT.....		EA		1	*	*	*		*	138	55
P	F		1560-342-8923	S1655-61634-1	<78286>	..GASKET,CARGO,FLOODLIGHT....		EA		1	*	*	*		*	138	56
P	F		1560-342-8924	S1655-61634-2	<78286>	..GASKET,CARGO FLOODLIGHT....		EA		1	*	*	*		*	138	57
				S1655-61609	<78286>	.SHELF INSTALLATION.....				1						138	
X2	F		1560-567-5352	S1655-61609-1	<78286>	..SHELF ASSEMBLY,ELECTRONIC..		EA		1	*	*	*		*	138	58

(1) SOURCE, MAINT AND REC CODE (a) SOURCE CODE	(b) MAINT LEVEL	(c) REC CODE	(2) FEDERAL STOCK NUMBER	(3) DESCRIPTION REFERENCE NUMBER			MODELS USABLE ON CH-34C	(4) UNIT OF ISSUE	(5) QTY INC IN UNIT PACK	(6) QTY INC IN UNIT	(7) 30-DAY DS GS MAINT ALW (a) 1-20	(b) 21-50	(c) 51-100	(8) 1-YR ALWPER 100 EQUIP CNTGCY	(9) DEPOT MAINT ALWPER 100 EQUIP	(10) ILLUSTRATION (a) FIG NO	(b) ITEM NO
						CONTINUED										136	58
						COMPARTMENT											
P	F		5970-284-8468	8	<81349>	.INSULATION,SLEEVING.....		FT		AR	*	*	*		*	138	60
						ELECTRICAL											
				S1655-61618	<78286>	.RELAY INSTALLATION.....				1						138	
P	O		5945-258-2780	TD800	<74063>	..RELAY,ARMATURE.....		EA		1	*	*	*		*	138	62
						ATTACHING PARTS											
			5305-849-8055	AN525D10R12	<88044>	..SCREW,MACHINE.....		EA		3	*	*	*		*	138	
			5310-167-0753	AN960PD10L	<88044>	..WASHER,FLAT.....		HD		6	*	*	*		*	138	
			5310-905-3081	MS21083D3	<96906>	..NUT,SELF-LOCKING,HEXAGON...				3	*	*	*		*	138	
						---*---											
P	H		6110-765-8740	1104060	<83298>	KIT,REPAIR VOLTAGE.....		EA		1	*	*	*		*	138	
						REGULATOR <OVERHAUL> U/O											
						6110-256-3150 SEE											
						FUNCTIONAL GROUP 50											
						FOR COMPONENTS											
				S1655-61901	<78286>	ELECTRONIC COMPARTMENT.....										139	
						EQUIPMENT AND WIRING											
						INSTALLATION USBL EFF											
						56-4313 AND SUBSEQUENT											
						SEE FIG.128 FOR NHA											
				S1655-63015-1	<78286>	.LIGHTS INSTALLATION.....				1						139	
P	O		6220-299-6693	AN3040-4B	<88044>	..LENS,AIRCRAFT.....		EA		1	*	*	*		REF	139	1
						NAVIGATIONAL LIGHT-GREEN											
						ATTACHING PARTS											
				AN507C440-10	<88044>	..SCREW.....		EA		5						139	
			5310-550-5009	MS15795-704	<96906>	..WASHER,FLAT.....		HD		5	*	*	*		*	139	
			5310-088-0551	MS21044N04	<96906>	..NUT,SELF-LOCKING,HEXAGON...		EA		5	*	*	*		*	139	
						---*---											
P	O		6240-155-8714	MS25231-313	<96906>	..LAMP,INCANDESCENT.....		EA		1	REF	REF	REF		REF	139	
P	O		6220-299-4759	AN3030-9A	<88044>	..LIGHT,NAVIGATIONAL,AIRCRAFT		EA		1	*	*	*		REF	139	2
P	O		6220-189-4797	AN3040-1B	<88044>	..LENS,AIRCRAFT.....		EA		1	*	*	*		REF	139	3
						NAVIGATIONAL LIGHT-CLEAR											
						ATTACHING PARTS											
				AN507C440-10	<88044>	..SCREW.....		EA		5						139	
			5310-550-5009	MS15795-704	<96906>	..WASHER,FLAT.....		HD		5	*	*	*		*	139	
			5310-088-0551	MS21044N04	<96906>	..NUT,SELF-LOCKING,HEXAGON...		EA		5	*	*	*		*	139	
						---*---											
P	O		6240-155-8714	MS25231-313	<96906>	..LAMP,INCANDESCENT.....		EA		1	REF	REF	REF		REF	139	
P	O		6220-299-4759	AN3030-9A	<88044>	..LIGHT,NAVIGATIONAL,AIRCRAFT		EA		1	*	*	*		REF	139	4
				S1655-61232	<78286>	.LIGHT INSTALLATION.....				1						139	
P	O		5930-259-4662	AN3209-1	<88044>	..SWITCH,SLIDE.....		EA		1	*	*	*		REF	139	5
						ATTACHING PARTS											
			5305-889-3000	MS35206-230	<96906>	..SCREW,MACHINE.....		HD		1	*	*	*		*	139	
			5310-081-8087	MS21044N06	<96906>	..NUT,SELF-LOCKING,HEXAGON...		EA		2	*	*	*		*	139	
						---*---											

(1) SOURCE, MAINT AND REC CODE (a) SOURCE CODE	(b) MAINT LEVEL	(c) REC FOLL	(2) FEDERAL STOCK NUMBER	REFERENCE NUMBER		(3) DESCRIPTION	MODELS USABLE ON CH-34C	(4) UNIT OF ISSUE	(5) QTY INC IN UNIT PACK	(6) QTY INC IN UNIT	(7) 30-DAY DS/GS MAINT ALW (a) 1-20	(b) 21-50	(c) 51-100	(8) 1-YR ALW PER 100 EQUIP CONTGCY	(9) DEPOT MAINT ALW PER 100 EQUIP	(10) ILLUSTRATION (a) FIG NO	(b) ITEM NO
P	O		6220-299-7136	MS25358-1	<96906>	..LIGHT,DOME RPLS--		EA		1	REF	REF	REF		REF	139	6
						6220-299-7431,											
						6220-512-6648,											
						6220-836-1696,&											
						6220-875-6579											
						ATTACHING PARTS											
			5305-889-3000	MS35206-230	<96906>	..SCREW,MACHINE		HD		4	*	*	*		*	139	
			5310-187-2398	AN960PD6L	<88044>	..WASHER,FLAT		HD		4	*	*	*		*	139	
			5310-081-8087	MS21044N06	<96906>	..NUT,SELF-LOCKING,HEXAGON		EA		4	*	*	*		*	139	
						---*---											
P	O		6240-155-7784	MS25232-307	<96906>	..LAMP,INCANDESCENT		EA		1	*	*	*		REF	139	
P	O		6240-155-7932	MS25235R311	<96906>	..LAMP,INCANDESCENT		EA		1	*	*	*		REF	139	
				S1655-61625-1	<78286>	.BOX INSTALLATION-JUNCTION				1						139	
						J-2 COMPASS											
X2	O			S1655-61626-1	<78286>	..BOX ASSEMBLY-JUNCTION J-2		EA		1						139	8
						COMPASS											
						ATTACHING PARTS											
			5305-286-0213	AN525-832R10	<88044>	..SCREW,MACHINE		HD		4	*	*	*		*	139	9
			5310-184-8966	AN960PD8	<88044>	..WASHER,FLAT		HD		8	*	*	*		*	139	
			5310-807-1466	MS21042-08	<96906>	..NUT,SELF-LOCKING,HEXAGON				4	*	*	*		*	139	
						---*---											
P	F		1560-707-3323	S1655-61626-2	<78286>	...COVER COMPASS		EA		1	*	*	*		REF	139	10
				S1655-61626-5	<78286>	...BOX ASSEMBLY		EA		1						139	
				AN3436-2-12	<88044>	....TERMINAL BOARD		EA		1						139	11
						ATTACHING PARTS											
			5305-889-2999	MS35206-217	<96906>	....SCREW,MACHINE		HD		2	*	*	*		*	139	
			5310-550-5009	MS15795-704	<96906>	....WASHER,FLAT		HD		2	*	*	*		*	139	
			5310-088-0551	MS21044N04	<96906>	....NUT,SELF-LOCKING,HEXAGON		EA		2	*	*	*		*	139	
						---*---											
			5940-600-6258	MS25226-2-2	<96906>	....LINK,TERMINAL,CONNECTING		PG		1	*	*	*		*	139	12
			5940-623-7228	MS25226-2-5	<96906>	....LINK,TERMINAL		EA		1	*	*	*		*	139	13
			5940-600-6258	MS25226-2-2	<96906>	....LINK,TERMINAL,CONNECTING		PG		1	*	*	*		*	139	15
			5940-950-1610	MS27212-1-20	<96906>	....TERMINAL BOARD ASSEMBLY		EA		1	*	*	*			139	16
						ATTACHING PARTS											
			5305-889-2997	MS35206-215	<96906>	....SCREW,MACHINE		HD		2	*	*	*		*	139	
			5310-550-5009	MS15795-704	<88044>	....WASHER,FLAT		HD		2	*	*	*		*	139	
			5310-088-0551	MS21044N04	<96906>	....NUT,SELF-LOCKING,HEXAGON		EA		2	*	*	*		*	139	
						---*---											
X2	F			S1655-61626-4	<78286>	....BOX		EA		1						139	22
P	F		2925-841-0187	S1655-61928	<78286>	.SHIELD ASSEMBLY-VOLTAGE		EA		1	*	*	*			139	23
						REGULATOR,DC-RIVETED											
P	F		5325-282-0624	2600-3	<71286>	..STUD ASSEMBLY,TURNLOCK		EA		2	*	*	*		REF	139	24
						FASTENER											
P	F		5310-781-2804	2600LW	<71286>	..WASHER		EA		2	*	*	*		REF	139	
P	F		5325-584-0024	2600-2S	<71286>	..STUD ASSEMBLY,TURNLOCK		EA		4	*	*	*		REF	139	25
						FASTENER											
X2	F		5310-781-2804	2600LW	<71286>	..WASHER		EA		4	*	*	*		REF	139	
				S1655-61928-5	<78286>	..BRACKET-ANGLE		EA		2						139	26
						ATTACHING PARTS											
				MS20470AD4	<96906>	..RIVET		EA		2						139	27
			5310-515-9371	AN960PD3	<88044>	..WASHER,FLAT		HD		2	*	*	*		*	139	
						---*---											

(1) SOURCE MAINT AND REC CODE (a) SOURCE CODE	(b) MAINT LEVEL	(c) REC CODE	(2) FEDERAL STOCK NUMBER	REFERENCE NUMBER		(3) DESCRIPTION	MODELS USABLE ON CH-34C	(4) UNIT OF ISSUE	(5) QTY INC IN UNIT PACK	(6) QTY INC IN UNIT	(7) 30-DAY DS GS MAINT ALW (a) 1-20	(b) 21-50	(c) 51-100	(8) 1-YR ALW PER 100 EQUIP CNTGCY	(9) DEPOT MAINT ALW PER 100 EQUIP	(10) ILLUSTRATION (a) FIG NO	(b) ITEM NO
P	O		6110-613-9919	S1655-61928-4	<78286>	..SHIELD ASSEMBLY,VOLTAGE.... REGULATOR		EA		1	*	*	*		*	139	28
				S1655-61906	<78286>	.REGULATOR INSTALLATION-DC V.				1						139	
P	O		6110-842-6376	E1597-2	<10001>	..REGULATOR,VOLTAGE..... RPLS--		EA		1	*	*	*		REF	139	29
			6110-256-3150	1042-17A	<06840>	.REGULATOR,VOLTAGE..... RPL-BY 6110-842-6376										139	
			6110-327-9825	GR28	<31435>	.REGULATOR,VOLTAGE..... RPL-BY 6110-842-6376 SEE FIG.139A FOR BREAKDOWN										139	
			6110-337-7975	CR2781M155D1	<24446>	.REGULATOR,VOLTAGE..... RPL-BY 6110-842-6376										139	
			6110-337-8037	A24A9170	<79500>	.REGULATOR,VOLTAGE..... RPL-BY 6110-842-6376 SEE FIG.138A FOR BREAKDOWN										139	
			6110-390-8104	1589-1B	<06840>	.REGULATOR,VOLTAGE..... RPL-BY 6110-842-6376 SEE FIG.138C FOR BREAKDOWN										139	
			6110-390-8115	CR2795B100A1	<24446>	.REGULATOR,VOLTAGE..... RPL-BY 6110-842-6376 SEE FIG.138B FOR BREAKDOWN										139	
			6110-512-6786	CR2795A100A1	<24445>	.REGULATOR,VOLTAGE..... RPL-BY 6110-842-6376										139	
		R	6110-631-4589	E1597-1	<10001>	.REGULATOR,VOLTAGE..... RPL-BY 6110-842-6376										139	
		R	6110-635-6316	CR2795E100A1	<24446>	.REGULATOR,VOLTAGE..... RPL-BY 6110-842-6376 SEE FIG.138D FOR BREAKDOWN										139	
		R	6110-635-9636	1589-1D	<06840>	.REGULATOR,VOLTAGE..... RPL-BY 6110-842-6376 SEE FIG.138C FOR BREAKDOWN										139	
		R	6110-651-8883	1589-1C	<06840>	.REGULATOR,VOLTAGE..... RPL-BY 6110-842-6376 SEE FIG.138C FOR BREAKDOWN										139	
		R	6110-733-6003	1589-1C	<19315>	.REGULATOR,VOLTAGE..... RPL-BY 6110-842-6376 SEE FIG.138C FOR BREAKDOWN										139	
		R	6110-973-0416	AN3206-1	<88044>	.REGULATOR,VOLTAGE..... RPL-BY 6110-842-6376 INTRCH										139	
P	O	R	6110-373-8691	CR2795B105A1	<24446>	.REGULATOR,VOLTAGE..... INTRCH 6110-842-6376		EA		1						139	
P	O		6110-099-0114	AN3204-2	<88044>	..BASE ASSEMBLY.....		EA		1					REF	139	30
				S1655-61929	<78286>	.RELAY AND CONTROL UNIT..... INSTALLATION				1						139	
P	F		6340-593-9849	870729-05	<33525>	..CONTROL,ALARM RPLS--..... 6340-093-8197		EA		1	*	*	*		REF	139	31
P	F		6340-373-3878	840542	<33525>	..BASE,MOUNTING..... ATTACHING PARTS		EA		1	*	*	REF		*	139	32
			5305-079-1159	AN526DD832R8	<88044>	..SCREW,MACHINE.....		HD		4	*	*	*		*	139	
			5310-184-8966	AN960PD8	<88044>	..WASHER,FLAT.....		HD		4	*	*	*		*	139	
			5310-060-2039	MS21044D08	<96906>	..NUT,SELF-LOCKING,HEXAGON...		EA		4	*	*	*		*	139	

(1) SOURCE, MAINT AND REC CODE (a) SOURCE CODE	(b) MAINT LEVEL	(c) REC CODE	(2) FEDERAL STOCK NUMBER	REFERENCE NUMBER	(3) DESCRIPTION	MODELS USABLE ON CH-34C	(4) UNIT OF ISSUE	(5) QTY INC IN UNIT PACK	(6) QTY INC IN UNIT	(7) 30-DAY DS GS MAINT ALW (a) 1-20	(b) 21-50	(c) 51-100	(8) 1-YR ALW PER 100 EQUIP CNTGCY	(9) DEPOT MAINT ALW PER 100 EQUIP	(10) ILLUSTRATION (a) FIG NO	(b) ITEM NO
					CONTINUED										139	
					---*---											
P	F		5945-259-5569	840505 <33525>	..RELAY,ARMATURE.....		EA		1	*	*	*		*	139	33
AF	F			S1655-61221 <78286>	..BRACKET AND RECEPTACLE.....		EA		1						139	34
					ASSEMBLY											
					ATTACHING PARTS											
			5305-844-3572	AN525D832R8 <88044>	..SCREW,MACHINE.....		EA		4	*	*	*		*	139	
			5310-184-8966	AN960PD8 <88044>	..WASHER,FLAT.....		HD		4	*	*	*		*	139	
			5310-941-6440	MS21083D08 <96906>	..NUT,SELF-LOCKING,HEXAGON...				4	*	*	*		*	139	
					---*---											
				S1655-61922 <78286>	.FLASHER INSTALLATION.....				1						139	
					NAVIGATION LIGHTS											
P	O		5945-699-9797	A100H <77326>	..FLASHER,POSITION LIGHT.....		EA		1	*	*	*		REF	139	35
					AIRCRAFT											
					ATTACHING PARTS											
			5305-558-8934	AN525D10R8 <88044>	..SCREW,MACHINE.....		HD		4	*	*	*		*	139	
			5310-183-4406	AN960PD10 <88044>	..WASHER,FLAT.....		HD		4	*	*	*		*	139	
			5310-905-3081	MS21083D3 <96906>	..NUT,SELF-LOCKING,HEXAGON...				4	*	*	*		*	139	
					---*---											
				S1655-61632 <78286>	.LIGHT INSTALLATION-FLOOD....				1						139	36
P	F		1560-673-0293	S1655-61633 <78286>	..RETAINER,FLOOD LIGHT.....		EA		1	*	*	*		REF	139	37
					ATTACHING PARTS											
			5305-598-6221	MS35206-234 <96906>	..SCREW,MACHINE.....				8	*	*	*		*	139	38
			5310-188-7721	AN960PD6 <88044>	..WASHER,FLAT.....		HD		8	*	*	*		*	139	
					---*---											
P	O		6240-196-4518	MS25243-4502 <96906>	..LAMP,INCANDESCENT.....		EA		1	*	*	*		REF	139	39
P	F		1560-342-8923	S1655-61634-1 <78286>	..GASKET,CARGO FLOOD LIGHT...		EA		1	*	*	*		REF	139	40
P	F		1560-342-8924	S1655-61634-2 <78286>	..GASKET,CARGO FLOOD LIGHT...		EA		1	*	*	*		REF	139	41
MF	O			MS18029-1S15 <96906>	.COVER,TERMINAL BOARD...		EA		1						139	42
					MAKEFR											
					AR 5940-907-5939 TERM BOARD											
			5935-849-4268	MS3106R8S1S <96906>	.CONNECTOR,PLUG,ELECTRICAL...		EA		1	*	*	*		*	139	46
			5945-257-0319	AN3324-1 <88044>	.RELAY,ARMATURE.....		EA		2	*	*	*		*	139	47
					ATTACHING PARTS											
			5305-984-6211	MS35206-264 <96906>	.SCREW,MACHINE.....		HD		2	*	*	*		*	139	
			5310-183-4406	AN960PD10 <88044>	.WASHER,FLAT.....		HD		2	*	*	*		*	139	
			5310-807-1467	MS21042-3 <96906>	.NUT,SELF-LOCKING,HEXAGON....				2	*	*	*		*	139	
					---*---											
			5945-686-6877	MS24166D1 <96906>	.RELAY,SOLENOID.....		EA		1	*	*	*		*	139	48
					ATTACHING PARTS											
			5305-984-6208	MS35206-261 <96906>	.SCREW,MACHINE.....		HD		2	*	*	*		*	139	
			5310-183-4406	AN960PD10 <88044>	.WASHER,FLAT.....		HD		2	*	*	*		*	139	
			5310-807-1467	MS21042-3 <96906>	.NUT,SELF-LOCKING,HEXAGON....				2	*	*	*		*	139	
					---*---											
P	F		5970-284-8468	[illegible] <81349>	.INSULATION,SLEEVING.....		FT		AR	*	*	*		*	139	51
					ELECTRICAL											
				S1660-65100 <78286>	.ANTENNA INSTALLATION.....				1						139	
P	F		1680-476-1396	1338-90C <07166>	.FILTER,AIRCRAFT.....		EA		1	*	*	*		*	139	
P	H		1560-072-8306	S1645-61703-1 <78286>	.SUPPORT PLATE.....		EA		1	*	*	*		*	139	
P	H		1560-072-8305	S1645-61704-2 <78286>	.TUBE ASSEMBLY.....		EA		1	*	*	*		*	139	
P	H		1560-072-8304	S1645-61817-10 <78286>	.TUBE ASSEMBLY.....		EA		1	*	*	*		*	139	
P	H		1560-072-8303	S1645-61817-11 <78286>	.TUBE ASSEMBLY.....		EA		1	*	*	*		*	139	

(1) SOURCE, MAINT AND REC CODE (a) SOURCE CODE	(b) MAINT LEVEL	(c) REC CODE	(2) FEDERAL STOCK NUMBER	REFERENCE NUMBER		(3) DESCRIPTION	MODELS USABLE ON CH-34C	(4) UNIT OF ISSUE	(5) QTY INC IN UNIT PACK	(6) QTY INC IN UNIT	(7) 30-DAY DS 'GS MAINT ALW (a) 1-20	(b) 21-50	(c) 51-100	(8) 1-YR ALW PER 100 EQUIP CNTGCY	(9) DEPOT MAINT ALW PER 100 EQUIP	(10) ILLUSTRATION (a) FIG NO	(b) ITEM NO
MF	F			SS4016-1-19	<78286>	.RESTRICTOR ASSEMBLY..... MAKEFR 1 EA 4730-834-9560 NIPPLE 1 EA 5305-954-4617 SCREW		EA		1						139	
P	O		4440-476-1460	1338-91C	<07166>	CARTRIDGE AND DEW POINT..... INDICATOR KIT U/O 1680-476-1396 SEE FUNCTIONAL GROUP 50 FOR COMPONENTS		EA		1	2	2	4		*	139	
P	H		6110-765-8740	1104060	<83298>	KIT,REPAIR VOLTAGE..... REGULATOR-OVERHAUL U/O 6110-256-3150 SEE FUNCTIONAL GROUP 50 FOR COMPONENTS		EA		1	*	*	*		REF	139	
				S1655-61604-1	<78286>	BATTERY INSTALLATION USBL... EFF 53-4475 THRU 56-4312 SEE FIG.138 FOR NHA										140	
P	O		1560-570-0676	S1655-61608-3	<78286>	.TUBE,BATTERY,VENT.....		EA		1	*	*	2		*	140	1
P	O		6140-308-1315	9555A	<74144>	.VENT TUBE,BATTERY.....		EA		1	*	*	*		*	140	2
MF	F			AN743-12	<88044>	.BRACKET,ANGLE..... MAKEFR AR 9535-232-0378 AL ALLY SH ATTACHING PARTS		EA		1						140	3
			5305-984-6193	MS35206-245	<96906>	.SCREW,MACHINE.....		HD		1	*	*	*		*	140	4
			5310-184-8966	AN960PD8	<88044>	.WASHER,FLAT.....		HD		1	*	*	*		*	140	
			5310-811-3494	MS21044N08	<96906>	.NUT,SELF-LOCKING,HEXAGON.... ---*---		EA		1	*	*	*		*	140	
P	O		1560-613-9660	S1655-61909-1	<78286>	.TUBE,BATTERY VENT.....		EA		1	2	2	4		*	140	5
P	O		6140-681-8562	S1655-61608-8	<78286>	.VENT,TUBE,BATTERY.....		EA		1	*	*	*		*	140	
P	O		1560-570-0677	S1655-61608-4	<78286>	.TUBE ASSEMBLY,BATTERY VENT..		EA		1	*	*	*		*	140	6
P	O		6140-308-1315	9555A	<74144>	.VENT TUBE,BATTERY.....		EA		1	*	*	*		REF	140	7
AF	O			S1655-61606	<78286>	.PLUG ASSEMBLY,BATTERY.....		EA		1						140	8
			5940-194-4199	MS25021-14	<96906>	..TERMINAL LUG.....		EA		1	*	*	*		*	140	
			5940-892-3111	MS25435-15	<96906>	..TERMINAL LUG.....		EA		1	*	2	2		*	140	
P	O		5935-257-8321	11751-1	<71468>	..CONNECTOR,PLUG,ELECTRIC....		EA		1	*	*	*		*	140	
			6145-578-6596	MS25190B2	<96906>	..WIRE,ELECTRICAL.....		FT		AR	*	*	*		*	140	
P	F		5970-235-2728	8034658-23	<18876>	..INSULATION SLEEVING.....		FT		AR	*	*	*		*	140	
AF	O			S1655-61207	<78286>	.ROD ASSEMBLY,ELECTRICAL..... ATTACHING PARTS		EA		2						140	
			5315-812-3759	MS20392-2C11	<96906>	.PIN,STRAIGHT,HEADLESS.....		EA		1	*	*	*		*	140	9
			5310-167-0753	AN960PD10L	<88044>	.WASHER,FLAT.....		HD		1	*	*	*		*	140	
			5315-234-1856	MS24665-155	<96906>	.PIN,COTTER..... ---*---		HD		1	*	*	*		*	140	
P	O		5340-531-6884	S1655-61207-2	<78286>	..ROD END,EXTERNALLY THREADED ATTACHING PARTS		EA		1	*	2	2		*	140	10
			5315-811-1265	MS20392-1C15	<96906>	..PIN,STRAIGHT,HEADED.....		EA		1	*	*	*		*	140	11

(1) SOURCE, MAINT AND REC CODE (a) SOURCE CODE	(b) MAINT CODE	(c) REC CODE	(2) FEDERAL STOCK NUMBER	REFERENCE NUMBER		(3) DESCRIPTION	MODELS USABLE ON CH-34C	(4) UNIT OF ISSUE	(5) QTY INC IN UNIT PACK	(6) QTY INC IN UNIT	(7) 30-DAY DS/GS MAINT ALW (a) 1-20	(b) 21-50	(c) 51-100	(8) 1-YR ALW PER 100 EQUIP CNTGCY	(9) DEPOT MAINT ALW PER 100 EQUIP	(10) ILLUSTRATION (a) FIG NO	(b) ITEM NO
			5310-188-7721	AN960PD6	<88044>	..WASHER,FLAT.....		HD		1	*	*	*		*	140	
			5315-234-1856	MS24665-155	<96906>	..PIN,COTTER.....		HD		1	*	*	*		*	140	
						---*---											
P	F		1560-565-8500	S1655-61207-1	<78286>	..WELD ASSEMBLY,BATTERY..... TIE DOWN ROD		EA		1	*	*	2		*	140	12
			5306-638-2214	AN4283	<88044>	.BOLT,EYE.....		EA		2	*	*	*		*	140	13
			6140-321-2281	AN3156-3	<88044>	.CLAMP,BATTERY HOLD DOWN.....		EA		2	*	*	*		*	140	14
AD	O			S1655-61605	<78286>	.BATTERY ASSEMBLY,ELECTRICAL.		EA		1						140	15
P	F		5935-888-7405	CA011749-0001	<71468>	..CONNECTOR,RECEPTACLE..... ELECTRICAL		EA		1	*	*	*		*	140	16
P	O		6140-248-6148	AN3150-2	<88044>	..BATTERY,STORAGE-24 V,36.... AMP HR		EA		1	*	*	*		*	140	17
P	O		6140-333-8979	M3253-2	<81864>	.LID-BATTERY SUMP.....		EA		1	*	*	*		*	140	18
P	O		6140-345-9636	S10-55-3013	<78286>	.PAD,BATTERY DRAIN SUMP.....		EA		1	*	*	*		*	140	19
						.JAR.....		EA		1						140	20
AF	F			S1655-61607-1	<78286>	.SUPPORT ASSEMBLY..... ATTACHING PARTS		EA		1						140	21
			5305-282-5546	AN525-8R18	<88044>	.SCREW,MACHINE.....		EA		6	*	*	*		*	140	22
			5310-184-8966	AN960PD8	<88044>	.WASHER,FLAT.....		HD		6	*	*	*		*	140	
						---*---											
MF	F			S1655-61607-2	<78286>	..SUPPORT..... MAKEFR		EA		1						140	25
						AR 9535-167-2267 AL ALLY SH											
MF	F			S1655-61607-5	<78286>	.GASKET..... MAKEFR		EA		1						140	26
						AR 5330-182-1326 GASKET											
				S1655-61615	<78286>	.SUPPORT ASSEMBLY.....CODE B		EA		1						140	27
			5305-576-7810	CA011749-0001	<88044>	.SCREW,MACHINE.....		EA		1	*	*	*		*	140	29
			5310-183-4406	AN960PD10	<88044>	.WASHER,FLAT.....		HD		1	*	*	*		*	140	
			5310-877-5797	MS21044N3	<96906>	.NUT,SELF-LOCKING,HEXAGON....		EA		1	*	*	*		*	140	
						---*---											
				S1655-61615-2	<78286>	..ANGLE.....		EA		1						140	30
P	O		5340-313-6846	A5934-51	<78553>	..CLAMP ASSEMBLY,BATTERY..... OVERFLOW		EA		1	*	*	*		*	140	34
P	O		5340-313-6846	A5934-51	<78553>	..CLAMP ASSEMBLY,BATTERY..... OVERFLOW		EA		1	*	*	*		REF	140	40
P	F		1560-653-0001	S1655-61209-1	<78286>	.SUPPORT,ELECTRICAL,BATTERY.. ATTACHING PARTS		EA		2	2	3	5		*	140	41
			5305-688-2342	N80P16018C6	<02342>	.SCREW,MACHINE.....		EA		2	*	*	*		*	140	42
			5310-183-4406	AN960PD10	<88044>	.WASHER,FLAT.....		HD		2	*	*	*		*	140	
						---*---											
				S1655-61228-1	<78286>	.SUPPORT INSTALLATION.....				1						140	
P	F		1560-446-6391	S1655-61228-4	<78286>	..SUPPORT ASSEMBLY..... CODE A USBL EFF 53-4475 THRU 55-4488 CODE B USBL EFF 55-4489 THRU 56-4312		EA		1	*	*	*		*	140	45

(1) SOURCE, MAINT AND REC CODE (a) SOURCE CODE	(b) MAINT LEVEL	(c) REC CODE	(2) FEDERAL STOCK NUMBER	(3) DESCRIPTION REFERENCE NUMBER			MODELS USABLE ON CH-34C	(4) UNIT OF ISSUE	(5) QTY INC IN UNIT PACK	(6) QTY INC IN UNIT	(7) 30-DAY DS GS MAINT ALW (a) 1-20	(b) 21-50	(c) 51-100	(8) 1-YR ALW PER 100 EQUIP CNTGCY	(9) DEPOT MAINT ALW PER 100 EQUIP	(10) ILLUSTRATION (a) FIG NO	(b) ITEM NO
				S1655-61910	<78286>	BATTERY INSTALLATION USBL... EFF 56-4313 & SUBSEQUENT SEE FIG.132 FOR NHA										141	
			6140-621-0173	S1655-66113-1	<78286>	.VENT,TUBE BATTERY RPL-BY... 6140-681-8562										141	
P	O		6140-681-8562	S1655-61608-8	<78286>	.VENT,TUBE BATTERY RPLS--... 6140-621-0173		EA		1	*	*	*		*	141	1
P	O		1560-613-9660	S1655-61909-1	<78286>	.TUBE,BATTERY VENT.....		EA		1	REF	REF	REF		REF	141	2
P	O		1560-613-9661	S1655-61909-2	<78286>	.TUBE,BATTERY VENT.....		EA		1	2	2	3		*	141	3
P	O		6140-308-1315	9555A	<74144>	.VENT TUBE,BATTERY.....		EA		2	*	*	*		REF	141	4
AO	O			S1655-61912	<78286>	.PLUG ASSEMBLY.....		EA		1						141	5
P	O		5935-257-8321	11751-1	<71468>	..CONNECTOR,PLUG,ELECTRICAL..		EA		1	*	*	*		*	141	6
P	O		5995-769-3462	S1655-61912-1	<78286>	..LEAD,ELECTRICAL.....		EA		1	*	*	*		*	141	7
P	O		5995-769-3461	S1655-61912-2	<78286>	..LEAD,ELECTRICAL.....		EA		1	*	*	*		*	141	9
AF	F			S1655-61711-1	<78286>	.BATTERY AND SHELF ASSEMBLY..		EA		1						141	11
AF	O			S1655-61207	<78286>	..ROD ASSEMBLY,ELECTRICAL.... ATTACHING PARTS		EA		1						141	12
			5315-812-3759	MS20392-2C11	<96906>	..PIN,STRAIGHT,HEADED.....		EA		1	*	*	*		*	141	13
			5310-167-0753	AN960PD10L	<88044>	..WASHER,FLAT.....		HD		1	*	*	*		*	141	
			5315-234-1856	MS24665-155	<96906>	..PIN,COTTER.....		HD		1	*	*	*		*	141	
						---*---											
P	O		5340-531-6884	S1655-61207-2	<78286>	...ROD END,EXTERNALLY..... THREADED ATTACHING PARTS		EA		1	*	REF	REF		REF	141	14
			5315-811-1265	MS20392-1C15	<96906>	...PIN,STRAIGHT,HEADED.....		EA		1	*	*	*		*	141	15
			5310-188-7721	AN960PD6	<88044>	...WASHER,FLAT.....		HD		1	*	*	*		*	141	
			5315-234-1856	MS24665-155	<96906>	...PIN,COTTER.....		HD		1	*	*	*		*	141	
						---*---											
P	F		1560-565-8500	S1655-61207-1	<78286>	...WELD ASSEMBLY,BATTERY..... TIE-DOWN ROD		EA		1	*	*	REF		REF	141	16
AF	F			S1655-66112	<78286>	..SHELF ASSEMBLY.....		EA		1						141	17
P	O		5315-674-5506	S1655-66112-2	<78286>	...PIN ASSEMBLY..... ATTACHING PARTS		EA		1	*	*	*		*	141	18
				MS20470DD2-8	<96906>	...RIVET.....		EA		1						141	19
						---*---											
P	O		4010-674-6983	S1655-66112-3	<78286>	....CHAIN,BEAD.....		EA		1	2	2	4		*	141	20
P	O		5340-653-0214	B407RD	<84256>	....PIN,QUICK RELEASE.....		EA		1	*	*	*		*	141	21
P	F		1560-653-0001	S1655-61209-1	<78286>	...SUPPORT,ELECTRICAL..... BATTERY ATTACHING PARTS		EA		2	REF	REF	REF		*	141	22
			5305-989-7434	MS35207-263	<96906>	...SCREW,MACHINE.....				2	*	*	*		*	141	23
			5310-183-4406	AN960PD10	<88044>	...WASHER,FLAT.....		HD		2	*	*	*		*	141	
			5306-638-2214	AN4283	<88044>	...BOLT,EYE.....		EA		1	*	*	*		*	141	24
			5310-167-0753	AN960PD10L	<88044>	...WASHER,FLAT.....		HD		1	*	*	*		*	141	
						---*---											
P	O		1560-613-9670	S1655-66112-1	<78286>	...PANEL ASSEMBLY,BATTERY....		EA		1	2	2	4		*	141	25
P	O		6140-321-2281	AN3156-3	<88044>	..CLAMP,BATTERY HOLD DOWN....		EA		1	*	*	*		REF	141	26
AO	O			S1655-61605	<78286>	..BATTERY ASSEMBLY,ELECTRICAL		EA		1						141	27
P	O		1560-679-8124	S1655-61608-7	<78286>	...TUBE,ELECTRICAL BATTERY...		EA		1	*	*	*		*	141	
P	F		5935-888-7405	CA011749-001	<71468>	...CONNECTOR,RECEPTACLE,..... ELECTRICAL		EA		1	*	*	*		REF	141	28
P	O		6140-248-6148	AN3150-2	<88044>	...BATTERY,STORAGE-24V,36....		EA		1					REF	141	29

(1) SOURCE, MAINT AND REC CODE (a) SOURCE CODE	(b) MAINT LEVEL	(c) REC CODE	(2) FEDERAL STOCK NUMBER	REFERENCE NUMBER	(3) DESCRIPTION	MODELS USABLE ON CH-34C	(4) UNIT OF ISSUE	(5) QTY INC IN UNIT PACK	(6) QTY INC IN UNIT	(7) 30-DAY DS GS MAINT ALW (a) 1-20	(b) 21-50	(c) 51-100	(8) 1-YR ALW PER 100 EQUIP CNTGCY	(9) DEPOT MAINT ALW PER 100 EQUIP	(10) ILLUSTRATION (a) FIG NO	(b) ITEM NO
					CONTINUED										141	29
					AMP HR											
P	O		8125-685-4964	15465-5D <70843>	.JAR,MASON 1 PT.....		EA		1	*	*	*		*	141	30
P	O		6140-711-5437	N3253-2 <85812>	.LID,BATTERY SUMP RPLS--....		EA		1	*	*	*		*	141	31
					6140-333-8979											
P	O		6140-345-9636	S10-55-3013 <78286>	.PAD,BATTERY DRAIN SUMP.....		EA		1	*	*	*		REF	141	32
AF	F			S1620-63054 <78286>	.BRACKET ASSEMBLY.....		EA		1						141	33
					ATTACHING PARTS											
				MS20470AD4 <96906>	.RIVET.....		EA		4						141	34
					---*---											
P	O		6140-321-2281	AN3156-3 <88044>	..CLAMP,BATTERY HOLD DOWN....		EA		1	*	*	*		*	141	35
					ATTACHING PARTS											
				MS20470AD4 <96906>	..RIVET.....		EA		2						141	36
					---*---											
				MS20470AD4 <96906>	..RIVET.....		EA		8						141	37
MF	F			S1620-63054-1 <78286>	..CLIP,BATTERY SUMP JAR.....		EA		1						141	38
					MAKEFR											
					AR 9535-554-1414 AL ALLY SH											
				S14-20-2772-4 <78286>	..BRACKET.....		EA		1						141	39
				S1665-61500-1 <78286>	AUTOMATIC STABILIZATION.....										144	
					SERVO HYDRAULIC SYSTEM											
					INSTALLATION USBL EFF											
					53-4475 THRU 56-4312 SEE											
					FIG.40 FOR NHA											
MF	O			4720EG007-8C0510 <81996>	.HOSE ASSEMBLY.....		EA		1						144	1
					TETRAFLUOROETHYLENE											
					MAKEFR											
					AR 4720-815-6354 HOSE											
					1 EA 4730-952-5528 NIPPLE											
					2 EA 4730-967-9516 SOCKET											
					1 EA 4730-967-9523 SLEEVE											
					1 EA 4730-967-9524 SLEEVE											
					1 EA 4730-969-6669 ELBOW											
					2 EA 5340-988-6032 DUST PLUG											
P	O		4730-554-7737	155S5-8D <00624>	.COUPLING,HALF,SELF-SEALING..		EA		1	*	*	*		*	144	2
P	F		1560-768-3769	S1665-61533-1 <78286>	.TUBE ASSEMBLY,METAL.....		EA		1	*	*	2		*	144	3
			4730-277-5081	AN6289D8 <88044>	.LOCKNUT,TUBE FITTING.....		EA		1	*	*	*		*	144	4
			5330-808-0794	MS28778-8 <96906>	.PACKING,PREFORMED.....		EA		1	REF	REF	REF		*	144	
			5330-186-1380	MS28777-8 <96906>	.WASHER,NONMETALLIC.....		LL		1	*	*	*		*	144	
			4730-197-2917	MS24394D8 <96906>	.ELBOW,TUBE.....		EA		1	*	*	*		*	144	
P	O		1560-768-3774	S1665-61533-3 <78286>	.TUBE ASSEMBLY.....		EA		1	*	*	*		*	144	5
			4730-277-5081	AN6289D8 <88044>	.LOCKNUT,TUBE FITTING.....		EA		1	*	*	*		*	144	6
			5330-808-0794	MS28778-8 <96906>	.PACKING,PREFORMED.....		EA		1	REF	REF	REF		*	144	
			5330-186-1380	MS28777-8 <96906>	.WASHER,NONMETALLIC.....		LL		1	*	*	*		*	144	
			4730-804-1932	MS24396D8 <96906>	.ELBOW,TUBE.....		EA		1	*	*	*		*	144	
MF	O			4720EG007-10-0460 <81996>	.HOSE ASSEMBLY.....		EA		1						144	7

(1) SOURCE, MAINT AND REC CODE (a) SOURCE CODE	(b) MAINT LEVEL	(c) REC CODE	(2) FEDERAL STOCK NUMBER	REFERENCE NUMBER		(3) DESCRIPTION	MODELS USABLE ON CH-34C	(4) UNIT OF ISSUE	(5) QTY INC IN UNIT PACK	(6) QTY INC IN UNIT	(7) 30-DAY DS GS MAINT ALW (a) 1-20	(b) 21-50	(c) 51-100	(8) 1-YR ALW PER 100 EQUIP CNTGCY	(9) DEPOT MAINT ALW PER 100 EQUIP	(10) ILLUSTRATION (a) FIG NO	(b) ITEM NO
						CONTINUED										144	7
						TETRAFLUOROETHYLENE											
						MAKEFR											
						AR 4720-857-1730 HOSE											
						2 EA 4730-017-8659 NIPPLE											
						2 EA 4730-967-9517 SOCKET											
						2 EA 4730-967-9525 SLEEVE											
						2 EA 5340-726-3009 DUST PLUG											
P	O		4730-554-7738	155S5-10D	<00624>	.COUPLING,HALF,SELF-SEALING..		EA		1	REF	REF	REF		REF	144	8
P	O		1560-769-3130	S1665-61533-73	<78286>	.TUBE ASSEMBLY.....		EA		1	*	*	*		*	144	9
MF	O			4720EG003-6C0370	<81996>	.HOSE ASSEMBLY.....		EA		1						144	10
						TETRAFLUOROETHYLENE											
						MAKEFR											
						AR 4720-857-1731 HOSE											
						2 EA 4730-952-5529 NIPPLE											
						2 EA 4730-967-9515 SOCKET											
						2 EA 4730-967-9523 SLEEVE											
						2 EA 5340-988-6032 DUST PLUG											
MF	O			4720EG003-6C0490	<81996>	.HOSE ASSEMBLY,.....		EA		1						144	
						TETRAFLUOROETHYLENE											
						MAKEFR											
						AR 4720-857-1731 HOSE											
						2 EA 4730-952-5529 NIPPLE											
						2 EA 4730-967-9515 SOCKET											
						2 EA 4730-967-9523 SLEEVE											
						2 EA 5340-988-6032 DUST PLUG											
P	O		4730-958-8194	1-160-317-01	<91547>	.BOLT,FLUID PASSAGE.....		EA		1	*	*	*	REF	REF	144	11
MF	F			S1665-61533-67	<78286>	.TUBE ASSEMBLY,METAL.....		EA		1						144	12
						MAKEFR											
						AR 4710-278-8740 TUBE											
						2 EA 4730-277-5358 SLEEVE											
						2 EA 4730-287-0290 NUT											
P	F		4330-517-7776	MS28720-8	<96906>	.FILTER,FLUID,PRESSURE.....		EA		1	REF	REF	REF	REF	REF	144	13
						ATTACHING PARTS											
			5306-182-1966	AN4H20A	<88044>	.BOLT,MACHINE.....		HD		2	*	*	*		*	144	14
			5310-559-5009	MS15795-704	<96906>	.WASHER,FLAT.....		HD		2	*	*	*		*	144	
						---*---											
P	O		1560-769-3129	S1665-61533-75	<78286>	.TUBE ASSEMBLY,METAL.....		EA		1	*	*	2		*	144	15
MF	F			S1665-61533-77	<78286>	.TUBE ASSEMBLY.....		EA		1						144	16
						MAKEFR											
						AR 4710-278-9371 TUBE											
						1 EA 4730-278-0678 SLEEVE											
						1 EA 4730-334-7845 NUT											
P	F		1560-769-3128	S1665-61533-79	<78286>	.TUBE ASSEMBLY,METAL.....		EA		1	*	*	*		*	144	17
P	O		1560-768-3770	S1665-61533-13	<78286>	.TUBE ASSEMBLY.....		EA		1	*	*	2		*	144	18
			4730-287-0297	AN818-8	<88044>	..NUT,TUBE COUPLING.....		EA		2	*	*	*		*	144	19
			4730-277-5373	MS20819-8D	<96906>	..SLEEVE,FLARED,TUBE FITTING.		EA		2	*	*	*		*	144	20
P	F		1560-767-6417	S1665-61533-14	<78286>	..TUBE ASSEMBLY,SERVO.....		EA		1	*	*	*		*	144	21
P	O		1560-768-3772	S1665-61533-55	<78286>	.TUBE ASSEMBLY.....		EA		1	*	*	2		*	144	22
				S1665-61531	<78286>	.AUTOMATIC STABILIZATION.....										144	23
						SERVO HYDRAULIC SYSTEM											
						PANEL AND CASING											

(1) SOURCE, MAINT AND REC CODE (a) SOURCE CODE	(b) MAINT CODE	(c) REC CODE	(2) FEDERAL STOCK NUMBER	REFERENCE NUMBER		(3) DESCRIPTION	MODELS USABLE ON CH-34C	(4) UNIT OF ISSUE	(5) QTY INC IN UNIT PACK	(6) QTY INC IN UNIT	(7) 30-DAY DS GS MAINT ALW (a) 1-20	(b) 21-50	(c) 51-100	(8) 1-YR ALW PER 100 EQUIP CNTGCY	(9) DEPOT MAINT ALW PER 100 EQUIP	(10) ILLUSTRATION (a) FIG NO	(b) ITEM NO
						CONTINUED										144	23
						INSTALLATION USBL EFF											
						53-4475 THRU 56-4312											
						SEE FIG.146 FOR BREAKDOWN											
P	O		1560-769-3132	S1665-61533-15	<78286>	.TUBE ASSEMBLY.....		EA		1	*	*	*		*	144	24
			4730-684-6911	MS24392-4	<96906>	.NIPPLE,TUBE.....		EA		1	*	*	*		*	144	25
			5330-805-2966	MS28778-4	<96906>	.PACKING,PREFORMED.....		EA		1	REF	REF	REF	REF	*	144	
P	F		1650-343-5652	831-4-5	<82271>	.FUSE,HYDRAULIC.....		EA		1	*	*	*		*	144	26
			4730-684-6911	MS24392-4	<96906>	.NIPPLE,TUBE.....		EA		1	*	*	*		*	144	27
			5330-805-2966	MS28778-4	<96906>	.PACKING,PREFORMED.....		EA		1	REF	REF	REF	REF	*	144	
P	O		1560-768-3773	S1665-61533-31	<78286>	.TUBE ASSEMBLY,SERVO AUTO....		EA		1	*	*	*		*	144	28
						PILOT											
			4730-277-6372	AN6289-4	<88044>	.LOCKNUT,TUBE FITTING.....		EA		1	*	*	*		*	144	29
			5330-805-2966	MS28778-4	<96906>	.PACKING,PREFORMED.....		EA		1	REF	REF	REF	REF	*	144	
			5330-186-4947	MS28777-4	<96906>	.WASHER,NONMETALLIC.....		LL		1	*	*	*		*	144	
			5310-167-0822	AN960-716	<88044>	.WASHER,FLAT.....		HD		1	*	*	*		*	144	
			4730-231-3026	AN833-4	<88044>	.ELBOW,TUBE.....		EA		1	*	*	*		*	144	
P	O		4720-289-6314	MS28741-4-0060	<96906>	.HOSE ASSEMBLY,RUBBER.....		EA		1	*	*	*		*	144	30
MF	F			S1665-61533-85	<78286>	.TUBE ASSEMBLY.....		EA		1						144	31
						MAKEFR											
						2 EA 4730-287-0289 NUT											
						2 EA 4730-302-8641 SLEEVE											
						AR 4710-278-6398 TUBING											
			4730-287-0289	AN818-4D	<88044>	..NUT,TUBE COUPLING.....		EA		2	*	*	*		*	144	32
			4730-302-8641	MS20819-4D	<96906>	..SLEEVE,FLARED TUBE FITTING.		EA		2	*	*	*		*	144	33
			4730-722-7212	MS24401D4	<96906>	.ELBOW,TUBE.....		EA		1	*	*	*		*	144	35
MF	F			S1665-61533-83	<78286>	.TUBE ASSEMBLY.....		EA		1						144	36
						MAKEFR											
						AR 4730-278-6398 TUBE											
						2 EA 4730-287-0289 NUT											
						2 EA 4730-302-8641 SLEEVE											
MF	F			S1665-61533-81	<78286>	.TUBE ASSEMBLY.....		EA		1						144	40
						MAKEFR											
						AR 4730-278-6398 TUBE											
						2 EA 4730-287-0289 NUT											
						2 EA 4730-302-8641 SLEEVE											
MF	F			S1665-61533-82	<78286>	..TUBE.....		EA		1						144	43
						MAKEFR											
						AR 4710-279-0955 TUBE											
			4730-722-1207	MS24402D4	<96906>	.TEE,TUBE.....		EA		1	*	*	*		*	144	44
MF	F			S1665-61533-87	<78286>	.TUBE ASSEMBLY.....		EA		1						144	45
						MAKEFR											
						AR 4710-278-6398 TUBE											
						2 EA 4730-287-0289 NUT											
						2 EA 4730-302-8641 SLEEVE											
			4730-287-0289	AN818-4D	<88044>	..NUT,TUBE COUPLING.....		EA		2	*	*	*		*	144	46
			4730-302-8641	MS20819-4D	<96906>	..SLEEVE,FLARED TUBE FITTING.		EA		2	*	*	*		*	144	47
MF	F			S1665-61533-89	<78286>	.TUBE ASSEMBLY.....		EA		1						144	49
						MAKEFR											
						AR 4710-278-6398 TUBE											
						2 EA 4730-287-0289 NUT											
						2 EA 4730-302-8641 SLEEVE											

(1) SOURCE, MAINT AND REC CODE (a) SOURCE CODE	(b) MAINT LEVEL	(c) REC CODE	(2) FEDERAL STOCK NUMBER	(3) DESCRIPTION REFERENCE NUMBER			MODELS USABLE ON CH-34C	(4) UNIT OF ISSUE	(5) QTY INC IN UNIT PACK	(6) QTY INC IN UNIT	(7) 30-DAY DS GS MAINT ALW (a) 1-20	(b) 21 50	(c) 51-100	(8) 1-YR ALW PER 100 EQUIP CNTGCY	(9) DEPOT MAINT ALW PER 100 EQUIP	(10) ILLUSTRATION (a) FIG NO	(b) ITEM NO
MF	F			S1665-61533-91	<78286>	.TUBE ASSEMBLY.....		EA		1						144	53
						MAKEFR											
						2 EA 4730-287-0289 NUT											
						2 EA 4730-302-8641 SLEEVE											
						AR 4710-278-6398 TUBING											
			4730-287-0289	AN818-4D	<88044>	..NUT,TUBE COUPLING.....		EA		2	*	*	*		*	144	54
			4730-302-8641	MS20819-4D	<96906>	..SLEEVE,FLARED TUBE FITTING.		EA		2	*	*	*		*	144	55
			4730-722-1207	MS24402D4	<96906>	.TEE,TUBE.....		EA		1	*	*	*		*	144	57
MF	O			4720EG003-4C0100	<81996>	.HOSE ASSEMBLY,.....		EA		1						144	58
						TETRAFLUOROETHYLENE											
						MAKEFR											
						AR 4720-857-1732 HOSE											
						2 EA 4730-952-5532 NIPPLE											
						2 EA 4730-967-9513 SOCKET											
						2 EA 4730-967-9521 SLEEVE											
						2 EA 5340-834-8330 DUST PLUG											
			4730-277-6371	AN6289D4	<88044>	.LOCKNUT,TUBE FITTING.....		EA		1	*	*	*		*	144	59
			5330-805-2966	MS28778-4	<96906>	.PACKING,PREFORMED.....		EA		1	REF	REF	REF	REF	*	144	
			5330-186-4947	MS28777-4	<96906>	.WASHER,NONMETALLIC.....		LL		1	*	*	*		*	144	
			4730-725-4351	MS24394D4	<96906>	.ELBOW,TUBE.....		EA		1	*	*	*		*	144	
MF	F			S1665-61533-97	<78286>	.TUBE ASSEMBLY.....		EA		1						144	60
						MAKEFR											
						AR 4710-279-0948 TUBE											
						2 EA 4730-287-0288 NUT											
						2 EA 4730-302-8641 SLEEVE											
			4730-287-0288	AN818-8D	<88044>	..NUT,TUBE COUPLING.....		EA		2	*	*	*		*	144	61
			4730-277-5373	MS20819-8D	<96906>	..SLEEVE,FLARED TUBE FITTING.		EA		2	*	*	*		*	144	62
MF	F			S1665-61533-18	<78286>	..TUBE.....		EA		1						144	63
						MAKEFR											
						2 EA 4730-287-0289 NUT											
						2 EA 4730-302-8641 SLEEVE											
						AR 4710-278-6398 TUBING											
MF	F			S1665-61533-98	<78286>	..TUBE.....		EA		1						144	
						MAKEFR											
						2 EA 4730-287-0288 NUT											
						2 EA 4730-302-8641 SLEEVE											
						AR 4710-279-0948 TUBING											
			4730-720-3960	MS24401D8	<96906>	.ELBOW,TUBE.....		EA		1	*	*	*		*	144	64
MF	F			S1665-61533-19	<78286>	.TUBE ASSEMBLY,METAL.....		EA		1						144	65
						MAKEFR											
						2 EA 4730-287-0289 NUT											
						2 EA 4730-302-8641 SLEEVE											
						AR 4710-279-0948 TUBING											
MF	F			S1665-61533-99	<78286>	.TUBE ASSEMBLY.....		EA		1						144	
						MAKEFR											
						2 EA 4730-287-0288 NUT											
						2 EA 4730-302-8641 SLEEVE											
						AR 4710-279-0948 TUBING											
			4730-287-0288	AN818-8D	<88044>	..NUT,TUBE COUPLING.....		EA		2	*	*	*		*	144	66
			4730-277-5373	MS20819-8D	<96906>	..SLEEVE,FLARED TUBE FITTING.		EA		2	*	*	*		*	144	67
MF	F			S1665-61533-20	<78286>	..TUBE APPLTO.....		EA		1						144	68
						PN S1665-61533-19											

(1) SOURCE, MAINT AND REC CODE (a) SOURCE CODE	(b) MAINT LEVEL	(c) REC CODE	(2) FEDERAL STOCK NUMBER	REFERENCE NUMBER	(3) DESCRIPTION	MODELS USABLE ON CH-34C	(4) UNIT OF ISSUE	(5) QTY INC IN UNIT PACK	(6) QTY INC IN UNIT	(7) 30-DAY DS/GS MAINT ALW (a) 1-20	(b) 21-50	(c) 51-100	(8) 1-YR ALW PER 100 EQUIP CNTGCY	(9) DEPOT MAINT ALW PER 100 EQUIP	(10) ILLUSTRATION (a) FIG NO	(b) ITEM NO
					MAKEFR										144	68
					2 EA 4730-287-0288 NUT											
					2 EA 4730-277-5373 SLEEVE											
					AR 4710-279-0948 TUBING											
			4730-277-5081	AN6289D8	<88044> .LOCKNUT,TUBE FITTING.....		EA		1	*	*	*		*	144	69
			5330-808-0794	MS28778-8	<96906> .PACKING,PREFORMED.....		EA		1	REF	REF	REF		*	144	
			5330-186-1380	MS28777-8	<96906> .WASHER,NONMETALLIC.....		LL		1	*	*	*		*	144	
			4730-804-1932	MS24396D8	<96906> .ELBOW,TUBE.....		EA		1	*	*	*		*	144	
MF	F			S1665-61533-53	<78286> .TUBE ASSEMBLY.....		EA		1						144	70
					MAKEFR											
					AR 4710-279-0948 TUBE											
					2 EA 4730-277-5373 SLEEVE											
					2 EA 4730-287-0288 NUT											
			4730-720-3960	MS24401D8	<96906> .ELBOW,TUBE.....		EA		1	*	*	*		*	144	74
MF	F			S1665-61533-51	<78286> .TUBE ASSEMBLY.....		EA		1						144	75
					MAKEFR											
					2 EA 4730-287-0288 NUT											
					2 EA 4730-277-5373 SLEEVE											
					AR 4710-279-0948 TUBE											
			4730-277-5081	AN6289D8	<88044> .LOCKNUT,TUBE FITTING.....		EA		1	*	*	*		*	144	79
			5330-808-0794	MS28788-8	<96906> .PACKING,PREFORMED.....		EA		1	REF	REF	REF		*	144	
			5330-186-1380	MS28777-8	<96906> .WASHER,NONMETALLIC.....		LL		1	*	*	*		*	144	
			4730-804-1932	MS24396D8	<96906> .ELBOW,TUBE.....		EA		1	*	*	*		*	144	
MF	F			S1665-61533-25	<78286> .TUBE ASSEMBLY.....		EA		1						144	80
					MAKEFR											
					AR 4710-279-0917 TUBE											
					2 EA 4730-289-0289 NUT											
					2 EA 4730-302-8641 SLEEVE											
MF	F			S1665-61533-26	<78286> ..TUBE.....		EA		1						144	83
					MAKEFR											
					2 EA 4730-287-0288 NUT											
					2 EA 4730-277-5373 SLEEVE											
					AR 4710-278-0948 TUBE											
			4730-277-6371	AN6289D4	<88044> .LOCKNUT,TUBE FITTING.....		EA		1	*	*	*		*	144	84
			5330-805-2966	MS28778-4	<96906> .PACKING,PREFORMED.....		EA		1	REF	REF	REF	REF	*	144	
			5330-186-4947	MS28777-4	<96906> .WASHER,NONMETALLIC.....		LL		1	*	*	*		*	144	
			4730-803-5049	MS24396D4	<96906> .ELBOW,TUBE.....		EA		1	*	*	*		*	144	
			4730-834-9560	MS24392D4	<96906> .NIPPLE,TUBE.....		EA		1	REF	REF	REF	REF	*	144	85
MF	F			S1665-61533-27	<78286> .TUBE ASSEMBLY.....		EA		1						144	86
					MAKEFR											
					2 EA 4730-289-0289 NUT											
					2 EA 4730-302-8641 SLEEVE											
					AR 4710-278-6398 TUBING											
			4730-287-0289	AN818-4D	<88044> ..NUT,TUBE COUPLING.....		EA		2	*	*	*		*	144	87
			4730-302-8641	MS20819-4D	<96906> ..SLEEVE,FLARED TUBE FITTING.		EA		2	*	*	*		*	144	88
MF	F			S1665-61533-28	<78286> ..TUBE.....		EA		1						144	89
					MAKEFR											
					2 EA 4730-287-0289 NUT											
					2 EA 4730-302-8641 SLEEVE											
					AR 4710-278-6398 TUBING											
MF	F			S1665-61533-29	<78286> .TUBE ASSEMBLY.....		EA		1						144	90
					MAKEFR											

(1) SOURCE, MAINT AND REC CODE (a) SOURCE CODE	(b) MAINT LEVEL	(c) REC CODE	(2) FEDERAL STOCK NUMBER	REFERENCE NUMBER		(3) DESCRIPTION	MODELS USABLE ON CH-34C	(4) UNIT OF ISSUE	(5) QTY INC IN UNIT PACK	(6) QTY INC IN UNIT	(7) 30-DAY DS GS MAINT ALW (a) 1-20	(b) 21-50	(c) 51-100	(8) 1-YR ALW PER 100 EQUIP CNTGCY	(9) DEPOT MAINT ALW PER 100 EQUIP	(10) ILLUSTRATION (a) FIG NO	(b) ITEM NO
						CONTINUED										144	90
						AR 4710-279-0917 TUBE											
						2 EA 4730-287-0289 NUT											
						2 EA 4730-302-8641 SLEEVE											
			4730-277-6371	AN6289D4	<88044>	.LOCKNUT,TUBE FITTING.....		EA		1	*	*	*		*	144	94
			5330-805-2966	MS28778-4	<96906>	.PACKING,PREFORMED.....		EA		1	REF	REF	REF	REF	*	144	
			5330-186-4947	MS28777-4	<96906>	.WASHER,NONMETALLIC.....		LL		1	*	*	*		*	144	
			4730-803-5049	MS24396D4	<96906>	.ELBOW,TUBE.....		EA		1	*	*	*		*	144	
MF	F			S1665-61533-41	<78286>	.TUBE ASSEMBLY.....		EA		1						144	95
						MAKEFR											
						AR 4710-279-0917 TUBE											
						2 EA 4730-287-0289 NUT											
						2 EA 4730-302-8641 SLEEVE											
MF	F			S1665-61533-42	<78286>	..TUBE.....		EA		1						144	98
						MAKEFR											
						AR 4710-278-6398 TUBE											
			4730-277-6371	AN6289D4	<88044>	.LOCKNUT,TUBE FITTING.....		EA		1	*	*	*		*	144	99
			5330-805-2966	MS28778-4	<96906>	.PACKING,PREFORMED.....		EA		1	REF	REF	REF	REF	*	144	
			5330-186-4947	MS28777-4	<96906>	.WASHER,NONMETALLIC.....		LL		1	*	*	*		*	144	
			4730-725-4351	MS24394D4	<96906>	.ELBOW,TUBE.....		EA		1	*	*	*		*	144	
MF	F			S1665-61533-43	<78286>	.TUBE ASSEMBLY.....		EA		1						144	100
						MAKEFR											
						2 EA 4730-287-0289 NUT											
						2 EA 4730-302-8641 SLEEVE											
						AR 4710-278-6398 TUBING											
			4730-287-0289	AN818-4D	<88044>	..NUT,TUBE COUPLING.....		EA		2	*	*	*		*	144	101
			4730-302-8641	MS20819-4D	<96906>	..SLEEVE,FLARED TUBE FITTING.		EA		2	*	*	*		*	144	102
MF	F			S1665-61533-44	<78286>	..TUBE.....		EA		1						144	103
						MAKEFR											
						AR 4710-278-6398 TUBE											
						2 EA 4730-287-0289 NUT											
						2 EA 4730-302-8641 SLEEVE											
			4730-834-9560	MS24392D4	<96906>	.NIPPLE,TUBE.....		EA		1	REF	REF	REF	REF	*	144	104
MF	F			S1665-61533-45	<78286>	.TUBE ASSEMBLY.....		EA		1						144	105
						MAKEFR											
						AR 4710-279-0917 TUBE											
						2 EA 4730-287-0289 NUT											
						2 EA 4730-302-8641 SLEEVE											
			4730-277-6371	AN6289D4	<88044>	.LOCKNUT,TUBE FITTING.....		EA		1	*	*	*		*	144	109
			5330-805-2966	MS28778-4	<96906>	.PACKING,PREFORMED.....		EA		1	REF	REF	REF	REF	*	144	
			5330-186-4947	MS28777-4	<96906>	.WASHER,NONMETALLIC.....		LL		1	*	*	*		*	144	
			4730-725-4351	MS24394D4	<96906>	.ELBOW,TUBE.....		EA		1	*	*	*		*	144	
MF	F			S1665-61533-47	<78286>	.TUBE ASSEMBLY.....		EA		1						144	110
						MAKEFR											
						AR 4710-279-0948 TUBE											
						2 EA 4730-277-5373 SLEEVE											
						2 EA 4730-287-0288 NUT											
MF	F			S1665-61533-49	<78286>	.TUBE ASSEMBLY.....		EA		1						144	114
						MAKEFR											
						AR 4710-279-0948 TUBE											
						2 EA 4730-277-5373 SLEEVE											
						2 EA 4730-287-0288 NUT											

(1) SOURCE MAINT AND REC CODE (a) SOURCE CODE	(b) MAINT CODE	(c) REC CODE	(2) FEDERAL STOCK NUMBER	REFERENCE NUMBER	(3) DESCRIPTION	MODELS USABLE ON CH-34C	(4) UNIT OF ISSUE	(5) QTY INC IN UNIT PACK	(6) QTY INC IN UNIT	(7) 30-DAY DS GS MAINT ALW (a) 1-20	(b) 21-50	(c) 51-100	(8) 1-YR ALW PER 100 EQUIP CNTGCY	(9) DEPOT MAINT ALW PER 100 EQUIP	(10) ILLUSTRATION (a) FIG NO	(b) ITEM NO
			4730-684-6915	MS24392D8 <96906>	.NIPPLE,TUBE.....		EA		1	*	*	REF	REF	*	144	118
			5330-808-0794	MS28778-8 <96906>	.PACKING,PREFORMED.....		EA		1	REF	REF	REF		*	144	
P	F		4720-078-8704	MS27363E0030 <96906>	.HOSE ASSEMBLY.....		EA		1	*	*	*		*	144	119
MF	O			4720EG002-4C0130 <81996>	.HOSE ASSEMBLY,.....		EA		1						144	
					TETRAFLUOROETHYLENE											
					MAKEFR											
					AR 4720-857-1732 HOSE											
					2 EA 4730-952-5532 ADAPTER											
					2 EA 4730-967-9514 NUT											
					2 EA 4730-967-9521 SLEEVE											
					2 EA 5340-781-8061 PLUG DUST											
			4730-277-6371	AN6289D4 <88044>	.LOCKNUT,TUBE FITTING.....		EA		1	*	*	*		*	144	120
			5330-805-2966	MS28778-4 <96906>	.PACKING,PREFORMED.....		EA		1	REF	REF	REF	REF	*	144	
			5330-186-4947	MS28777-4 <96906>	.WASHER,NONMETALLIC.....		LL		1	*	*	*		*	144	
			4730-725-4351	MS24394D4 <96906>	.ELBOW,TUBE.....		EA		1	*	*	*		*	144	
P	O		6685-516-7562	8195-1 <99643>	.DAMPER,FLUID PRESSURE.....		EA		1	*	*	*		REF	144	121
P	F		4330-033-4783	11223-50 <75287>	.FILTER,FLUID,PRESSURE.....		EA		1	*	*	*		REF	144	122
			4730-277-6371	AN6289D4 <88044>	.LOCKNUT,TUBE FITTING.....		EA		1	*	*	*		*	144	123
			5330-805-2966	MS28778-4 <96906>	.PACKING,PREFORMED.....		EA		1	REF	REF	REF	REF	*	144	
			5330-186-4947	MS28777-4 <96906>	.WASHER,NONMETALLIC.....		LL		1	*	*	*		*	144	
			4730-803-5049	MS24396D4 <96906>	.ELBOW,TUBE.....		EA		1	*	*	*		*	144	
P	O		6685-087-8229	7609-37M5-2 <02987>	.TRANSMITTER,PRESSURE.....		EA		1	REF	REF	REF	REF	REF	144	124
					RPLS-- 6685-512-1228,											
					6685-515-4710,											
					6685-526-7881,											
					6685-530-3538,											
					6685-556-8810,											
					6685-585-9348,											
					6685-663-8559,											
					6685-663-8566,&											
					6685-833-3020											
P	F		1560-924-0383	S1665-61524-1 <78286>	.SUPPORT ASSEMBLY,HYDRAULIC..		EA		1	*	*	*		*	144	126
			5305-993-1848	MS35207-265 <96906>	.SCREW,MACHINE.....		HD		4	*	*	*		*	144	127
			5310-167-0753	AN960PD10L <88044>	.WASHER,FLAT.....		HD		8	*	*	*		*	144	
			5310-877-5797	MS21044N3 <96906>	.NUT,SELF-LOCKING,HEXAGON....		EA		4	*	*	*		*	144	
					---*---											
P	F		1560-663-2872	S1520-61987 <78286>	..SPRING,HELICAL,EXTENSION...		EA		1	REF	REF	REF		REF	144	128
P	F		1560-627-2157	S1665-61679 <78286>	..ADAPTER ASSEMBLY.....		EA		1	*	*	*		REF	144	129
					ATTACHING PARTS											
			5306-182-2063	AN3H12A <88044>	..BOLT,MACHINE.....		HD		2	*	*	*		*	144	130
			5310-183-4406	AN960PD10 <88044>	..WASHER,FLAT.....		HD		2	*	*	*		*	144	
			5310-877-5797	MS21044N3 <96906>	..NUT,SELF-LOCKING,HEXAGON...		EA		2	*	*	*		*	144	
					---*---											
P	F		5340-723-2756	NAS43DD3-44 <80205>	..SPACER,SLEEVE.....		EA		2	*	*	*		REF	144	131
P	F		5310-217-1565	S14-35-4401 <78286>	..WASHER,FLAT.....		EA		2	REF	REF	REF		REF	144	132
MF	F			S1665-61533-21 <78286>	.TUBE ASSEMBLY.....		EA		1						144	134
					MAKEFR											
					2 EA 4730-287-0288 NUT											
					2 EA 4730-277-5373 SLEEVE											
					AR 4710-279-0948 TUBE											
			4730-287-0288	AN818-8D <88044>	..NUT,TUBE COUPLING.....		EA		2	*	*	*		*	144	135
			4730-277-5373	MS20819-8D <96906>	..SLEEVE,FLARED TUBE FITTING.		EA		2	*	*	*		*	144	136

(1) SOURCE, MAINT AND REC CODE (a) SOURCE CODE	(b) MAINT LEVEL	(c) REC CODE	(2) FEDERAL STOCK NUMBER	REFERENCE NUMBER		(3) DESCRIPTION	MODELS USABLE ON CH-34C	(4) UNIT OF ISSUE	(5) QTY INC IN UNIT PACK	(6) QTY INC IN UNIT	(7) 30-DAY DS GS MAINT ALW (a) 1-20	(b) 21-50	(c) 51-100	(8) 1-YR ALW PER 100 EQUIP CNTGCY	(9) DEPOT MAINT ALW PER 100 EQUIP	(10) ILLUSTRATION (a) FIG NO	(b) ITEM NO
MF	F			S1665-61533-22	<78286>	..TUBE.....		EA		1						144	137
						MAKEFR											
						2 EA 4730-287-0288 NUT											
						2 EA 4730-277-5373 SLEEVE											
						AR 4710-279-0948 TUBING											
			4730-277-5081	AN6289D8	<88044>	.LOCKNUT,TUBE FITTING.....		EA		1	*	*	*		*	144	138
			5330-808-0794	MS28778-8	<96906>	.PACKING,PREFORMED.....		EA		1	REF	REF	REF		*	144	
			5330-186-1380	MS28777-8	<96906>	.WASHER,NONMETALLIC.....		LL		1	*	*	*		*	144	
			4730-197-2917	MS24394D8	<96906>	.ELBOW,TUBE.....		EA		1	*	*	*		*	144	
			4730-834-9560	MS24392D4	<96906>	.NIPPLE,TUBE.....		EA		1	REF	REF	REF	REF	*	144	139
			5330-805-2966	MS28778-4	<96906>	.PACKING,PREFORMED.....		EA		1	REF	REF	REF	REF	*	144	
P	F		4720-868-5799	MS27363E0140	<96906>	.HOSE ASSEMBLY,.....		EA		1	2	2	3		*	144	140
						TETRAFLUOROETHYLENE											
			4730-277-6371	AN6289D4	<88044>	.LOCKNUT,TUBE FITTING.....		EA		1	*	*	*		*	144	141
			5330-805-2966	MS28778-4	<96906>	.PACKING,PREFORMED.....		EA		1	REF	REF	REF	REF	*	144	
			5330-186-4947	MS28777-4	<96906>	.WASHER,NONMETALLIC.....		LL		1	*	*	*		*	144	
			4730-803-5049	MS24396D4	<96906>	.ELBOW,TUBE.....		EA		1	*	*	*		*	144	
P	F		1560-339-9578	S1665-61548	<78286>	.MANIFOLD,SERVO AUTOMATIC....		EA		1	*	*	*		*	144	142
						PILOT											
						ATTACHING PARTS											
			5305-044-4181	MS35266-75	<96906>	.SCREW,MACHINE.....		EA		4	*	*	*		*	144	143
			5310-167-0753	AN960PD10L	<88044>	.WASHER,FLAT.....		HD		4	*	*	*		*	144	
			5310-877-5797	MS21044N3	<96906>	.NUT,SELF-LOCKING,HEXAGON....		EA		4	*	*	*		*	144	
						---*---											
				S1665-61790-1	<78286>	AUTOMATIC STABILIZATION.....										145	
						SERVO HYDRAULIC SYSTEM											
						INSTALLATION USBL EFF											
						56-4313 AND SUBSEQUENT											
						SEE FIG.40 FOR NHA											
MF	O		4720-738-8306	EAB370-10-0420	<81996>	.HOSE ASSEMBLY.....		EA		1	*	*	*		*	145	1
						TETRAFLUOROETHYLENE											
						MAKEFR											
						AR 4720-857-1730 HOSE											
						2 EA 4730-017-8845 NUT											
						2 EA 4730-052-9517 ELBOW											
						2 EA 4730-967-9525 SLEEVE											
						2 EA 5340-726-3009 PLUG DUST											
P	O		4730-958-8194	1-160-317-01	<91547>	.BOLT,FLUID PASSAGE.....		EA		1	*	*	*	REF	REF	145	2
P	F		1560-672-4809	S1665-61533-177	<78286>	.TUBE ASSEMBLY,AUTOMATIC.....		EA		1	*	*	*		*	145	3
						PILOT											
MF	F			S1665-61553-169	<78286>	.TUBE ASSEMBLY.....		EA		1						145	
						MAKEFR											
						AR 4710-278-8740 TUBE											
						2 EA 4730-287-0290 NUT											
						2 EA 4730-272-5388 SLEEVE											
MF	O			4720EG007-6C0440	<81996>	.HOSE ASSEMBLY,.....		EA		1						145	4

(1) SOURCE, MAINT AND REC CODE (a) SOURCE	(b) MAINT	(c) REC	(2) FEDERAL STOCK NUMBER	REFERENCE NUMBER		(3) DESCRIPTION	MODELS USABLE ON CH-34C	(4) UNIT OF ISSUE	(5) QTY INC IN UNIT PACK	(6) QTY INC IN UNIT	(7) 30-DAY DS GS MAINT ALW (a) 1-20	(b) 21-50	(c) 51-100	(8) 1-YR ALW PER 100 EQUIP CNTGCY	(9) DEPOT MAINT ALW PER 100 EQUIP	(10) ILLUSTRATION (a) FIG NO	(b) ITEM NO
						CONTINUED										145	4
						TETRAFLUOROETHYLENE											
						MAKEFR											
						AR 4720-857-1731 HOSE											
						2 EA 4730-952-5529 NIPPLE											
						2 EA 4730-967-9515 SOCKET											
						2 EA 4730-967-9523 SLEEVE											
						2 EA 4730-969-6670 ELBOW											
						2 EA 5340-988-6032 DUST PLUG											
P	O		4730-554-7738	155S5-10D	<00624>	.COUPLING,HALF,SELF-SEALING..		EA		1	REF	REF	REF		REF	145	5
MF	O			4720EG003-4C0130	<81996>	.HOSE ASSEMBLY.....		EA		1						145	
						TETRAFLUOROETHYLENE											
						MAKEFR											
						AR 4720-857-1732 HOSE											
						2 EA 4730-952-5532 ADAPTER											
						2 EA 4730-967-9514 NUT											
						2 EA 4730-967-9521 SLEEVE											
						2 EA 5340-781-8061 PLUG DUST											
MF	F			S1665-61533-175	<78286>	.TUBE ASSEMBLY.....		EA		1						145	6
						MAKEFR											
						AR 4710-278-2900 TUBE											
						2 EA 4730-231-3014 SLEEVE											
						2 EA 4730-277-5357 NUT											
MF	F			S1665-61553-151	<78286>	.TUBE ASSEMBLY.....		EA		1						145	
						MAKEFR											
						AR 4730-278-6398 TUBING											
						2 EA 4730-287-0289 NUT											
						2 EA 4730-302-8641 SLEEVE											
P	O		4720-738-8309	EAB370-8-0480-0	<81996>	.HOSE ASSEMBLY.....		EA		1	2	2	4		*	145	7
						TETRAFLUOROETHYLENE											
MF	O			4720EG007-8C0510	<81996>	.HOSE ASSEMBLY.....		EA		1						145	
						TETRAFLUOROETHYLENE											
						MAKEFR											
						AR 4720-815-6354 HOSE											
						1 EA 4730-952-5528 NIPPLE											
						2 EA 4730-967-9516 SOCKET											
						1 EA 4730-967-9523 SLEEVE											
						1 EA 4730-967-9524 SLEEVE											
						1 EA 4730-969-6669 ELBOW											
						2 EA 5340-988-6032 DUST PLUG											
P	O		4730-554-7737	155S5-8D	<00624>	.COUPLING,HALF,SELF-SEALING..		EA		1	*	*	*		REF	145	8
P	F		1560-672-0058	S1665-61533-133	<78286>	.TUBE ASSEMBLY,AUTOMATIC.....		EA		1	*	*	*		*	145	9
				S1665-61791	<78286>	.GUARD INSTALLATION.....				1						145	
			5306-182-2057	AN3H4A	<88044>	..BOLT,MACHINE.....		HD		6	*	*	*		*	145	10
			5310-167-0753	AN960PD10L	<88044>	..WASHER,FLAT.....		HD		6	*	*	*		*	145	
			5310-728-5510	MS21078-3	<96906>	..NUT,SELF-LOCKING,PLATE.....		EA		4	*	*	*		*	145	11
						ATTACHING PARTS											
				MS2047083	<96906>	..RIVET.....		EA		2						145	
						---*---											
AF	F			S1665-61791-1	<78286>	..GUARD ASSEMBLY.....		EA		1						145	13
			1560-627-2159	S1665-61791-3	<78286>	...BRACE,SERVO AUTO PILOT....										145	
						RPL-BY 1560-940-0343											

(1) SOURCE, MAINT AND REC CODE (a) SOURCE CODE	(b) MAINT LEVEL	(c) REC CODE	(2) FEDERAL STOCK NUMBER	REFERENCE NUMBER		(3) DESCRIPTION	MODELS USABLE ON CH-34C	(4) UNIT OF ISSUE	(5) QTY INC IN UNIT PACK	(6) QTY INC IN UNIT	(7) 30-DAY DS GS MAINT ALW (a) 1-20	(b) 21-50	(c) 51-100	(8) 1-YR ALW PER 100 EQUIP CNTGCY	(9) DEPOT MAINT ALW PER 100 EQUIP	(10) ILLUSTRATION (a) FIG NO	(b) ITEM NO
P	F		1560-940-0343	S1665-61791-5	<78286>	...BRACE,SERVO AUTOMATIC..... PILOT RPLS-- 1560-627-2159 ATTACHING PARTS		EA		1	*	*	*		*	145	14
				MS20470B4	<96906>	...RIVET,SOLID..... ---*---		EA		2						145	
P	F		1560-627-2158	S1665-61791-2	<78286>	...GUARD,SERVO AUTO PILOT....		EA		1	*	*	*		*	145	16
MF	O			472EG003-4C0060	<81996>	.HOSE ASSEMBLY,..... TETRAFLJOROETHYLENE MAKEFR AR 4720-857-1732 HOSE 1 EA 4730-952-5532 ADAPTER 2 EA 4730-967-9513 NUT 2 EA 4730-967-9521 SLEEVE 1 EA 4730-999-3390 NIPPLE 2 EA 5340-834-8330 DUST PLUG.		EA		1						145	17
P	O		1560-768-3773	S1665-61533-31	<78286>	.TUBE ASSEMBLY,SERVO AUTO.... PILOT		EA		1	*	*	*		REF	145	18
MF	F			S1665-61533-157	<78286>	.TUBE ASSEMBLY..... MAKEFR AR 4710-278-8097 TUBE 2 EA 4730-277-5373 SLEEVE 2 EA 4730-287-0288 NUT		EA		1						145	19
			4730-684-6911	MS24392-4	<96906>	.NIPPLE,TUBE.....		EA		2	*	*	*		*	145	20
			5330-805-2966	MS28778-4	<96906>	.PACKING,PREFORMED.....		EA		2	REF	REF	REF	REF	*	145	
P	F		1650-343-5652	831-4-5	<82271>	.FUSE,HYDRAULIC.....		EA		1	*	*	*		REF	145	21
P	O		1560-672-3531	S1665-61533-135	<78286>	.TUBE ASSEMBLY,AUTOMATIC..... PILOT		EA		1	*	*	*		*	145	22
P	F		1560-672-0057	S1665-61533-197	<78286>	.TUBE ASSEMBLY-TUNNEL TO..... ELBOW DRAIN		EA		1	*	*	*		*	145	23
AF	O			S1665-61533-199	<78286>	.TUBE ASSEMBLY,AUTOMATIC..... PILOT		EA		1						145	24
			4730-684-6915	MS24392D8	<96906>	.NIPPLE,TUBE.....		EA		1	*	*	REF	REF	*	145	25
			5330-808-0794	MS28778-8	<96906>	.PACKING,PREFORMED.....		EA		1	REF	REF	REF		*	145	
			4730-277-5081	AN6289D8	<88044>	.LOCKNUT,TUBE FITTING.....		EA		1	*	*	*		*	145	26
			5330-808-0794	MS28778-8	<96906>	.PACKING,PREFORMED.....		EA		1	REF	REF	REF		*	145	
			5330-186-1380	MS28777-8	<96906>	.WASHER,NONMETALLIC.....		LL		1	*	*	*		*	145	
			4730-197-2917	MS24394D8	<96906>	.ELBOW,TUBE.....		EA		1	*	*	*		*	145	
P	F		4330-517-7776	MS28720-8	<96906>	.FILTER,FLUID,PRESSURE..... ATTACHING PARTS		EA		1	REF	REF	REF	REF	REF	145	27
			5306-182-1966	AN4H20A	<88044>	.BOLT,MACHINE.....		HD		2	*	*	*		*	145	28
			5310-187-2354	AN960PD416	<88044>	.WASHER,FLAT..... ---*---		HD		2	*	*	*		*	145	
MF	F			S1665-61533-195	<78286>	.TUBE ASSEMBLY..... NOTE 1		EA		1						145	29
			4730-287-0289	AN818-4D	<88044>	..NUT,TUBE COUPLING.....		EA		2	*	*	*		*	145	
			4730-302-8641	MS20819-4D	<96906>	..SLEEVE,FLARED,TUBE FITTING.		EA		2	*	*	*		*	145	
				S1665-61533-196	<78286>	..TUBE.....		EA		1						145	32
			5310-656-0094	MS24400-4	<96906>	.NUT,PLAIN,HEXAGON.....		LL		1	*	*	*		*	145	33
			5310-187-2401	AN960PD716	<88044>	.WASHER,FLAT.....		HD		1	*	*	*		*	145	
			4730-725-4351	MS24394D4	<96906>	.ELBOW,TUBE.....		EA		1	*	*	*		*	145	
				S1665-61533-137	<78286>	.TUBE ASSEMBLY.....		EA		1						145	
			4730-287-0288	AN818-8D	<88044>	..NUT,TUBE COUPLING.....		EA		2	*	*	*		*	145	

(1) SOURCE, MAINT AND REC CODE (a) SOURCE	(b) MAINT	(c) RECOVERY	(2) FEDERAL STOCK NUMBER	REFERENCE NUMBER		(3) DESCRIPTION	MODELS USABLE ON CH-34C	(4) UNIT OF ISSUE	(5) QTY INC IN UNIT PACK	(6) QTY INC IN UNIT	(7) 30-DAY DS GS MAINT ALW (a) 1-20	(b) 21-50	(c) 51-100	(8) 1-YR ALW PER 100 EQUIP CNTGCY	(9) DEPOT MAINT ALW PER 100 EQUIP	(10) ILLUSTRATION (a) FIG NO	(b) ITEM NO
			4730-277-5373	MS20819-8D	<96906>	..SLEEVE,FLARED,TUBE FITTING.		EA		2	*	*	*		*	145	
			5310-208-5775	MS24400-8	<96906>	.NUT,PLAIN,HEXAGON.....		EA		1	*	*	*		*	145	38
			5310-187-2404	AN960PD1216	<88044>	.WASHER,FLAT.....		HD		1	*	*	*		*	145	
			4730-197-2917	MS24394D8	<96906>	.ELBOW,TUBE.....		EA		1	*	*	*		*	145	
MF	F			S1665-61533-155	<78286>	.TUBE ASSEMBLY,METAL... NOTE 1		EA		1						145	39
			4730-302-8641	MS20819-4D	<96906>	..SLEEVE,FLARED,TUBE FITTING.		EA		2	*	*	*		*	145	41
			5310-656-0094	MS24400-4	<96906>	.NUT,PLAIN,HEXAGON.....		LL		1	*	*	*		*	145	43
			5310-187-2401	AN960PD716	<88044>	.WASHER,FLAT.....		HD		1	*	*	*		*	145	
			4730-725-4351	MS24394D4	<[illegible]>	.ELBOW,TUBE.....		EA		1	*	*	*		*	145	
				S1665-61533-179	<78286>	.TUBE ASSEMBLY.....		EA		1						145	44
			4730-142-2167	AN818-6D	<88044>	..NUT,TUBE COUPLING.....		EA		2	*	*	*		*	145	45
			4730-278-6070	MS20819-6D	<96906>	..SLEEVE,FLARED,TUBE FITTING.		EA		2	*	*	*		*	145	
				S1665-61533-180	<78286>	..TUBE ASSEMBLY.....		EA		1						145	
			5310-282-7817	AN924-6	<96906>	.NUT,PLAIN,HEXAGON.....		EA		1					*	145	48
			5310-187-2402	AN960PD916	<88044>	.WASHER,FLAT.....		HD		1	*	*	*		*	145	
			4730-684-6922	MS24394D6	<96906>	.ELBOW,TUBE.....		EA		1	*	*	*		*	145	
MF	F			S1665-61533-173	<78286>	.TUBE ASSEMBLY.....		EA		1						145	49
						MAKEFR											
						AR 4710-278-8740 TUBE											
						2 EA 4730-277-5358 NUT											
						2 EA 4730-287-1028 SLEEVE											
			4730-287-0290	AN818-10D	<88044>	..NUT,TUBE COUPLING.....		EA		2	*	*	*		*	145	50
			4730-277-5358	MS20819-10D	<96906>	..SLEEVE,FLARED,TUBE FITTING.		EA		2	*	*	*		*	145	51
MF	F			S1665-61533-174	<78286>	..TUBE ASSEMBLY.....		EA		1						145	52
						MAKEFR											
						AR 4710-278-8740 TUBE											
						2 EA 4730-277-5388 SLEEVE											
						2 EA 4730-287-0290 NUT											
			5310-282-7834	MS24400D10	<96906>	.NUT,PLAIN,HEXAGON.....		EA		1	*	*	*		*	145	53
			5310-187-2405	AN960PD1416	<88044>	.WASHER,FLAT.....		EA		1	*	*	*		*	145	
			4730-803-5050	MS24394D10	<96906>	.ELBOW,TUBE.....		EA		1	*	*	*		*	145	
				S1620-66328	<78286>	.BRACKET INSTALLATION.....				1						145	54
P	F		1560-626-7272	S1620-66328-1	<78286>	..BRACKET ASSEMBLY.....		EA		1	*	*	*		*	145	55
						ATTACHING PARTS											
				MS20470AD5	<96906>	..RIVET.....		EA		3						145	
						---*---											
			4730-231-3991	AN821-6	<88044>	.ELBOW,TUBE.....		EA		1	*	*	*		*	145	57
MF	O			S1665-61533-181	<78286>	.TUBE ASSEMBLY.....		EA		1						145	58
						MAKEFR											
						AR 4710-289-2914 TUBE											
						2EA 4730-203-3831 NUT											
			4730-203-3831	AN818-6	<88044>	..NUT,TUBE COUPLING.....		EA		2	*	*	*		*	145	59
			4730-278-0682	MS20819-6	<96906>	..SLEEVE,FLARED,TUBE FITTING.		EA		2	*	*	*		*	145	60
MF	F			S1665-61533-182	<78286>	..TUBE.....		EA		1						145	61
						MAKEFR											
						AR 4710-279-0955 TUBE											
						2 EA 4730-142-2167 NUT											
						2 EA 4730-278-6070 SLEEVE											
				S1665-61533-245	<78286>	.TUBE ASSEMBLY.....		EA		1						145	
			4730-142-2167	AN818-6D	<88044>	..NUT,TUBE COUPLING.....		EA		2	*	*	*		*	145	
			4730-278-6070	MS20819-6D	<96906>	..SLEEVE,FLARED,TUBE FITTING.		EA		2	*	*	*		*	145	
				S1665-61533-246	<78286>	..TUBE.....		EA		1						145	

(1) SOURCE, MAINT AND REC CODE (a) SOURCE CODE	(b) MAINT LEVEL	(c) REC CODE	(2) FEDERAL STOCK NUMBER	REFERENCE NUMBER		(3) DESCRIPTION	MODELS USABLE ON CH-34C	(4) UNIT OF ISSUE	(5) QTY INC IN UNIT PACK	(6) QTY INC N UNIT	(7) 30-DAY DS GS MAINT ALW (a) 1-20	(b) 21-50	(c) 51-100	(8) 1-YR ALW PER 100 EQUIP CNTGCY	(9) DEPOT MAINT ALW PER 100 EQUIP	(10) ILLUSTRATION (a) FIG NO	(b) ITEM NO
			5310-282-7817	AN924-6	<88044>	.NUT,PLAIN,HEXAGON.....		EA		1					*	145	66
			5310-187-2402	AN960PD916	<88044>	.WASHER,FLAT.....		HD		1	*	*	*		*	145	
			4730-801-2369	MS24396-6	<96906>	.ELBOW,TUBE.....		EA		1	*	*	*		*	145	
MF	F			S1665-61533-159	<78286>	.TUBE ASSEMBLY.....NOTE 1		EA		1						145	67
			4730-287-0289	AN818-4D	<88044>	..NUT,TUBE COUPLING.....		EA		2	*	*	*		*	145	68
			4730-302-8641	MS20819-4D	<96906>	..SLEEVE,FLARED,TUBE FITTING.		EA		2	*	*	*		*	145	69
MF	F			S1665-61533-160	<78286>	..TUBE.....		EA		1						145	70
						MAKEFR											
						AR 4710-278-6398 TUBE											
AF	F			S1665-61533-41	<78286>	.TUBE ASSEMBLY.....		EA		1						145	71
			4730-287-0289	AN818-4D	<88044>	..NUT,TUBE COUPLING.....		EA		2	*	*	*		*	145	72
			4730-302-8641	MS20819-4D	<96906>	..SLEEVE,FLARED,TUBE FITTING.		EA		2	*	*	*		*	145	73
MF	F			S1665-61533-42	<78286>	..TUBE.....		EA		1						145	74
						MAKEFR											
						AR 4710-279-0958 TUBE											
MF	F			S1665-61533-29	<78286>	.TUBE ASSEMBLY.....		EA		1	*	*	*		*	145	75
						MAKEFR											
						2 EA 4730-287-0289 NUT											
						2 EA 4730-302-8641 SLEEVE											
						AR 4710-278-6398 TUBE											
			4730-287-0289	AN818-4D	<88044>	..NUT,TUBE COUPLING.....		EA		2	*	*	*		*	145	76
			4730-302-8641	MS20819-4D	<96906>	..SLEEVE,FLARED,TUBE FITTING.		EA		2	*	*	*		*	145	77
MF	F			S1665-61533-30	<78286>	..TUBE.....NOTE 1		EA		1						145	78
				S1665-61533-151	<78286>	.TUBE ASSEMBLY.....		EA		1						145	79
			4730-287-0289	AN818-4D	<88044>	..NUT,TUBE COUPLING.....		EA		2	*	*	*		*	145	80
			4730-302-8641	MS20819-4D	<96906>	..SLEEVE,FLARED,TUBE FITTING.		EA		2	*	*	*		*	145	81
MF	F			S1665-61533-185	<78286>	.TUBE ASSEMBLY.....NOTE 1		EA		1						145	83
			4730-287-0289	AN818-4D	<88044>	..NUT,TUBE COUPLING.....		EA		2	*	*	*		*	145	
			4730-302-8641	MS20819-4D	<96906>	..SLEEVE,FLARED,TUBE FITTING.		EA		2	*	*	*		*	145	
MF	F			S1665-61533-186	<78286>	..TUBE.....NOTE 1		EA		1						145	86
			4730-834-9560	MS24392D4	<96906>	.NIPPLE,TUBE.....		EA		1	REF	REF	REF	REF	*	145	87
MF	F			S1665-61533-201	<78286>	.TUBE ASSEMBLY.....NOTE 1		EA		1						145	88
			4730-287-0289	AN818-4D	<88044>	..NUT,TUBE COUPLING.....		EA		2	*	*	*		*	145	89
			4730-302-8641	MS20819-4D	<96906>	..SLEEVE,FLARED,TUBE FITTING.		EA		2	*	*	*		*	145	90
MF	F			S1665-61533-202	<78286>	..TUBE.....NOTE 1		EA		1						145	91
			4730-720-3960	MS24401D8	<96906>	.ELBOW,TUBE.....		EA		1	*	*	*		*	145	92
MF	F			S1665-61533-139	<78286>	.TUBE ASSEMBLY.....NOTE 1		EA		1						145	93
			4730-287-0288	AN818-8D	<88044>	..NUT,TUBE COUPLING.....		EA		2	*	*	*		*	145	94
			4730-277-5373	MS20819-8D	<96906>	..SLEEVE,FLARED,TUBE FITTING.		EA		2	*	*	*		*	145	95
				S1665-61533-141	<78286>	.TUBE ASSEMBLY.....		EA		1						145	97
			4730-287-0288	AN818-8D	<88044>	..NUT,TUBE COUPLING.....		EA		2	*	*	*		*	145	98
			4730-277-5373	MS20819-8D	<96906>	..SLEEVE,FLARED,TUBE FITTING.		EA		2	*	*	*		*	145	99
MF	F			S1665-61533-142	<78286>	..TUBE.....NOTE 1		EA		1						145	100
			5310-282-7835	MS24400D8	<96906>	.NUT,PLAIN,HEXAGON.....		AX		1	*	*	*		*	145	101
			5310-187-2404	AN960PD1216	<88044>	.WASHER,FLAT.....		HD		1	*	*	*		*	145	
			4730-804-1932	MS24396D8	<96906>	.ELBOW,TUBE.....		EA		1	*	*	*		*	145	
			4730-722-7212	MS24401D4	<96906>	.ELBOW,TUBE.....		EA		1	*	*	*		*	145	102
				S1665-61533-153	<78286>	.TUBE ASSEMBLY.....		EA		1						145	103
			4730-287-0289	AN818-4D	<88044>	..NUT,TUBE COUPLING.....		EA		2	*	*	*		*	145	104
			4730-302-8641	MS20819-4D	<96906>	..SLEEVE,FLARED,TUBE FITTING.		EA		2	*	*	*		*	145	105
			4730-834-9560	MS24392D4	<96906>	.NIPPLE,TUBE.....		EA		1	REF	REF	REF	REF	*	145	107
			5330-805-2966	MS28778-4	<96906>	.PACKING,PREFORMED.....		EA		1	REF	REF	REF	REF	*	145	

(1) SOURCE, MAINT AND REC CODE (a) SOURCE CODE	(b) MAINT LEVEL	(c) REC CODE	(2) FEDERAL STOCK NUMBER	REFERENCE NUMBER	(3) DESCRIPTION	MODELS USABLE ON CH-34C	(4) UNIT OF ISSUE	(5) QTY INC IN UNIT PACK	(6) QTY INC IN UNIT	(7) 30-DAY DS GS MAINT ALW (a) 1-20	(b) 21-50	(c) 51-100	(8) 1-YR ALW PER 100 EQUIP CNTGCY	(9) DEPOT MAINT ALW PER 100 EQUIP	(10) ILLUSTRATION (a) FIG NO	(b) ITEM NO
			4730-194-1044	MS24401D10	<96906> .ELBOW,TUBE.....		EA		1	*	*	*		*	145	108
				S1665-61533-171	<78286> .TUBE ASSEMBLY.....		EA		1						145	109
			4730-287-0290	AN818-10D	<88044> ..NUT,TUBE COUPLING.....		EA		2	*	*	*		*	145	110
			4730-277-5358	MS20819-10D	<96906> ..SLEEVE,FLARED,TUBE FITTING.		EA		2	*	*	*		*	145	111
MF	F			S1665-61533-172	<78286> ..TUBE.....		EA		1						145	112
					MAKEFR											
					AR 4710-278-8740 TUBE											
					2 EA 4730-277-5388 SLEEVE											
					2 EA 4730-287-0290 NUT											
				S1665-61533-169	<78286> .TUBE ASSEMBLY.....		EA		1						145	
			4730-287-0290	AN818-10D	<88044> ..NUT,TUBE COUPLING.....		EA		2	*	*	*		*	145	
			4730-277-5358	MS20819-10D	<96906> ..SLEEVE,FLARED,TUBE FITTING.		EA		2	*	*	*		*	145	115
MF	F			S1665-61533-170	<78286> ..TUBE.....		EA		1						145	116
					MAKEFR											
					AR 4710-278-8740 TUBE											
					2 EA 4730-277-5388 SLEEVE											
					2 EA 4730-278-0290 NUT											
			5310-282-7834	MS24400D10	<96906> .NUT,PLAIN,HEXAGON.....		EA		1	*	*	*		*	145	117
			5310-187-2405	AN960PD1416	<88044> .WASHER,FLAT.....		EA		1	*	*	*		*	145	
			4730-278-3122	MS24396D10	<96906> .ELBOW,TUBE.....		EA		1	*	*	*		*	145	
MF	F			S1665-61533-85	<78286> .TUBE ASSEMBLY.....NOTE 1		EA		1						145	118
			4730-287-0289	AN818-4D	<88044> ..NUT,TUBE COUPLING.....		EA		2	*	*	*		*	145	119
			4730-302-8641	MS20819-4D	<96906> ..SLEEVE,FLARED,TUBE FITTING.		EA		2	*	*	*		*	145	120
MF	F			S1665-61533-86	<78286> ..TUBE.....NOTE 1		EA		1						145	121
			4730-722-7212	MS24401D4	<96906> .ELBOW,TUBE.....		EA		1	*	*	*		*	145	122
MF	F			S1665-61533-193	<78286> .TUBE ASSEMBLY.....NOTE 1		EA		1						145	123
			4730-287-0289	AN818-4D	<88044> ..NUT,TUBE COUPLING.....		EA		2	*	*	*		*	145	124
			4730-302-8641	MS20819-4D	<96906> ..SLEEVE,FLARED,TUBE FITTING.		EA		2	*	*	*		*	145	125
MF	F			S1665-61533-194	<78286> ..TUBE..... NOTE 1		EA		1						145	126
			4730-722-1207	MS24402D4	<96906> .TEE,TUBE.....		EA		1	*	*	*		*	145	127
MF	O			S1665-61533-191	<78286> .TUBE ASSEMBLY.....NOTE 1		EA		1						145	128
			4730-287-0289	AN818-4D	<88044> ..NUT,TUBE COUPLING.....		EA		2	*	*	*		*	145	
			4730-302-8641	MS20819-4D	<96906> ..SLEEVE,FLARED,TUBE FITTING.		EA		2	*	*	*		*	145	
MF	F			S1665-61533-192	<78286> ..TUBE..... NOTE 1		EA		1						145	131
			4720-595-2435	AN6270-4-9 1-2	<88044> .HOSE ASSEMBLY,RUBBER.....										145	
					RPL-BY 4720-522-8978											
MF	O			4720EG003-4C0100	<81996> .HOSE ASSEMBLY,.....		EA		1						145	132
					TETRAFLUOROETHYLENE NOTE 1											
					RPLS-- 4720-595-2435											
MF	F			S1665-61533-189	<78286> .TUBE ASSEMBLY.....NOTE 1		EA		1						145	133
			4730-287-0289	AN818-4D	<88044> ..NUT,TUBE COUPLING.....		EA		2	*	*	*		*	145	
			4730-302-8641	MS20819-4D	<96906> ..SLEEVE,FLARED,TUBE FITTING.		EA		2	*	*	*		*	145	
MF	F			S1665-61533-190	<78286> ..TUBE.....NOTE 1		EA		1						145	136
			5310-282-7823	MS24400D4	<96906> .NUT,PLAIN,HEXAGON.....		LL		1	*	*	*		*	145	137
			5310-187-2401	AN960PD716	<88044> .WASHER,FLAT.....		HD		1	*	*	*		*	145	
			4730-720-4984	MS24390D4	<96906> .TEE,TUBE.....		EA		1	*	*	*		*	145	
MF	F			S1665-61533-161	<78286> .TUBE ASSEMBLY.....		EA		1						145	138
					MAKEFR											
					AR 4710-279-0948 TUBE											
					2 EA 4730-277-5373 SLEEVE											
					2 EA 4730-287-0288 NUT											
			4730-287-0288	AN818-8D	<88044> ..NUT,TUBE COUPLING.....		EA		2	*	*	*		*	145	

(1) SOURCE, MAINT AND REC CODE (a) SOURCE CODE	(b) MAINT LEVEL	(c) PIC CODE	(2) FEDERAL STOCK NUMBER	REFERENCE NUMBER		(3) DESCRIPTION	MODELS USABLE ON CH-34C	(4) UNIT OF ISSUE	(5) QTY INC IN UNIT PACK	(6) QTY INC IN UNIT	(7) 30-DAY DS GS MAINT ALW (a) 1-20	(b) 21-50	(c) 51-100	(8) 1-YR ALW PER 100 EQUIP CNTGCY	(9) DEPOT MAINT ALW PER 100 EQUIP	(10) ILLUSTRATION (a) FIG NO	(b) ITEM NO
			4730-277-5373	MS20819-8D	<96906>	..SLEEVE,FLARED,TUBE FITTING.		EA		2	*	*	*		*	145	
MF	F			S1665-61533-162	<78286>	..TUBE.....		EA		1						145	141
						MAKEFR											
						AR 4710-279-0948 TUBE											
			4730-684-6915	MS24392D8	<96906>	.NIPPLE,TUBE.....		EA		1	*	*	REF	REF	*	145	142
			5330-808-0794	MS28778-8	<96906>	.PACKING,PREFORMED.....		EA		1	REF	REF	REF		*	145	
MF	F			S1665-61533-47	<78286>	.TUBE ASSEMBLY.....		EA		1						145	143
						MAKEFR											
						2 EA 4730-287-0288 NUT											
						2 EA 4730-277-5373 SLEEVE											
						AR 4710-279-0948 TUBING											
			4730-287-0288	AN818-8D	<88044>	..NUT,TUBE COUPLING.....		EA		2	*	*	*		*	145	144
			4730-277-5373	MS20819-8D	<96906>	..SLEEVE,FLARED,TUBE FITTING.		EA		2	*	*	*		*	145	145
MF	F			S1665-61533-48	<78286>	..TUBE.....NOTE 1		EA		1						145	146
P	O		1560-674-6984	S1665-20058-111	<78286>	.HOSE ASSEMBLY,RUBBER.....		EA		1	*	2	2		*	145	147
MF	F			S1665-61533-147	<78286>	.TUBE ASSEMBLY.....		EA		1	*	*	*		*	145	148
						MAKEFR											
						2 EA 4730-287-0288 NUT											
						2 EA 4730-277-5373 SLEEVE											
						AR 4710-279-0948 TUBING											
			4730-287-0288	AN818-8D	<88044>	..NUT,TUBE COUPLING.....		EA		2	*	*	*		*	145	149
			4730-277-5373	MS20819-8D	<96906>	..SLEEVE,FLARED,TUBE FITTING.		EA		2	*	*	*		*	145	150
			4730-684-6915	MS24392D8	<96906>	.NIPPLE,TUBE.....		EA		1	*	*	REF	REF	*	145	152
			5330-808-0794	MS28778-8	<96906>	.PACKING,PREFORMED.....		EA		1	REF	REF	REF		*	145	
MF	O		4720-778-8881	4720EG002-4C0050	<81996>	.HOSE ASSEMBLY.....		EA		1	*	*	*		*	145	153
						TETRAFLUOROETHYLENE											
						MAKEFR											
						AR 4720-857-1732 HOSE											
						2 EA 4730-952-5532 ADAPTER											
						2 EA 4730-967-9513 NUT											
						2 EA 4730-967-9521 SLEEVE											
						2 EA 4730-999-3390 NIPPLE											
						2 EA 5340-726-3009 DUST PLUG											
			4730-277-6371	AN6289D4	<88044>	.LOCKNUT,TUBE FITTING.....		EA		1	*	*	*		*	145	154
			5330-805-2966	MS28778-4	<96906>	.PACKING,PREFORMED.....		EA		1	REF	REF	REF	REF	*	145	
			5330-186-4947	MS28777-4	<96906>	.WASHER,NONMETALLIC.....		LL		1	*	*	*		*	145	
			4730-803-5049	MS24396D4	<96906>	.ELBOW,TUBE.....		EA		1	*	*	*		*	145	
P	F		1560-627-2161	S1665-61819	<78286>	.BRACKET,SERVO AUTO UNIT.....		EA		1	*	*	*		*	145	155
						ATTACHING PARTS											
				NK526-1032-6	<02615>	.SCREW.....		EA		2						145	
			5310-167-0753	AN960PD10L	<88044>	.WASHER,FLAT.....		HD		2	*	*	*		*	145	
						---*---											
			5330-805-2966	MS28778-4	<96906>	.PACKING,PREFORMED.....		EA		1	REF	REF	REF	REF	*	145	157
			4730-837-0856	MS24391D4L	<96906>	.PLUG,MACHINE THREAD.....		EA		1	*	*	*	REF	*	145	
P	F		1560-627-2160	S1665-61618	<78286>	.BRACKET,SERVO AUTO PILOT....		EA		1	*	*	*		REF	145	158
						ATTACHING PARTS											
				NK526-1032-6	<02615>	.SCREW.....		EA		2						145	
			5310-167-0753	AN960PD10L	<88044>	.WASHER,FLAT.....		HD		2	*	*	*		*	145	
						---*---											
MF	F			S1665-61533-145	<78286>	.TUBE ASSEMBLY.....		EA		1	*	*	*		*	145	160
						MAKEFR											
						2 EA 4730-282-0288 NUT											

(1) SOURCE, MAINT AND REC CODE (a) SOURCE	(b) MAINT	(c) REC	(2) FEDERAL STOCK NUMBER	REFERENCE NUMBER	(3) DESCRIPTION	MODELS USABLE ON CH-34C	(4) UNIT OF ISSUE	(5) QTY INC IN UNIT PACK	(6) QTY INC IN UNIT	(7) 30-DAY DS GS MAINT ALW (a) 1-20	(b) 21-50	(c) 51-100	(8) 1-YR ALW PER 100 EQUIP CNTGCY	(9) DEPOT MAINT ALW PER 100 EQUIP	(10) ILLUSTRATION (a) FIG NO	(b) ITEM NO
					CONTINUED										145	160
					2 EA 4730-277-5373 SLEEVE											
					AR 4710-279-0948 TUBING											
			4730-287-0288	AN818-8D <88044>	..NUT,TUBE COUPLING.....		EA		2	*	*	*		*	145	161
			4730-277-5373	MS20819-8D <96906>	..SLEEVE,FLARED,TUBE FITTING.		EA		2	*	*	*		*	145	162
			4730-684-6915	MS24392D8 <96906>	.NIPPLE,TUBE.....		EA		1	*	*	REF	REF	*	145	164
			5330-808-0794	MS28778-8 <96906>	.PACKING,PREFORMED.....		EA		1	REF	REF	REF		*	145	
MF	F			S1665-61533-163 <78286>	.TUBE ASSEMBLY.....		EA		1						145	165
					MAKEFR											
					2 EA 4730-287-0288 NUT											
					2 EA 4730-267-5373 SLEEVE											
					AR 4710-279-0948 TUBING											
			4730-287-0288	AN818-8D <88044>	..NUT,TUBE COUPLING.....		EA		2	*	*	*		*	145	166
			4730-277-5373	MS20819-8D <96906>	..SLEEVE,FLARED,TUBE FITTING.		EA		2	*	*	*		*	145	167
MF	F			S1665-61533-164 <78286>	..TUBE.....		EA		1						145	168
					MAKEFR											
					AR 4710-279-0948 TUBE											
					2 EA 4730-287-0288 NUT											
					2 EA 4730-287-5373 SLEEVE											
			4730-684-6915	MS24392D8 <96906>	.NIPPLE,TUBE.....		EA		1	*	*	REF	REF	*	145	169
			5330-808-0794	MS28778-8 <96906>	.PACKING,PREFORMED.....		EA		1	REF	REF	REF		*	145	
AF	F			S1665-61782-1 <78286>	.PANEL ASSEMBLY-AUTOMATIC....		EA		1						145	170
					STABILIZATION SERVO											
					HYDRAULIC SYSTEM USBL EFF											
					56-4313 & SUBSEQUENT SEE											
					FIG.148 FOR BREAKDOWN											
					ATTACHING PARTS											
				NK526-1032-6 <02615>	.SCREW.....		EA		12						145	171
			5310-167-0753	AN960PD10L <88044>	.WASHER,FLAT.....		HD		12	*	*	*		*	145	
					---*---											
MF	F			S1620-61414-5 <78286>	.BRACKET.....		EA		1						145	
					MAKEFR											
					AR 9535-249-5811 AL ALLY SH											
MF	O			4720EG002-4C0130 <81996>	.HOSE ASSEMBLY.....		EA		1						145	172
					TETRAFLUOROETHYLENE											
					MAKEFR											
					AR 4720-857-1732 HOSE											
					2 EA 4730-952-5532 ADAPTER											
					2 EA 4730-967-9514 NUT											
					2 EA 4730-967-9521 SLEEVE											
					2 EA 5340-781-8061 PLUG DUST											
			4730-277-6371	AN6289D4 <88044>	.LOCKNUT,TUBE FITTING.....		EA		1	*	*	*		*	145	173
			5330-805-2966	MS28778-4 <96906>	.PACKING,PREFORMED.....		EA		1	REF	REF	REF	REF	*	145	
			5330-186-4947	MS28777-4 <96906>	.WASHER,NONMETALLIC.....		LL		1	*	*	*		*	145	
			4730-803-5049	MS24396D4 <96906>	.ELBOW,TUBE.....		EA		1	*	*	*		*	145	
P	O		6685-087-8229	7609-37M5-2 <02987>	.TRANSMITTER-PRESSURE.....		EA		1	REF	REF	REF	REF	REF	145	174
					RPLS-- 6685-512-1228,											
					6685-515-4710,											
					6685-526-7881,											
					6685-530-3538,											
					6685-556-8810,											
					6685-585-9346,											

(1) SOURCE, MAINT AND REC CODE (a) SOURCE CODE	(b) MAINT LEVEL	(c) REC CODE	(2) FEDERAL STOCK NUMBER	REFERENCE NUMBER		(3) DESCRIPTION	MODELS USABLE ON CH-34C	(4) UNIT OF ISSUE	(5) QTY INC IN UNIT PACK	(6) QTY INC IN UNIT	(7) 30-DAY DS GS MAINT ALW (a) 1-20	(b) 21-50	(c) 51-100	(8) 1 YR ALW PER 100 EQUIP CNTGCY	(9) DEPOT MAINT ALW PER 100 EQUIP	(10) ILLUSTRATION a. FIG NO	b. ITEM NO
						CONTINUED 6685-663-8559, 6685-663-8566,& 6685-833-3020 ATTACHING PARTS										145	174
			5305-958-4351	MS35207-226	<96906>	.SCREW,MACHINE.....				4					*	145	175
						---*---											
P	F		1560-924-0383	S1665-61524-1	<78286>	.SUPPORT ASSEMBLY.....		EA		1	*	*	*		REF	145	176
						ATTACHING PARTS											
			5305-150-9213	AN502-10-6	<88044>	.SCREW,MACHINE.....		HD		4	*	*	*		*	145	177
			5310-167-0753	AN960PD10L	<88044>	.WASHER,FLAT.....		HD		4	*	*	*		*	145	
						---*---											
P	F		1560-663-2872	S1520-61987	<78286>	..SPRING,HELICAL,EXTENSION...		EA		4	REF	REF	REF		REF	145	178
P	F		1560-627-2157	S1665-61679	<78286>	..ADAPTER ASSEMBLY.....		EA		1	*	*	*		REF	145	179
						ATTACHING PARTS											
			5306-182-2063	AN3H12A	<88044>	..BOLT,MACHINE.....		HD		2	*	*	*		*	145	180
			5310-183-4406	AN960PD10	<88044>	..WASHER,FLAT.....		HD		2	*	*	*		*	145	
			5310-877-5797	MS21044N3	<96906>	..NUT,SELF-LOCKING,HEXAGON...		EA		2	*	*	*		*	145	
						---*---											
			5340-723-2756	NAS43DD3-44	<80205>	..SPACER,SLEEVE.....		EA		2	*	*	*			145	181
P	F		5310-217-1565	S14-35-4401	<78286>	..WASHER,FLAT.....		EA		2	REF	REF	REF		REF	145	182
			4730-277-6371	AN6289D4	<88044>	.LOCKNUT,TUBE FITTING.....		EA		1	*	*	*		*	145	183
			5330-805-2966	MS28778-4	<96906>	.PACKING,PREFORMED.....		EA		1	REF	REF	REF	REF	*	145	
			5330-186-4947	MS28777-4	<96906>	.WASHER,NONMETALLIC.....		LL		1	*	*	*		*	145	
			4730-725-4351	MS24394D4	<96906>	.ELBOW,TUBE.....		EA		1					*	145	
P	O		6685-516-7562	8195-1	<99643>	.DAMPER,FLUID PRESSURE.....		EA		1	*	*	*		REF	145	184
P	F		4330-033-4783	11223-50	<75287>	.FILTER,FLUID,PRESSURE.....		EA		1	*	*	*		REF	145	185
P	F		1560-339-9578	S1665-61548	<78286>	.MANIFOLD,FLUID,AIRCRAFT.....		EA		1	*	*	*		REF	145	186
						ATTACHING PARTS											
				NK501-10-40	<02615>	.SCREW.....		EA		4						145	
						---*---											
						NOTE 1											
						MAKEFR											
						AR 4710-278-6398 TUBE											
						2 EA 4730-287-0289 NUT											
						2 EA 4730-302-8641 SLEEVE											
				S1665-61531	<78286>	AUTOMATIC STABILIZATION..... SERVO HYDRAULIC SYSTEM PANEL AND CASING INSTALLATION USBL EFF 53-4475 THRU 56-4312 SEE FIG.144 FOR NHA										146	
			5305-984-6191	MS35206-243	<96906>	.SCREW,MACHINE.....		HD		1	2	2	4		*	146	2
			5310-167-0816	AN960-6	<88044>	.WASHER,FLAT.....		HD		1	*	*	*		*	146	
			5310-811-3494	MS21044N08	<96906>	.NUT,SELF-LOCKING,HEXAGON....		EA		1	*	*	*		*	146	

(1) SOURCE, MAINT AND REC CODE (a) SOURCE CODE	(b) MAINT LEVEL	(c) REC CODE	(2) FEDERAL STOCK NUMBER	REFERENCE NUMBER	(3) DESCRIPTION	MODELS USABLE ON CH-34C	(4) UNIT OF ISSUE	(5) QTY INC IN UNIT PACK	(6) QTY INC IN UNIT	(7) 30-DAY DS GS MAINT ALW (a) 1-20	(b) 21-50	(c) 51-100	(8) 1-YR ALWPER 100 EQUIP CNTGCY	(9) DEPOT MAINT ALWPER 100 EQUIP	(10) ILLUSTRATION (a) FIG NO	(b) ITEM NO
P	F		1560-570-4855	S1620-61824	<78286> .COVER ASSEMBLY,SERVO..... AUTOMATIC PILOT		EA		1	*	*	*		*	146	3
P	F		1650-731-8902	S1665-20088	<78286> ..PLATE,INSTRUCTION.....		EA		1	*	*	*		*	146	4
X2	F			S1620-61823	<78286> .CASING ASSEMBLY,SERVO..... AUTOMATIC PILOT ATTACHING PARTS		EA		1						146	5
			5305-984-6191	MS35206-243	<96906> .SCREW,MACHINE.....		HD		24	REF	REF	REF		*	146	6
			5305-286-0213	AN525-832R10	<88044> .SCREW,MACHINE.....		HD		2	*	*	*		*	146	7
			5310-184-8966	AN960PD8	<88044> .WASHER,FLAT.....		HD		2	*	*	*		*	146	
			5310-9[illegible]-1[illegible]72	MS21045[illegible]081	<96906> .NUT,SELF-LOCKING,HEXAGON....		EA		2					*	146	
					---*---											
			5340-580-5787	NAS43HT3-12	<80205> .SPACER.....		EA		2					*	146	8
X2	F			S1665-61522	<78286> .BRACKET ASSEMBLY,SERVO..... AUTOMATIC PILOT ATTACHING PARTS		EA		1						146	9
			5306-182-2058	AN3H5A	<88044> .BOLT,MACHINE.....		EA		1	*	*	*		*	146	10
			5306-182-2057	AN3H4A	<88044> .BOLT,MACHINE.....		HD		2	*	*	*		*	146	11
					---*---											
MF	F			S1665-61533-7	<78286> .TUBE ASSEMBLY..... MAKEFR AR 4710-279-0948 TUBE 2 EA 4730-277-5373 SLEEVE 2 EA 4730-287-0288 NUT		EA		1						146	12
			4730-287-0288	AN818-8D	<88044> ..NUT,TUBE COUPLING.....		EA		2	*	*	*		*	146	
			4730-277-5373	MS20819-8D	<96906> ..SLEEVE,FLARED,TUBE FITTING.		EA		2	*	*	*		*	146	
MF	F			S1665-61533-5	<78286> .TUBE ASSEMBLY..... MAKEFR AR 4710-279-0948 TUBE 2 EA 4730-277-5373 SLEEVE 2 EA 4730-287-0288 NUT		EA		1						146	16
			4730-287-0288	AN818-8D	<88044> ..NUT,TUBE COUPLING.....		EA		2	*	*	*		*	146	
			4730-277-5373	MS20819-8D	<96906> ..SLEEVE,FLARED,TUBE FITTING.		EA		2	*	*	*		*	146	
MF	F			S1665-61533-57	<78286> .TUBE ASSEMBLY..... MAKEFR AR 4710-279-0948 TUBE 2 EA 4730-277-5373 SLEEVE 2 EA 4730-282-0288 NUT		EA		1						146	20
			4730-287-0288	AN818-8D	<88044> ..NUT,TUBE COUPLING.....		EA		2	*	*	*		*	146	
			4730-277-5373	MS20819-8D	<96906> ..SLEEVE,FLARED,TUBE FITTING.		EA		2	*	*	*		*	146	
MF	F			S1665-61533-69	<78286> .TUBE ASSEMBLY..... MAKEFR AR 4710-278-8726 TUBE 2 EA 4730-142-2167 NUT 2 EA 4730-278-6070 SLEEVE		EA		1						146	24
			4730-142-2167	AN818-6D	<88044> ..NUT,TUBE COUPLING.....		EA		2	*	*	*		*	146	
			4730-278-6070	MS20819-6D	<96906> ..SLEEVE,FLARED,TUBE FITTING.		EA		2	*	*	*		*	146	
MF	F			S1665-61533-9	<78286> .TUBE ASSEMBLY..... MAKEFR AR 4710-279-0955 TUBE 2 EA 4730-142-2167 NUT 2 EA 4730-278-6070 SLEEVE		EA		1						146	28
			4730-142-2167	AN818-6D	<88044> ..NUT,TUBE COUPLING.....		EA		2	*	*	*		*	146	

(1) SOURCE, MAINT AND REC CODE (a) SOURCE CODE	(b) MAINT LEVEL	(c) REC CODE	(2) FEDERAL STOCK NUMBER	REFERENCE NUMBER		(3) DESCRIPTION	MODELS USABLE ON CH-34C	(4) UNIT OF ISSUE	(5) QTY INC IN UNIT PACK	(6) QTY INC IN UNIT	(7) 30-DAY DS GS MAINT ALW (a) 1-20	(b) 21-50	(c) 51-100	(8) 1-YR ALWPER 100 EQUIP CNTGCY	(9) DEPOT MAINT ALWPER 100 EQUIP	(10) ILLUSTRATION (a) FIG NO	(b) ITEM NO
			4730-278-6070	MS20819-6D	<96906>	..SLEEVE,FLARED,TUBE FITTING.		EA		2	*	*	*		*	146	
MF	F			S1665-61533-71	<78286>	.TUBE ASSEMBLY.....		EA		1						146	32
						MAKEFR											
						AR 4710-278-8740 TUBE											
						2 EA 4730-277-5358 NUT											
						2 EA 4730-287-1028 SLEEVE											
			4730-287-0290	AN818-10D	<88044>	..NUT,TUBE COUPLING.....		EA		2	*	*	*		*	146	
			4730-277-5358	MS20819-10D	<96906>	..SLEEVE,FLARED,TUBE FITTING.		EA		2	*	*	*		*	146	
MF	F			S1665-61533-72	<78286>	..TUBE.....		EA		1						146	35
						MAKEFR											
						AR 4710-279-0955 TUBE											
						2 EA 4730-277-5358 SLEEVE											
						2 EA 4730-287-0290 NUT											
AF	F			S1620-61822	<78286>	.CASING ASSEMBLY,SERVO.....		EA		1						146	36
						AUTOMATIC PILOT											
						ATTACHING PARTS											
			5306-182-2056	AN3H3A	<88044>	.BOLT,MACHINE.....		HD		2	*	*	*		*	146	37
						---*---											
			5310-656-0094	MS24400-4	<96906>	..NUT,PLAIN,HEXAGON.....		LL		1	*	*	*		*	146	38
			5310-167-0805	AN960C716	<88044>	..WASHER,FLAT.....		HD		2	*	*	*		*	146	
				S1620-61822-2	<78286>	..ELBOW,TUBE.....		EA		1						146	
AF	F			S1665-61520	<78286>	.PANEL ASSEMBLY-AUTOMATIC....		EA		1						146	40
						STABILIZATION SERVO											
						HYDRAULIC SYSTEM USBL											
						EFF 53-4554 THRU 56-4312											
						SEE FIG.147 FOR BREAKDOWN											
						PANEL ASSEMBLY-AUTOMATIC.....										147	
						STABILIZATION SERVO											
						HYDRAULIC SYSTEM USBL EFF											
						53-4554 THRU 56-4312											
AF	F			S1665-61520	<78286>	PANEL ASSEMBLY-AUTOMATIC.....		EA								147	
						STABILIZATION SERVO											
						HYDRAULIC SYSTEM USBL EFF											
						53-4554 THRU 56-4312											
						SEE FIG.146 FOR NHA											
MF	O			S1665-61533-63	<78286>	.TUBE ASSEMBLY,AUTO PILOT....		EA		1						147	1
						MAKEFR											
						AR 4710-278-8726 TUBE											
						2 EA 4730-142-2167 NUT											
						2 EA 4730-278-6070 SLEEVE											
			4730-142-2167	AN818-6D	<88044>	..NUT,TUBE COUPLING.....		EA		2	*	*	*		*	147	
			4730-278-6070	MS20819-6D	<96906>	..SLEEVE,FLARED TUBE FITTING.		EA		2	*	*	*		*	147	
MF	F			S1665-61533-64	<78286>	..TUBE ASSEMBLY,METAL.....		EA		1						147	4
						MAKEFR											
						AR 4710-279-0958 TUBE											
MF	O			S1665-61533-59	<78286>	..TUBE ASSEMBLY,AUTO PILOT...		EA		1						147	5

(1) SOURCE MAINT AND REC CODE (a)	(b)	(c)	(2) FEDERAL STOCK NUMBER	REFERENCE NUMBER	(3) DESCRIPTION	MODELS USABLE ON CH-34C	(4) UNIT OF ISSUE	(5) QTY INC IN UNIT PACK	(6) QTY NO TO ISSUE	(7) 30-DAY DS CS MAINT ALW (a) 1-20	(b) 21-50	(c) 51-100	(8) 1-YR ALW PER 100 EQUIP CNTGCY	(9) DEPOT MAINT ALW PER 100 EQUIP	(10) ILLUSTRATION (a) FIG NO	(b) ITEM NO
					CONTINUED										147	5
					MAKEFR											
					AR 4710-278-8726 TUBE											
					2 EA 4730-142-2167 NUT											
					2 EA 4730-278-6070 SLEEVE											
			4730-142-2167	AN818-6D	<88044> ..NUT,TUBE COUPLING.....		EA		2	*	*	*		*	147	
			4730-278-6070	MS20819-6D	<96906> ..SLEEVE,FLARED TUBE FITTING.		EA		2	*	*	*		*	147	
MF	F			S1665-61533-60	<78286> ..TUBE,SERVO,AUTO PILOT.....		EA		1						147	8
					MAKEFR											
					AR 4710-279-0955 TUBE											
MF	O			S1665-61533-93	<78286> .TUBE ASSEMBLY,AUTO PILOT....		EA		1						147	9
					MAKEFR											
					AR 4710-278-6398 TUBE											
					2 EA 4730-142-2167 NUT											
					2 EA 4730-278-6070 SLEEVE											
			4730-142-2167	AN818-6D	<88044> ..NUT,TUBE COUPLING.....		EA		2	*	*	*		*	147	
			4730-278-6070	MS20819-6D	<96906> ..SLEEVE,FLARED TUBE FITTING.		EA		2	*	*	*		*	147	
MF	F			S1655-61533-94	<78286> ..TUBE,SERVO,AUTO PILOT.....		EA		1						147	12
					MAKEFR											
					AR 4710-279-0958 TUBE											
P	O		1560-768-3771	S1665-61533-11	<78286> .TUBE ASSEMBLY,AUTO PILOT....		EA		1	*	*	*		*	147	13
			4730-277-6371	AN6289D4	<88044> .LOCKNUT,TUBE FITTING.....		EA		1	*	*	*		*	147	14
			5330-805-2966	MS28778-4	<96906> .PACKING,PREFORMED.....		EA		1	REF	REF	REF	REF	*	147	
			5330-186-4947	MS28777-4	<96906> .WASHER,NONMETALLIC.....		LL		1	*	*	*		*	147	
			4730-725-4351	MS24394D4	<96906> .ELBOW,TUBE.....		EA		1					*	147	
P	O		1560-334-6430	S1665-61549	<78286> .MANIFOLD,SERVO,AUTO PILOT...		EA		1	*	*	*		*	147	15
			4730-277-5083	AN6289D6	<88044> .LOCKNUT,TUBE FITTING.....		EA		1	*	*	*		*	147	16
			5330-804-5695	MS28778-6	<96906> .PACKING,PREFORMED.....		EA		2	REF	REF	REF		*	147	
			5330-186-1295	MS28777-6	<96906> .WASHER,NONMETALLIC.....		EA		1	REF	REF	REF		*	147	
			4730-277-6836	AN832-6D	<88044> .NIPPLE,TUBE.....		EA		1	*	*	*		*	147	
			4730-277-5081	AN6289D8	<88044> .LOCKNUT,TUBE FITTING.....		EA		1	*	*	*		*	147	17
			5330-808-0794	MS28778-8	<96906> .PACKING,PREFORMED.....		EA		1	REF	REF	REF		*	147	
			5330-186-1380	MS28777-8	<96906> .WASHER,NONMETALLIC.....		LL		1	*	*	*		*	147	
			4730-197-2917	MS24394D8	<96906> .ELBOW,TUBE.....		EA		1	*	*	*		*	147	
			4730-277-5083	AN6289D6	<88044> .LOCKNUT,TUBE FITTING.....		EA		1	*	*	*		*	147	18
			5330-804-5695	MS28778-6	<96906> .PACKING,PREFORMED.....		EA		1	REF	REF	REF		*	147	
			5330-186-1295	MS28777-6	<96906> .WASHER,NONMETALLIC.....		EA		1	REF	REF	REF		*	147	
			4730-684-6922	MS24394D6	<96906> .ELBOW,TUBE.....		EA		1	*	*	*		*	147	
			4730-805-0680	MS24398D8-6	<96906> .REDUCER,TUBE.....		EA		1	*	*	*		*	147	19
			5330-804-5695	MS28778-6	<96906> .PACKING,PREFORMED.....		EA		1	REF	REF	REF		*	147	
P	O		1650-529-1169	S1565-61831	<78286> .VALVE,SOLENOID.....		EA		1	*	REF	REF		REF	147	20
					ATTACHING PARTS											
			5305-750-9404	AN526-1032R36	<88044> .SCREW,MACHINE.....		EA		2					*	147	21
			5310-167-0753	AN960PD10L	<88044> .WASHER,FLAT.....		HD		4	*	*	*		*	147	
			5310-877-5797	MS21044N3	<96906> .NUT,SELF-LOCKING,HEXAGON....		EA		2	*	*	*		*	147	
					---*---											
			4730-277-6371	AN6289D4	<88044> .LOCKNUT,TUBE FITTING.....		EA		1	*	*	*		*	147	22
			5330-805-2966	MS28778-4	<96906> .PACKING,PREFORMED.....		EA		1	REF	REF	REF	REF	*	147	
			5330-186-4947	MS28777-4	<96906> .WASHER,NONMETALLIC.....		LL		1	*	*	*		*	147	
			4730-725-4351	MS 24394D4	<96906> .ELBOW,TUBE.....		EA		1					*	147	

(1) SOURCE, MAINT AND REC CODE (a) SOURCE CODE	(b) MAINT LEVEL	(c) REC CODE	(2) FEDERAL STOCK NUMBER	REFERENCE NUMBER	(3) DESCRIPTION	MODELS USABLE ON CH-34C	(4) UNIT OF ISSUE	(5) QTY INC IN UNIT PACK	(6) QTY INC IN UNIT	(7) 30-DAY DS GS MAINT ALW (a) 1-20	(b) 21-50	(c) 51-100	(8) 1-YR ALW PER 100 EQUIP CNTGCY	(9) DEPOT MAINT ALW PER 100 EQUIP	(10) ILLUSTRATION (a) FIG NO	(b) ITEM NO
P	O		5930-201-3288	AL58D1113A1	<73760> .SWITCH,PRESSURE.....		EA		1	*	*	*		REF	147	23
					ATTACHING PARTS											
			5305-144-3828	AN520-10R26	<88044> .SCREW,MACHINE.....		HD		2					*	147	24
			5310-167-0753	AN960PD10L	<88044> .WASHER,FLAT.....		HD		4	*	*	*		*	147	
			5310-877-5797	MS21044N3	<96906> .NUT,SELF-LOCKING,HEXAGON....		EA		2	*	*	*		*	147	
					---*---											
			4730-277-5083	AN6289D6	<88044> .LOCKNUT,TUBE FITTING.....		EA		2	*	*	*		*	147	25
			5330-804-5695	MS28778-6	<96906> .PACKING,PREFORMED.....		EA		2	REF	REF	REF		*	147	
			5330-186-1295	MS28777-6	<96906> .WASHER,NONMETALLIC.....		EA		2	REF	REF	REF		*	147	
			4730-684-6922	MS24394D6	<96906> .ELBOW,TUBE.....		EA		2	*	*	*		*	147	
			4730-845-3502	MS24391D8L	<96906> .PLUG,MACHINE THREAD.....		EA		2	REF	REF	REF		*	147	26
			5330-804-5695	MS28778-6	<96906> .PACKING,PREFORMED.....		EA		2	REF	REF	REF		*	147	
P	O		1650-540-4108	AN6200-6AB	<88044> .VALVE,SAFETY RELIEF.....		EA		4	*	*	*	REF	REF	147	27
					ATTACHING PARTS											
			5305-995-3441	MS35207-269	<96906> .SCREW,MACHINE.....		EA		4					*	147	28
			5310-167-0753	AN960PD10L	<88044> .WASHER,FLAT.....		HD		8	*	*	*		*	147	
			5310-877-5797	MS21044N3	<96906> .NUT,SELF-LOCKING,HEXAGON....		EA		4	*	*	*		*	147	
					---*---											
			5340-727-1891	NAS430D3-128	<80205> .SPACER,SLEEVE.....		EA		4	*	*	*		*	147	29
			4730-277-5083	AN6289D6	<88044> .LOCKNUT,TUBE FITTING.....		EA		1	*	*	*		*	147	30
			5330-804-5695	MS28778-6	<96906> .PACKING,PREFORMED.....		EA		1	REF	REF	REF		*	147	
			5330-186-1295	MS28777-6	<96906> .WASHER,NONMETALLIC.....		EA		1	REF	REF	REF		*	147	
			4730-684-6922	MS24394D6	<96906> .ELBOW,TUBE.....		EA		1	*	*	*		*	147	
			4730-277-5083	AN6289D6	<88044> .LOCKNUT,TUBE FITTING.....		EA		1	*	*	*		*	147	31
			5330-804-5695	MS28778-6	<96906> .PACKING,PREFORMED.....		EA		1	REF	REF	REF		*	147	
			5330-186-1295	MS28777-6	<96906> .WASHER,NONMETALLIC.....		EA		1	REF	REF	REF		*	147	
			4730-684-6922	MS24394D6	<96906> .ELBOW,TUBE.....		EA		1	*	*	*		*	147	
			4730-277-5083	AN6289D6	<88044> .LOCKNUT,TUBE FITTING.....		EA		1	*	*	*		*	147	32
			5330-804-5695	MS28778-6	<96906> .PACKING,PREFORMED.....		EA		1	REF	REF	REF		*	147	
			5330-186-1295	MS28777-6	<96906> .WASHER,NONMETALLIC.....		EA		1	REF	REF	REF		*	147	
			4730-684-6922	MS24394D6	<96906> .ELBOW,TUBE.....		EA		1	*	*	*		*	147	
			4730-684-6918	MS24397D12	<96906> .REDUCER,TUBE.....		EA		1	*	*	*		*	147	33
			5330-808-0794	MS28778-8	<96906> .PACKING,PREFORMED.....		EA		1	REF	REF	REF		*	147	
			4730-277-5083	AN6289D6	<88044> .LOCKNUT,TUBE FITTING.....		EA		1	*	*	*		*	147	34
			5330-808-0794	MS28778-8	<96906> .PACKING,PREFORMED.....		EA		1	REF	REF	REF		*	147	
			5330-186-1380	MS28777-8	<96906> .WASHER,NONMETALLIC.....		LL		1	*	*	*		*	147	
			4730-720-4482	MS24389D8	<96906> .TEE,TUBE.....		EA		1	*	*	*		*	147	
			4730-277-5078	AN6289-10D	<88044> .LOCK NUT,TUBE FITTING.....		EA		1	*	*	*		*	147	35
			5330-285-9842	MS28778-10	<96906> .PACKING,PREFORMED.....		EA		1	REF	REF	REF	REF	*	147	
			5330-186-1381	MS28777-10	<96906> .WASHER,NONMETALLIC.....		EA		1	REF	REF	REF		*	147	
			4730-803-5050	MS24394D10	<96906> .ELBOW,TUBE.....		EA		1	*	*	*		*	147	
X2	O			S1665-61523	<78286> .BRACKET ASSEMBLY.....		EA		1						147	36
					ATTACHING PARTS											
			5306-182-2061	AN3H10A	<88044> .BOLT,MACHINE.....		HD		1	*	*	*		*	147	37
			5310-167-0753	AN960PD10L	<88044> .WASHER,FLAT.....		HD		2	*	*	*		*	147	
			5310-877-5797	MS21044N3	<96906> .NUT,SELF-LOCKING,HEXAGON....		EA		1	*	*	*		*	147	
			5306-182-2057	AN3H4A	<88044> .BOLT,MACHINE.....		HD		2	*	*	*		*	147	38
			5310-167-0753	AN960PD10L	<88044> .WASHER,FLAT.....		HD		2	*	*	*		*	147	
					---*---											
AF	F			S1665-61521	<78286> .RESERVOIR ASSEMBLY-AUTOMATIC STABILIZATION SERVO HYDRAULIC SYSTEM USBL EFF		EA		1						147	39

(1) SOURCE, MAINT AND REC CODE (a) SOURCE CODE	(b) MAINT CODE	(c) REC CODE	(2) FEDERAL STOCK NUMBER	REFERENCE NUMBER	(3) DESCRIPTION	MODELS USABLE ON CH-34C	(4) UNIT OF ISSUE	(5) QTY INC IN UNIT PACK	(6) QTY INC IN UNIT	(7) 30-DAY DS GS MAINT ALW (a) 1-20	(b) 21-50	(c) 51-100	(8) 1-YR ALW PER 100 EQUIP CNTGCY	(9) DEPOT MAINT ALW PER 100 EQUIP	(10) ILLUSTRATION (a) FIG NO	(b) ITEM NO
					CONTINUED										147	39
					53-4475 THRU 56-4312											
					SEE FIG.149 FOR BREAKDOWN											
					PANEL ASSEMBLY-AUTOMATIC.....										148	
					STABILIZATION SERVO											
					HYDRAULIC SYSTEM USBL EFF											
					56-4313 AND SUBSEQUENT											
AF	F			S1665-61782-1 <78286>	PANEL ASSEMBLY-AUTOMATIC.....		EA								148	
					STABILIZATION SERVO											
					HYDRAULIC SYSTEM USBL EFF											
					56-4313 AND SUBSEQUENT											
					SEE FIG.145 FOR NHA											
			4730-684-7157	MS24399D7 <96906>	.REDUCER,TUBE.....		EA		1	*	*	*		*	148	1
			5310-638-2605	MS24400D6 <96906>	.NUT,PLAIN,HEXAGON.....		EA		1	*	*	*		*	148	
			5330-804-5695	MS28778-6 <96906>	.PACKING,PREFORMED.....		EA		1	REF	REF	REF		*	148	
			4730-804-8684	MS24389D6 <96906>	.TEE,TUBE.....		EA		1	*	*	*		*	148	
MF	F			S1665-61533-167 <78286>	.TUBE ASSEMBLY.....		EA		1						148	2
					MAKEFR											
					AR 4710-278-8726 TUBE											
					2 EA 4730-142-2167 NUT											
					2 EA 4730-278-6070 SLEEVE											
			4730-142-2167	AN818-6D <88044>	..NUT,TUBE COUPLING.....		EA		2	*	*	*		*	148	
			4730-278-6070	MS20819-6D <96906>	..SLEEVE,FLARED,TUBE FITTING.		EA		2	*	*	*		*	148	
MF	F			S1665-61533-168 <78286>	..TUBE ASSEMBLY.....		EA		1						148	5
					MAKEFR											
					AR 4710-279-0955 TUBE											
					2 EA 4730-142-2167 NUT											
					2 EA 4730-278-6070 SLEEVE											
			4730-277-5083	AN6289D6 <88044>	.LOCKNUT,TUBE FITTING.....		EA		1	*	*	*		*	148	6
			5330-804-5695	MS28778-6 <96906>	.PACKING.....		EA		1	REF	REF	REF		*	148	
			5330-186-1295	MS28777-6 <96906>	.WASHER,NONMETALLIC.....		EA		1	REF	REF	REF		*	148	
			4730-684-6922	MS24394D6 <96906>	.ELBOW,TUBE.....		EA		1	*	*	*		*	148	
MF	F			S1665-61533-165 <78286>	.TUBE ASSEMBLY.....		EA		1						148	7
					MAKEFR											
					AR 4710-278-8726 TUBE											
					2 EA 4730-142-2167 NUT											
					2 EA 4730-278-6070 SLEEVE											
			4730-142-2167	AN818-6D <88044>	..NUT,TUBE COUPLING.....		EA		2	*	*	*		*	148	8
			4730-278-6070	MS20819-6D <96906>	..SLEEVE,FLARED,TUBE FITTING.		EA		2	*	*	*		*	148	9
MF	F			S1665-61533-166 <78286>	..TUBE.....		EA		1						148	10
					MAKEFR											
					AR 4710-279-0955 TUBE											
					2 EA 4730-142-2167 NUT											
					2 EA 4730-278-6070 SLEEVE											
			4730-277-5083	AN6289D6 <88044>	.LOCKNUT,TUBE FITTING.....		EA		1	*	*	*		*	148	11
			5330-804-5695	MS28778-6 <96906>	.PACKING,PREFORMED.....		EA		1	REF	REF	REF		*	148	

(1) SOURCE, MAINT AND REC CODE (a) SOURCE CODE	(b) MAINT LEVEL	(c) REC CODE	(2) FEDERAL STOCK NUMBER	REFERENCE NUMBER		(3) DESCRIPTION	MODELS USABLE ON CH-34C	(4) UNIT OF ISSUE	(5) QTY INC IN UNIT PACK	(6) QTY INC IN UNIT	(7) 30-DAY DS GS MAINT ALW (a) 1-20	(b) 21-50	(c) 51-100	(8) 1-YR ALWPER 100 EQUIP CNTGCY	(9) DEPOT MAINT ALWPER 100 EQUIP	(10) ILLUSTRATION (a) FIG NO	(b) ITEM NO
			5330-186-1295	MS28777-6	<96906>	.WASHER,NONMETALLIC.....		EA		1	REF	REF	REF		*	148	
			4730-725-0100	MS24395D6	<96906>	.TEE,TUBE.....		EA		1	*	*	*		*	148	
			4730-277-5083	AN6289D6	<88044>	.LOCKNUT,TUBE FITTING.....		EA		1	*	*	*		*	148	12
			5330-804-5695	MS28778-6	<96906>	.PACKING,PREFORMED.....		EA		1	REF	REF	REF		*	148	
			5330-186-1295	MS28777-6	<96906>	.WASHER,NONMETALLIC.....		EA		1	REF	REF	REF		*	148	
			4730-684-6922	MS24394D6	<96906>	.ELBOW,TUBE.....		EA		1	*	*	*		*	148	
			4730-845-3502	MS24391D6L	<96906>	.PLUG,MACHINE THREAD.....		EA		2	REF	REF	REF		*	148	13
			5330-804-5695	MS28778-6	<96906>	.PACKING,PREFORMED.....		EA		2	REF	REF	REF		*	148	
MF	F			S1665-61533-143	<78286>	.TUBE ASSEMBLY.....		EA		1						148	14
						MAKEFR											
						AR 4710-279-0948 TUBE											
						2 EA 4730-277-5373 SLEEVE											
						2 EA 4730-287-0288 NUT											
			4730-287-0288	AN818-8D	<88044>	..NUT,TUBE COUPLING.....		EA		2	*	*	*		*	148	15
			4730-277-5373	MS20819-8D	<96906>	..SLEEVE,FLARED,TUBE FITTING.		EA		2	*	*	*		*	148	16
MF	F			S1665-61533-144	<78286>	..TUBE.....		EA		1						148	17
						MAKEFR											
						AR 4710-279-0948 TUBE											
						2 EA 4730-277-5373 SLEEVE											
						2 EA 4730-287-0288 NUT											
			4730-277-5081	AN6289D8	<88044>	.LOCKNUT,TUBE FITTING.....		EA		1	*	*	*		*	148	18
			5330-808-0794	MS28778-8	<96906>	.PACKING,PREFORMED.....		EA		1	REF	REF	REF		*	148	
			5330-186-1380	MS28777-8	<96906>	.WASHER,NONMETALLIC.....		LL		1	*	*	*		*	148	
			4730-197-2917	MS24394D8	<96906>	.ELBOW,TUBE.....		EA		1	*	*	*		*	148	
			4730-805-0680	MS24398D8-6	<96906>	.REDUCER,TUBE.....		EA		1	*	*	*		*	148	
			5330-804-5695	MS28778-6	<96906>	.PACKING,PREFORMED.....		EA		1	REF	REF	REF		*	148	
			4730-277-5081	AN6289D8	<88044>	.LOCKNUT,TUBE FITTING.....		EA		1	*	*	*		*	148	19
			5330-808-0794	MS28778-8	<96906>	.PACKING,PREFORMED.....		EA		1	REF	REF	REF		*	148	
			5330-186-1380	MS28777-8	<96906>	.WASHER,NONMETALLIC.....		LL		1	*	*	*		*	148	
			4730-756-1937	MS24395D8	<96906>	.TEE,TUBE.....		EA		1	*	*	*		*	148	
			4730-805-0680	MS24398D8-6	<96906>	.REDUCER,TUBE.....		EA		1	*	*	*		*	148	
			5330-804-5695	MS28778-6	<96906>	.PACKING,PREFORMED.....		EA		1	REF	REF	REF		*	148	
P	F		1650-540-4108	AN6200-6A8	<88044>	.VALVE,SAFETY,RELIEF.....		EA		1	*	*	*	REF	REF	148	20
						ATTACHING PARTS											
			5306-182-2064	AN3H13A	<88044>	.BOLT,MACHINE.....		HD		2	*	*	*		*	148	21
			5310-183-4406	AN960PD10	<88044>	.WASHER,FLAT.....		HD		2	*	*	*		*	148	
			5310-167-0753	AN960PD10L	<88044>	.WASHER,FLAT.....		HD		2	*	*	*		*	148	
			5310-877-5797	MS21044N3	<96906>	.NUT,SELF-LOCKING,HEXAGON....		EA		2	*	*	*		*	148	
						---*---											
				NAS43DD3-128	<80205>	.SPACER,SLEEVE.....		EA		4						148	22
MF	F			S1665-61533-149	<78286>	.TUBE ASSEMBLY.....		EA		1						148	23
						MAKEFR											
						AR 4710-278-6398 TUBE											
						2 EA 4730-287-0289 NUT											
						2 EA 4730-302-8641 SLEEVE											
			4730-287-0289	AN818-4D	<88044>	..NUT,TUBE COUPLING.....		EA		2	*	*	*		*	148	
			4730-302-8641	MS20819-4D	<96906>	..SLEEVE,FLARED,TUBE FITTING.		EA		2	*	*	*		*	148	
MF	F			S1665-61533-150	<78286>	..TUBE ASSEMBLY.....		EA		1						148	26
						MAKEFR											
						AR 4710-278-6398 TUBE											
						2 EA 4730-287-0289 NUT											
						2 EA 4730-302-8641 SLEEVE											

(1) SOURCE, MAINT AND REC CODE: (a) SOURCE CODE	(b) MAINT LEVEL	(c) REC CODE	(2) FEDERAL STOCK NUMBER	REFERENCE NUMBER	(3) DESCRIPTION	MODELS USABLE ON CH-34C	(4) UNIT OF ISSUE	(5) QTY REQ	(6) QTY REQ UNIT	(7) 30-DAY DS GS MAINT AUTH: (a) 1-20	(b) 21-50	(c) 51-100	(8) 1-YR AUTH 100 EQUIP CONTGCY	(9) DEPOT MAINT AUTHER 10 EQUIP	(10) ILLUSTRATION: (a) FIG NO	(b) ITEM NO
			4730-277-6371	AN6289D4 <88044>	.LOCKNUT,TUBE FITTING.....		EA		1	*	*	*		*	148	27
			5330-805-2966	MS28778-4 <96906>	.PACKING,PREFORMED.....		EA		1	REF	REF	REF	REF	*	148	
			5330-186-4947	MS28777-4 <96906>	.WASHER,NONMETALLIC.....		LL		1	*	*	*		*	148	
			4730-684-6903	MS24395D4 <96906>	.TEE,TUBE.....		EA		1	*	*	*		*	148	
			4730-828-1395	MS24399D10 <96906>	.REDUCER,TUBE.....		EA		1	*	*	*		*	148	28
			5330-808-0794	MS28778-8 <96906>	.PACKING,PREFORMED.....		EA		1	REF	REF	REF		*	148	
			4730-277-5081	AN6289D8 <88044>	.LOCKNUT,TUBE FITTING.....		EA		1	*	*	*		*	148	
			5330-808-0794	MS28778-8 <96906>	.PACKING,PREFORMED.....		EA		1	REF	REF	REF		*	148	
			5330-186-1380	MS28777-8 <96906>	.WASHER,NONMETALLIC.....		LL		1	*	*	*		*	148	
			4730-720-4482	MS24389D8 <96906>	.TEE,TUBE.....		EA		1	*	*	*		*	148	
			4730-805-0680	MS24398D8-6 <96906>	.REDUCER,TUBE.....		EA		1	*	*	*		*	148	
			5330-804-5695	MS28778-6 <96906>	.PACKING,PREFORMED.....		EA		1	REF	REF	REF		*	148	
P	O		1650-529-1169	S1565-61831 <70236>	.VALVE,SOLENOID.....		EA		1	*	REF	REF		REF	148	29
					ATTACHING PARTS											
			5306-182-2011	AN3H22A <88044>	.BOLT,MACHINE.....		HD		2	*	*	*		*	148	30
			5310-183-4406	AN960PD10 <88044>	.WASHER,FLAT.....		HD		2	*	*	*		*	148	
					---*---											
				S1665-61816 <78286>	.SUPPORT ASSEMBLY.....		EA		1						148	31
					ATTACHING PARTS											
			5306-182-2057	AN3H4A <88044>	.BOLT,MACHINE.....		HD		2	*	*	*		*	148	32
			5310-183-4406	AN960PD10 <88044>	.WASHER,FLAT.....		HD		2	*	*	*		*	148	
					---*---											
P	O		5930-201-3288	AL58D1113A1 <73760>	.SWITCH,PRESSURE.....		EA		1	*	*	*		REF	148	33
					ATTACHING PARTS											
			5306-226-8248	AN3DDH14A <88044>	.BOLT,MACHINE.....		EA		2	*	*	*		*	148	34
			5305-144-3828	AN520-10R26 <88044>	.SCREW,MACHINE.....		HD		2					*	148	
			5310-183-4406	AN960PD10 <88044>	.WASHER,FLAT.....		HD		2	*	*	*		*	148	
					---*---											
P	F		1650-633-8513	S14-40-5058 <78286>	.BRACKET,HYDRAULIC.....		EA		1	*	*	*		REF	148	35
					RESERVOIR											
					ATTACHING PARTS											
			5306-182-2057	AN3H4A <88044>	.BOLT,MACHINE.....		HD		1	*	*	*		*	148	36
			5310-183-4406	AN960PD10 <88044>	.WASHER,FLAT.....		HD		2	*	*	*		*	148	
					---*---											
				S1665-61814 <78286>	.SUPPORT ASSEMBLY.....		EA		1						148	37
					ATTACHING PARTS											
			5306-182-2057	AN3H4A <88044>	.BOLT,MACHINE.....		HD		1	*	*	*		*	148	38
			5310-183-4406	AN960PD10 <88044>	.WASHER,FLAT.....		HD		1	*	*	*		*	148	
					---*---											
			4730-277-5078	AN6289-10D <88044>	.LOCKNUT,TUBE FITTING.....		EA		1	*	*	*		*	148	39
			5330-285-9842	MS28778-10 <96906>	.PACKING,PREFORMED.....		EA		1	REF	REF	REF	REF	*	148	
			5330-186-1381	MS28777-10 <96906>	.WASHER,NONMETALLIC.....		EA		1	REF	REF	REF		*	148	
			4730-803-5050	MS24394D10 <96906>	.ELBOW,TUBE.....		EA		1	*	*	*		*	148	
			4730-277-5081	AN6289D8 <88044>	.LOCKNUT,TUBE FITTING.....		EA		1	*	*	*		*	148	40
			5330-808-0794	MS28778-8 <96906>	.PACKING,PREFORMED.....		EA		1	REF	REF	REF		*	148	
			5330-186-1380	MS28777-8 <96906>	.WASHER,NONMETALLIC.....		LL		1	*	*	*		*	148	
			4730-197-2917	MS24394D8 <96906>	.ELBOW,TUBE.....		EA		1	*	*	*		*	148	
AF	F			S1665-61813 <78286>	.TANK,HYDRAULIC FLUID.....		EA		1						148	41
					AIRCRAFT USBL EFF 56-43131/SUBSEQUENT SEE FIG.149 FOR BREAKDOWN											

(1) SOURCE, MAINT AND REC CODE (a) SOURCE CODE	(b) MAINT LEVEL	(c) REC CODE	(2) FEDERAL STOCK NUMBER	REFERENCE NUMBER	(3) DESCRIPTION	MODELS USABLE ON CH-34C	(4) UNIT OF ISSUE	(5) QTY INC IN UNIT PACK	(6) QTY INC IN UNIT	(7) 30-DAY DS GS MAINT ALW (a) 1-20	(b) 21-50	(c) 51-100	(8) 1-YR ALW PER 100 EQUIP CNTGCY	(9) DEPOT MAINT ALW PER 100 EQUIP	(10) ILLUSTRATION (a) FIG NO	(b) ITEM NO
					CONTINUED										148	41
					RESERVOIR ASSEMBLY..... AUTOMATIC STABILIZATION SERVO HYDRAULIC SYSTEM										149	
AF	F			S1665-61521 <78286>	RESERVOIR ASSEMBLY..... AUTOMATIC STABILIZATION SERVO HYDRAULIC SYSTEM USBL EFF 53-4475 THRU 56-4312 SEE FIG.147 FOR NHA		EA								149	
AF	F			S1665-61813 <78286>	TANK,HYDRAULIC FLUID..... AIRCRAFT USBL EFF 56-4313 AND SUBSEQUENT SEE FIG. 148 FOR NHA		EA								149	
P	O		1650-510-2048	S14-40-7004 <78286>	.CAP,FILLER HYDRAULIC.....		EA		1	*	*	*		REF	149	1
X1				S14-40-7005 <78286>	..CAP,FLIGHT CONTROLS..... HYDRAULIC RESERVOIR FILLER WHEN EXHTD RQTN NHA 1650-510-2048		EA		1						149	
				S14-40-7009 <78286>	..CHAIN ASSEMBLY,HYDRAULIC... SYSTEM RESERVOIR FILLER CAP ATTACHING PARTS		EA		1						149	2
			5305-281-8526	AN525-832R6 <88044>	..SCREW,MACHINE..... ---*---		HD		1	*	*	*		*	149	3
			5340-804-2786	MS16625-1125 <96906>	.RING,RETAINER.....		EA		1	*	*	*		*	149	4
P	O		1650-343-4371	S1565-20062 <78286>	.STRAINER ASSEMBLY,SERVO..... RESERVOIR		EA		1	REF	REF	REF		REF	149	5
			4730-684-7157	MS24399D7 <96906>	.REDUCER,TUBE.....		EA		1	*	*	*		*	149	6
			5330-804-5695	MS28778-6 <96906>	.PACKING,PREFORMED.....NOTE 3		EA		1	REF	REF	REF		*	149	7
P	F		1650-694-4669	S1565-20064 <78286>	.ADAPTER,SERVO RESERVOIR.....		EA		1	*	*	*		REF	149	8
P	F		1650-527-6584	S1565-20066 <78286>	.GASKET.....		EA		1	REF	REF	REF		REF	149	9
			5340-804-3893	MS16625-1143 <96906>	.RING,RETAINER.....		EA		1	*	*	*		*	149	10
P	O		1650-024-9665	AN6237-1 <88044>	.FILTER ELEMENT,FLUID,.....		EA		1	REF	REF	REF	REF	REF	149	11
			5340-804-2771	MS16625-1250 <96906>	.RING,RETAINER.....		EA		1	*	*	*		*	149	12
P	F		1650-530-2938	S1565-20065 <78286>	.WINDOW,OBSERVATION.....		EA		1	REF	REF	REF		REF	149	13
			5330-194-3713	AN623086 <88044>	.PACKING,PREFORMED.....NOTE 3		EA		1	*	*	*		*	149	14
P	F		1650-567-1086	S1565-20059-1 <78286>	.TANK,HYDRAULIC FLUID..... ATTACHING PARTS		EA		1	*	*	*		REF	149	16
			5306-182-2063	AN3H12A <88044>	.BOLT,MACHINE.....		HD		3	*	*	*		*	149	17
			5310-183-4406	AN960PD10 <88044>	.WASHER,FLAT.....NOTE 1		HD		6	*	*	*		*	149	
			5310-877-5797	MS21044N3 <96906>	.NUT,SELF-LOCKING,HEXAGON....		EA		3	*	*	*		*	149	
			5310-183-4406	AN960PD10 <88044>	.WASHER,FLAT.....NOTE 2		HD		3	*	*	*		*	149	

(1) SOURCE, MAINT AND REC CODE (a) SOURCE CODE	(b) MAINT LEVEL	(c) REC CODE	(2) FEDERAL STOCK NUMBER	REFERENCE NUMBER	(3) DESCRIPTION	MODELS USABLE ON CH-34C	(4) UNIT OF ISSUE	(5) QTY INC IN UNIT PACK	(6) QTY INC IN UNIT	(7) 30-DAY DS GS MAINT ALW (a) 1-20	(b) 21-50	(c) 51-100	(8) 1 YR ALW PER 100 EQUIP CNTGCY	(9) DEPOT MAINT ALW PER 100 EQUIP	(10) ILLUSTRATION (a) FIG NO	(b) ITEM NO
			5306-182-2064	AN3H13A	<88044> .BOLT,MACHINE.....		HD		1	*	*	*		*	149	18
			5310-183-4406	AN960PD10	<88044> .WASHER,FLAT.....NOTE 1		HD		2	*	*	*		*	149	
			5310-183-4406	AN960PD10	<88044> .WASHER,FLAT.....NOTE 2		HD		1	*	*	*		*	149	
			5310-167-0753	AN960PD10L	<88044> .WASHER,FLAT.....NOTE 1		HD		1	*	*	*		*	149	
			5310-877-5797	MS21044N3	<96906> .NUT,SELF-LOCKING,HEXAGON....		EA		1	*	*	*		*	149	
					---*---											
				S14-40-5058	<78286> .BRACKET,HYDRAULIC..... RESERVOIR ATTACHING PARTS		EA		1						149	19
			5305-145-7016	AN503-10-6	<88044> .SCREW,MACHINE.....		EA		1	*	*	*		*	149	20
			5310-183-4406	AN960PD10	<88044> .WASHER,FLAT.....		HD		1	*	*	*		*	149	
					---*---											
			5330-726-1235	MS29561-261	<96906> .PACKING,PREFORMED.....NOTE 3		EA		2	*	*	*		*	149	21
MF	F			S14-40-7043	<78286> .REFLECTOR,SERVO RESERVOIR... MAKEFR AR 9535-232-0378 AL ALLY SH ATTACHING PARTS		EA		1						149	22
			5305-145-6971	AN503-8-6	<88044> .SCREW,MACHINE.....		HD		2	*	*	*		*	149	23
			5310-184-8966	AN960PD8	<88044> .WASHER,FLAT.....		HD		2	*	*	*		*	149	
					---*---											
P	F		1650-394-0156	S14-40-7103	<78286> .PLATE,FLIGHT CONTROLS..... HYDRAULIC		EA		1	*	*	*		REF	149	24
			5330-726-1235	MS29561-261	<96906> .PACKING,PREFORMED.....NOTE 3		EA		2	*	*	*		*	149	25
			5330-196-6695	AN6238-1	<88044> .WASHER,NONMETALLIC..... NOTE 3		EA		1	REF	REF	REF		*	149	26
P	O		4330-252-0592	AN6236-1	<88044> .FILTER ELEMENT,FLUID..... PRESSURE NOTE 3		EA		1	REF	REF	REF		REF	149	27
			5330-196-6695	AN6238-1	<88044> .WASHER,NONMETALLIC....NOTE 3		EA		1	REF	REF	REF		*	149	28
P	O		1650-692-2524	S14-40-7013	<78286> .VALVE ASSEMBLY.....		EA		1	*	*	*		REF	149	29
			5330-582-2133	MS28775-011	<96906> .PACKING,PREFORMED.....NOTE 3		EA		1	*	*	*		*	149	30
			4730-837-0856	MS24391D4L	<96906> .PLUG,MACHINE THREAD.....		EA		1	*	*	*	REF	*	149	31
			5330-805-2966	MS28778-4	<96906> .PACKING,PREFORMED.....		EA		1	REF	REF	REF	REF	*	149	32
			4730-080-1847	MS24391D5L	<96906> .PLUG,MACHINE THREAD.....		EA		1	*	*	*		*	149	33
			5330-833-7491	MS28778-5	<96906> .PACKING,PREFORMED.....NOTE 3		EA		1	*	REF	REF		*	149	34
P	F		1650-570-0579	S1565-20059-2	<78286> .RESERVOIR ASSEMBLY..... HYDRAULIC SYSTEM SERVO LOWER		EA		1	*	*	*		REF	149	35
P	F		1650-715-2266	S1607-5579-2	<78286> PARTS KIT,HYDRAULIC..... RPLS-- 1650-629-1599 U/O PN S1665-61521 SEE FUNCTIONAL GROUP 50 FOR COMPONENTS NOTE 1 U/O PN S1665-61521 NOTE 2 U/O PN S1665-61813 NOTE 3 COMPONENT OF KIT 1650-715-2266		EA		1	*	2	2		*	149	

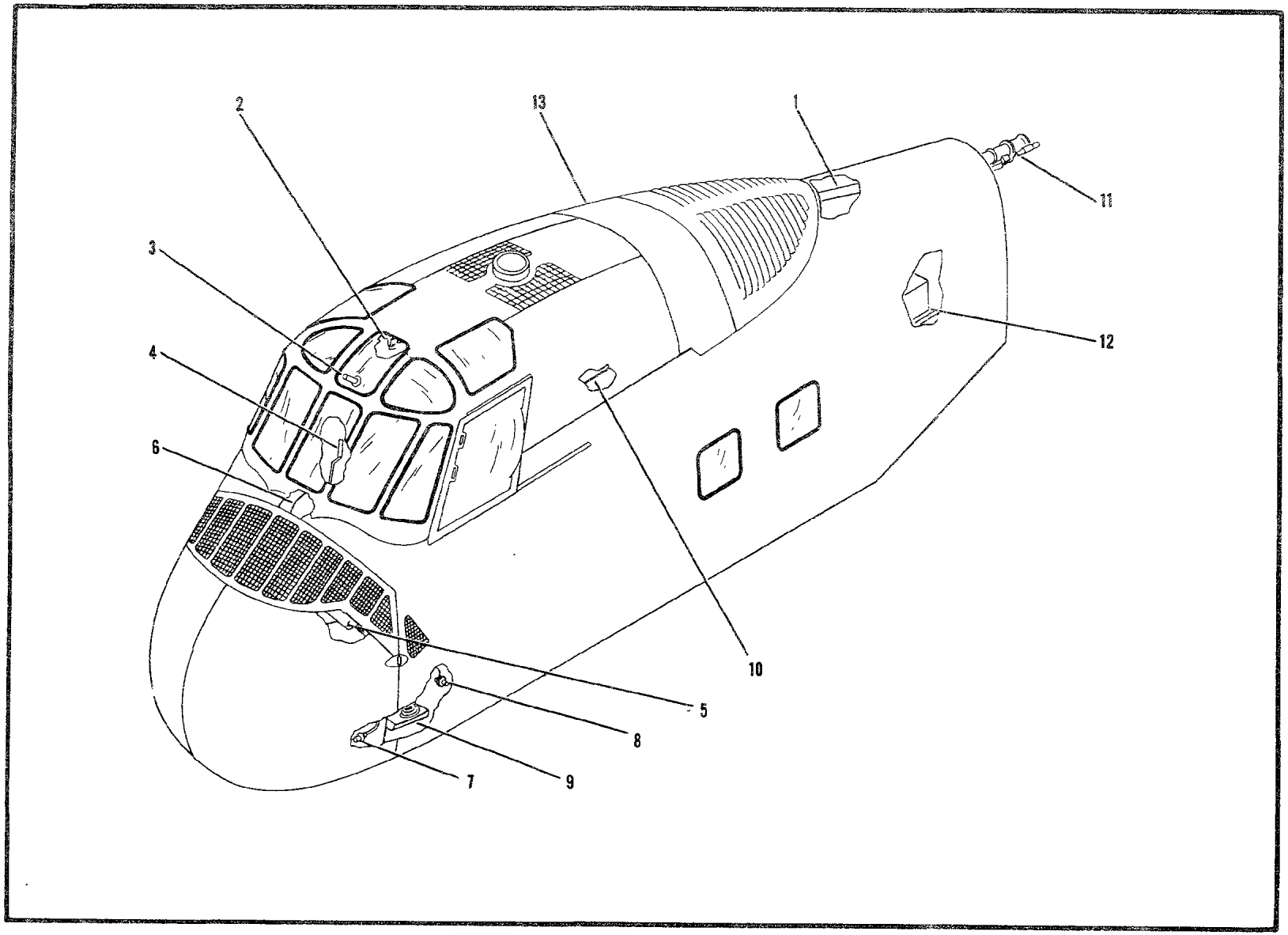

Figure 40. Forward Section Fuselage and Equipment

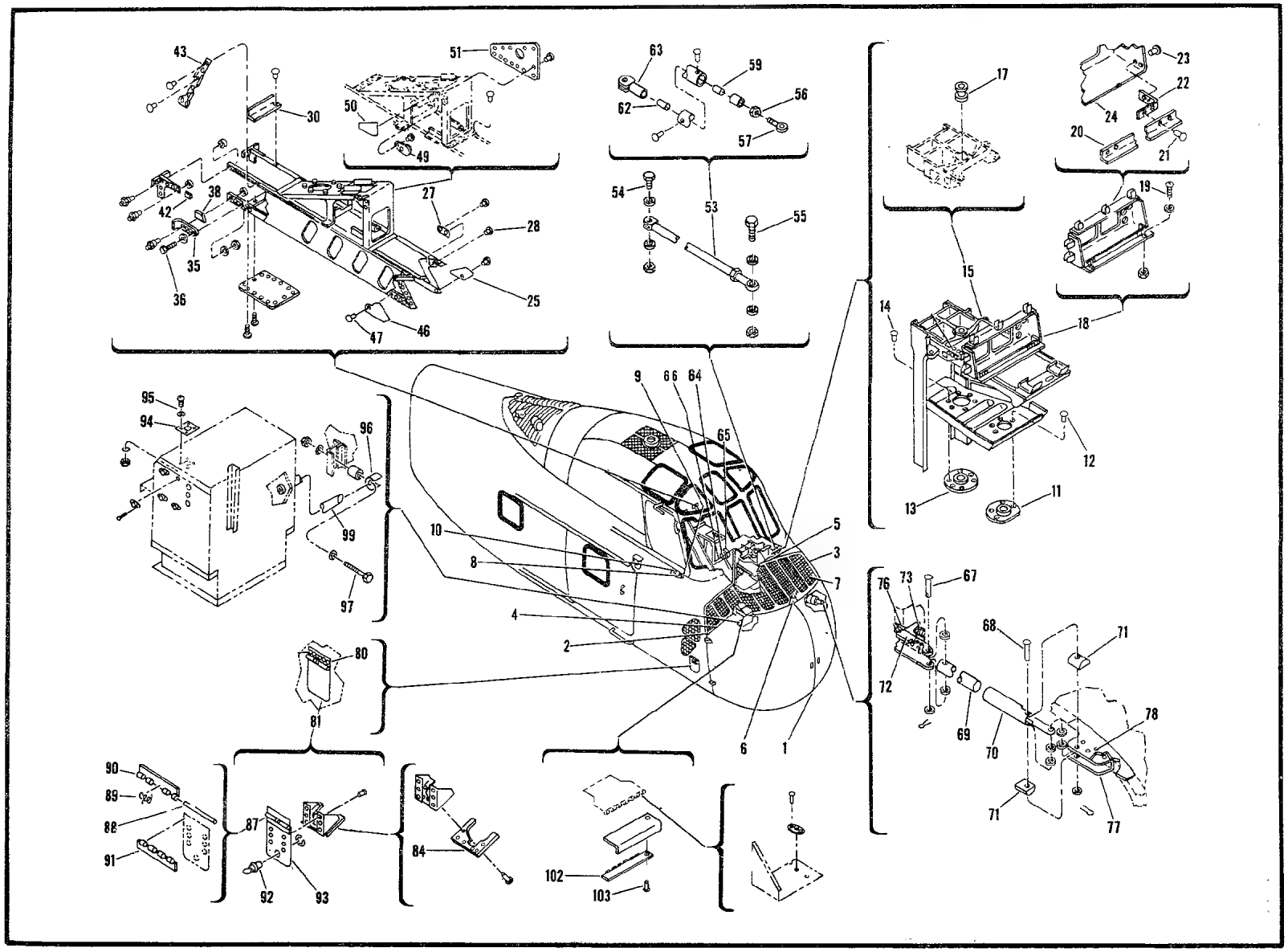

Figure 41. Forward Section Fuselage Assembly (Sheet 1 of 2)

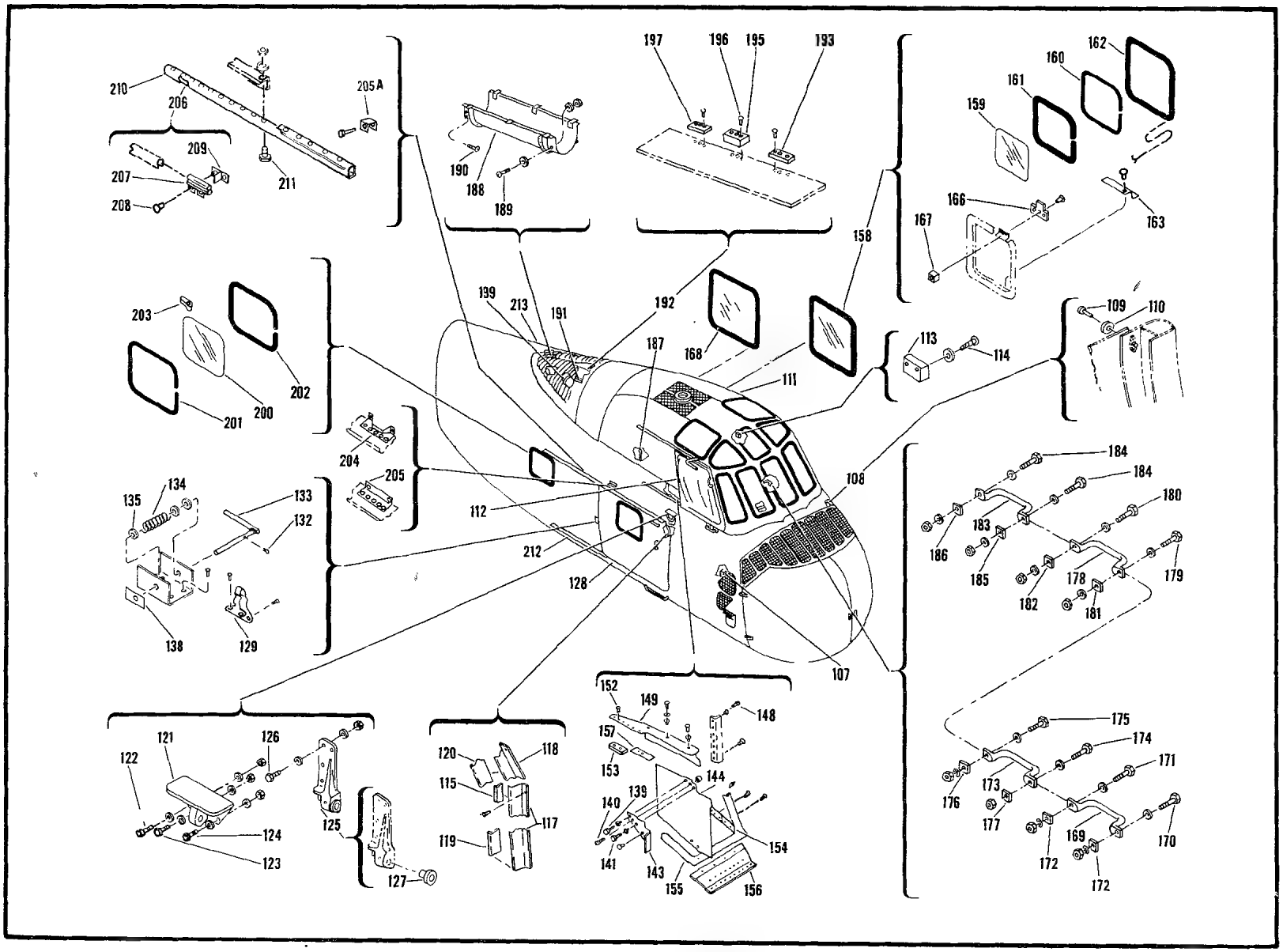

Figure 41. Forward Section Fuselage Assembly (Sheet 2 of 2)

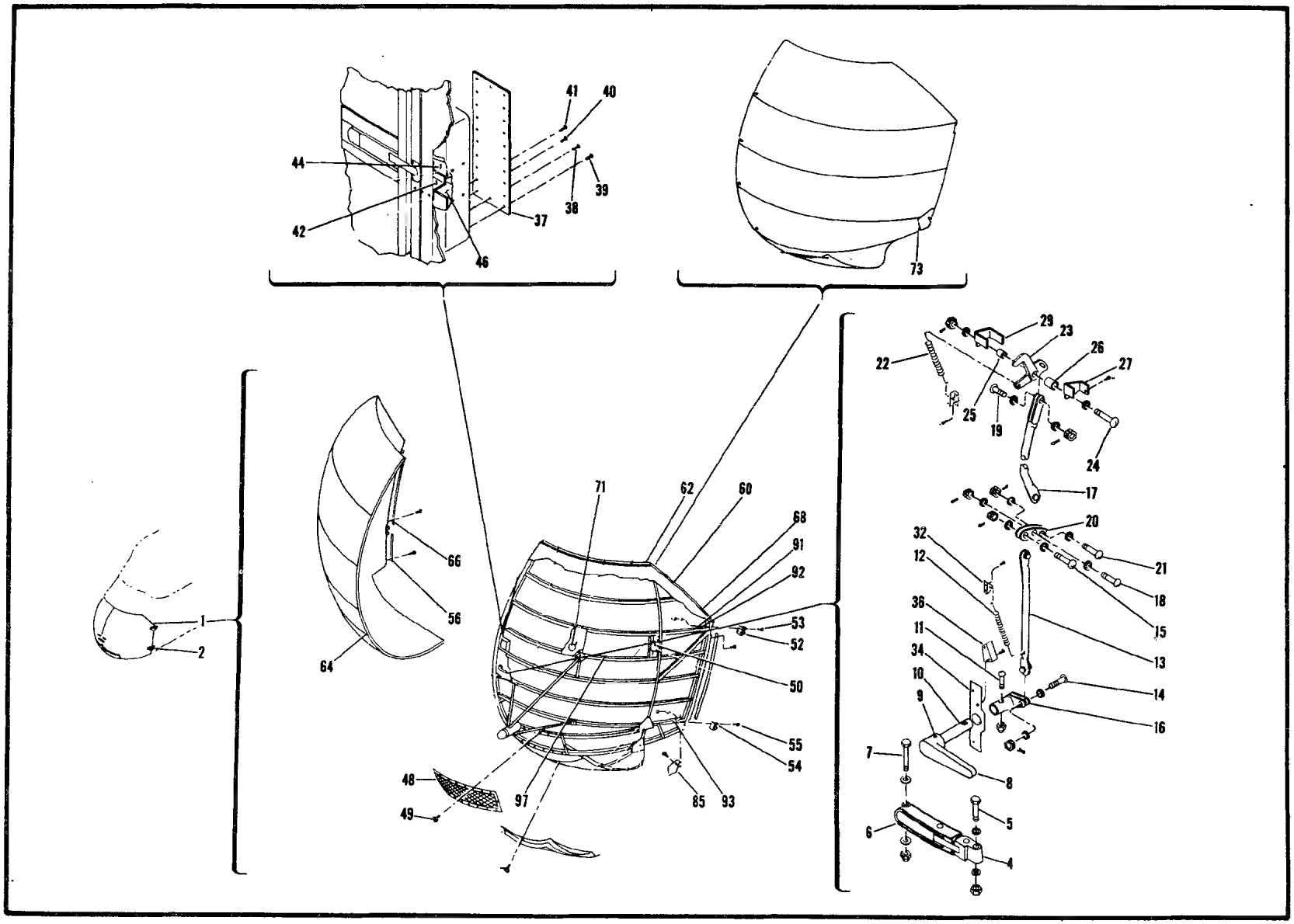

Figure 42. Nose Door Installation

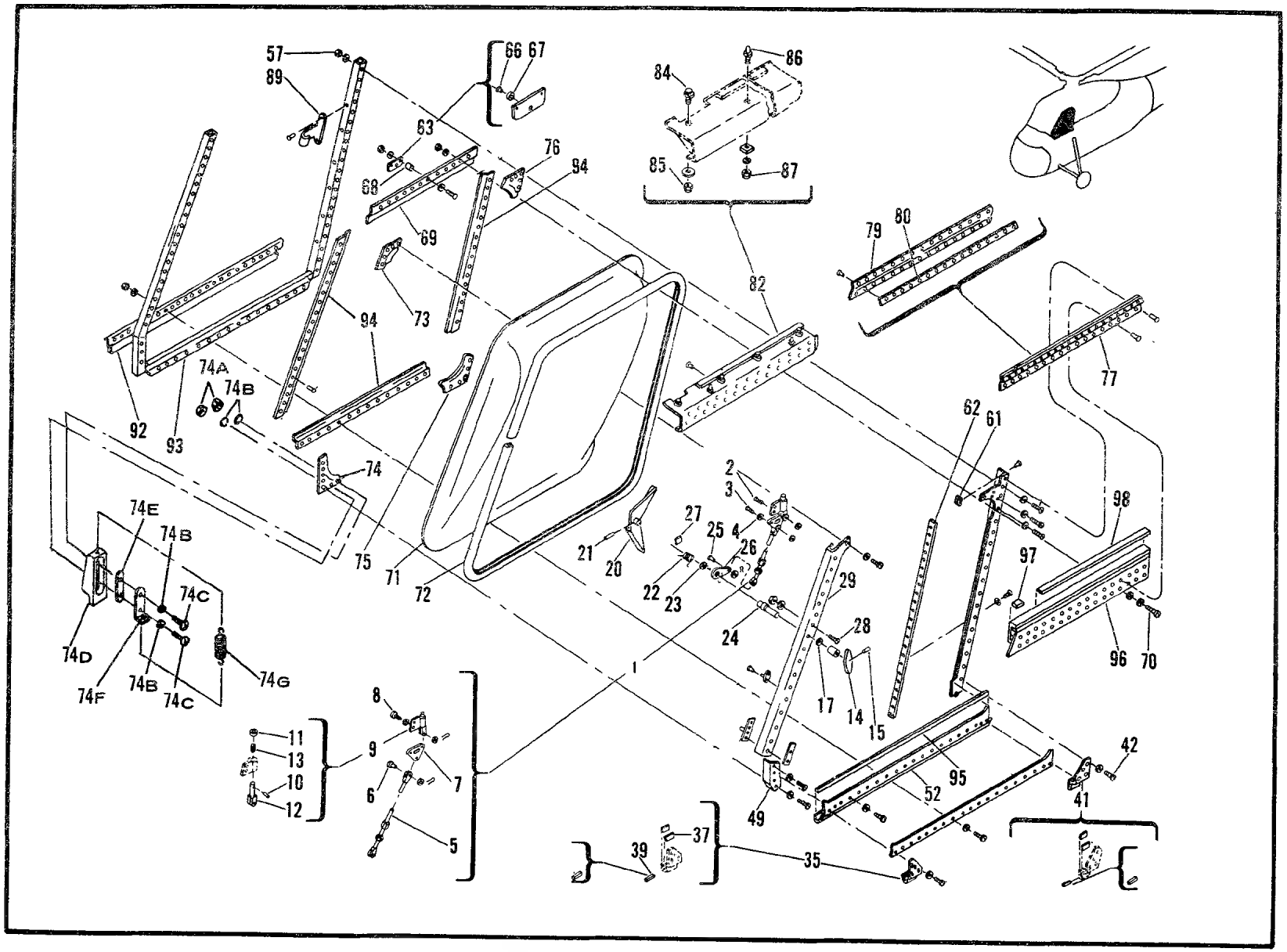

Figure 43. Window Assembly, Cockpit

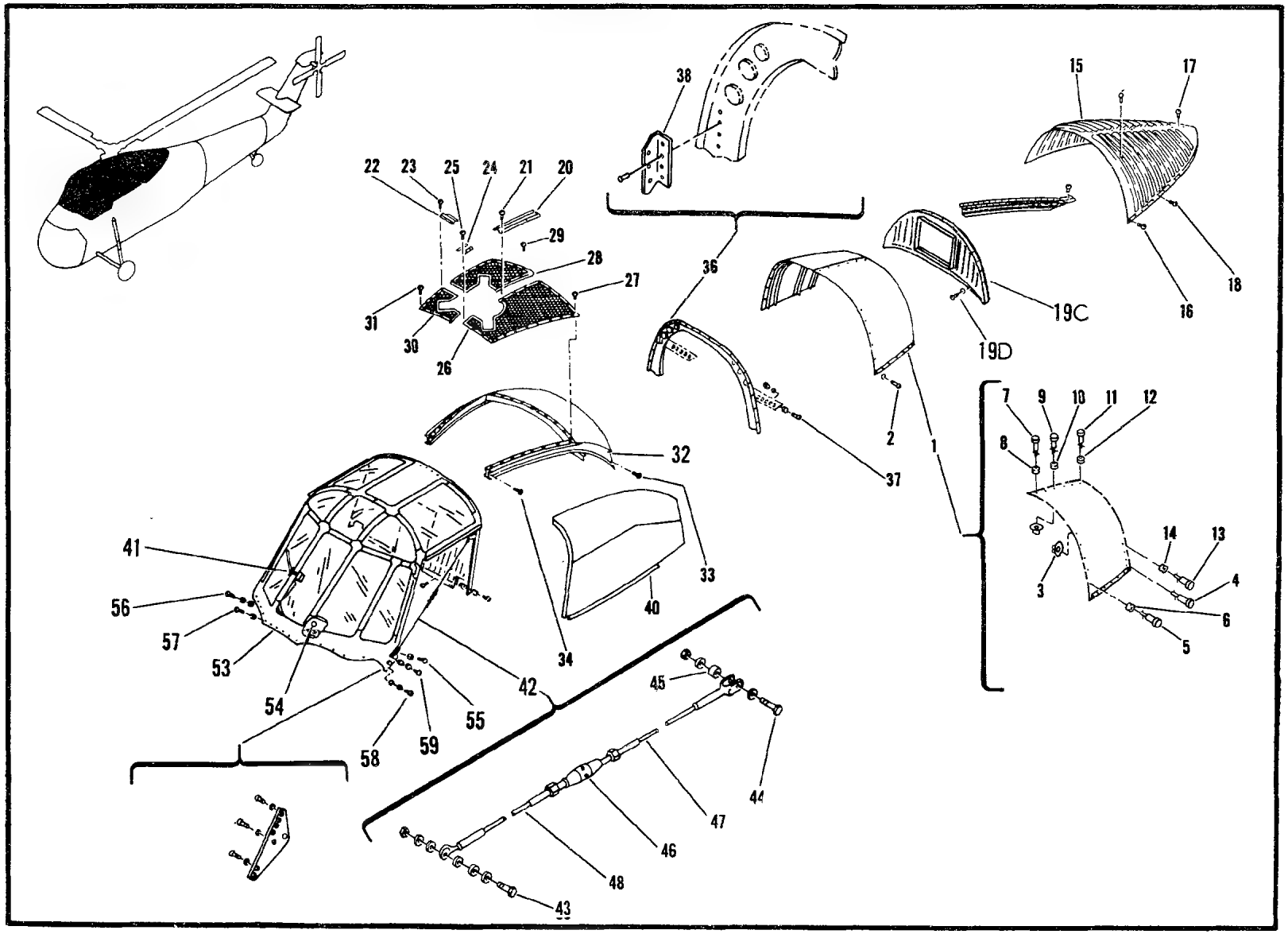

Figure 44. Cockpit Canopy Installation

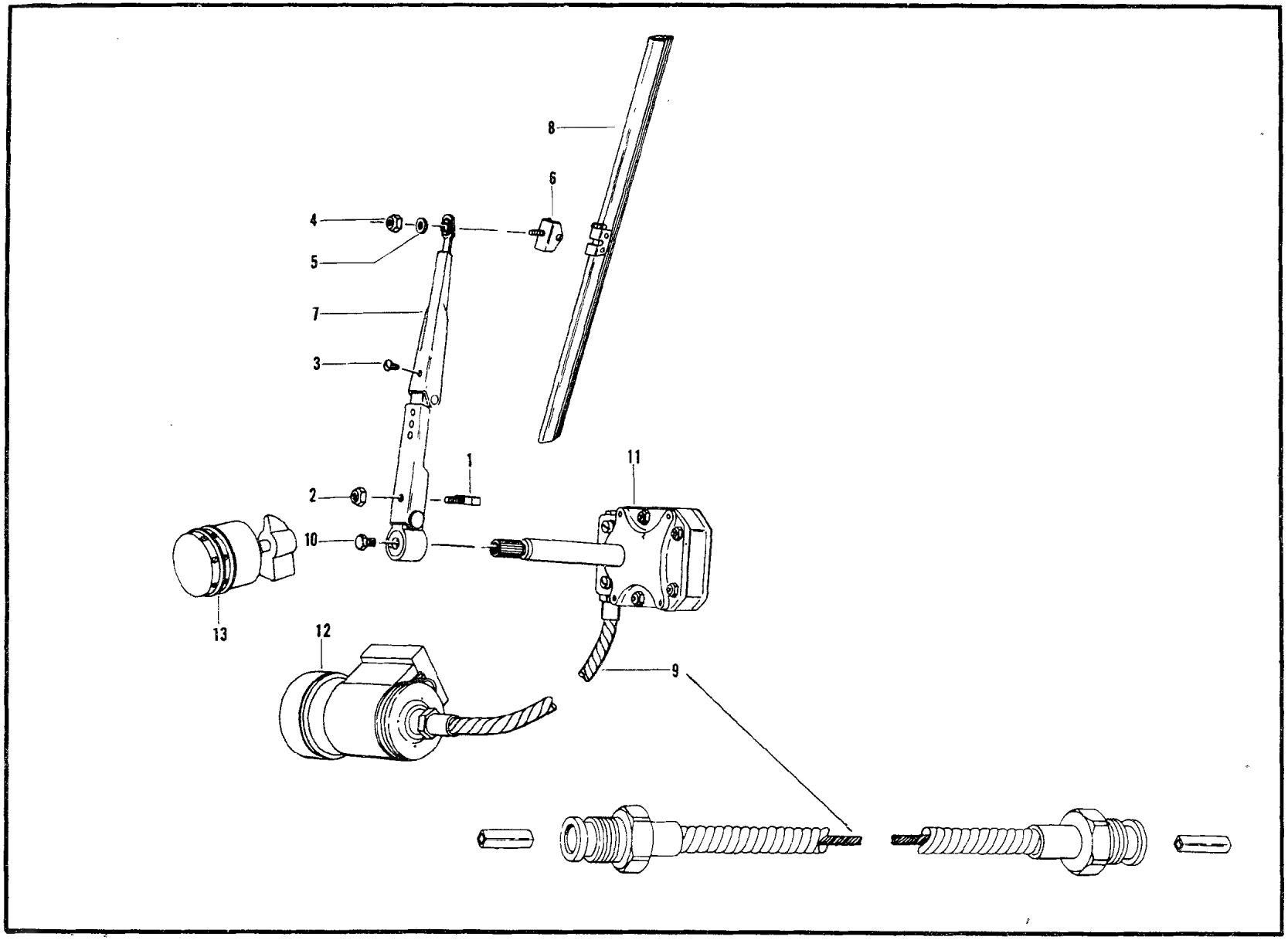

Figure 44A. Wiper System, Windshield, Electric

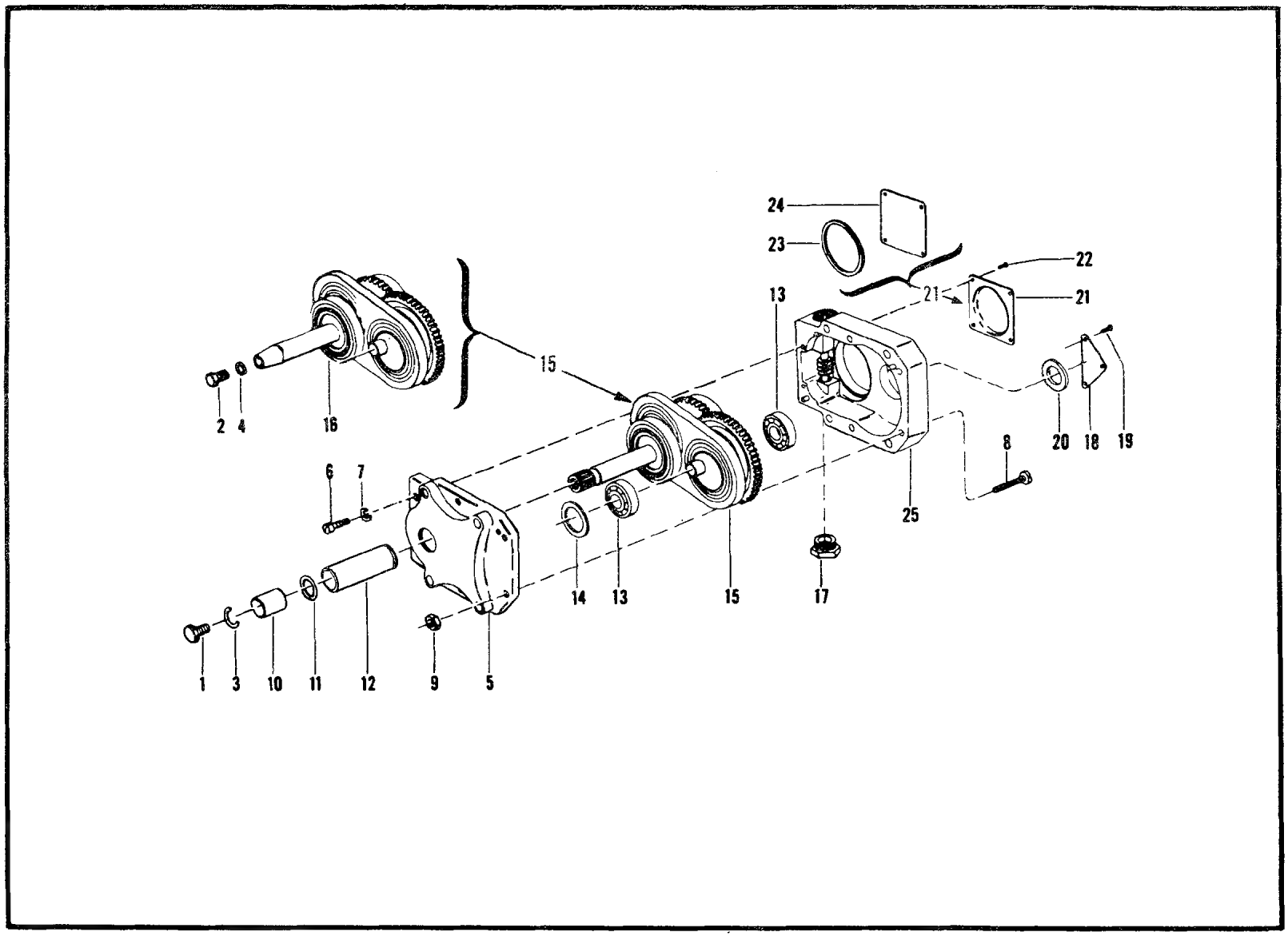

Figure 44B. Actuator Assembly, Windshield

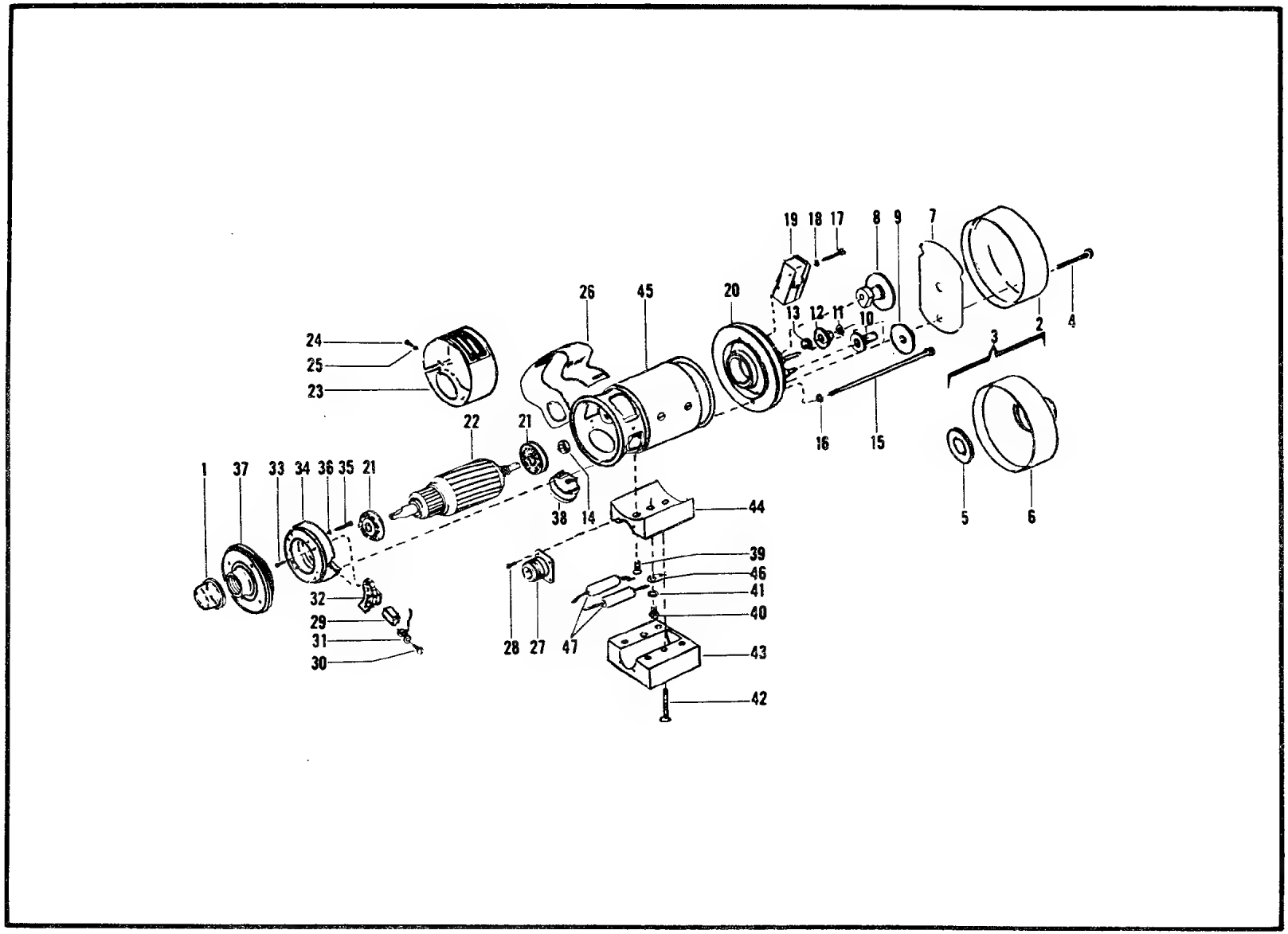

Figure 44C. Motor, Direct Current

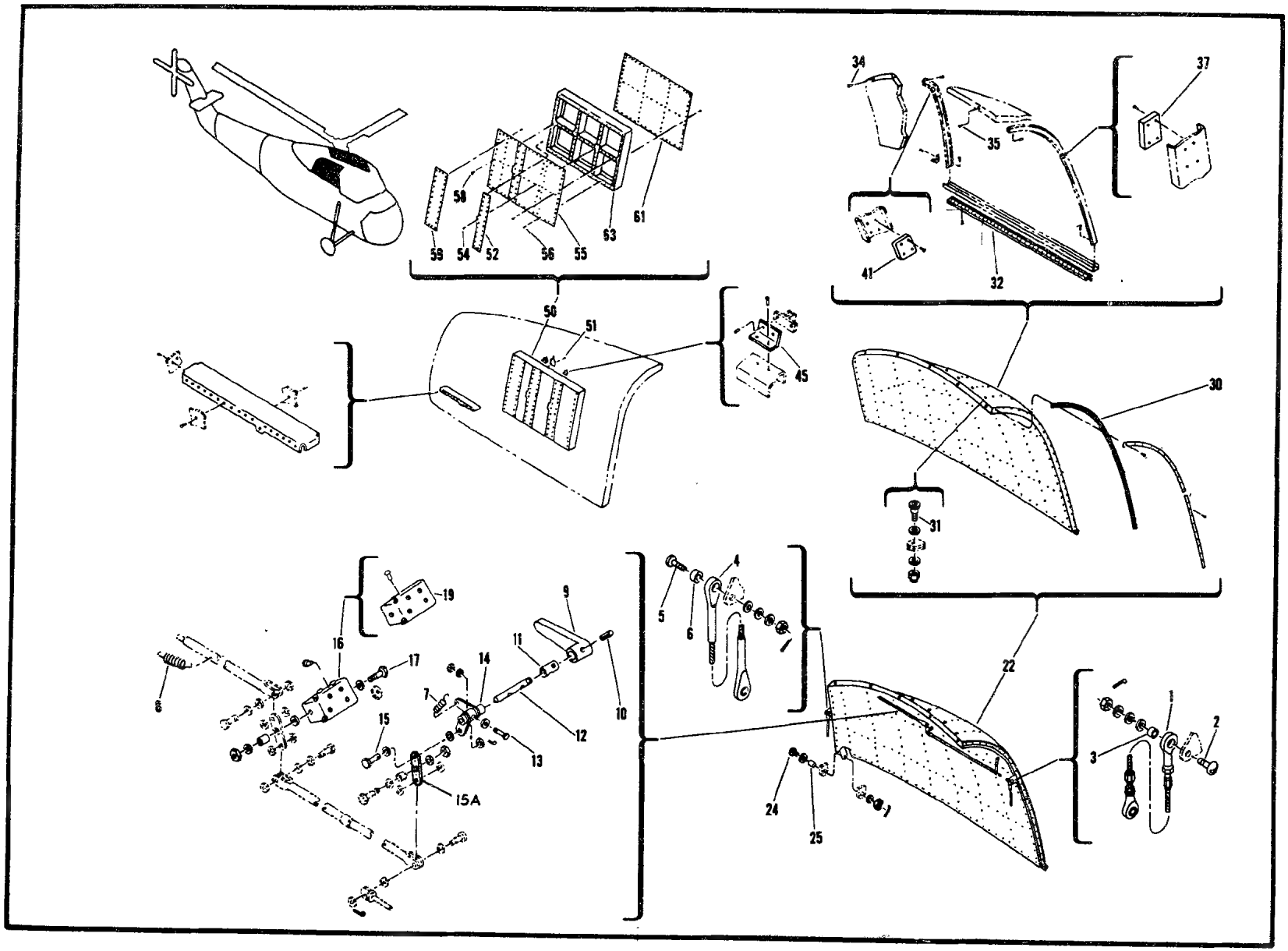

Figure 45. Platform Assembly, Canopy Fairing Service

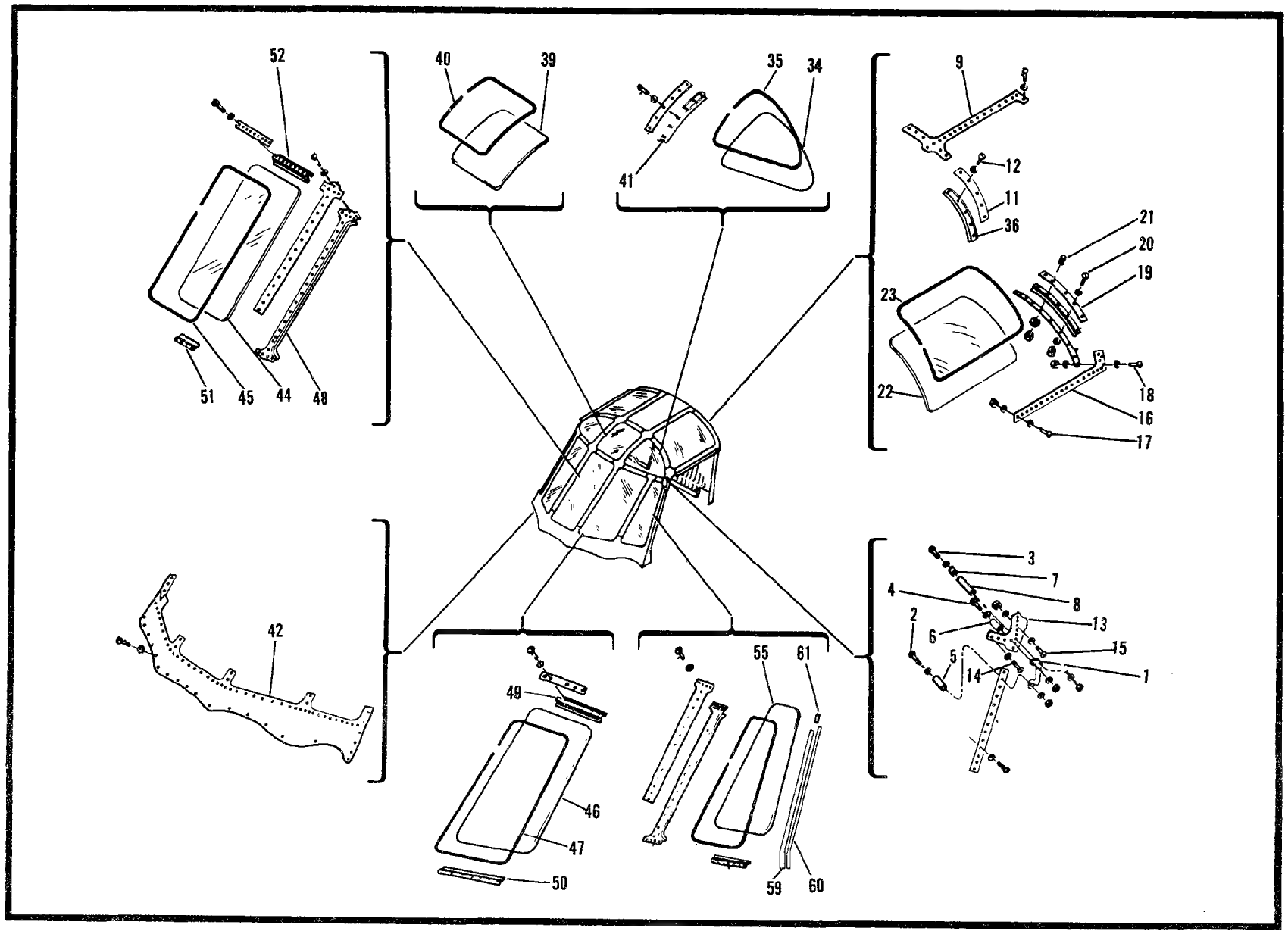

Figure 46. Cockpit Canopy Assembly (Sheet 1 of 2)

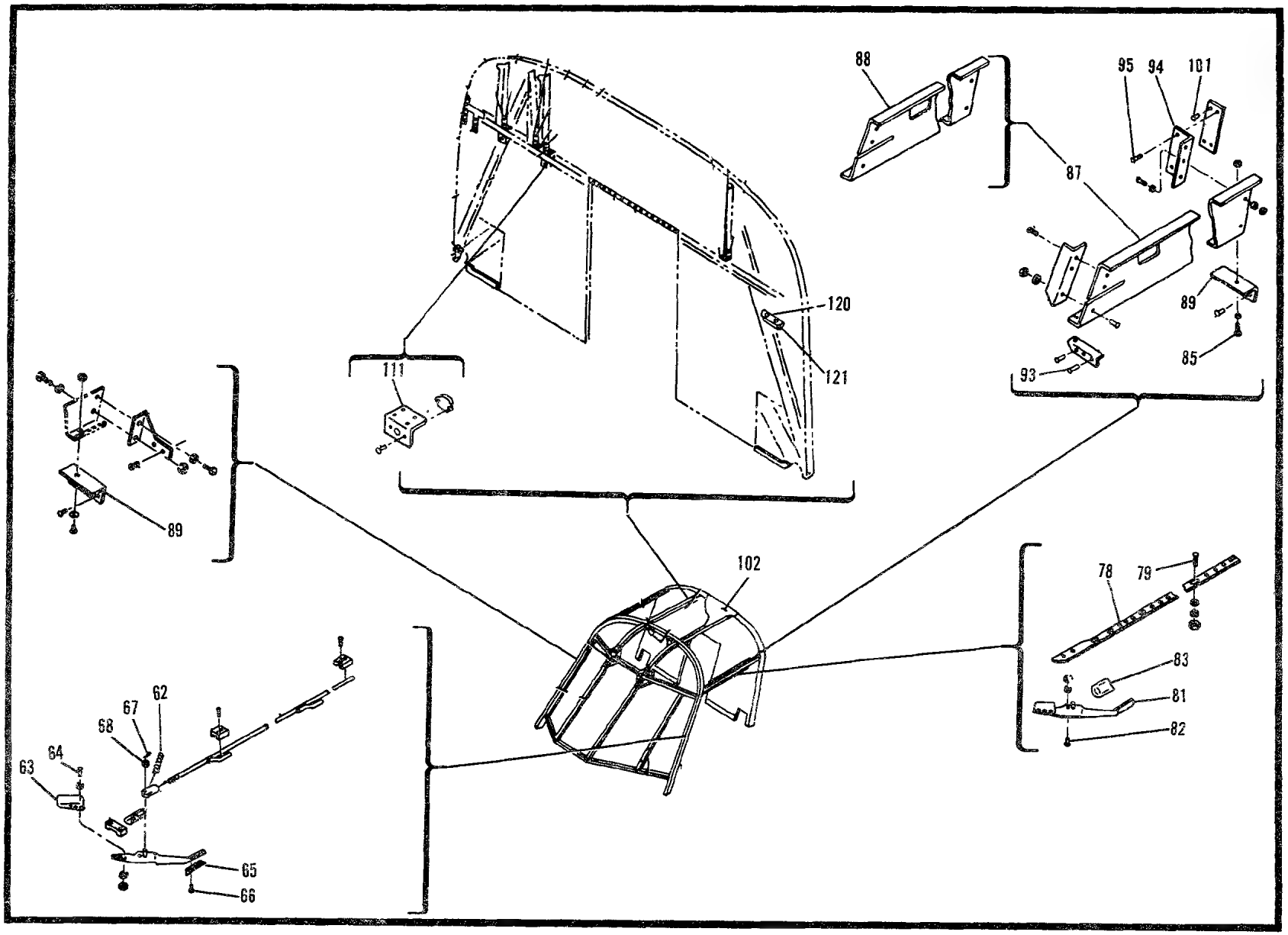

Figure 46. Cockpit Canopy Assembly (Sheet 2 of 2)

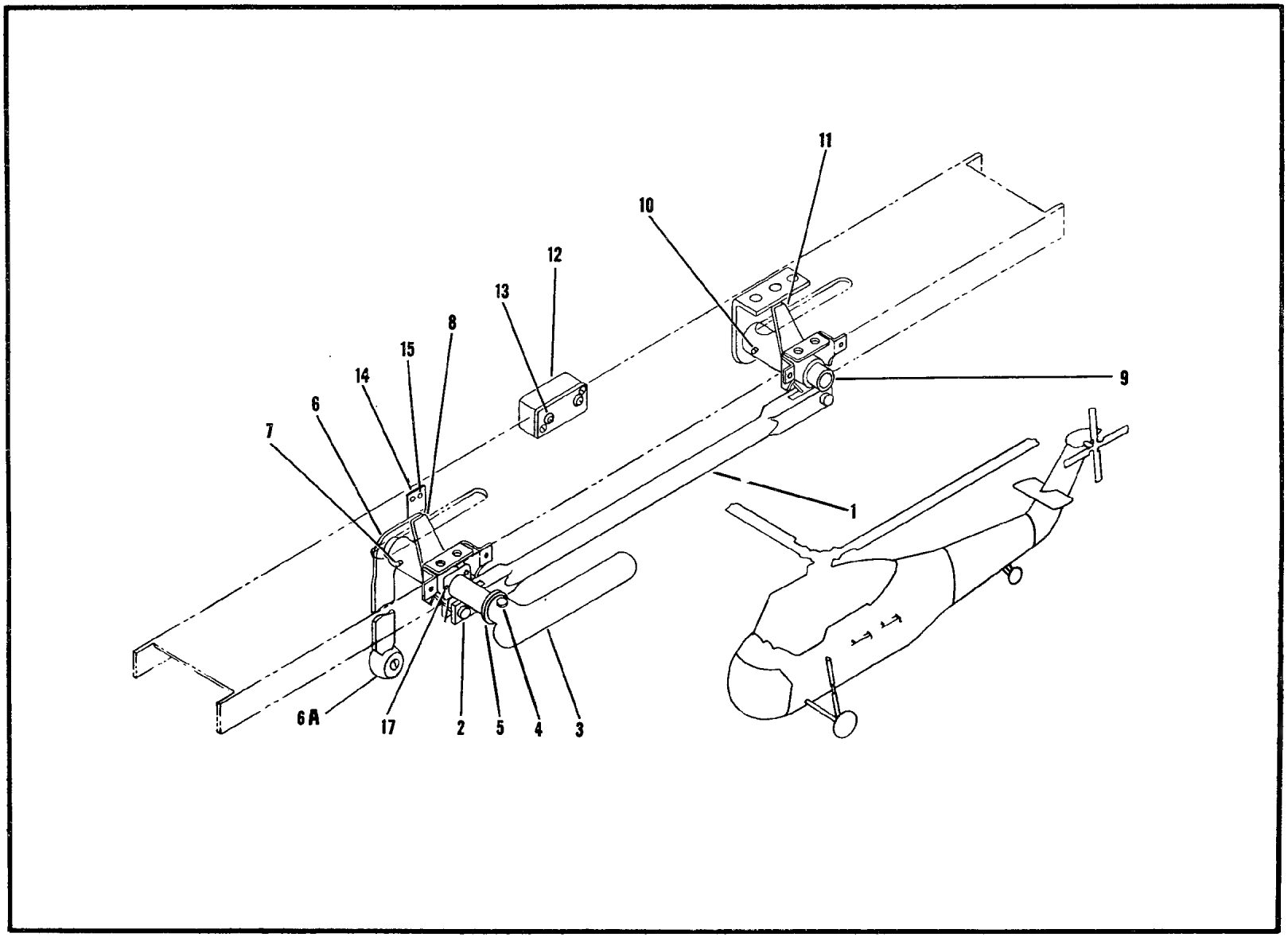

Figure 47. Emergency Hatch Mechanism Installation

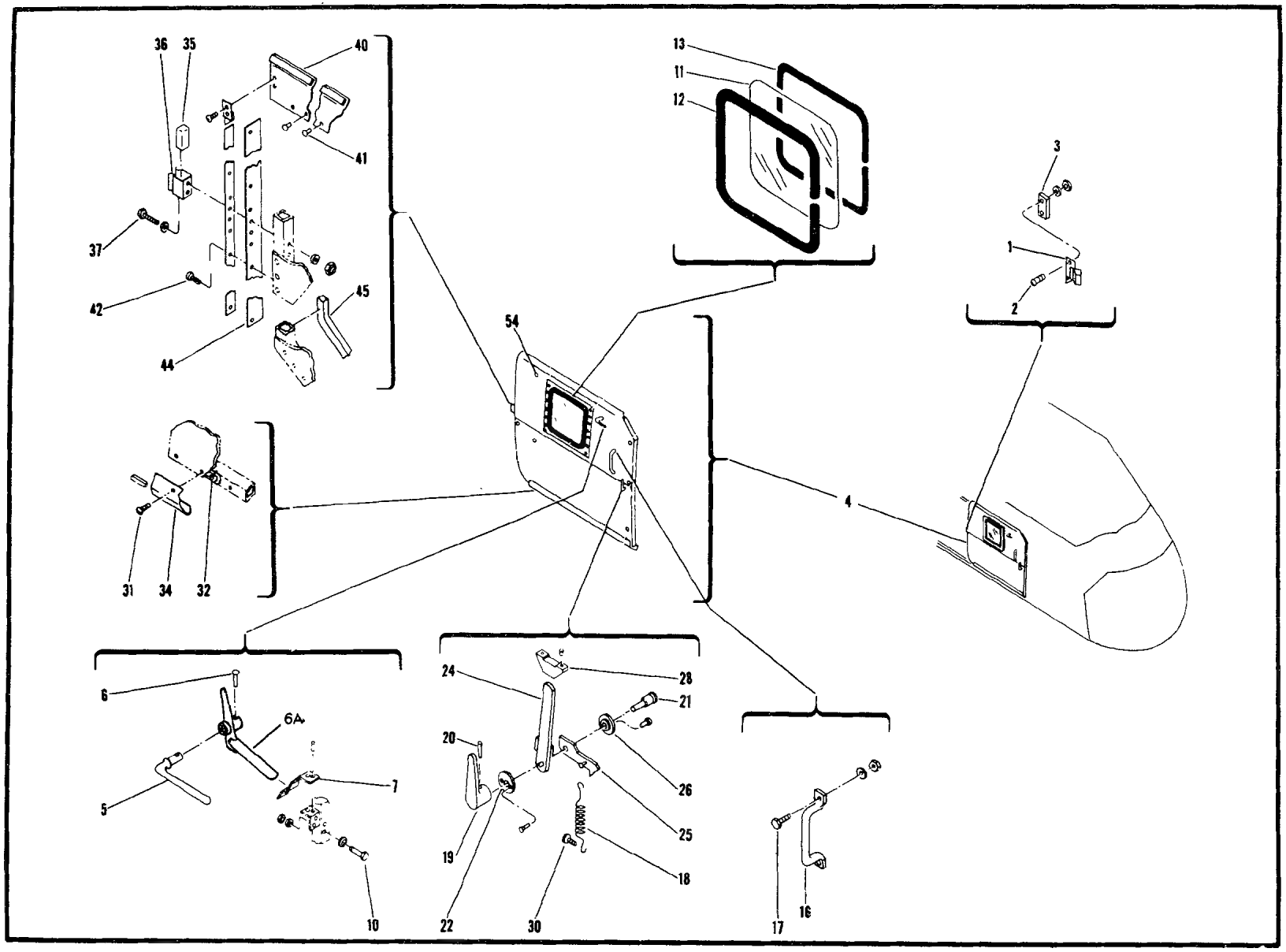

Figure 48. Cabin Door Installation

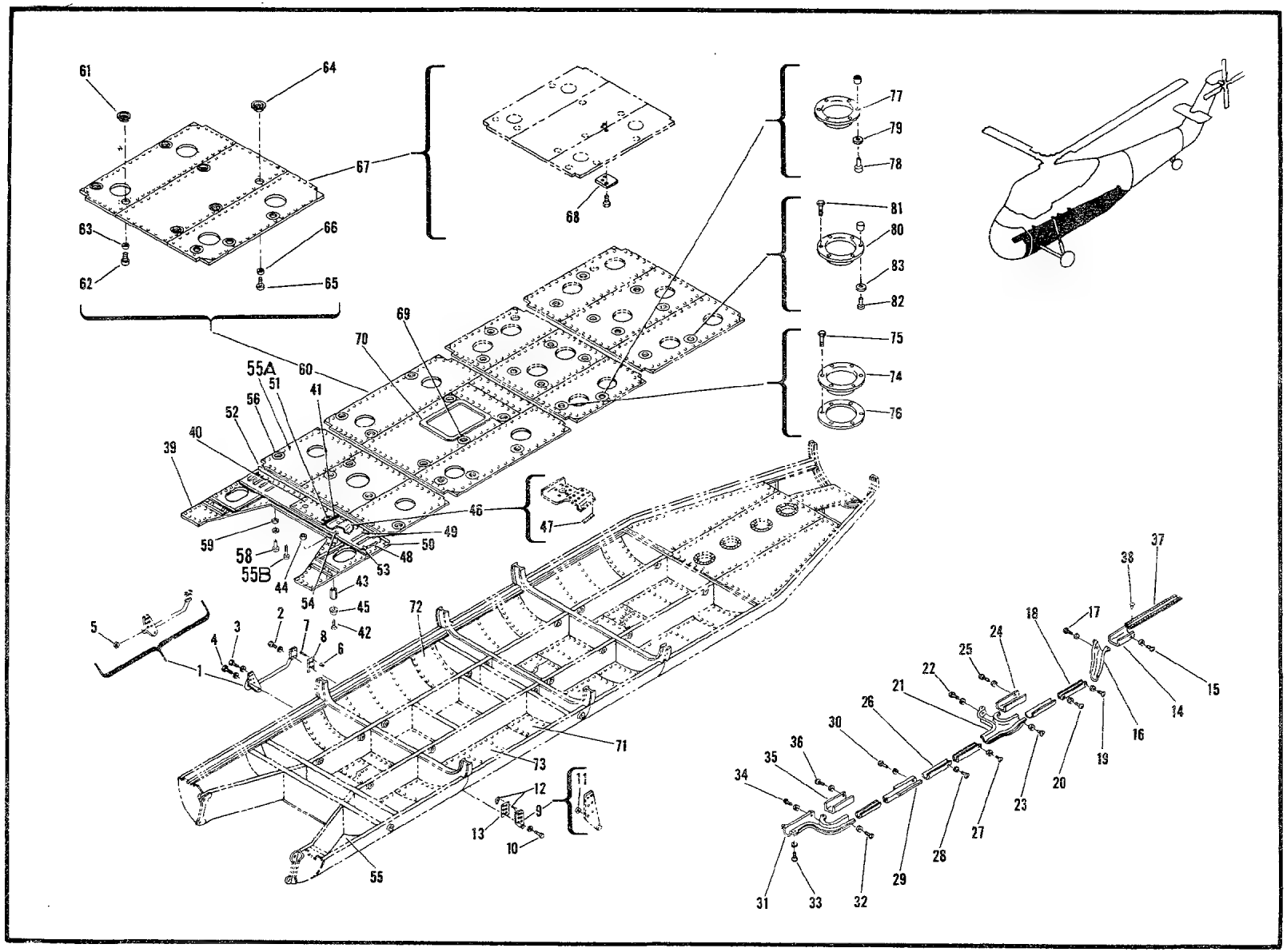

Figure 49. Bottom Structure Installation (Usbl Eff 53-4475 Thru 55-4504) (Sheet 1 of 2)

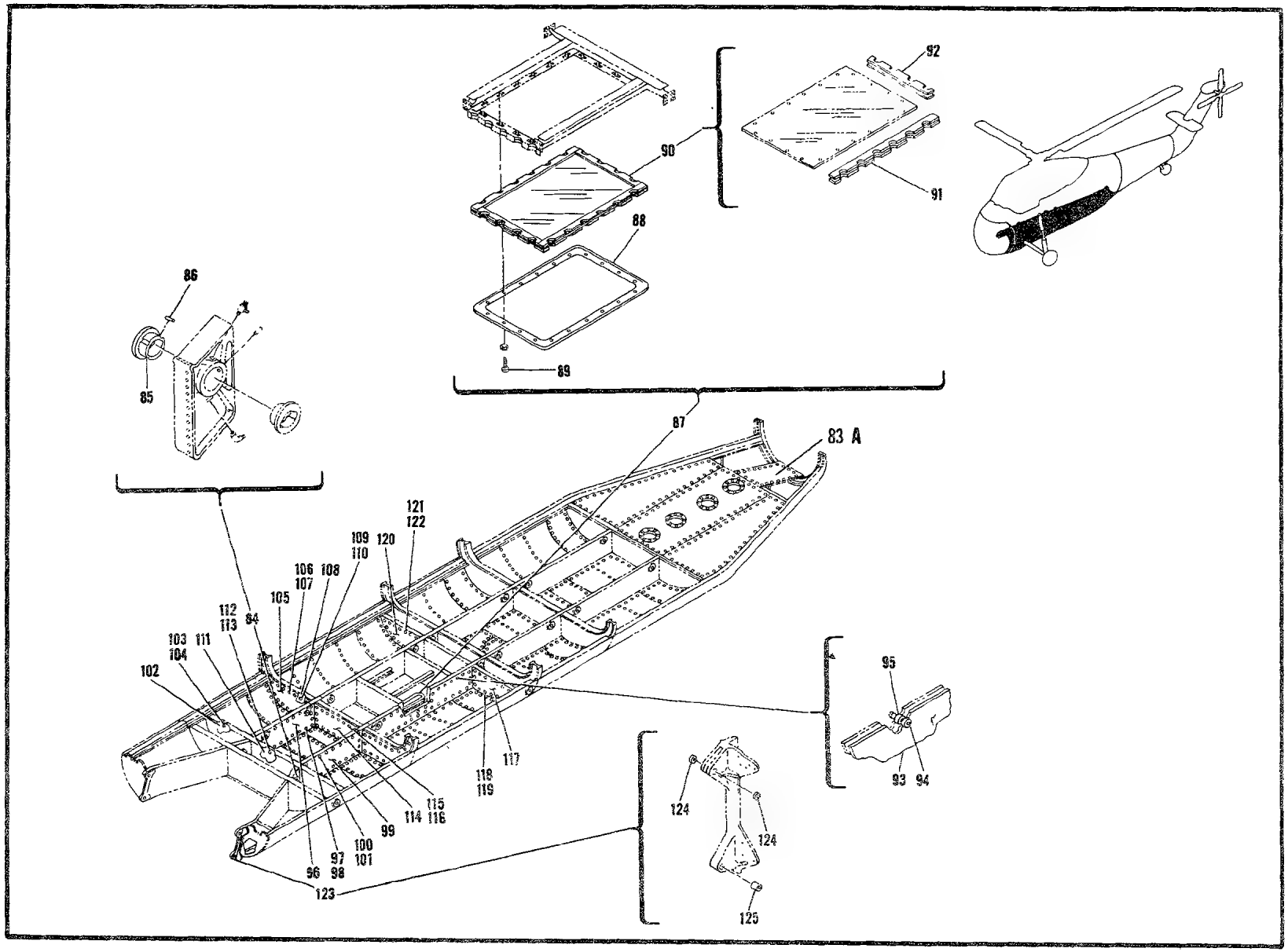

Figure 49. Bottom Structure Installation (Usbl Eff 53-4475 Thru 55-4504) (Sheet 2 of 2)

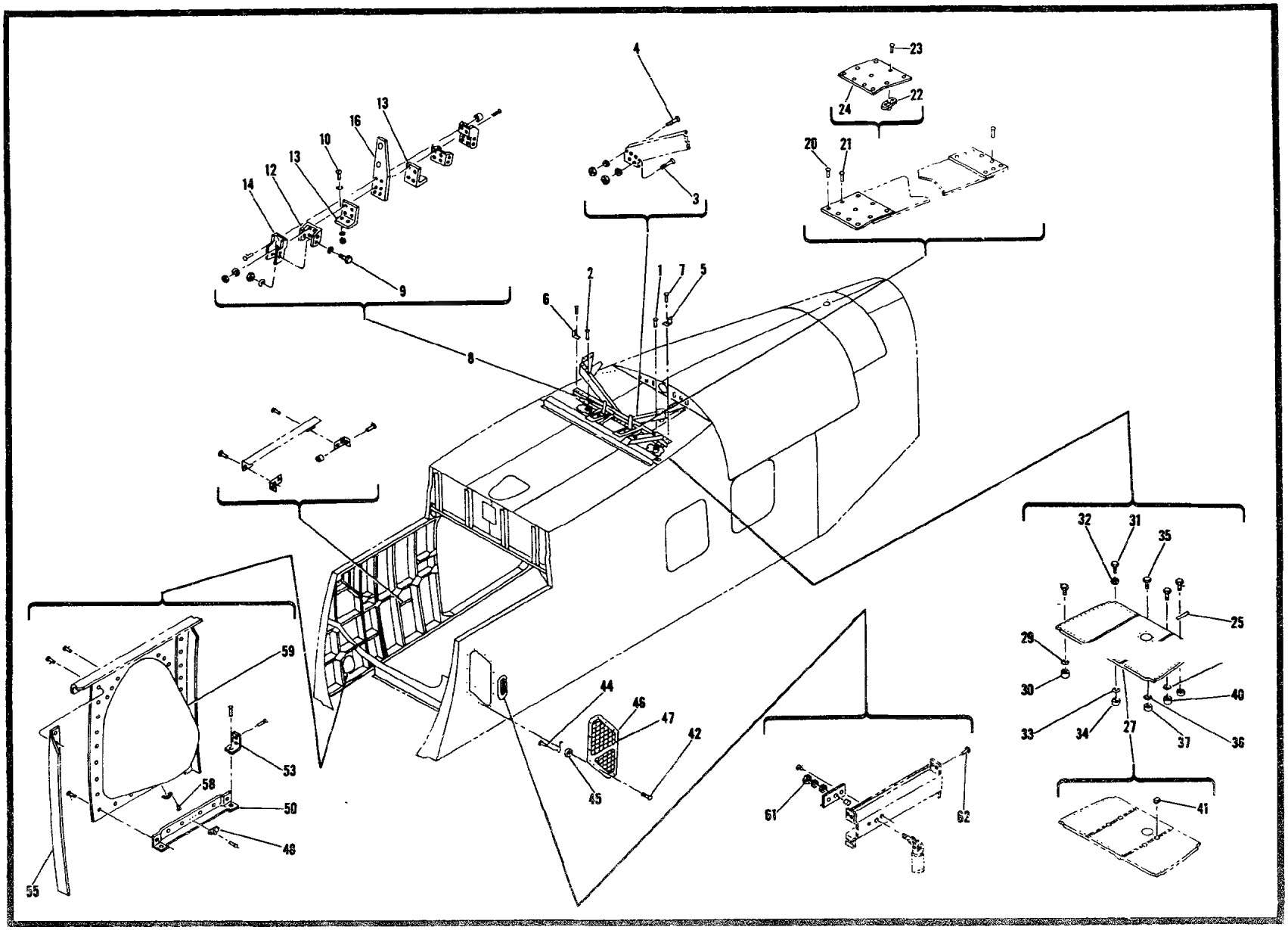

Figure 50. Cabin Assembly (Sheet 1 of 6)

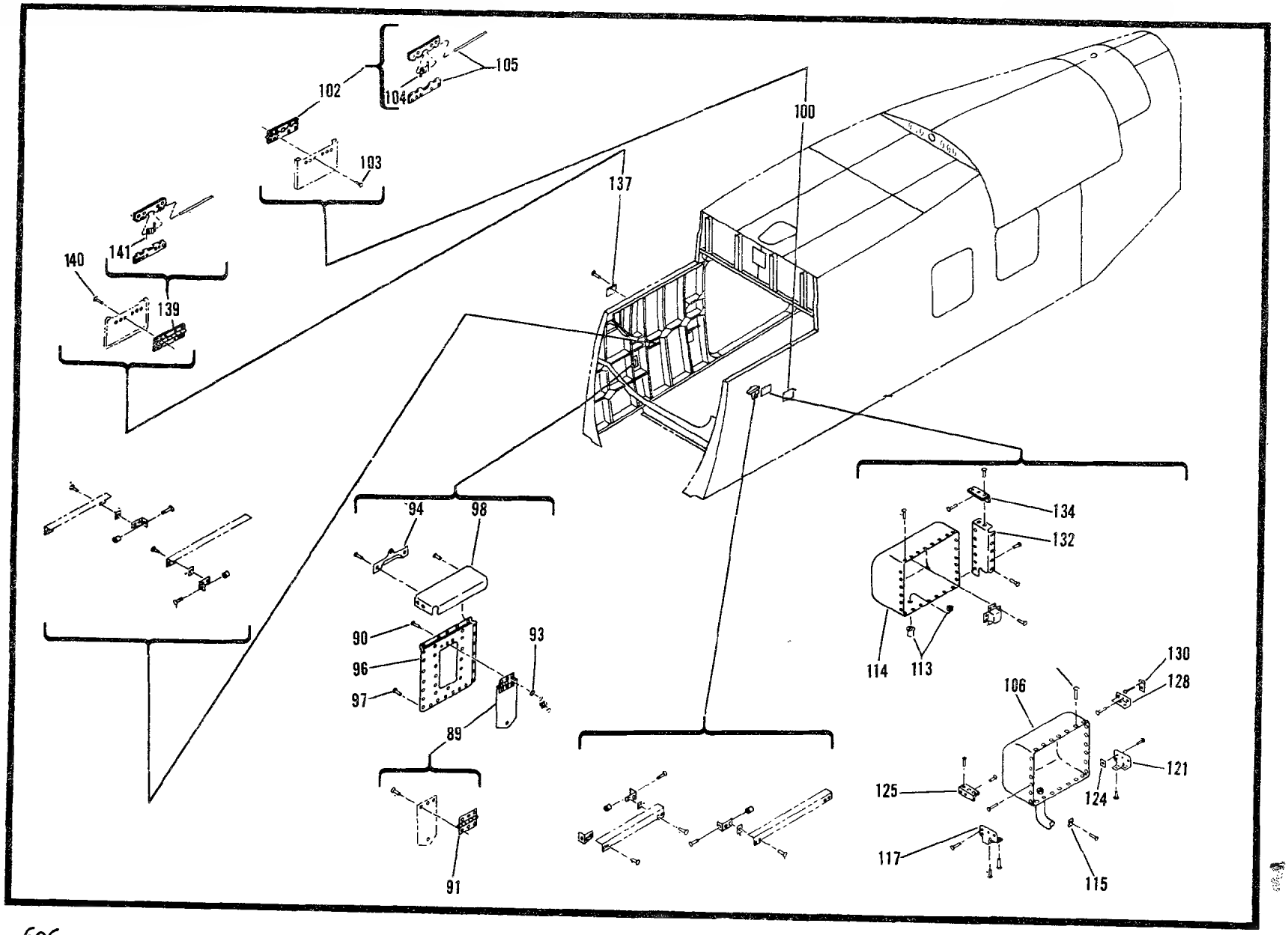

Figure 50. Cabin Assembly (Sheet 2 of 6)

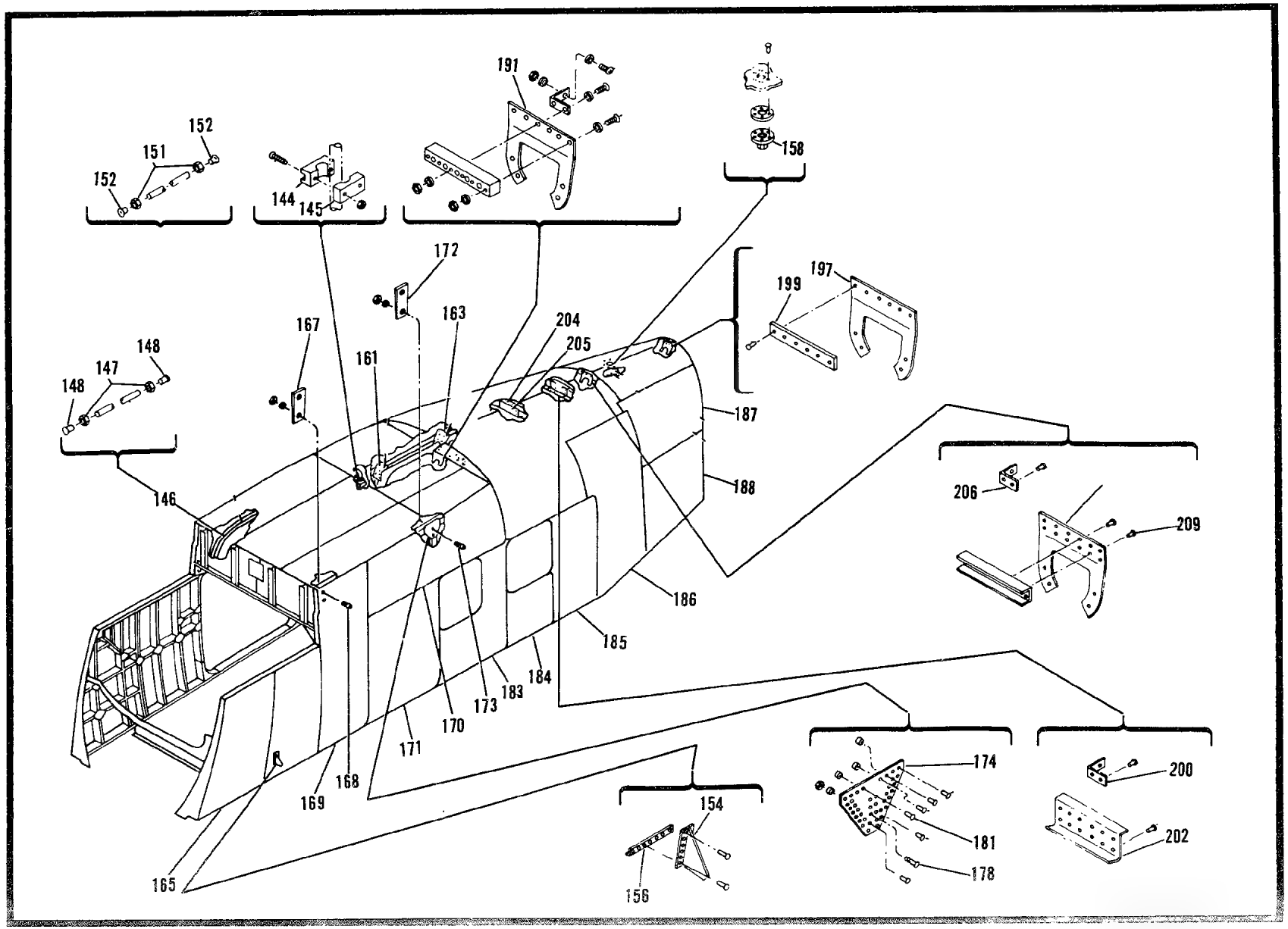

Figure 10. Cabin Assembly (Sheet 3 of 6)

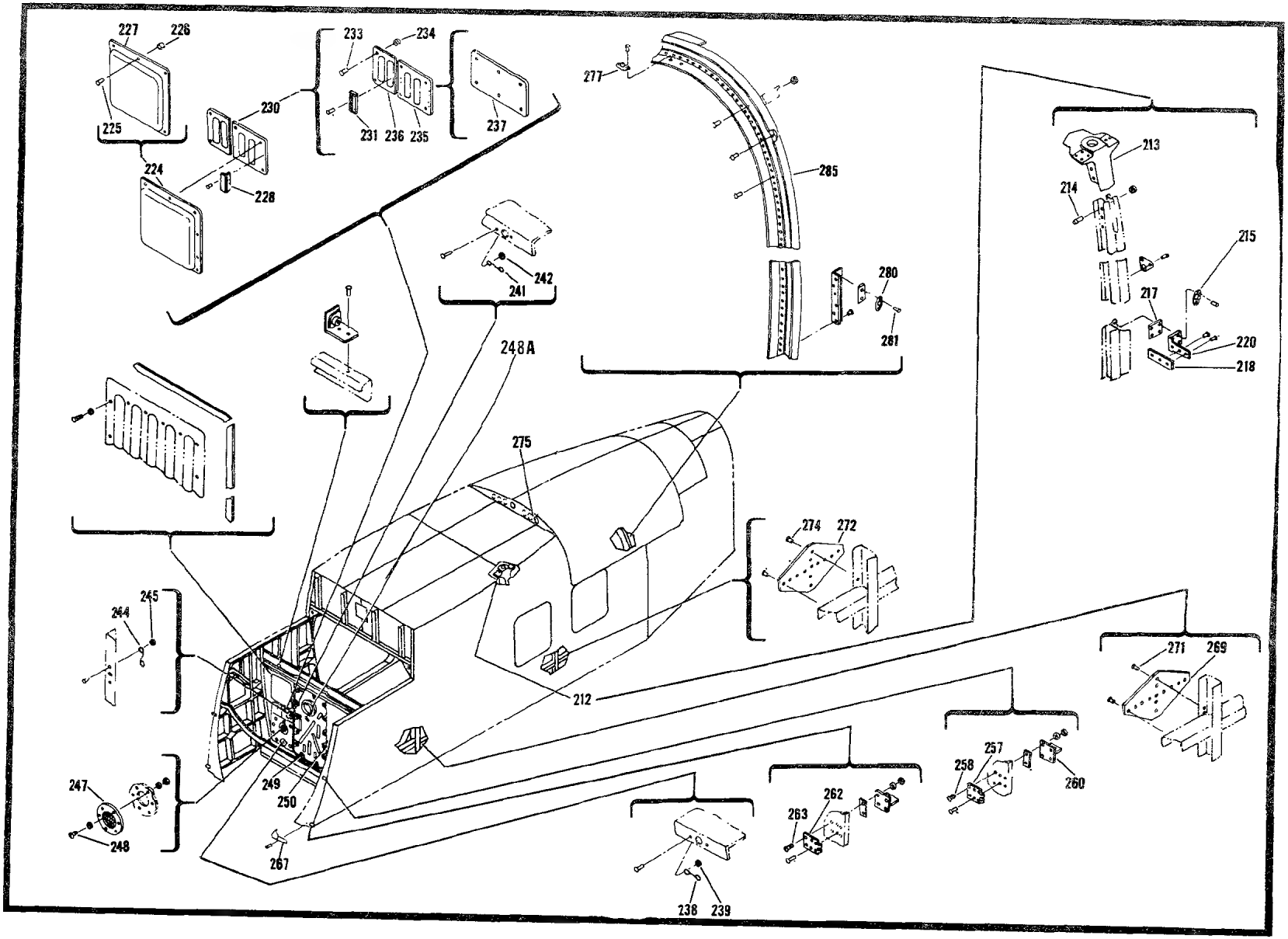

Figure 50. Cabin Assembly (Sheet 4 of 6)

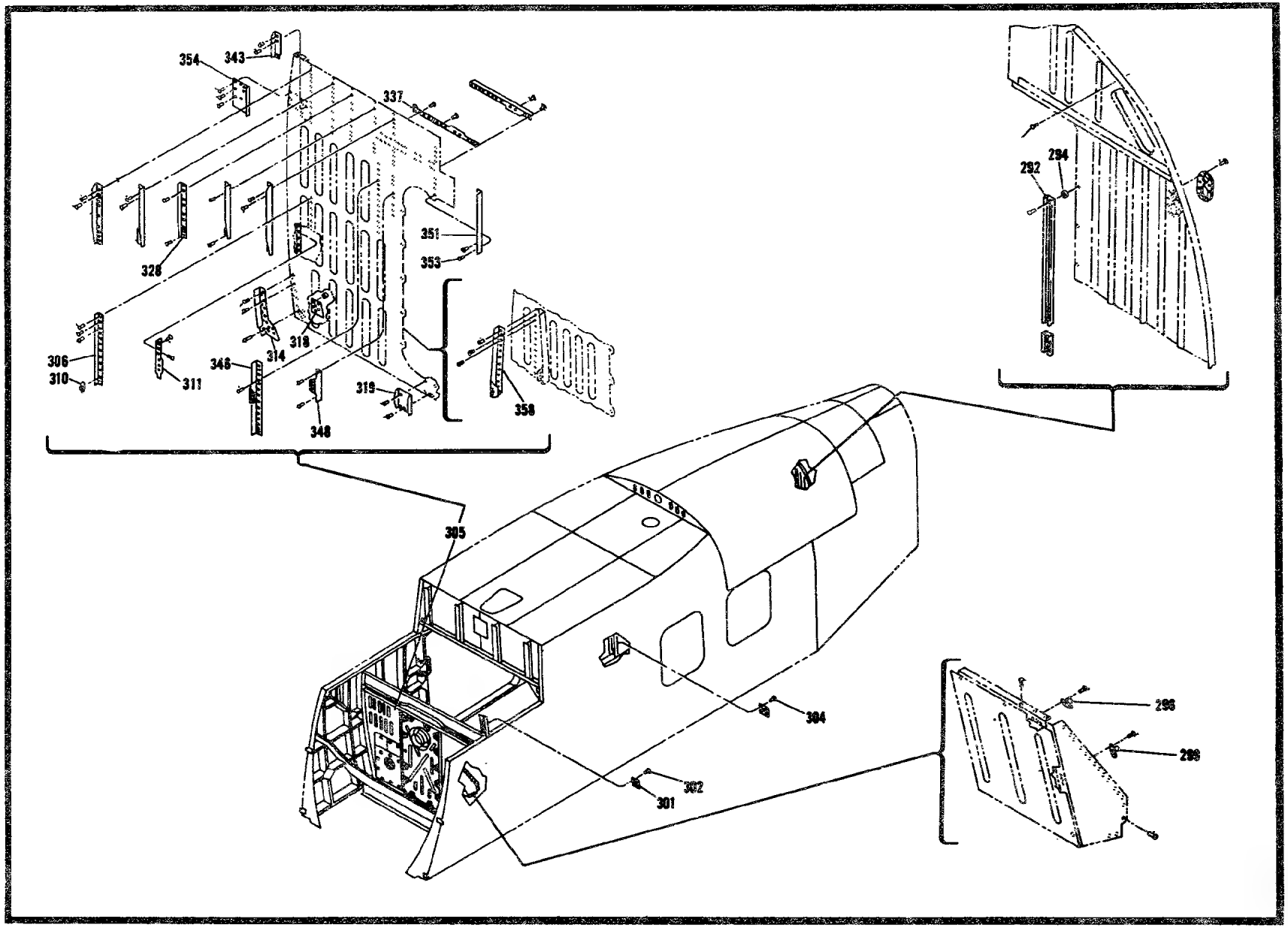

Figure 50. Cabin Assembly (Sheet 5 of 6)

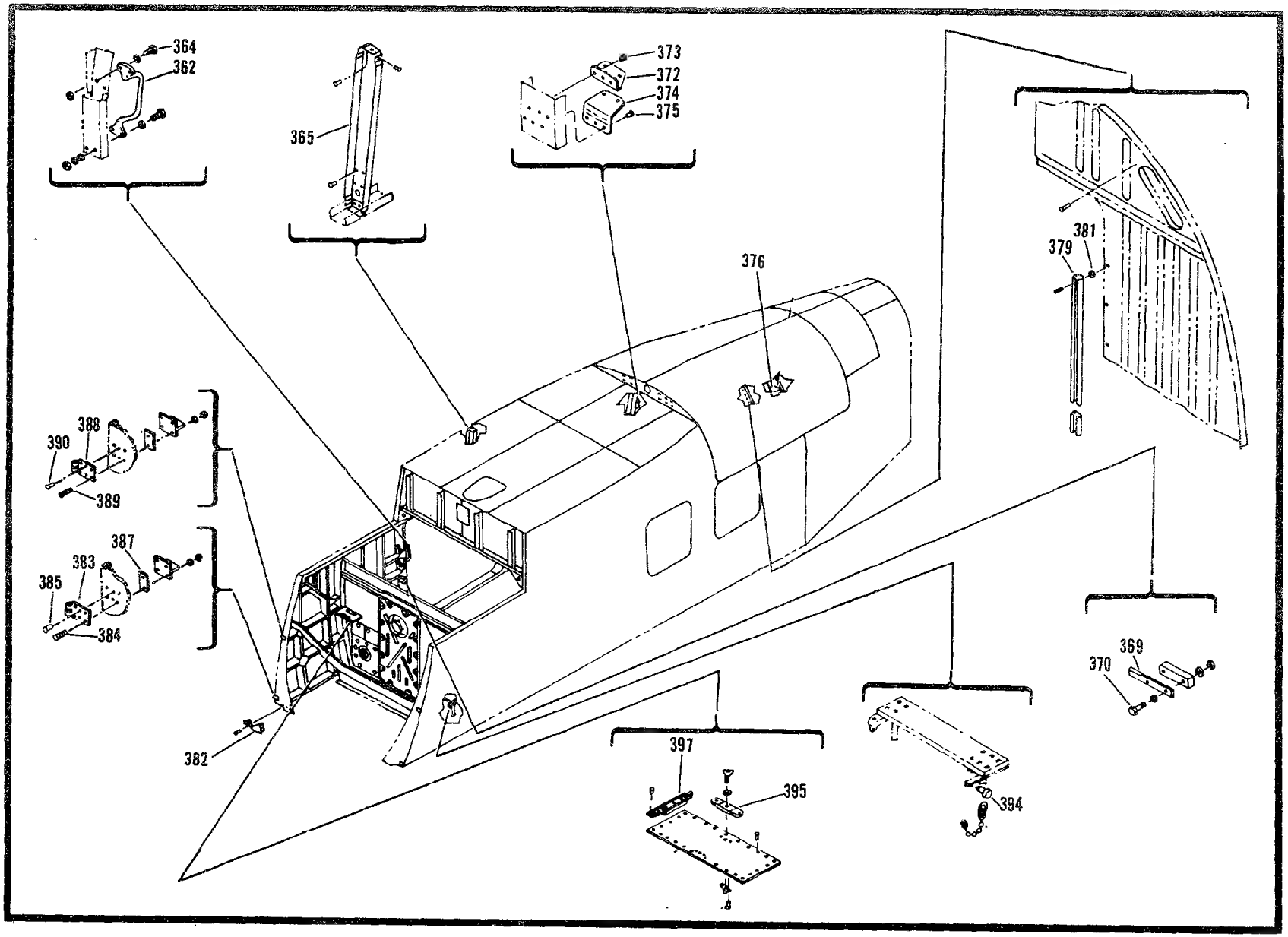

Figure 50. Cabin Assembly (Sheet 6 of 6)

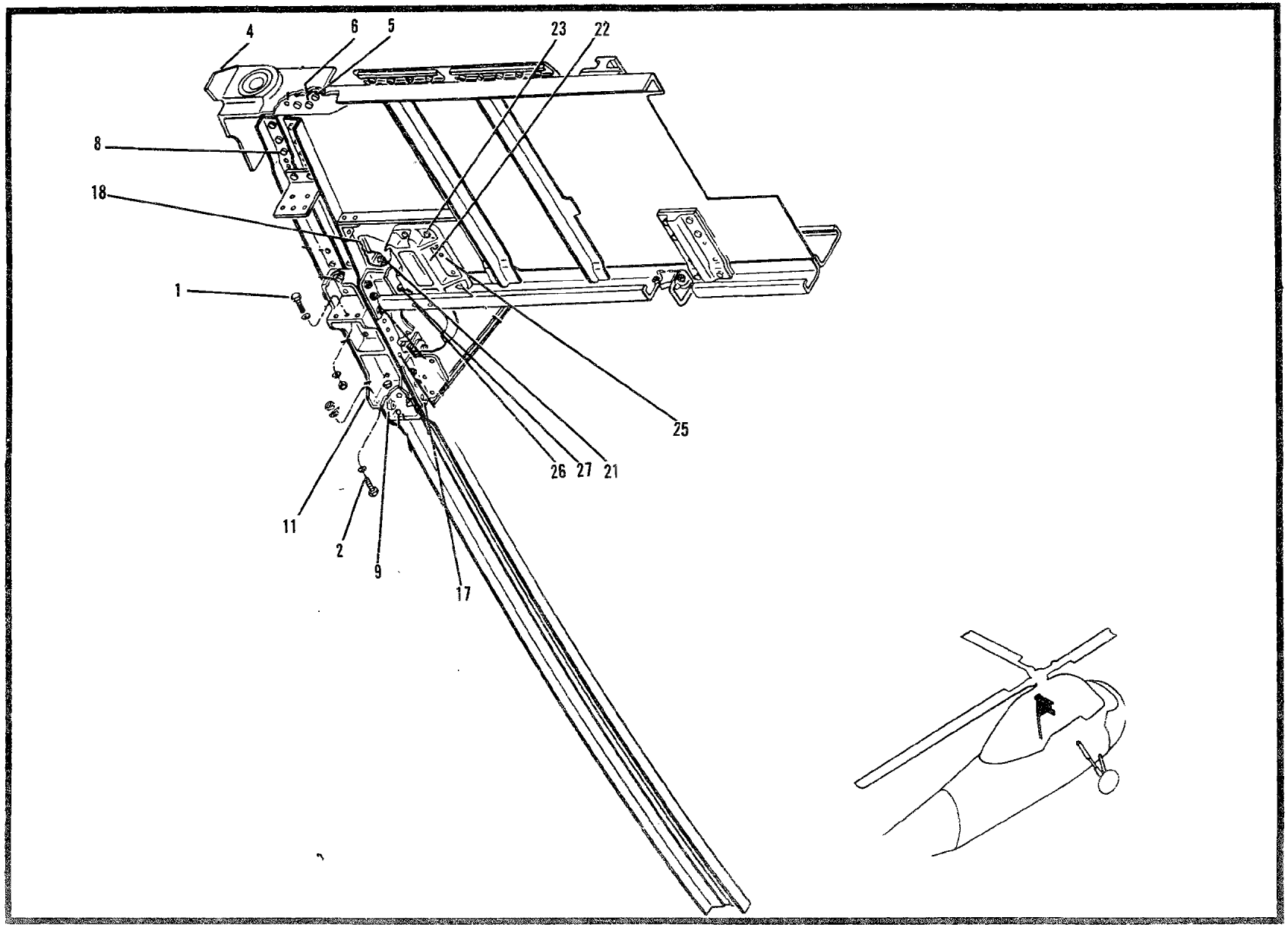

Figure 51. Left Hand Bulkhead Installation (USBL EFF 53-4475 thru 56-4312)

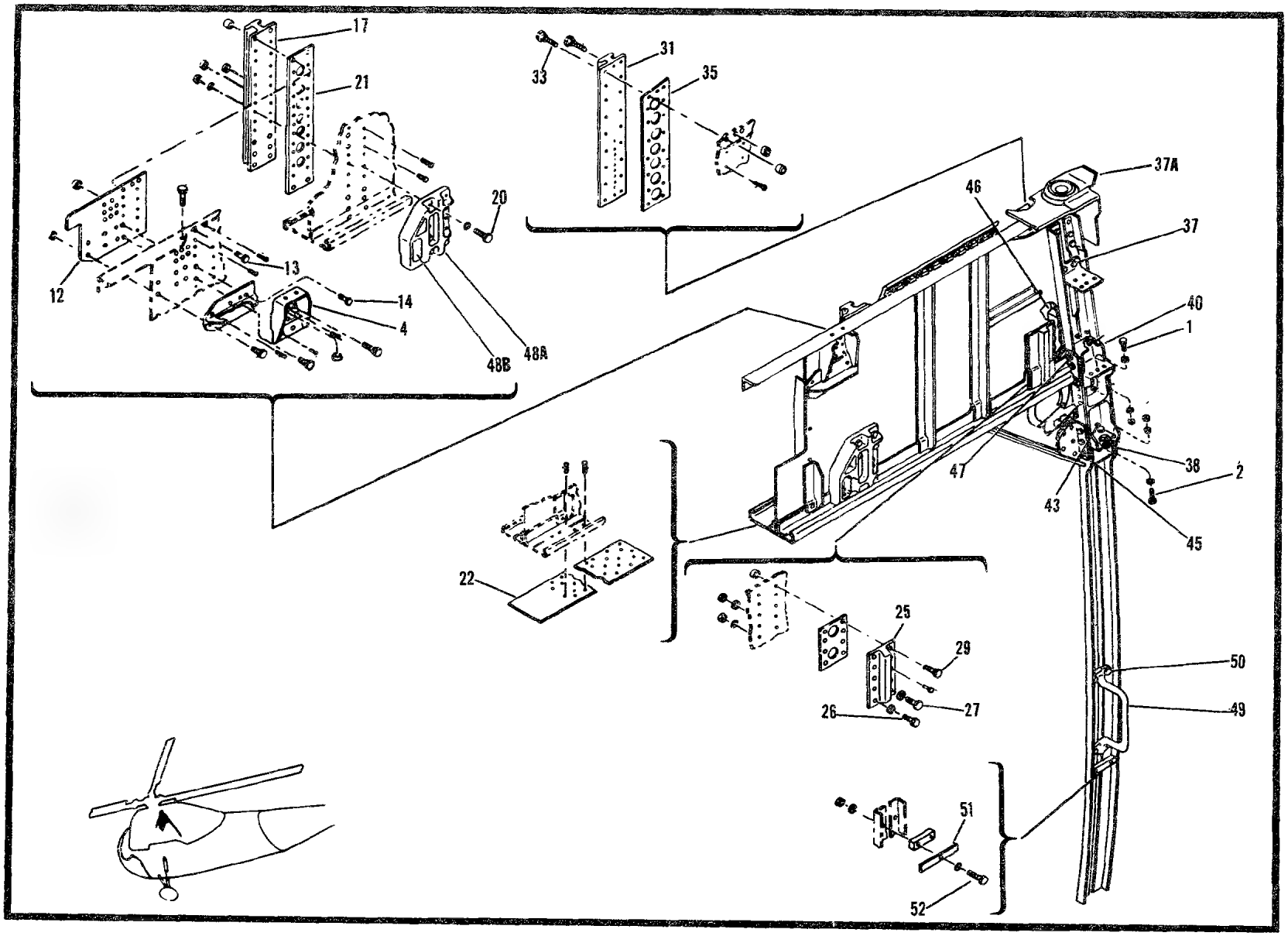

612 Figure 52. Right Hand Bulkhead Installation (USBL EFF 53-4475 thru 56-4312)

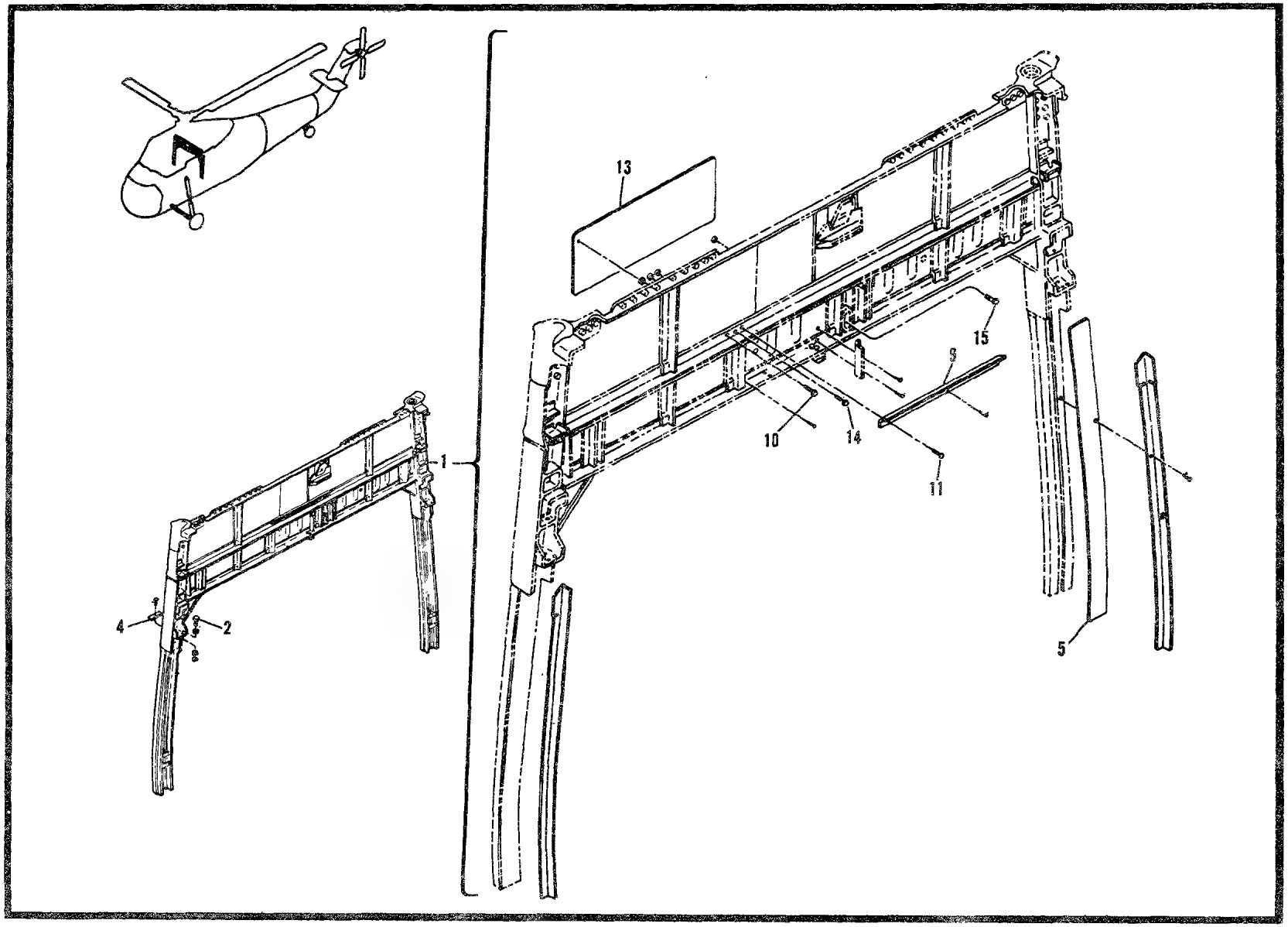

Figure 53. Bulkhead Installation (USBL EFF 56-4313 and Subsequent)

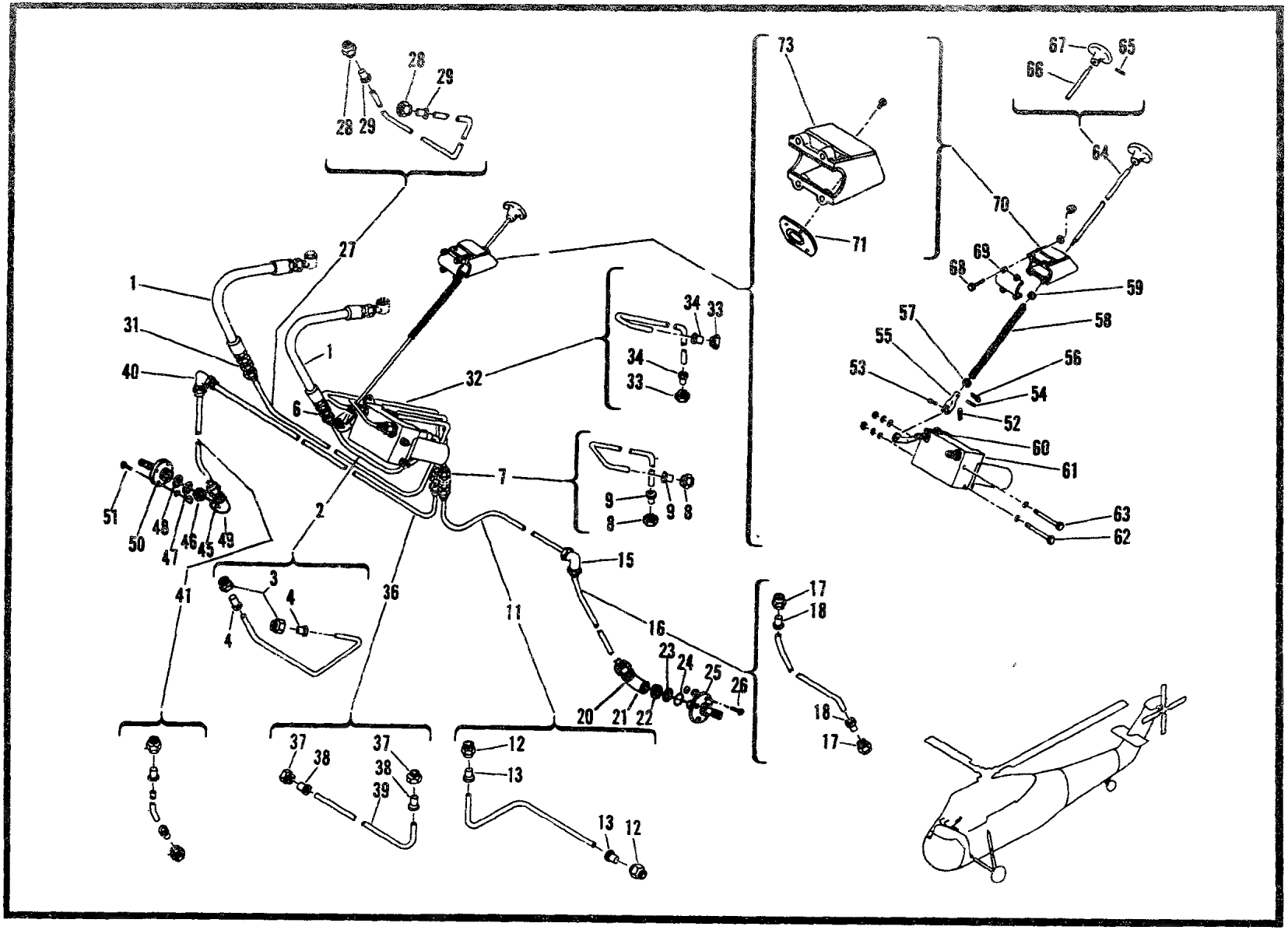

Figure 54. Main Wheel Brake System Installation

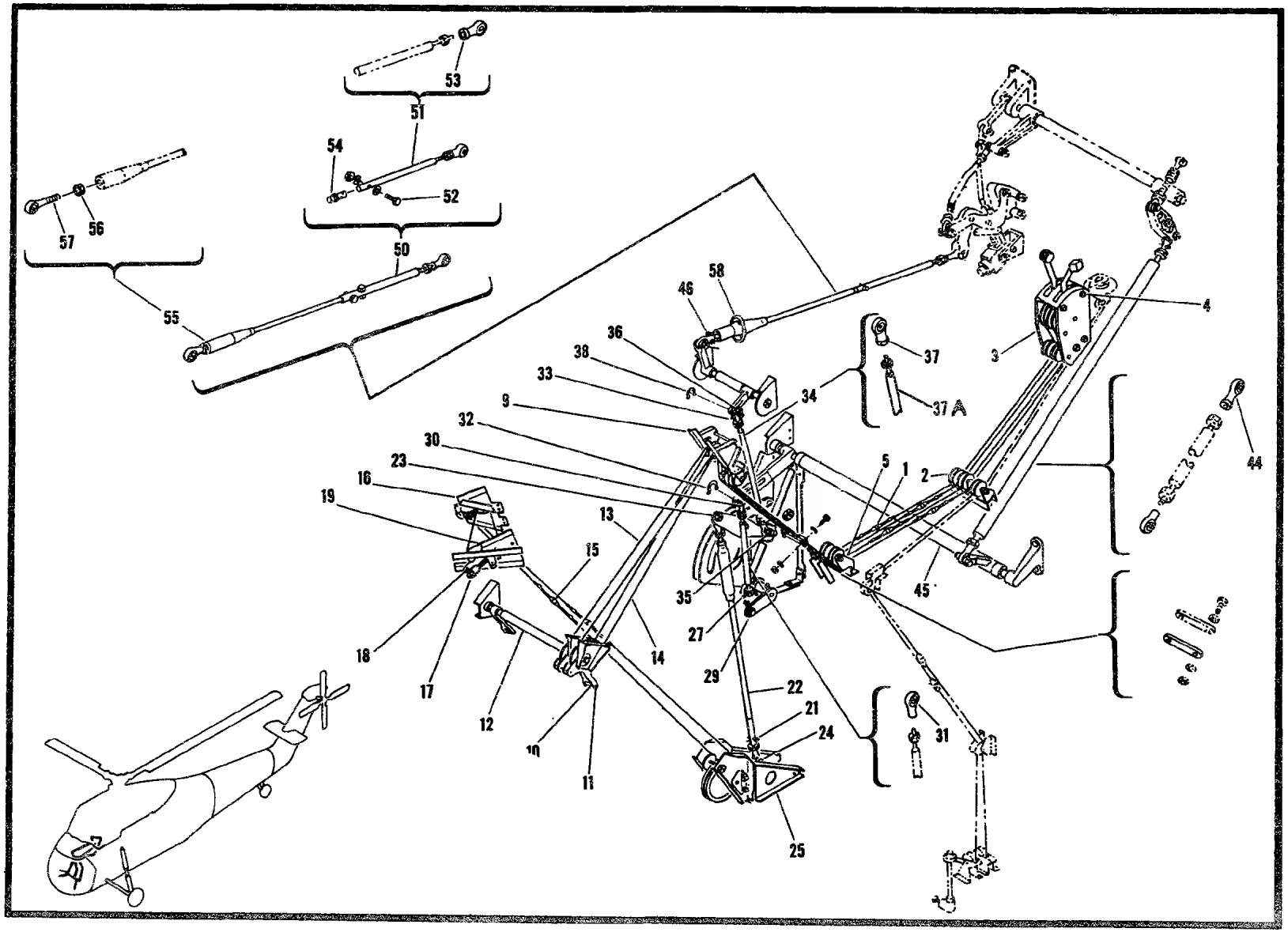

Figure 55. Engine Throttle Carburetor Air and Mixture Controls Installation (USBL EFF 53-4475 thru 54-3050) (Sheet 1 of 2)

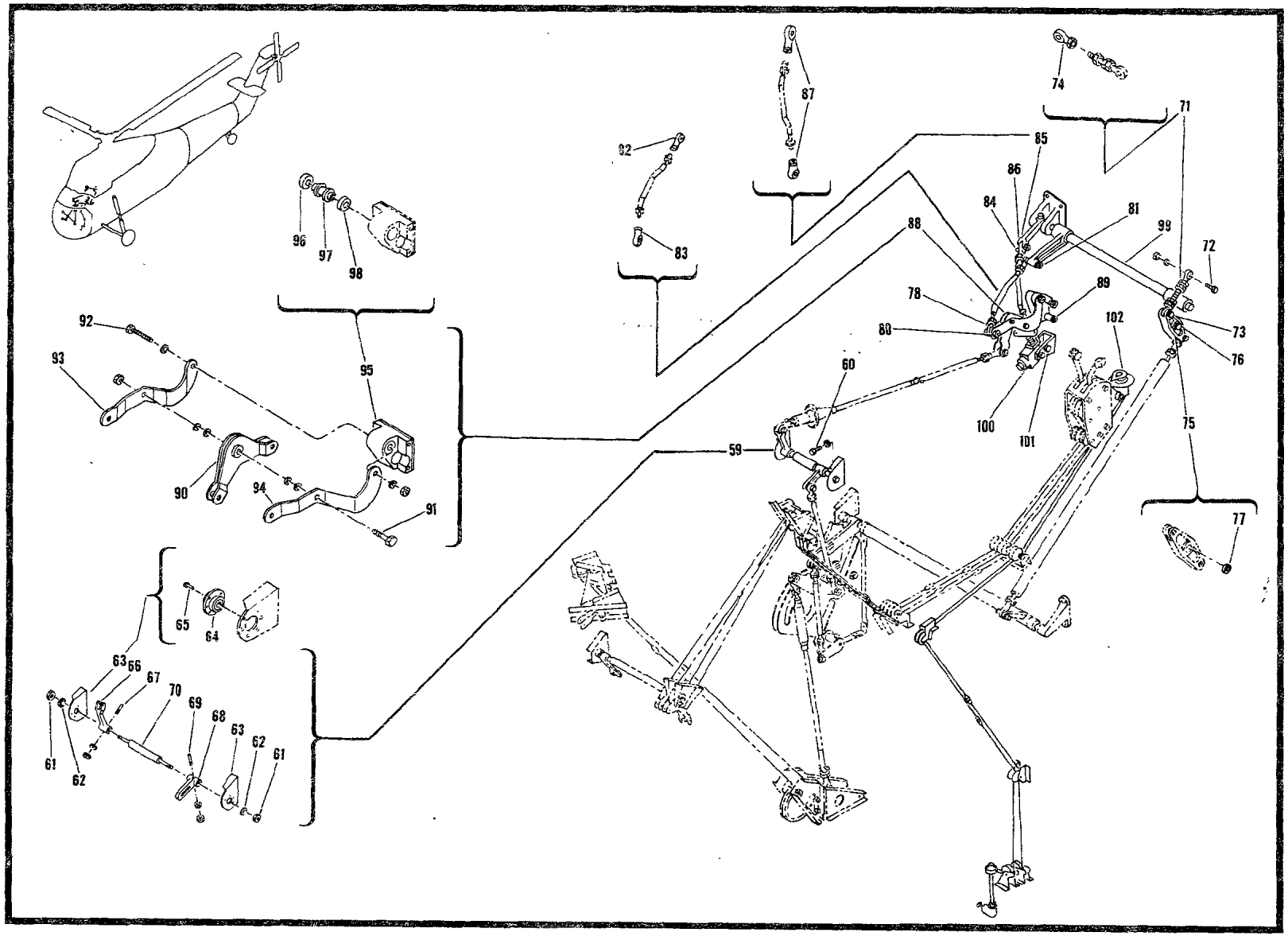

Figure 55. Engine Throttle Carburetor Air and Mixture Controls Installation (USBL EFF 53-4475 thru 54-3050) (Sheet 2 of 2)

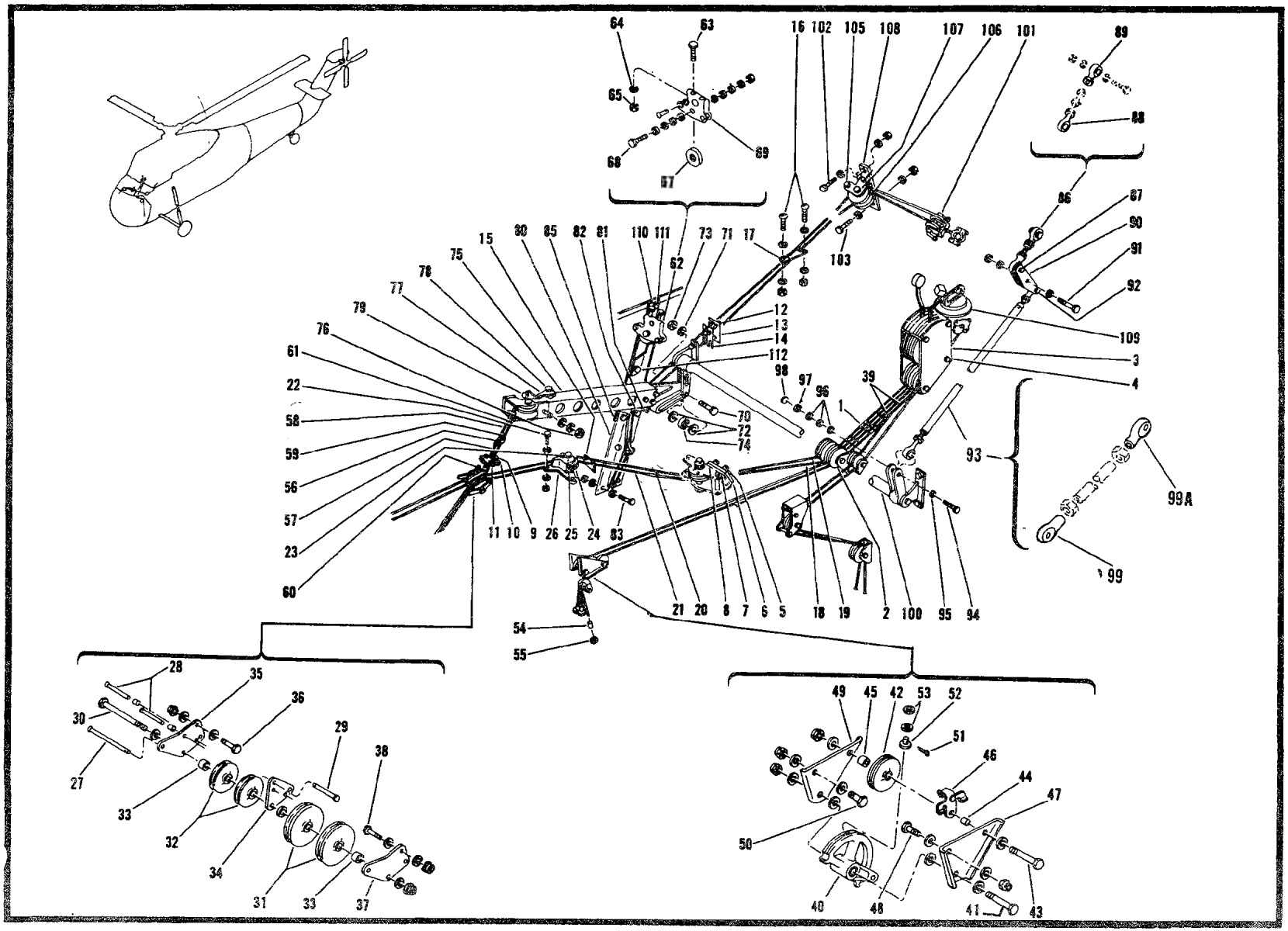

Figure 56. Engine Throttle Carburetor Air and Mixture Controls Installation (USBL EFF 55-4462 and Subsequent)

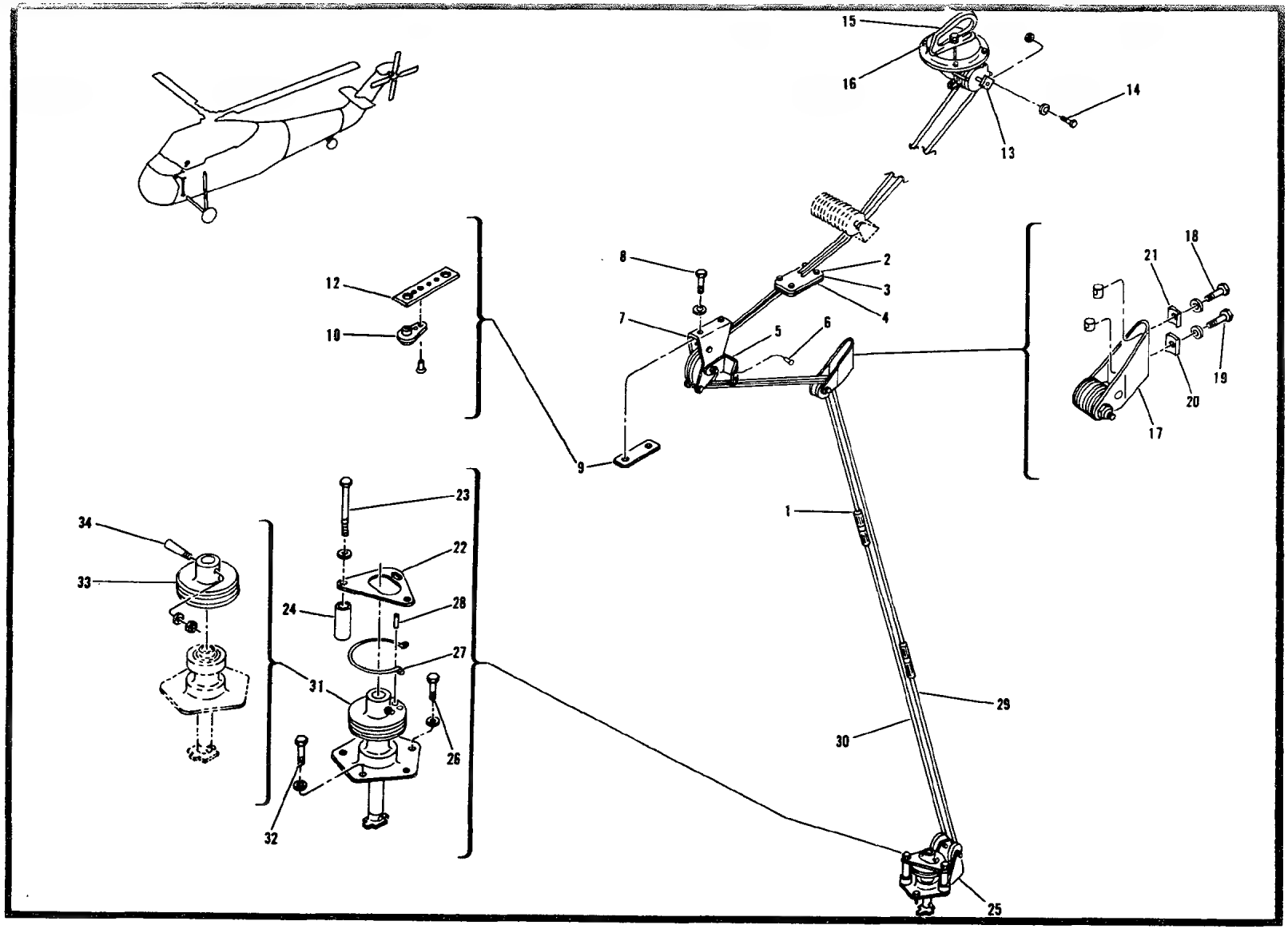

Figure 57. Fuel Selector Valve Control Installation

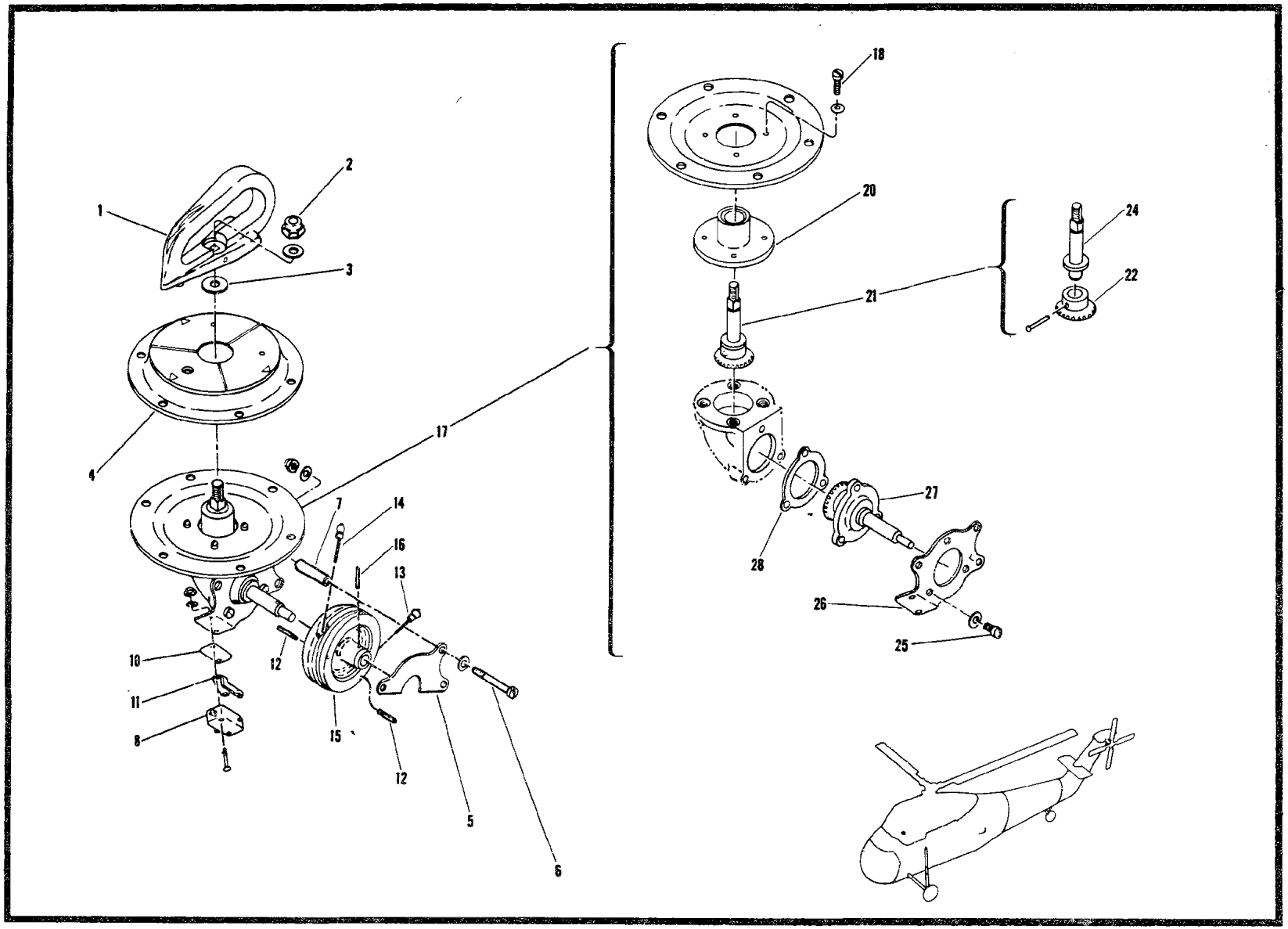

Figure 58. Control Assembly, Fuel Selector Valve

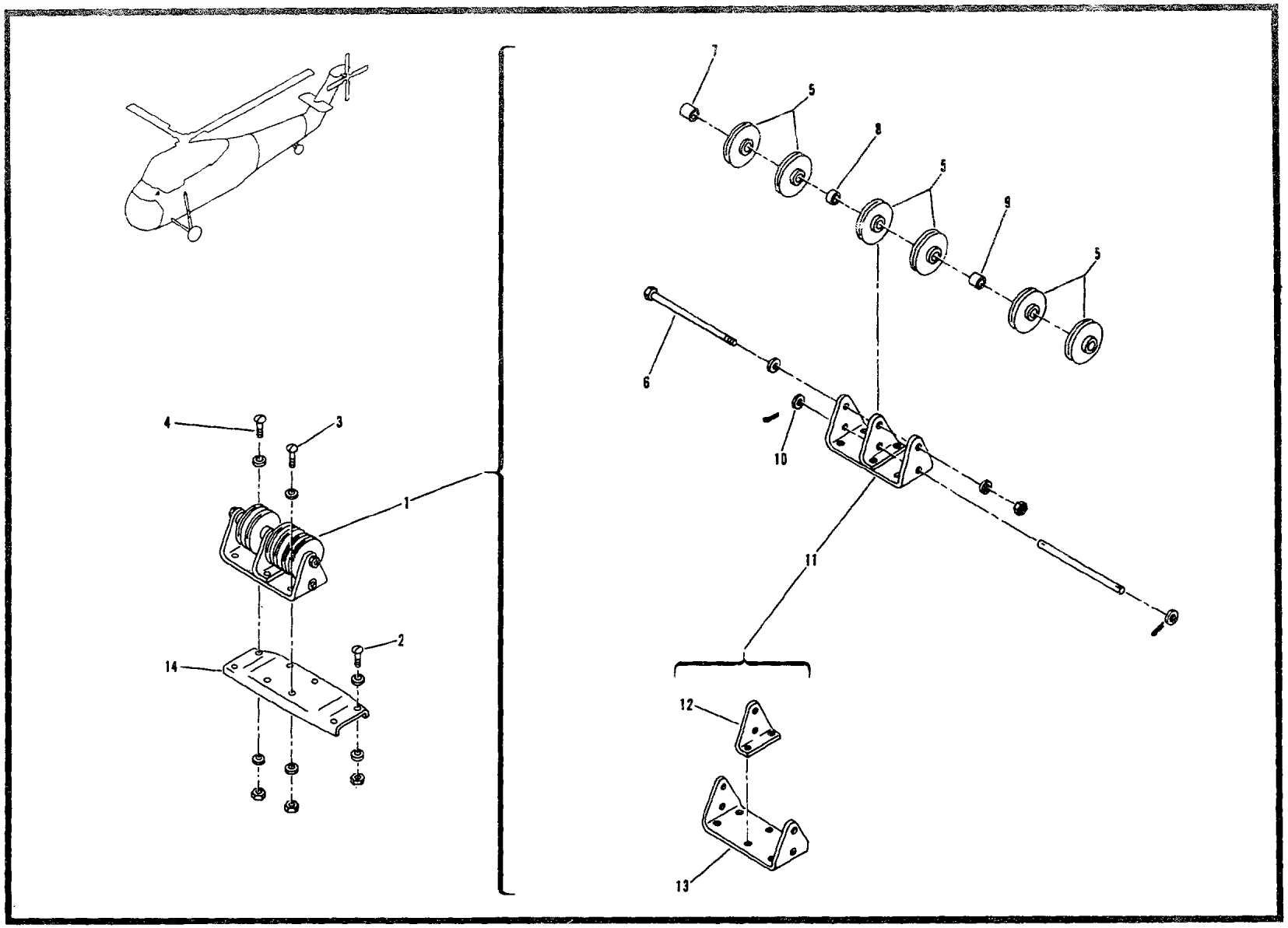

Figure 59. Mixture and Selector Valve Controls Pulley Installation
(USBL EFF 53-4475 thru 54-3050)

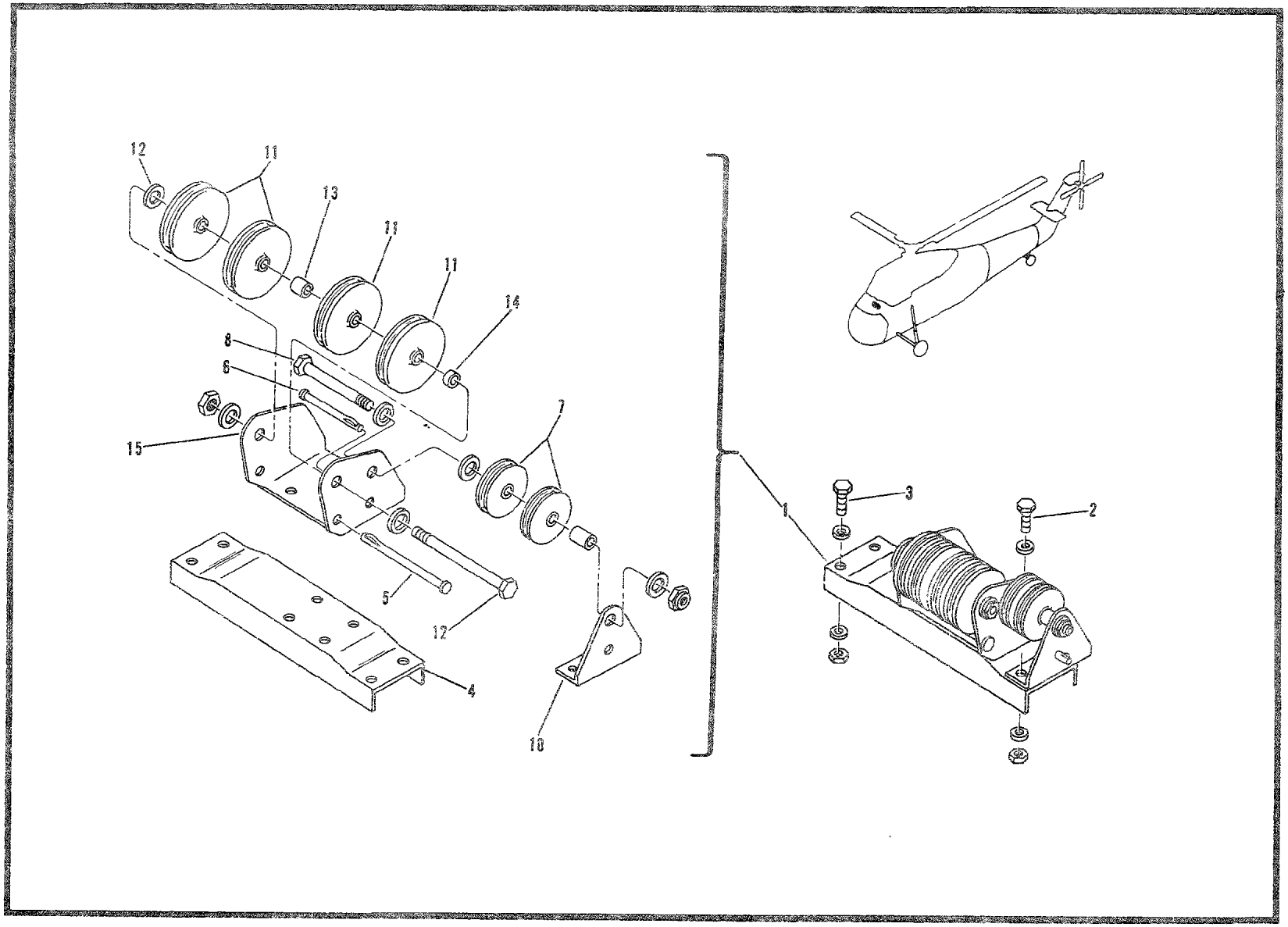

Figure 60. Mixture and Selector Valve Controls Pulley Installation
(USBL EFF 55-4462 and Subsequent)

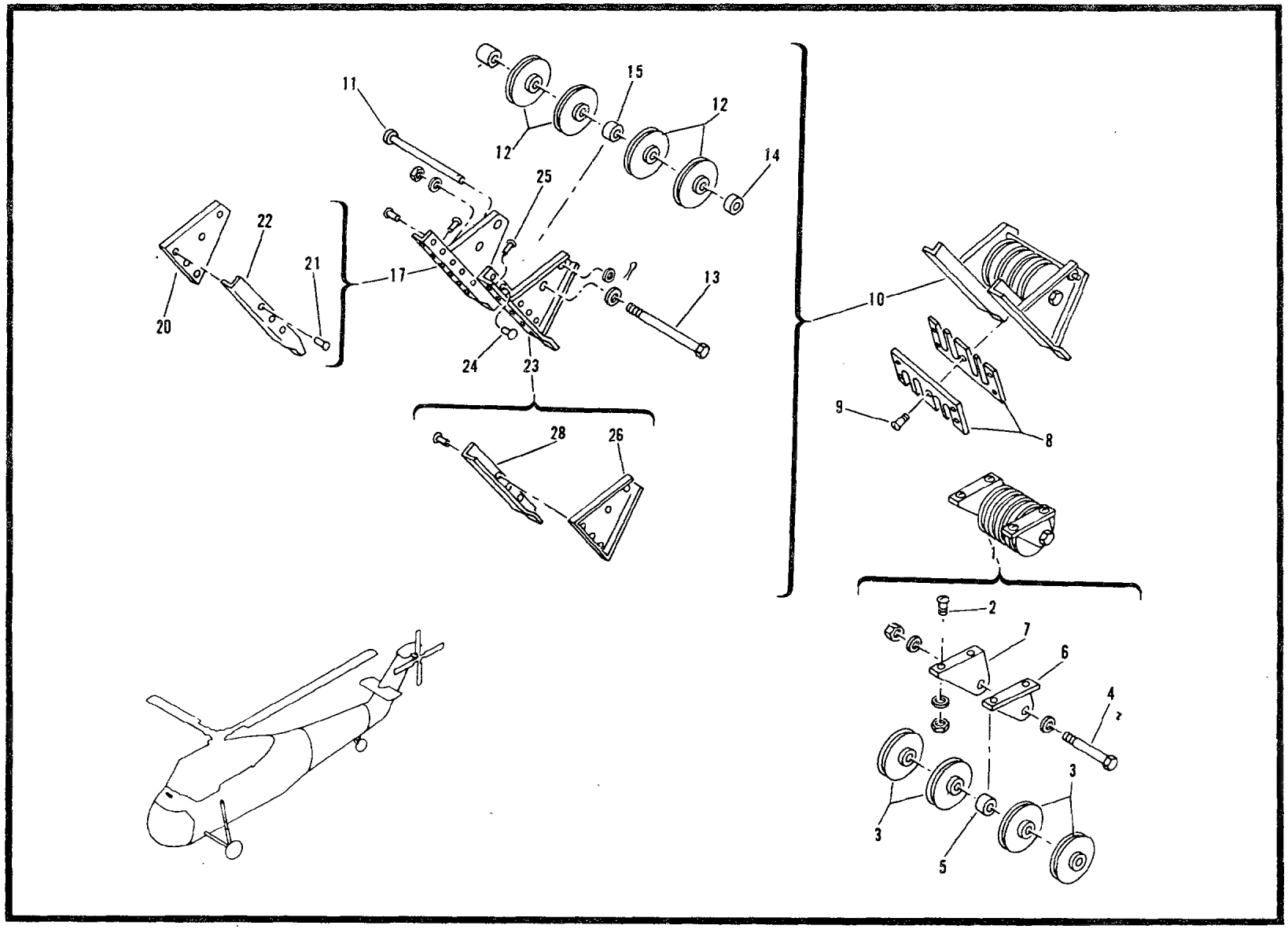

Figure 61. Mixture and Selector Valve Controls Pulley Installation (USBL EFF 53-4475 thru 54-3050)

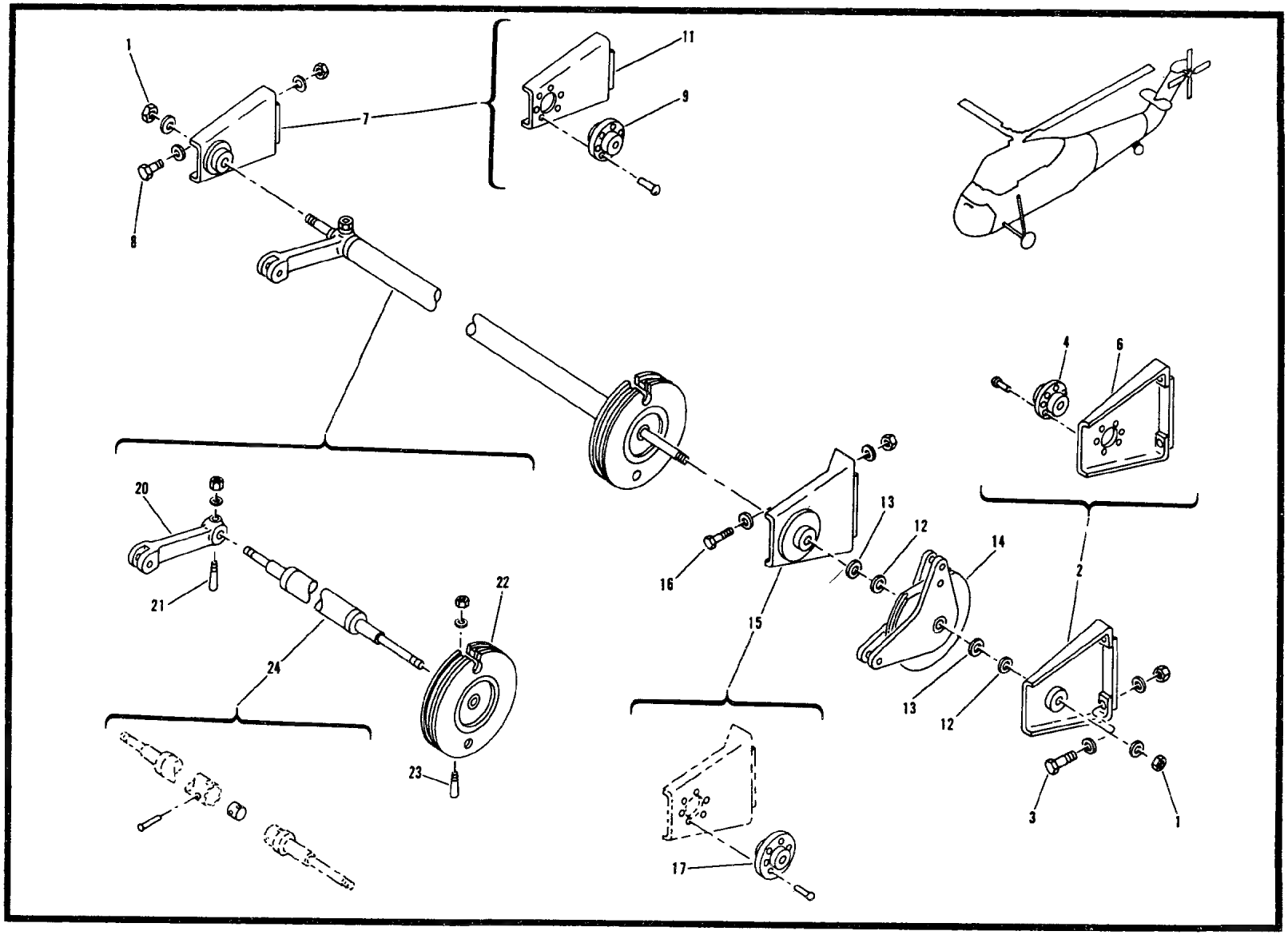

Figure 62. Mixture and Carburetor Air Controls Pulley and Torque Tube Installation (USBL EFF 53-4475 thru 54-3050)

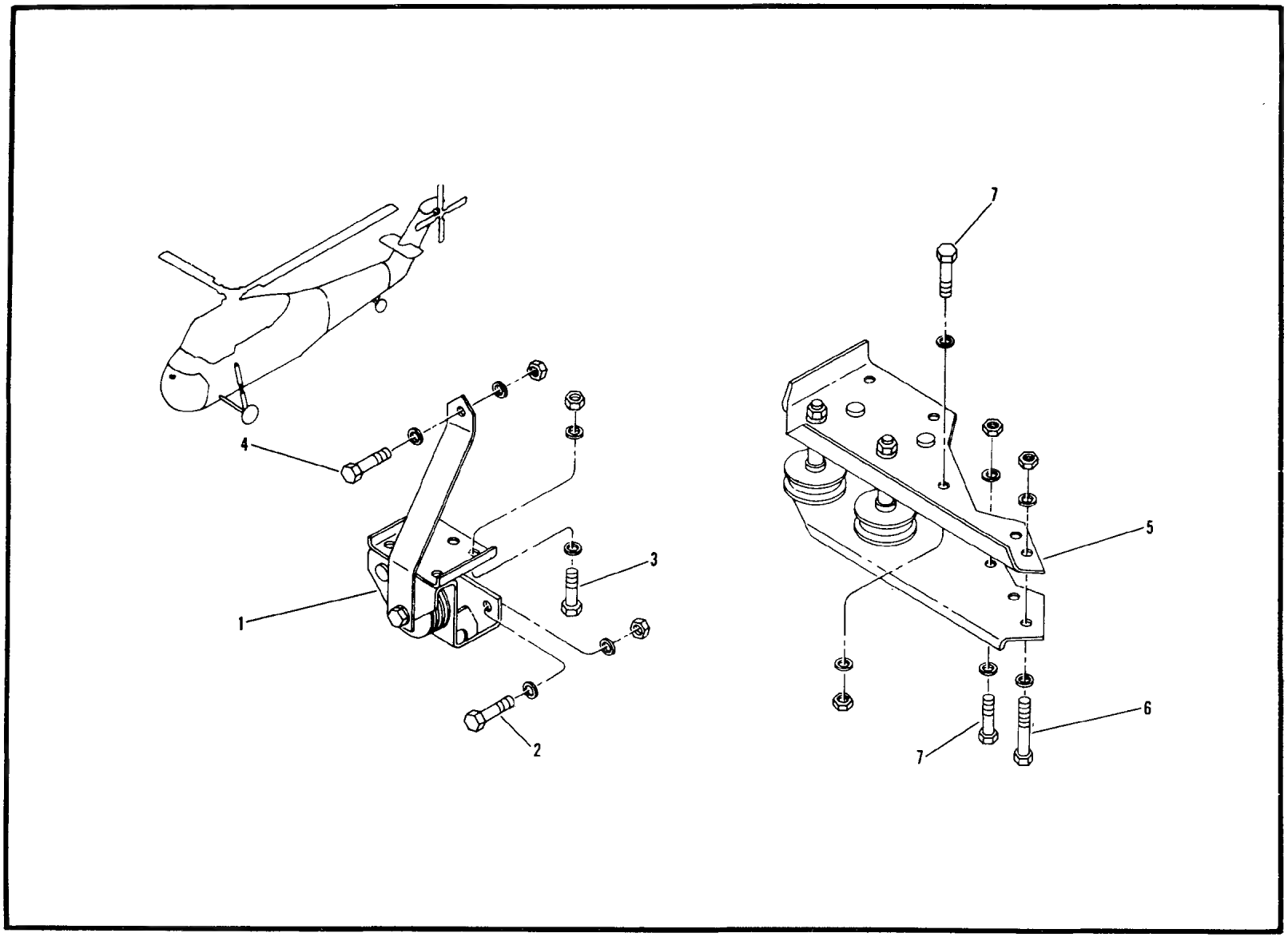

Figure 63. Throttle Control Pulley Installation (USBL EFF 53-4475 thru 54-3050)

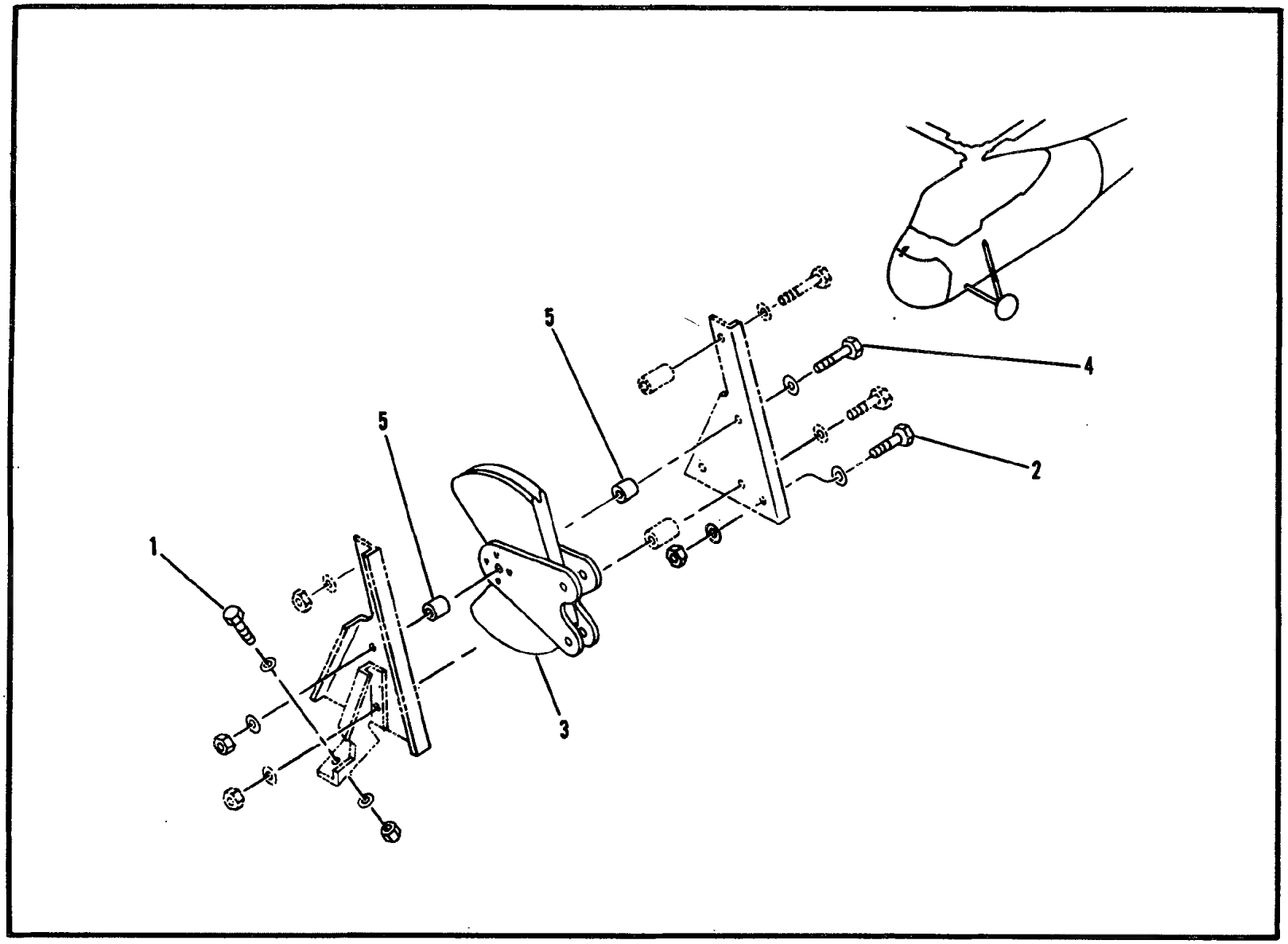

Figure 64. Throttle Pulley Bracket Installation (USBL EFF 53-4475 thru 54-3050)

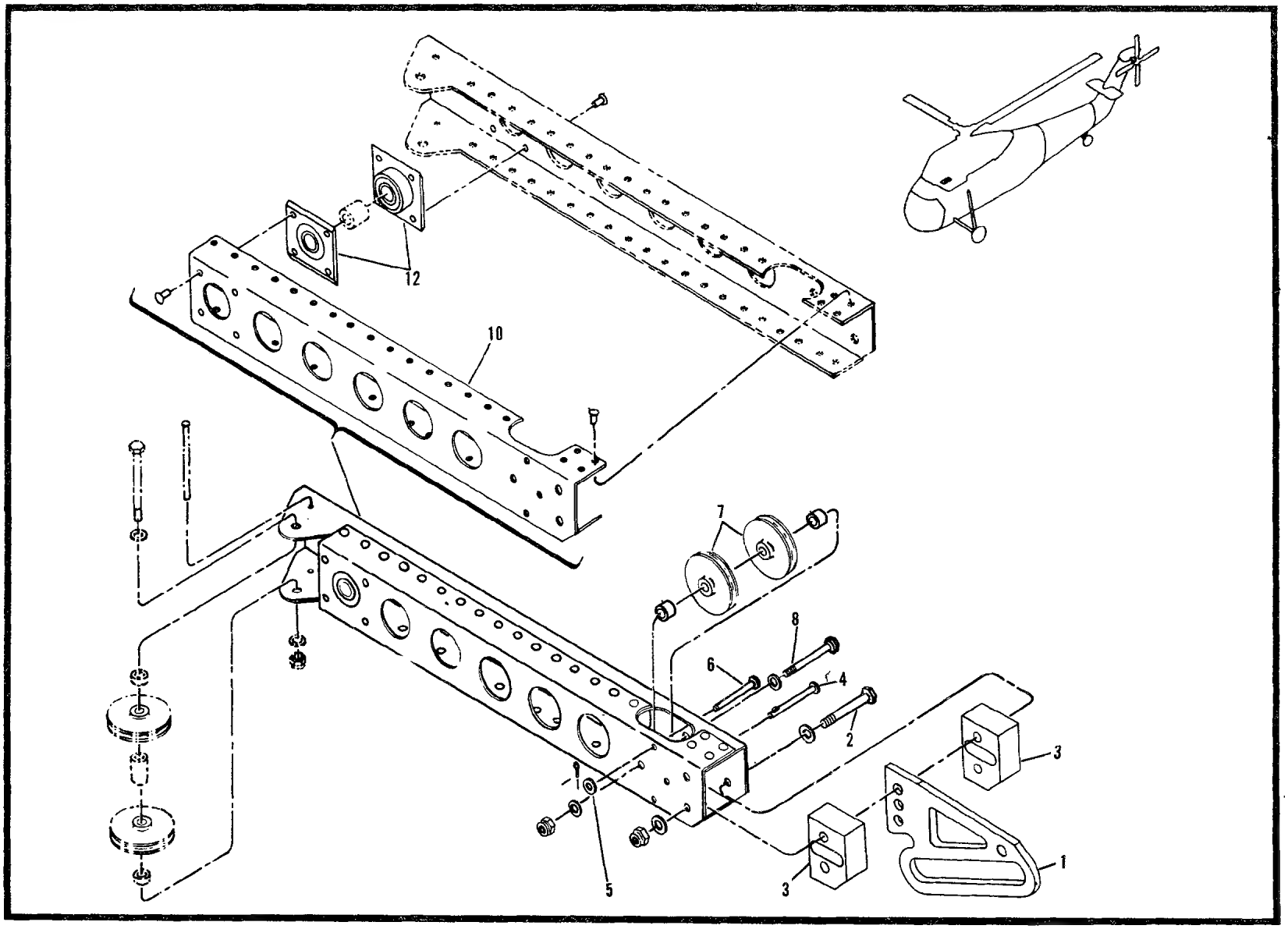

Figure 65. Arm Assembly-Throttle Control (USBL EFF 55-4462 and Subsequent)

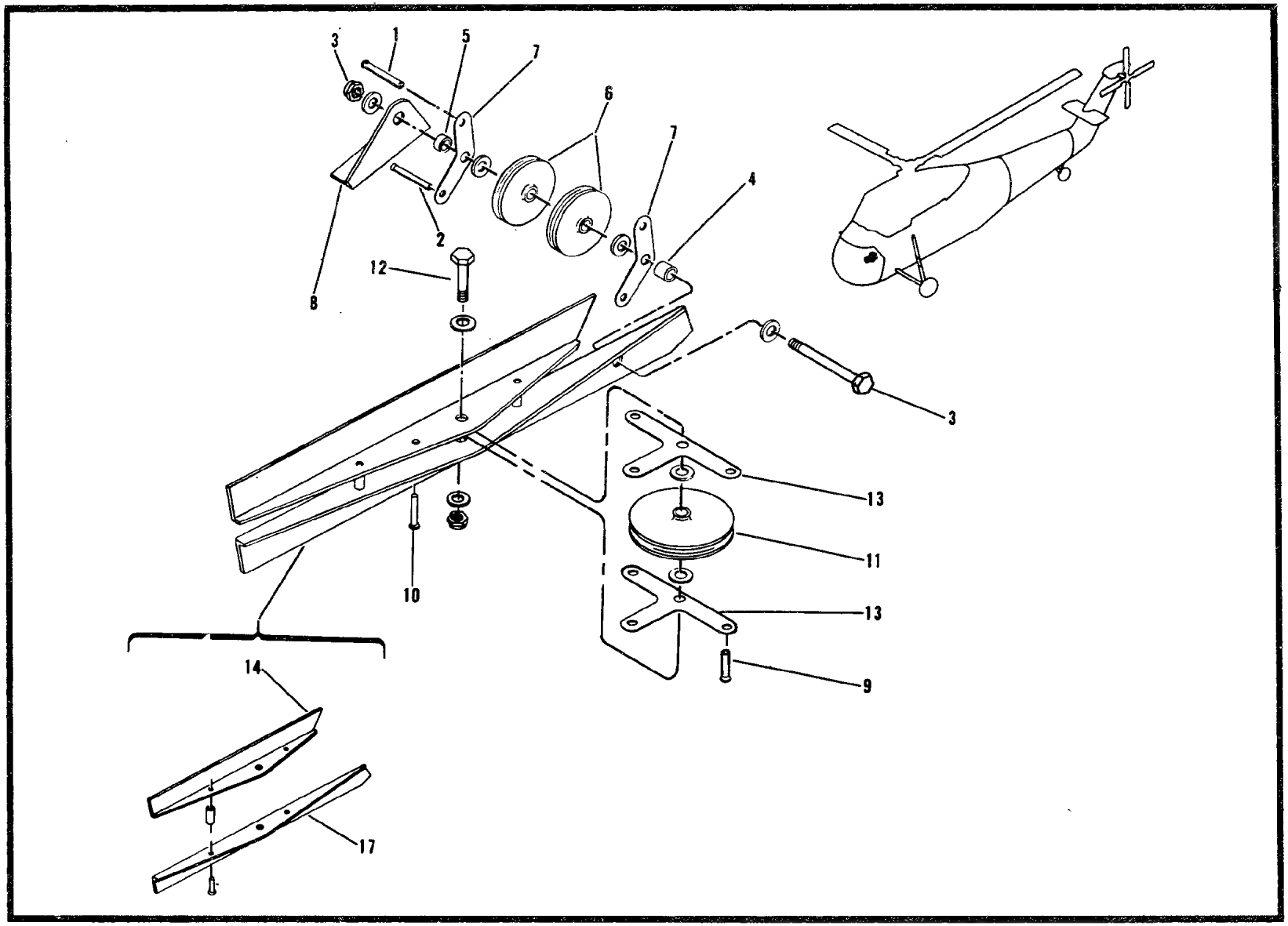

Figure 66. Bracket Assembly-Throttle Control Pulley (USBL EFF 55-4462 and Subsequent)

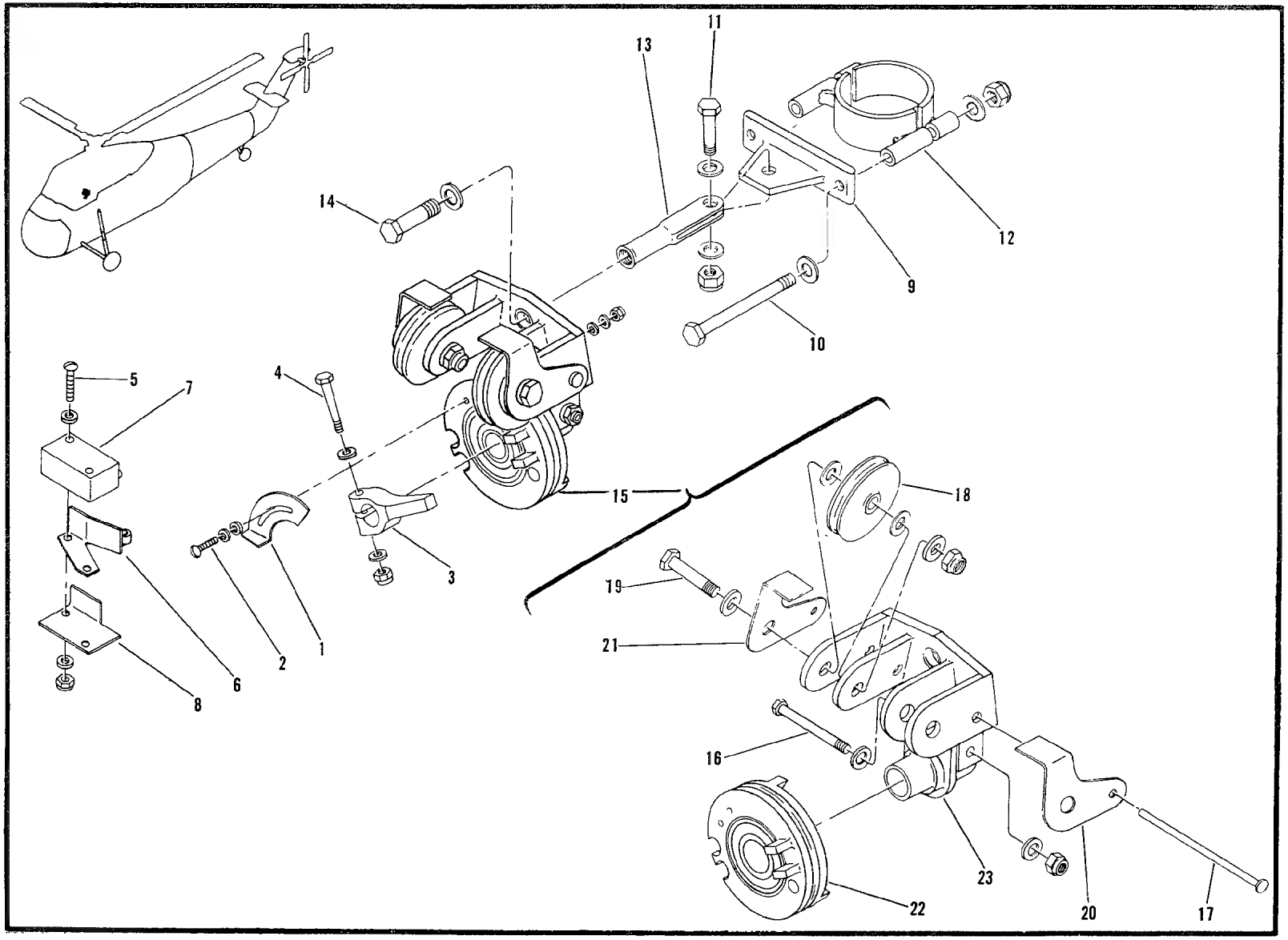

Figure 67. Throttle Control Pulley Bracket Installation (USBL EFF 55-4462 and Subsequent)

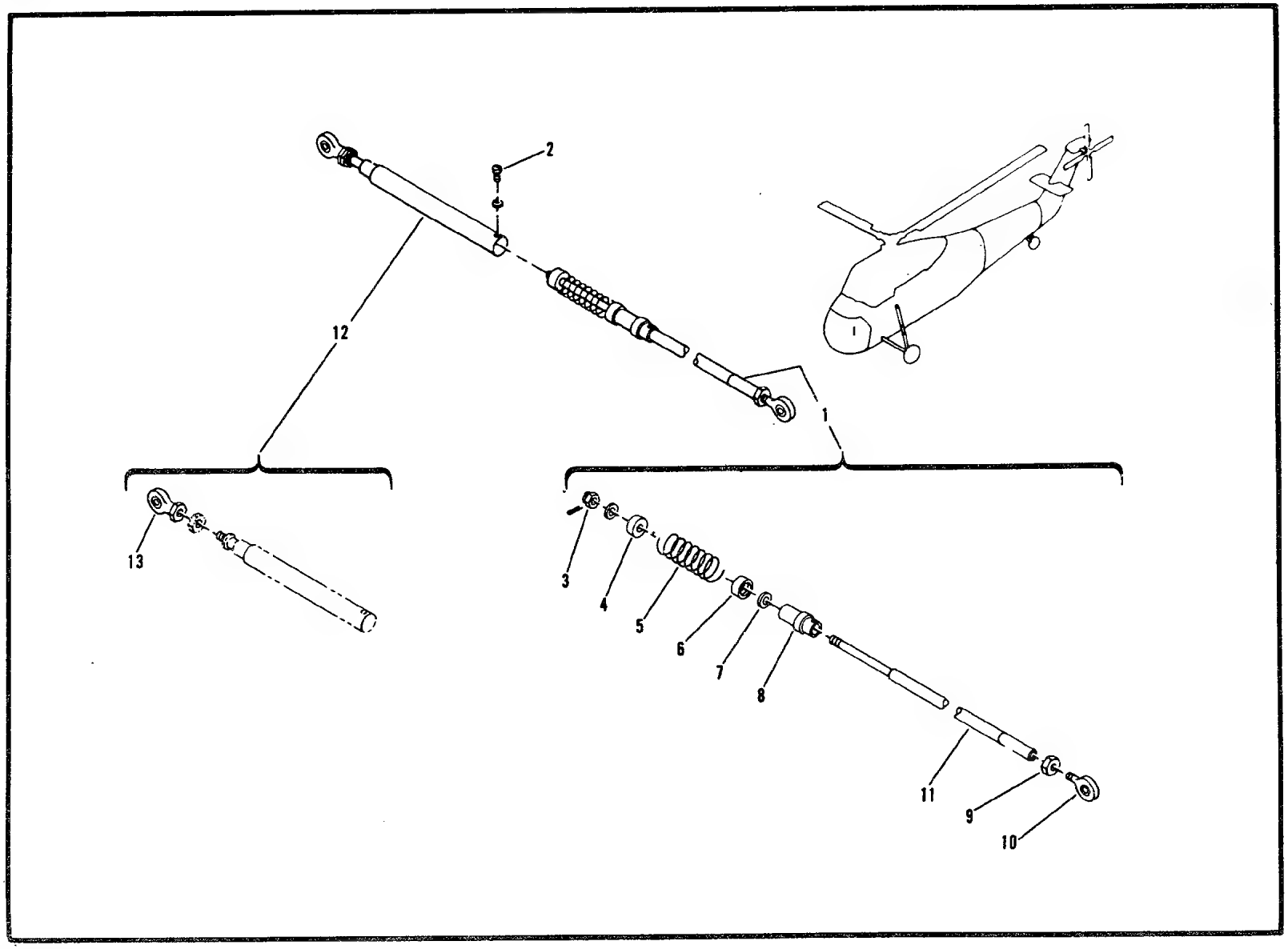

Figure 68. Strut Assembly—Synchronized Throttle Control

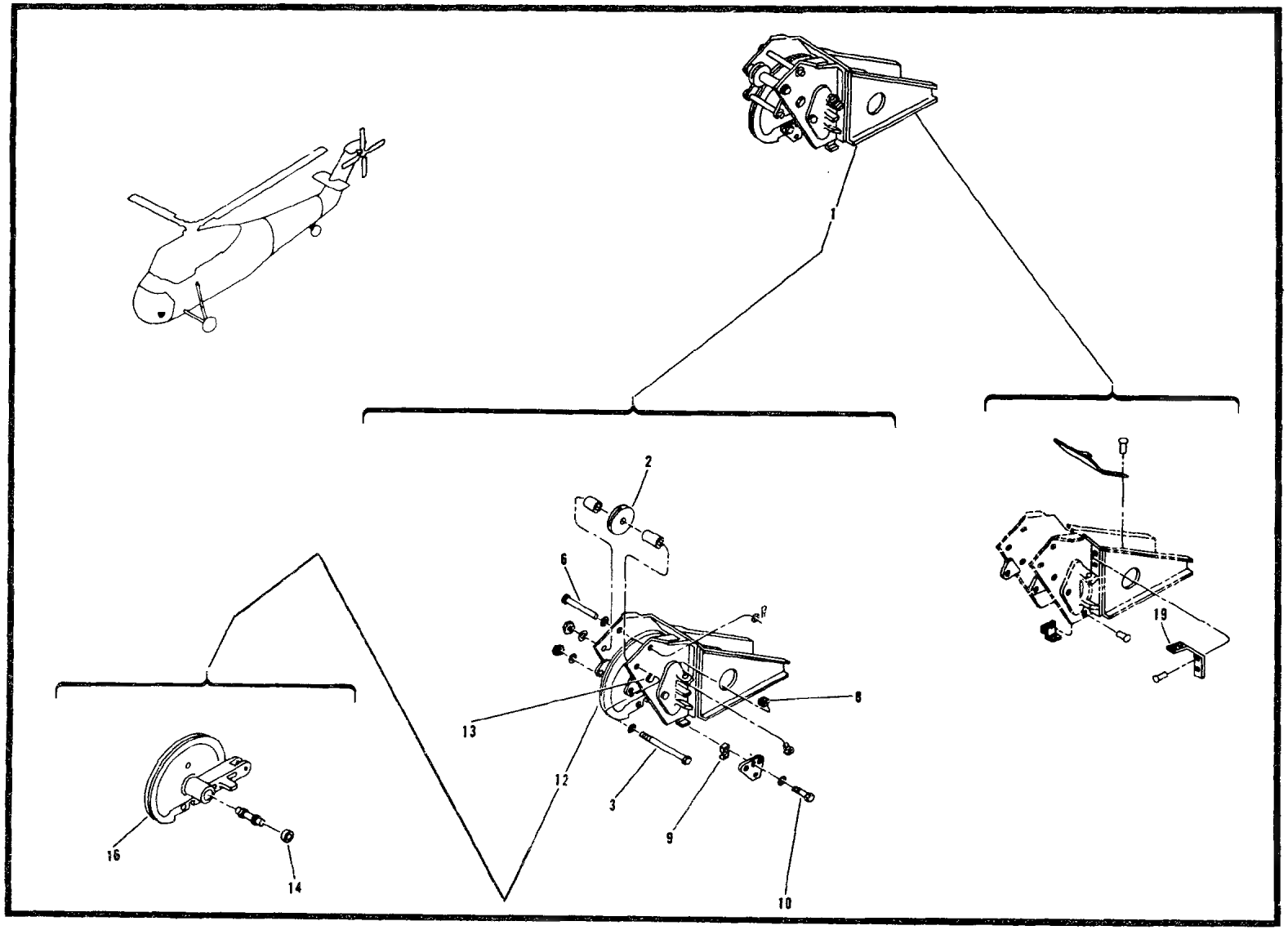

Figure 69. Throttle Control Pulley Installation (USBL EFF 53-4475 thru 54-3050)

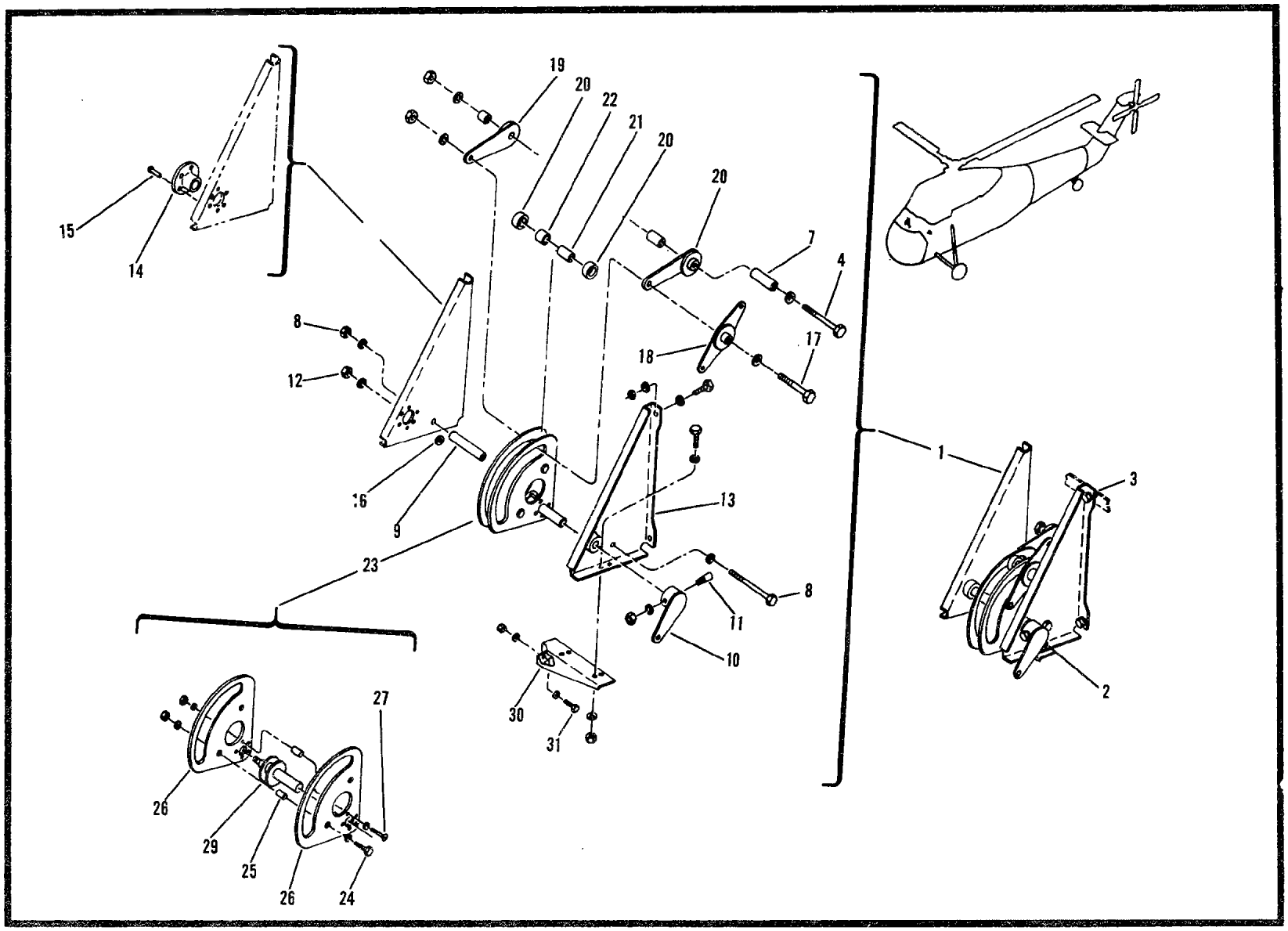

Figure 70. Throttle Synchronizer Installation (USBL EFF 53-4475 thru 54-3050)

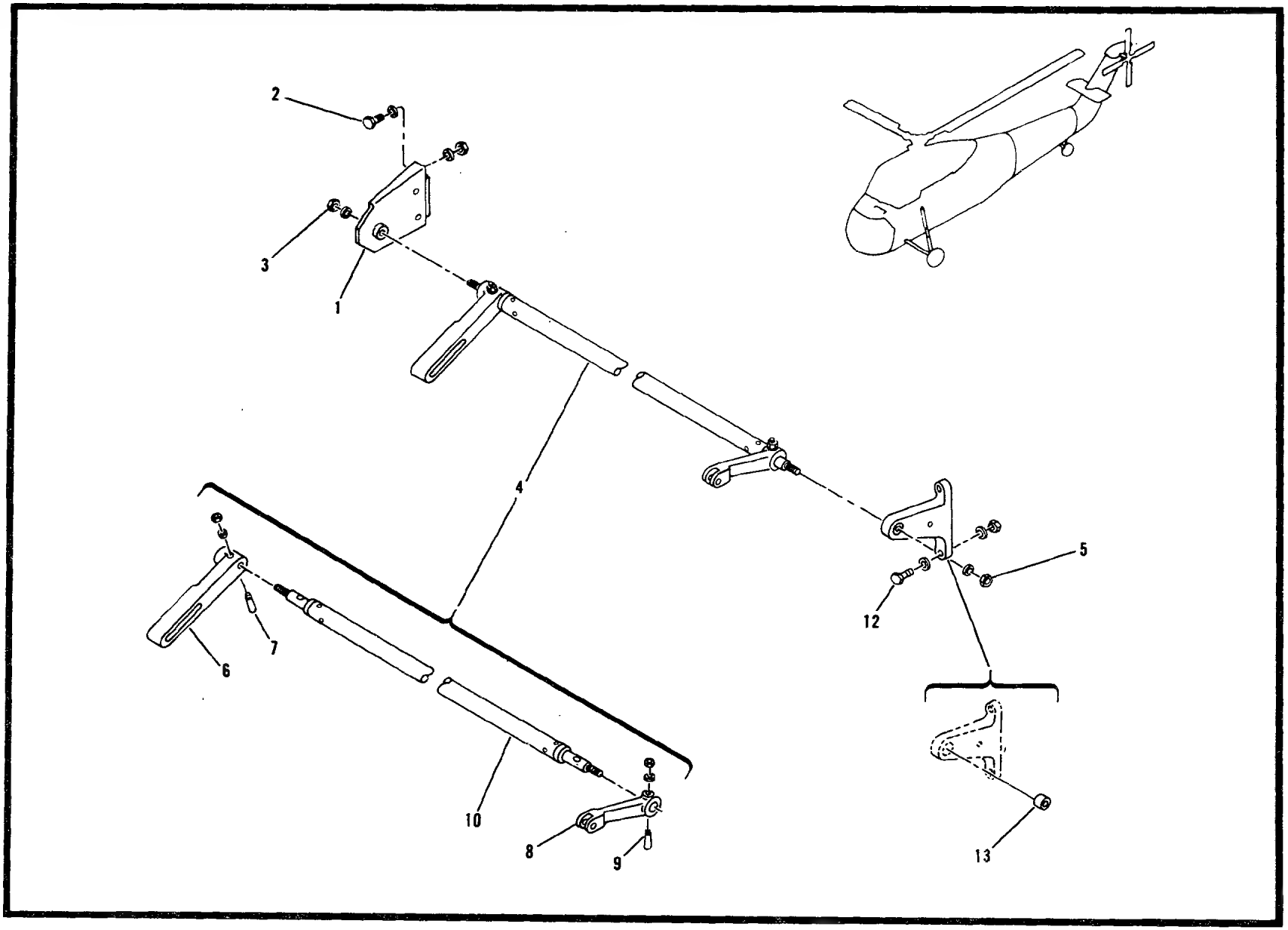

Fiaure 71. Servo Actuating Torque Tube Installation (USBL EFF 53-4475 thru 54-3050)

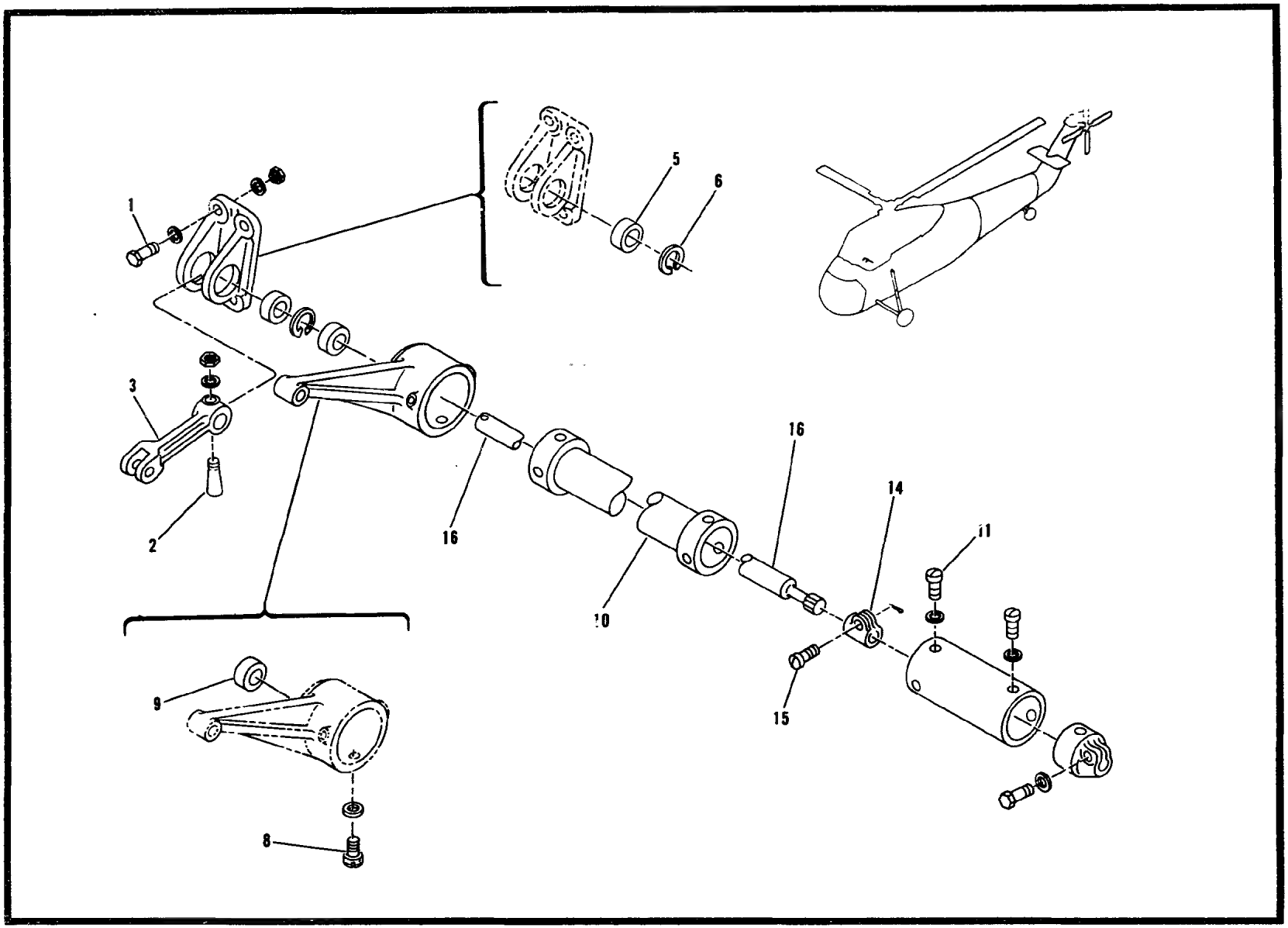

633 Figure 72. Throttle Control Torque Tube Installation (USBL EFF 53-4475 thru 54-3050)

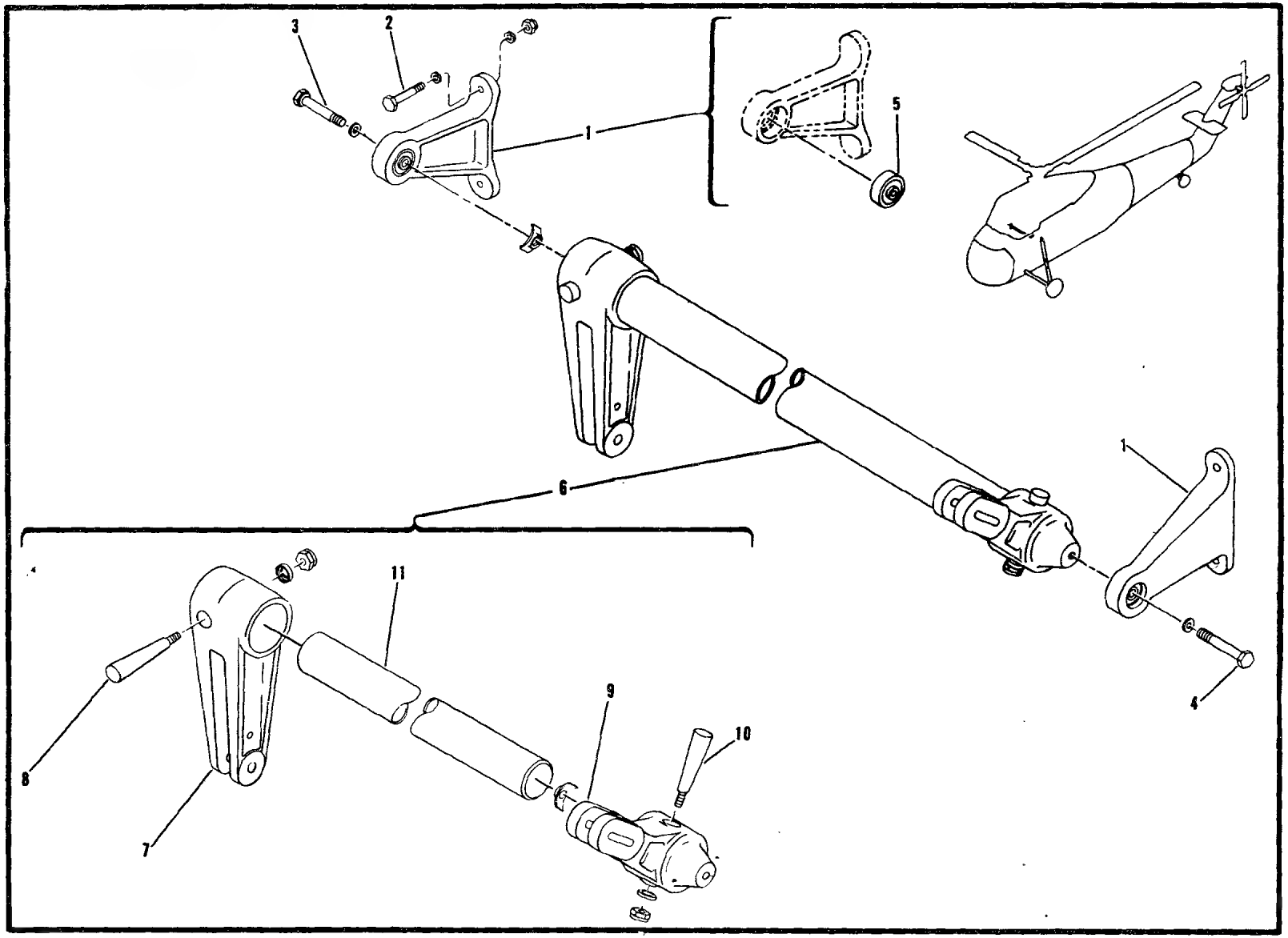

Figure 73. Throttle Control Torque Tube Installation (USBL EFF 55-4462 and Subsequent)

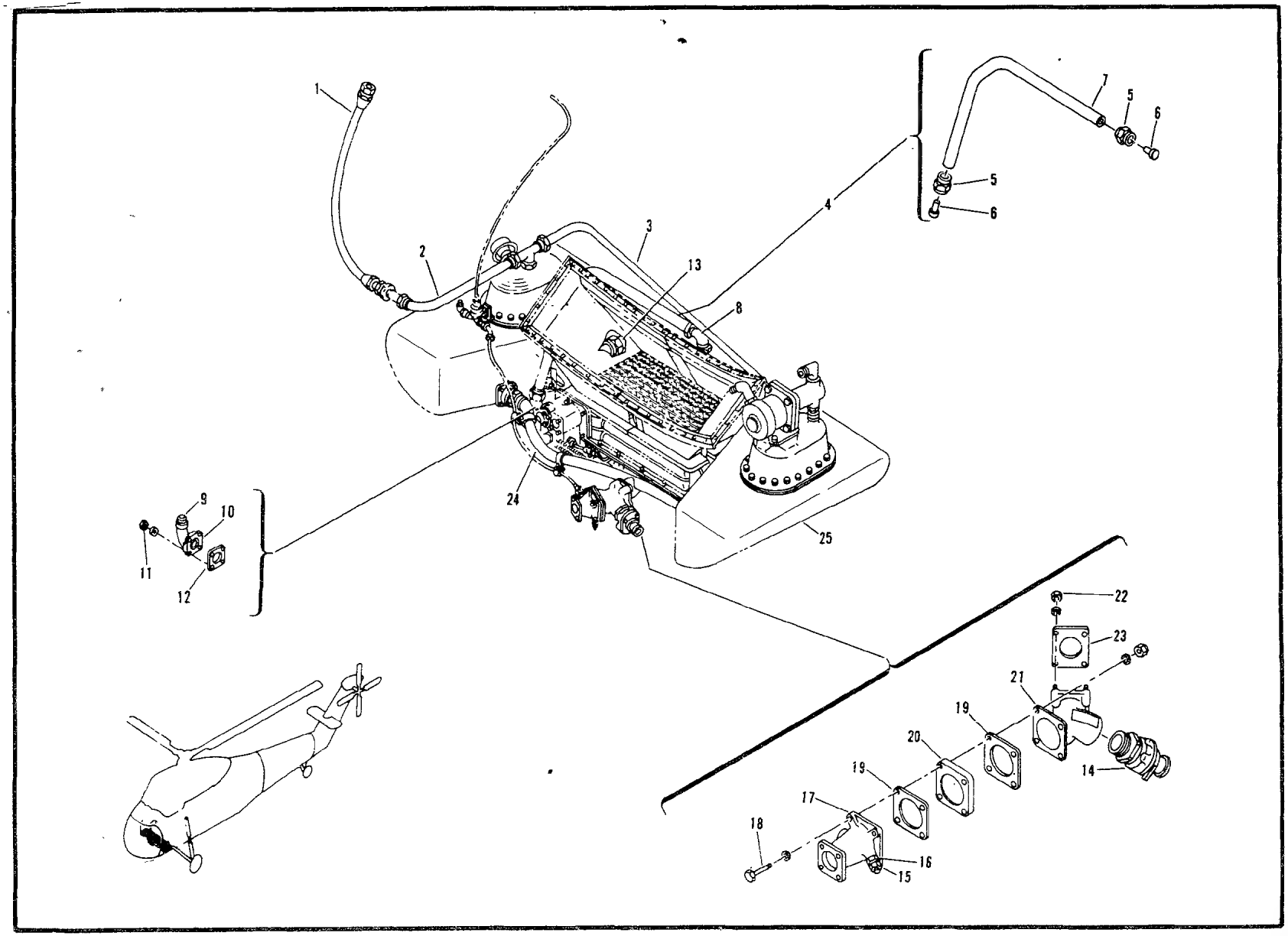

Figure 74. Lubrication System (USBL EFF 53-4475 thru 56-4312) (Sheet 1 of 2)

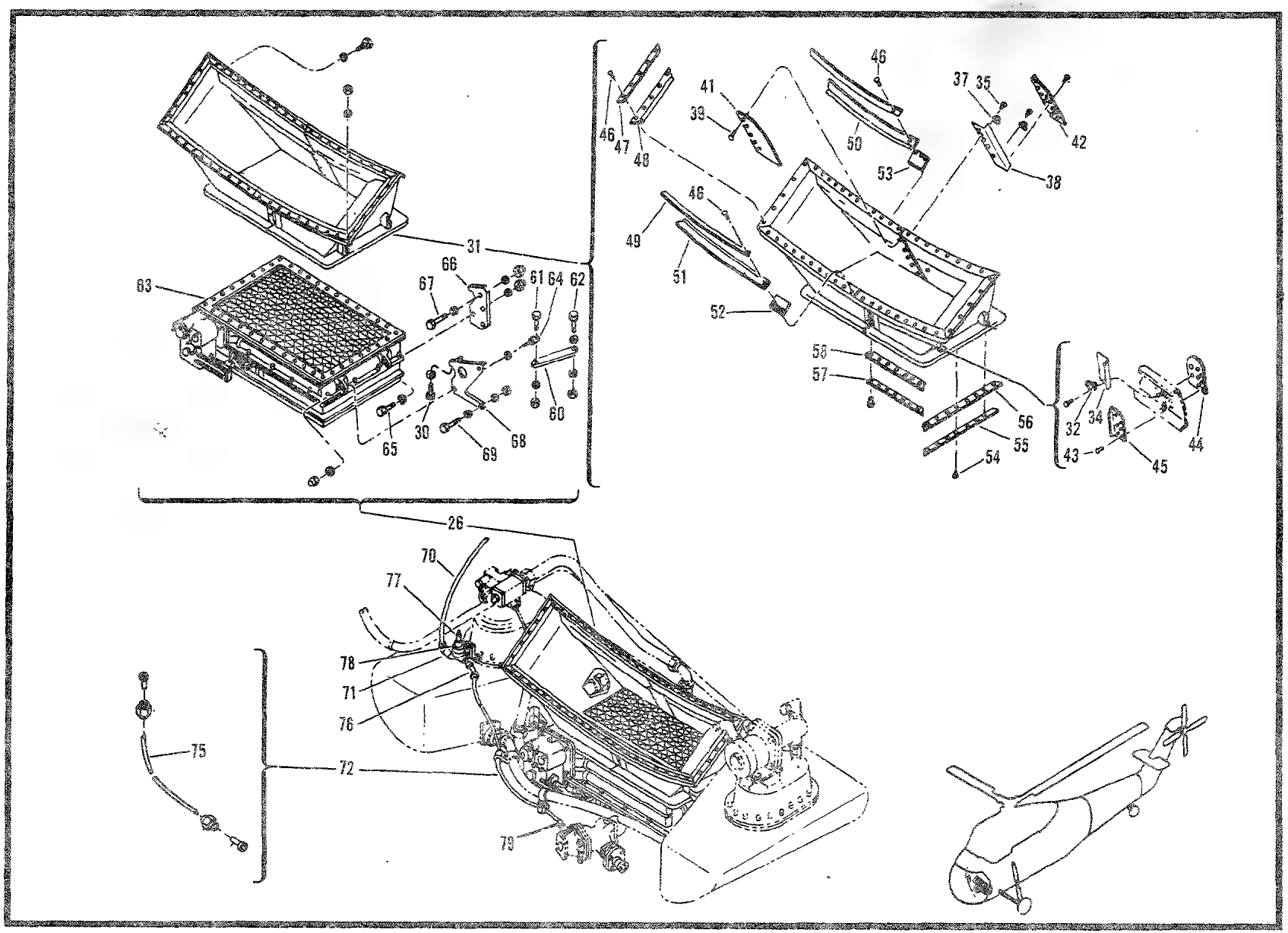

Figure 74. Lubrication System (USBL EFF 53-4475 thru 56-4312) (Sheet 2 of 2)

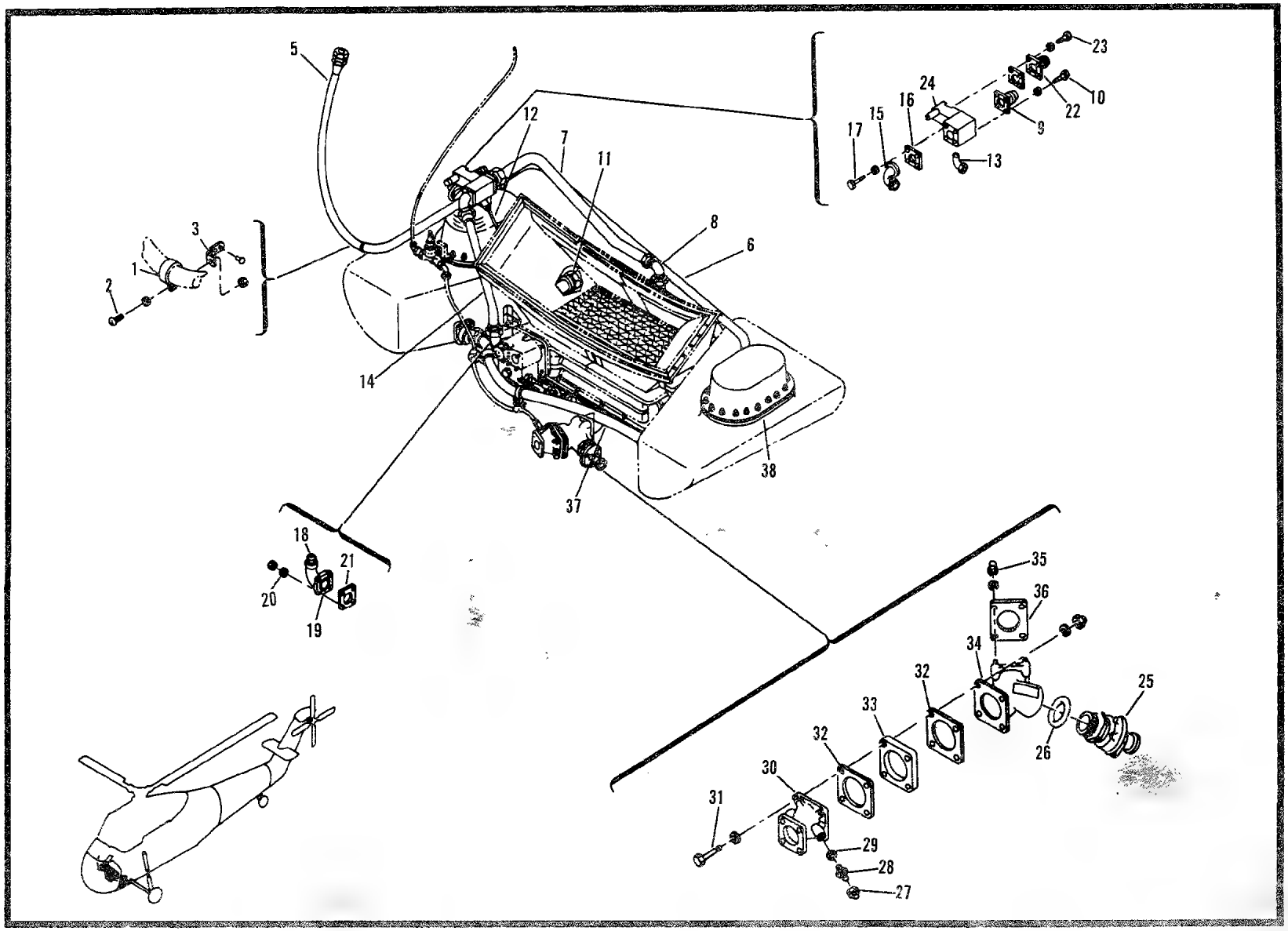

Figure 75. Lubrication System (USBL EFF 56-4313 and Subsequent) (Sheet 1 of 2)

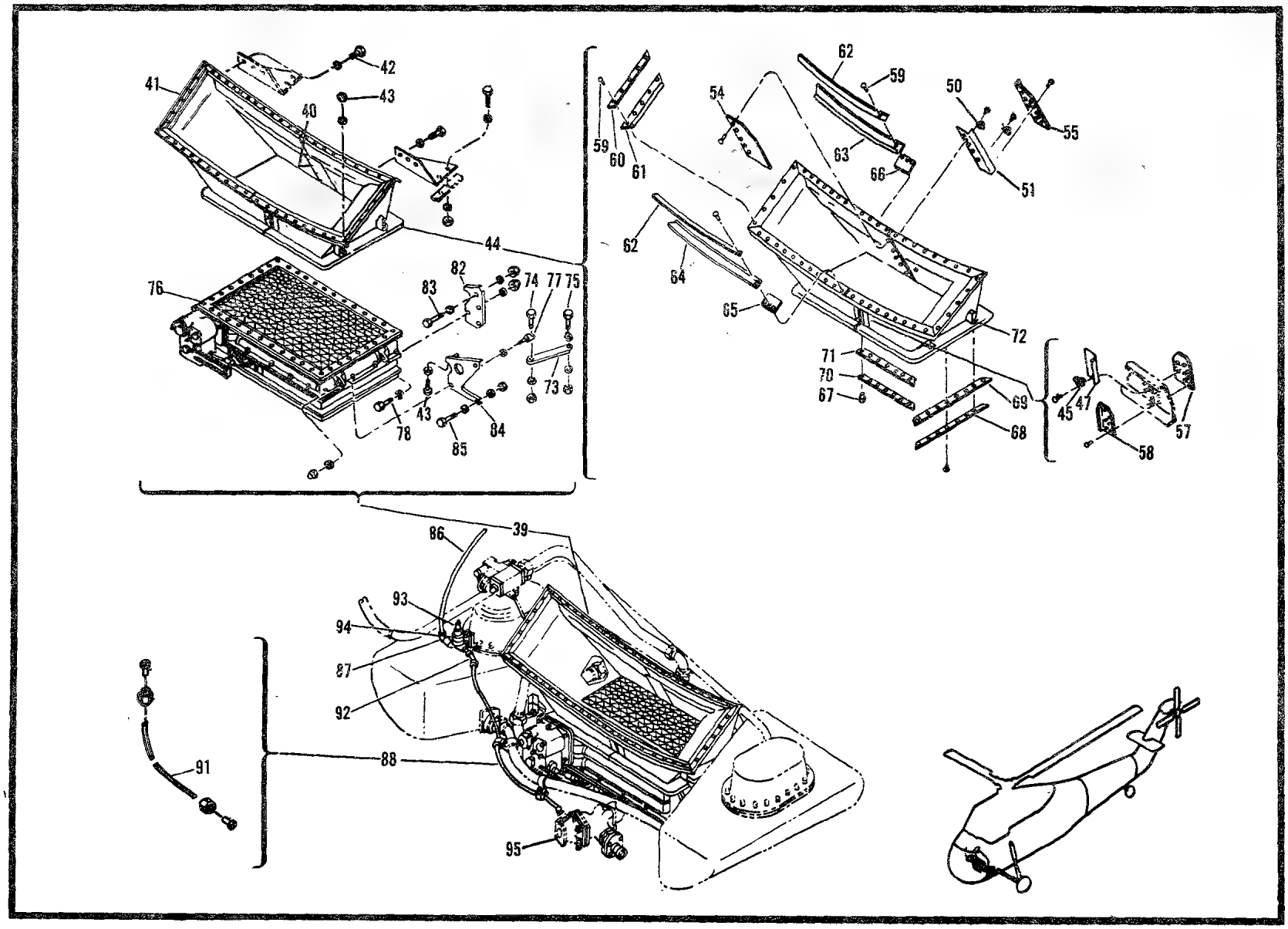

Figure 75. Lubrication System (USBL EFF 56-4313 and Subsequent) (Sheet 2 of 2)

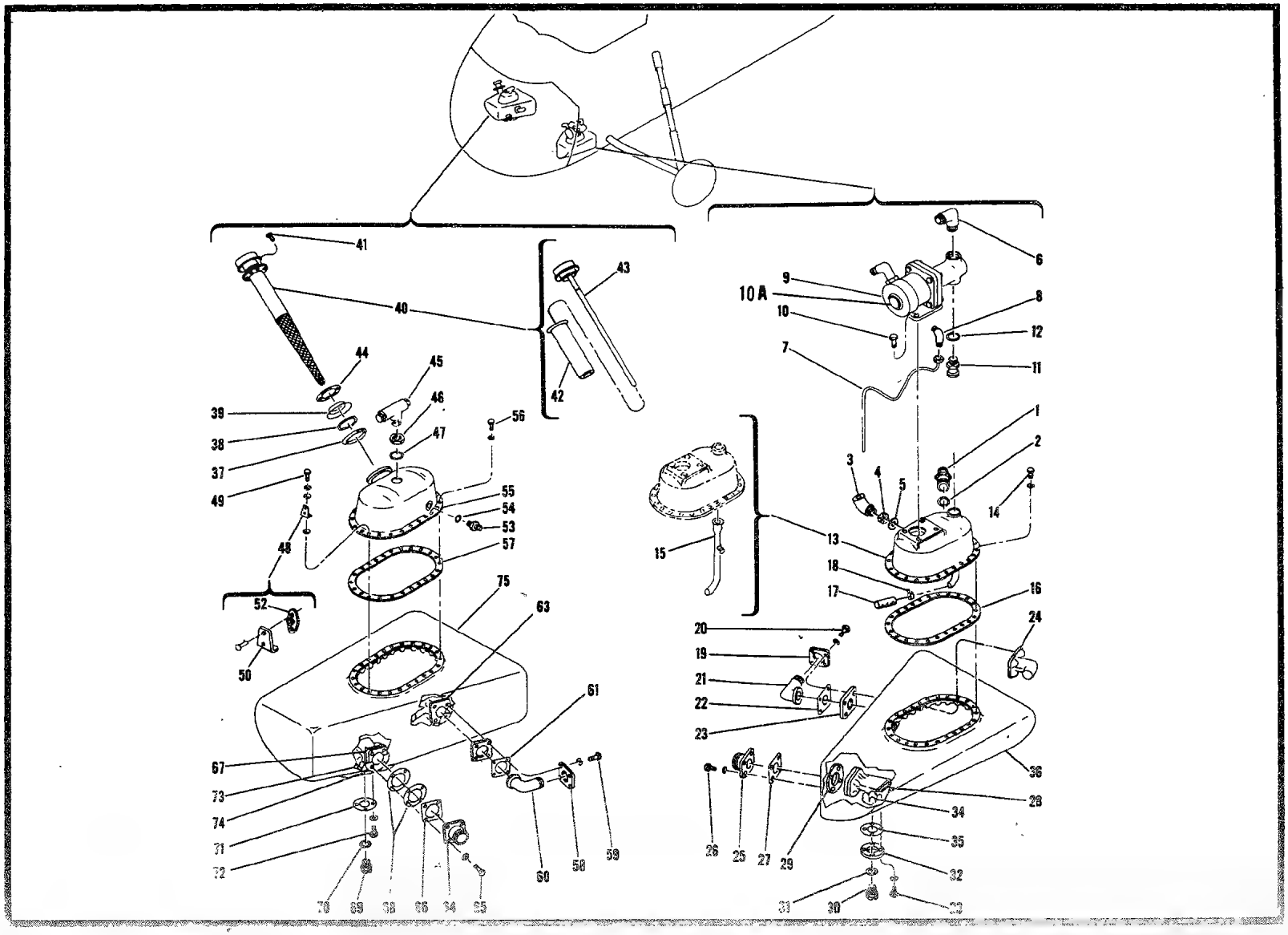

Figure 76. Oil Cell Installation

Figure 76A Not Used In TM55-1520-202-35P

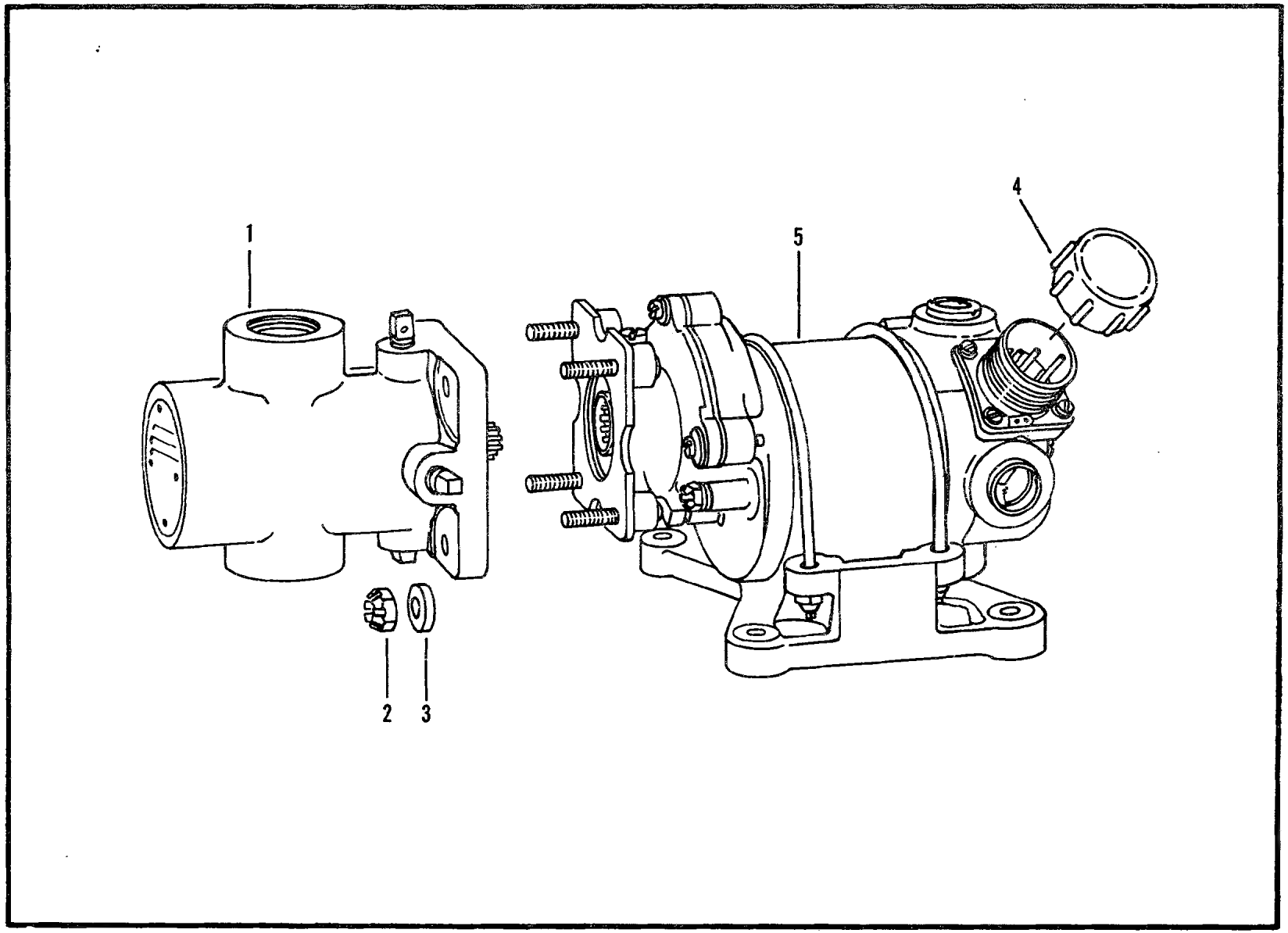

Figure 76B. Pump, Rotary, Power Driven (Sheet 1 of 2)

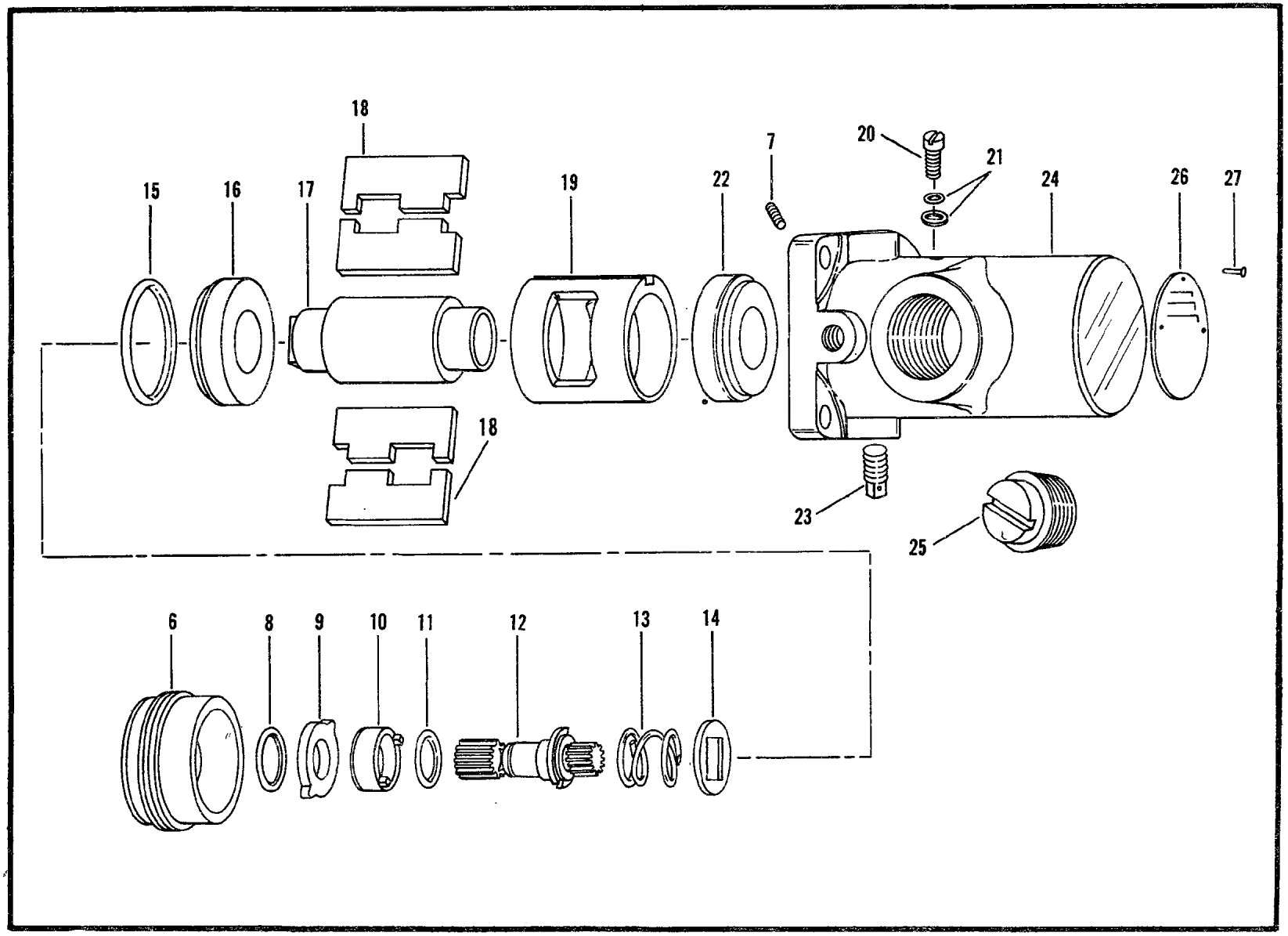

Figure 76B. Pump, Rotary, Power Driven (Pump Assembly)(Sheet 2 of 2)

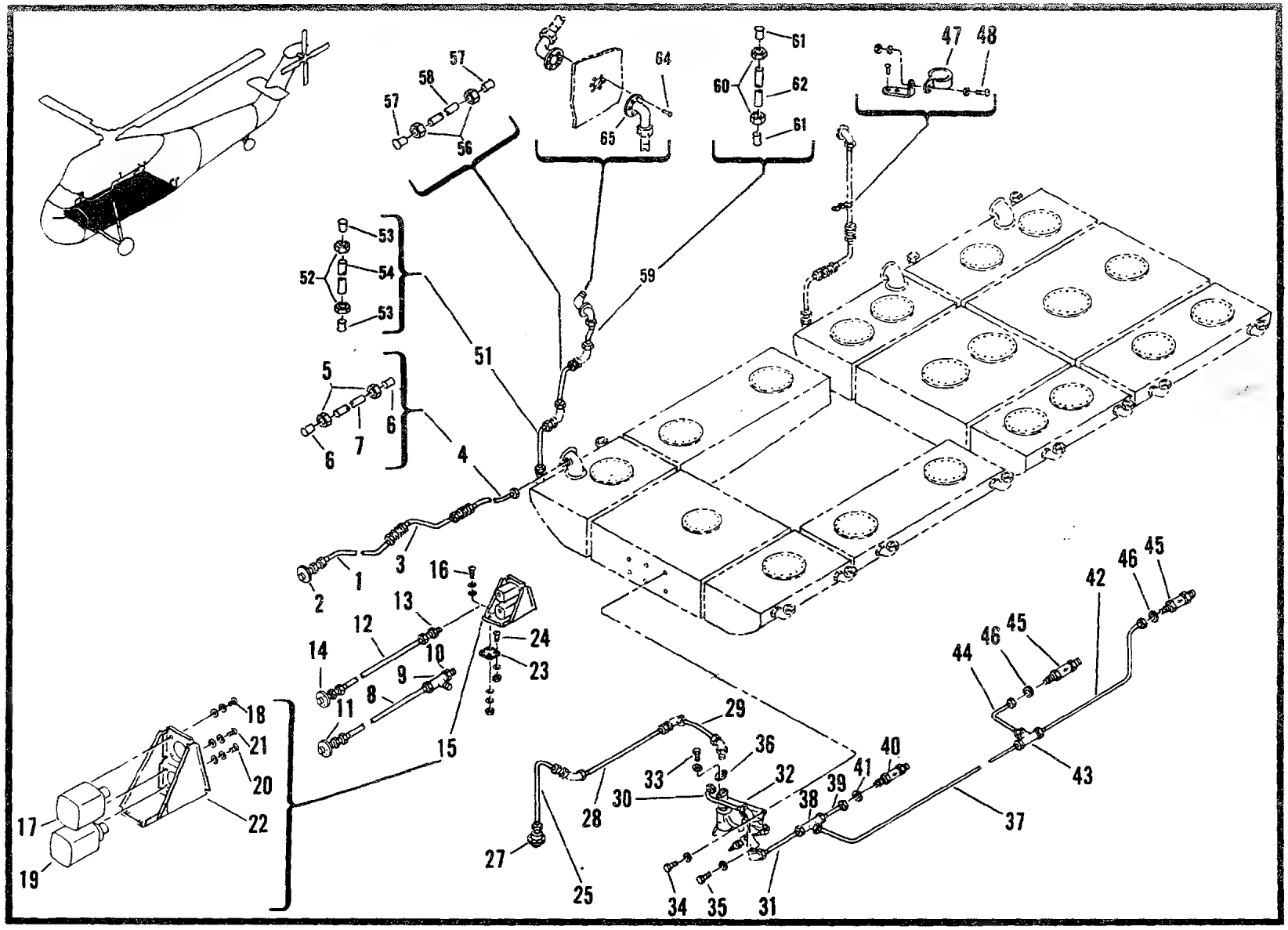

Figure 77. Fuel System Installation (Sheet 1 of 4)

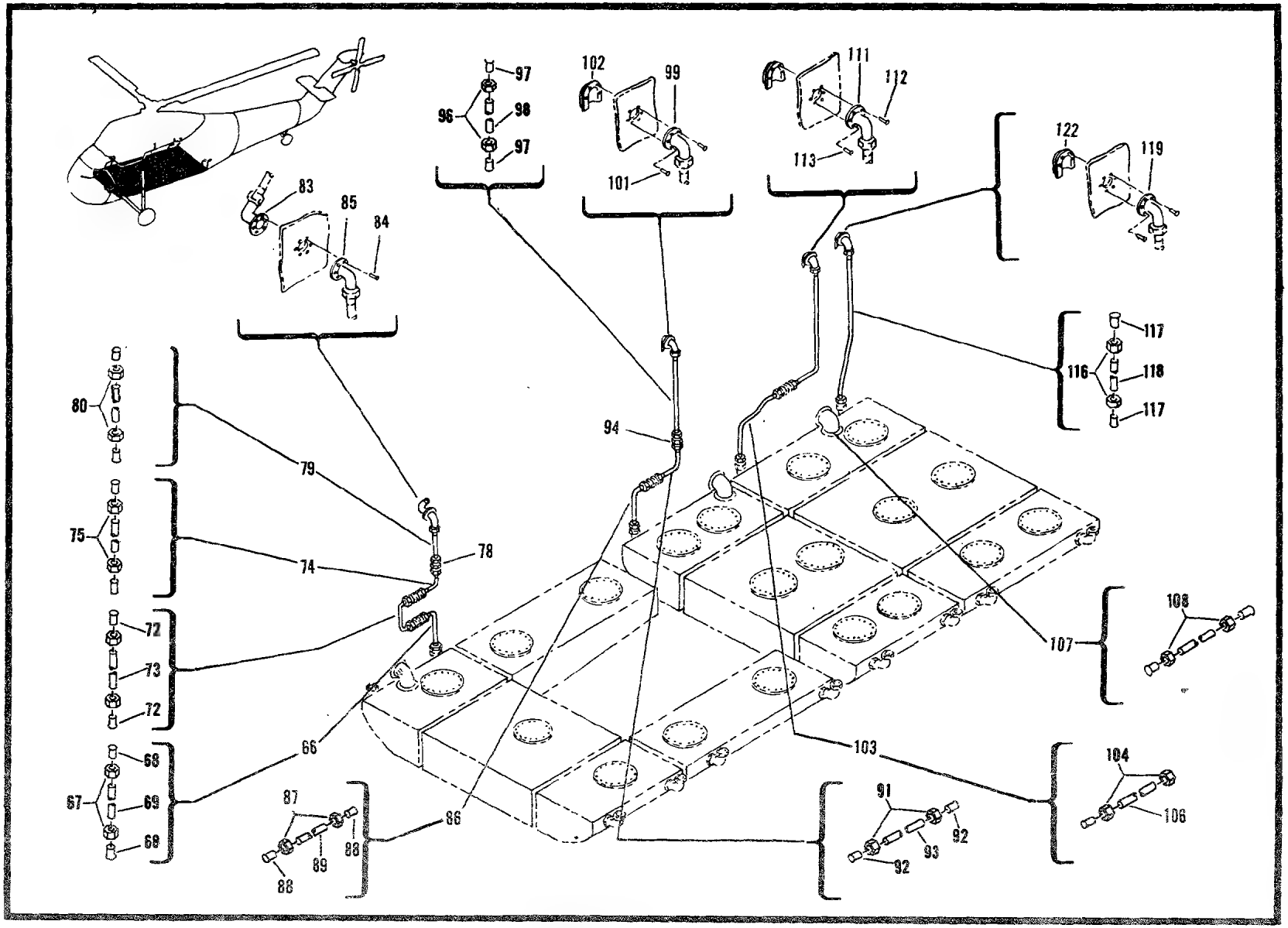

Figure 77. Fuel System Installation (Sheet 2 of 4)

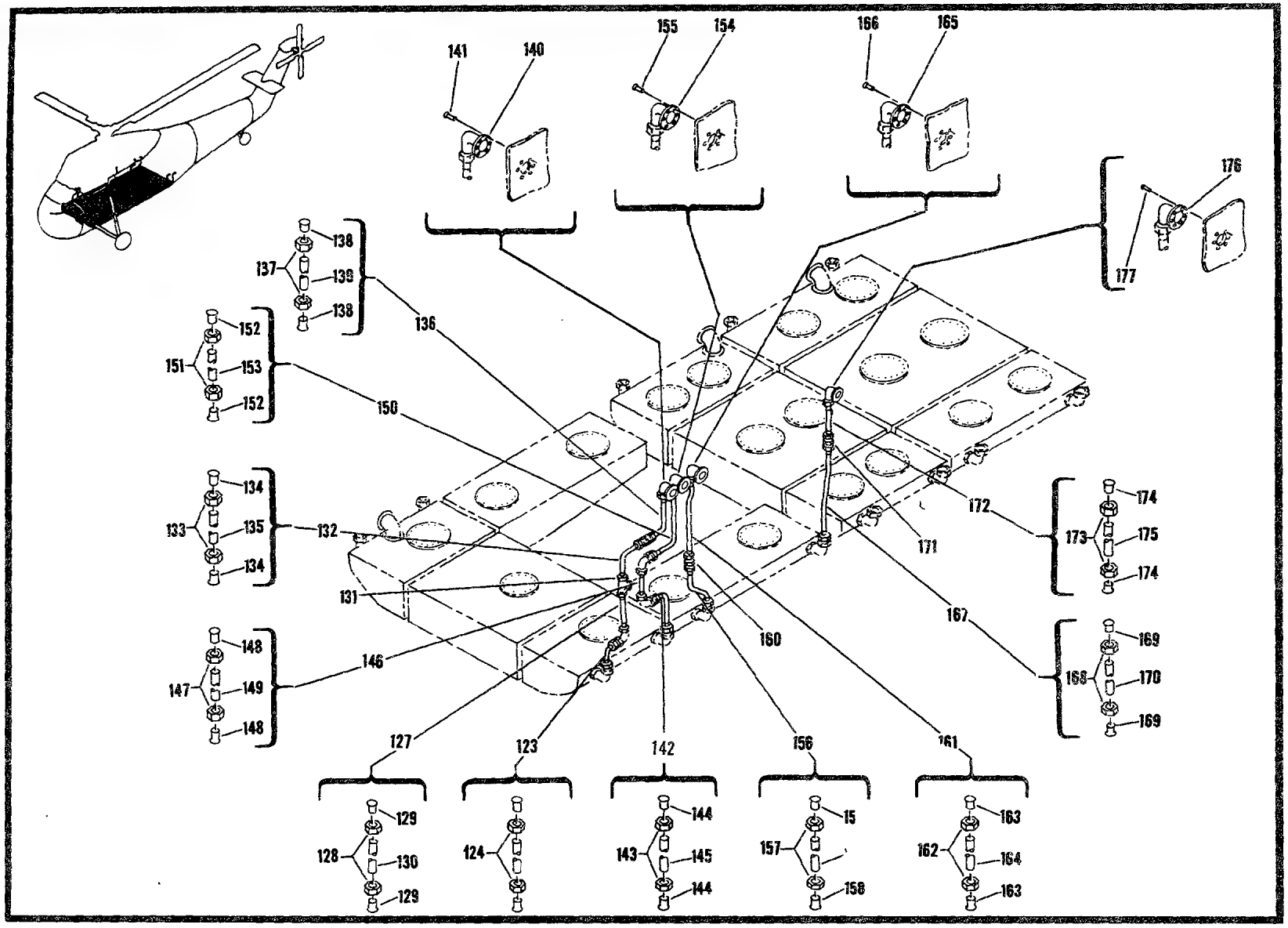

Figure 77. Fuel System Installation (Sheet 3 of 4)

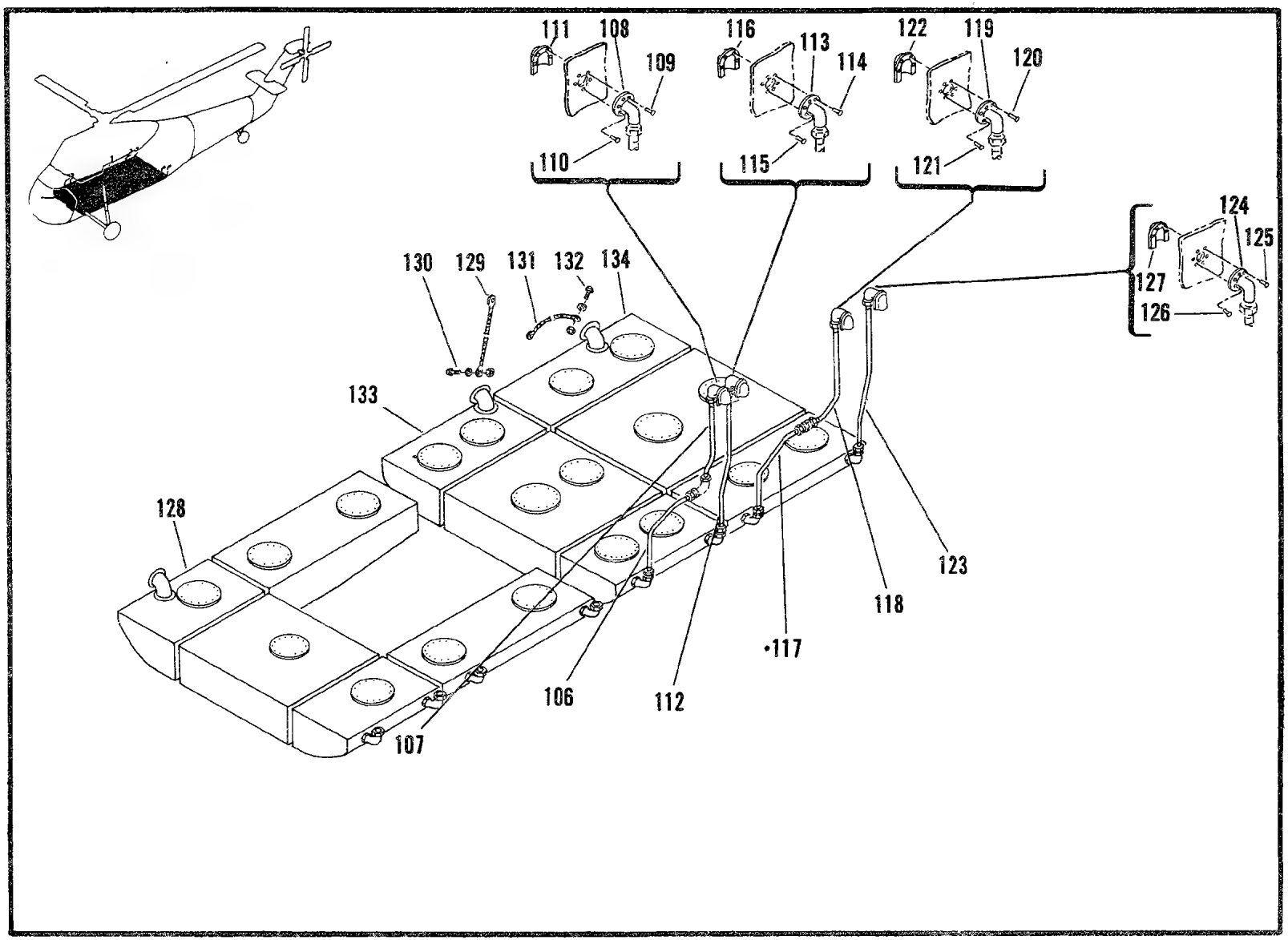

Figure 77. Fuel System Installation (Sheet 4 of 4)

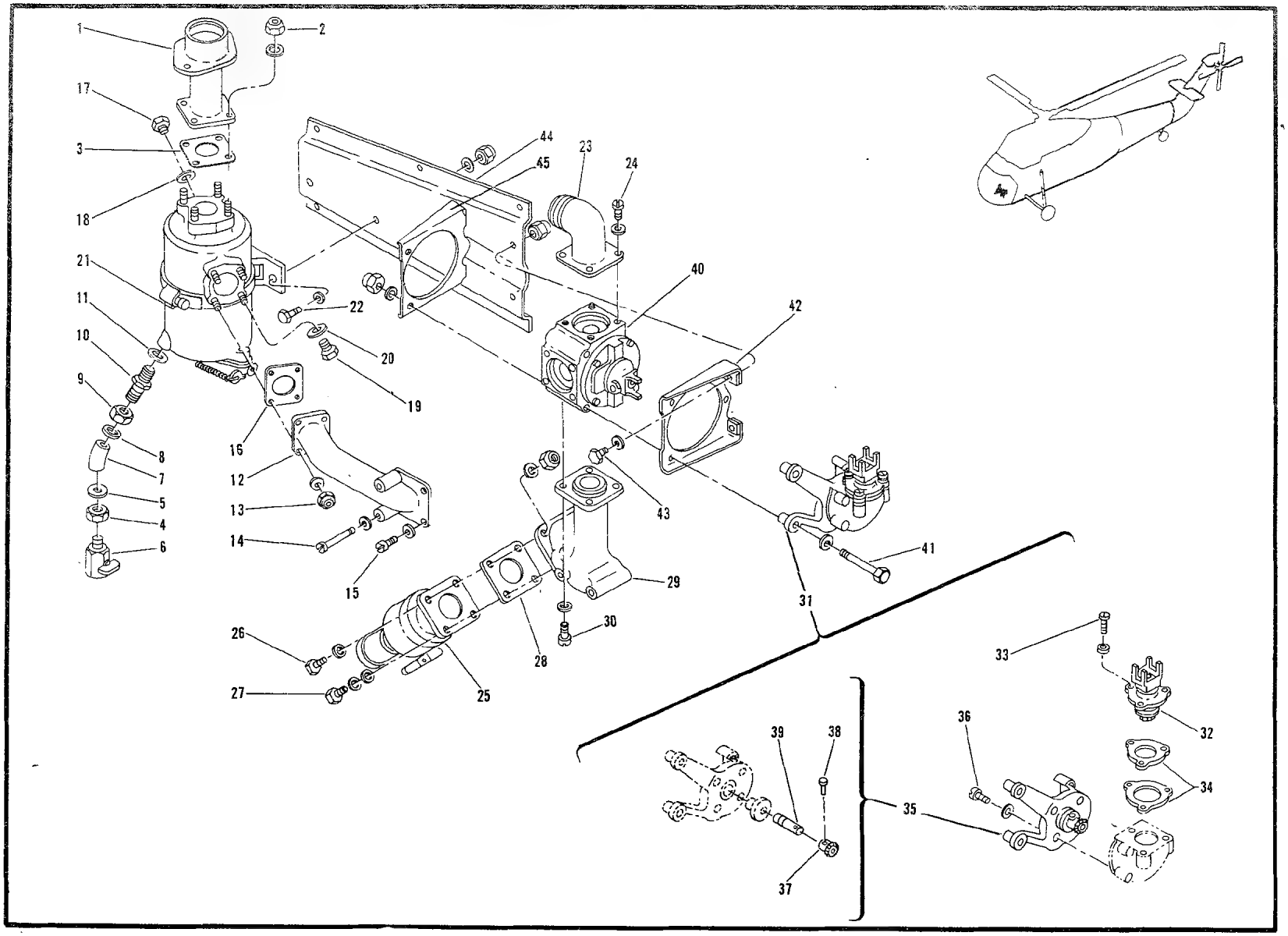

Figure 78. Valve and Strainer Assembly Selector

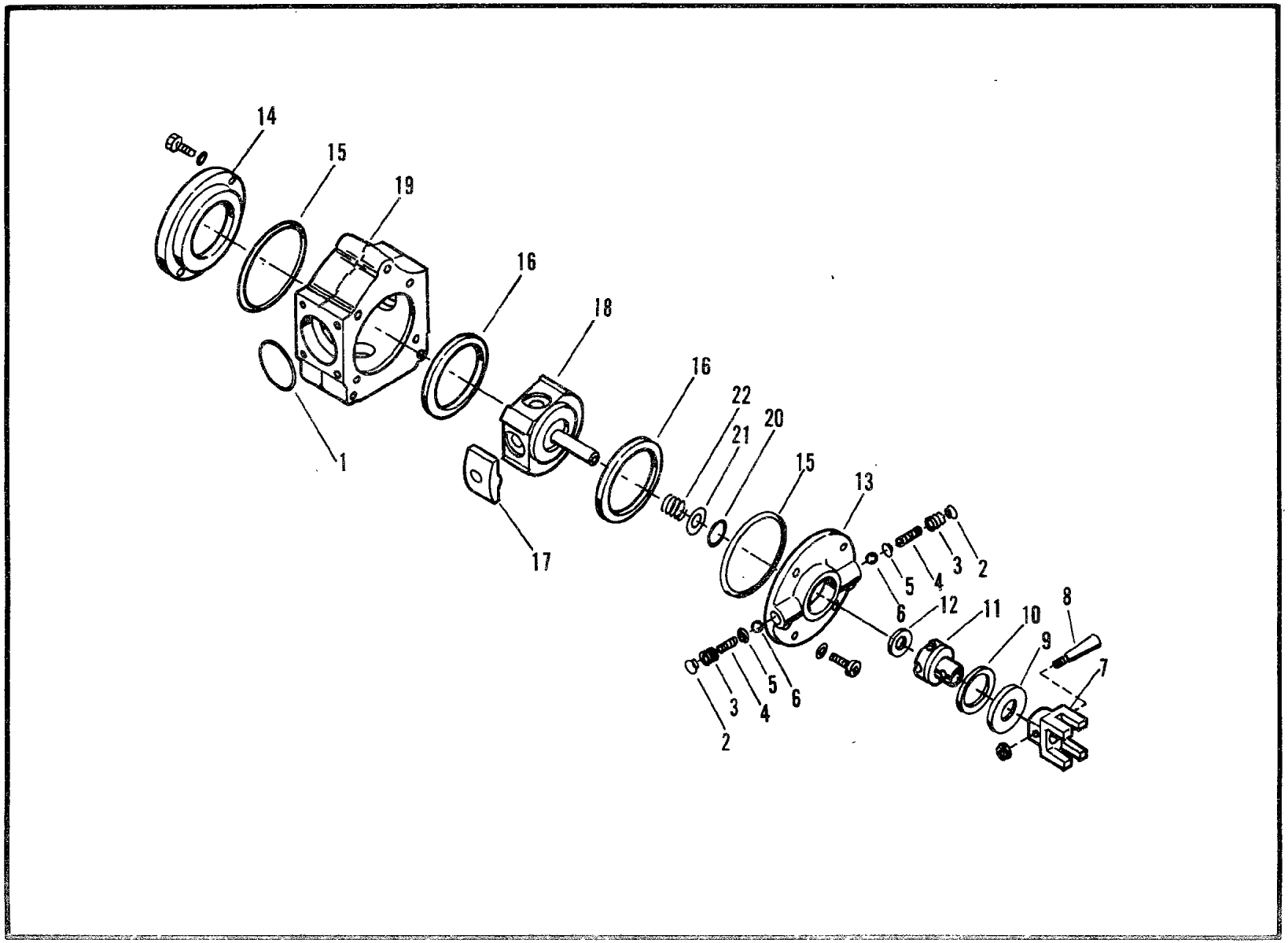

Figure 78A. Valve, Plug-Fuel

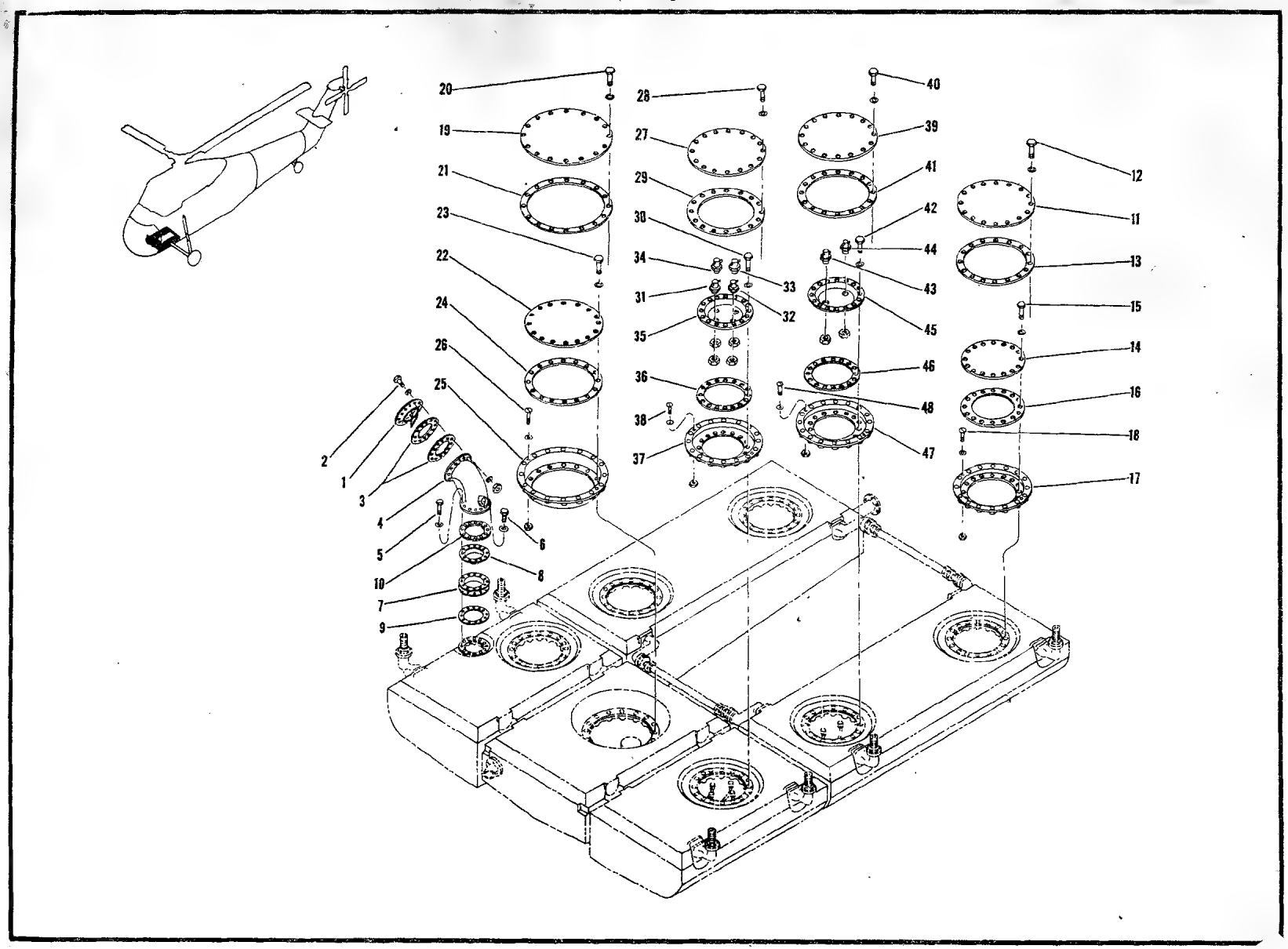

Figure 79. Forward Self-Sealing Fuel Cell Installation (Sheet 1 of 3)

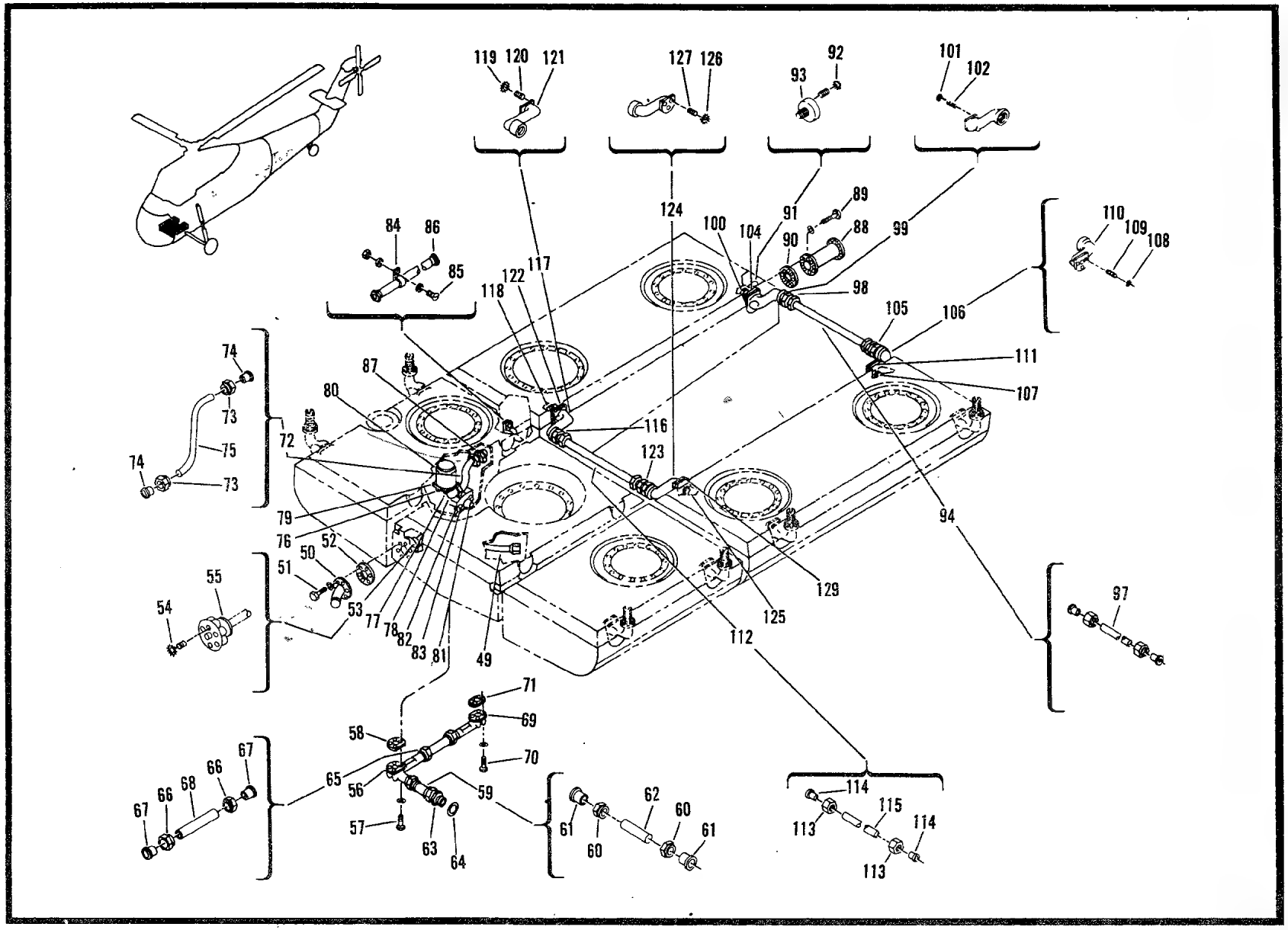

649 Figure 79. Forward Self-Sealing Fuel Cell Installation (Sheet 2 of 3)

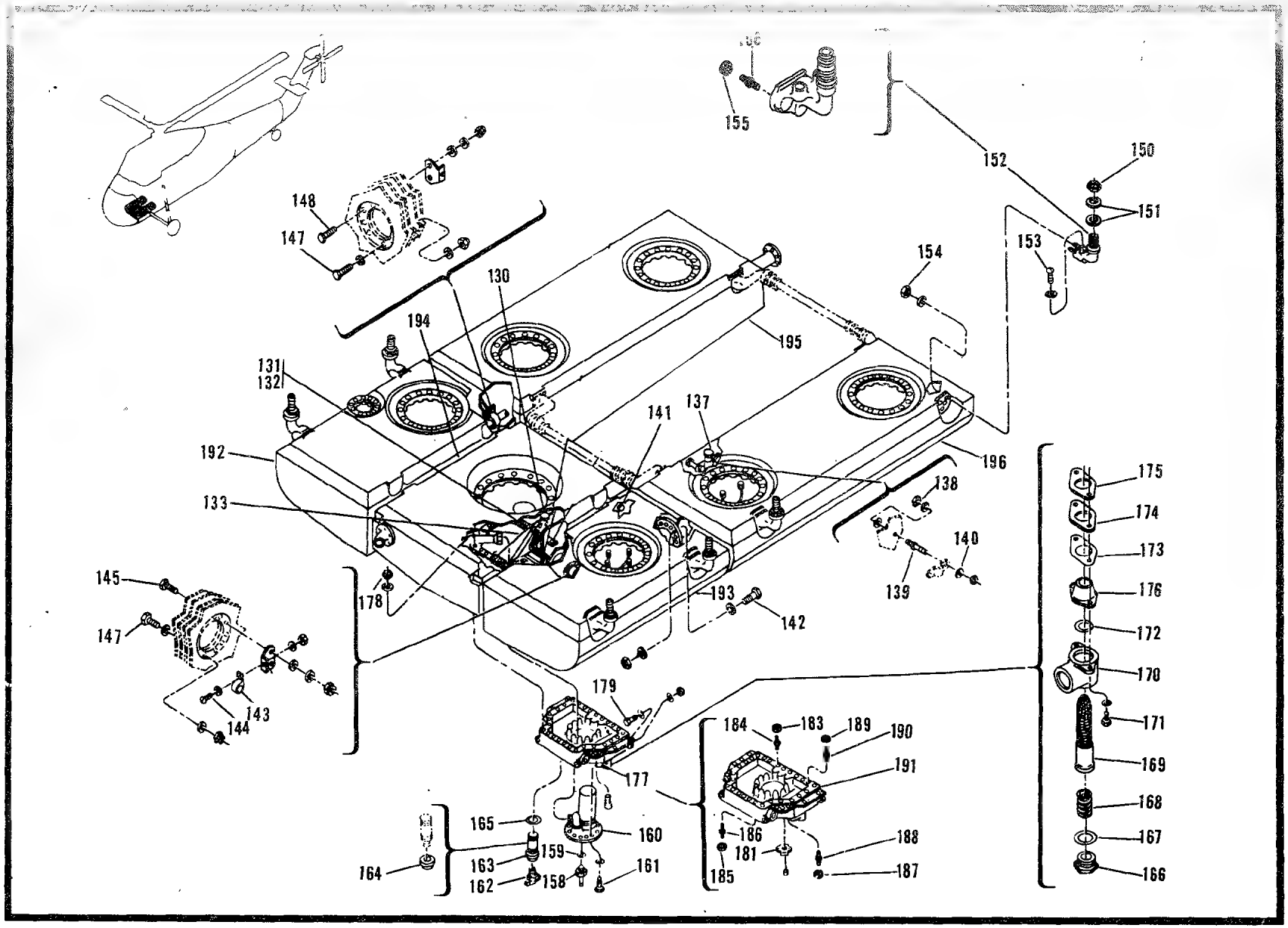

650

Figure 79. Forward Self-Sealing Fuel Cell Installation (Sheet 3 of 3)

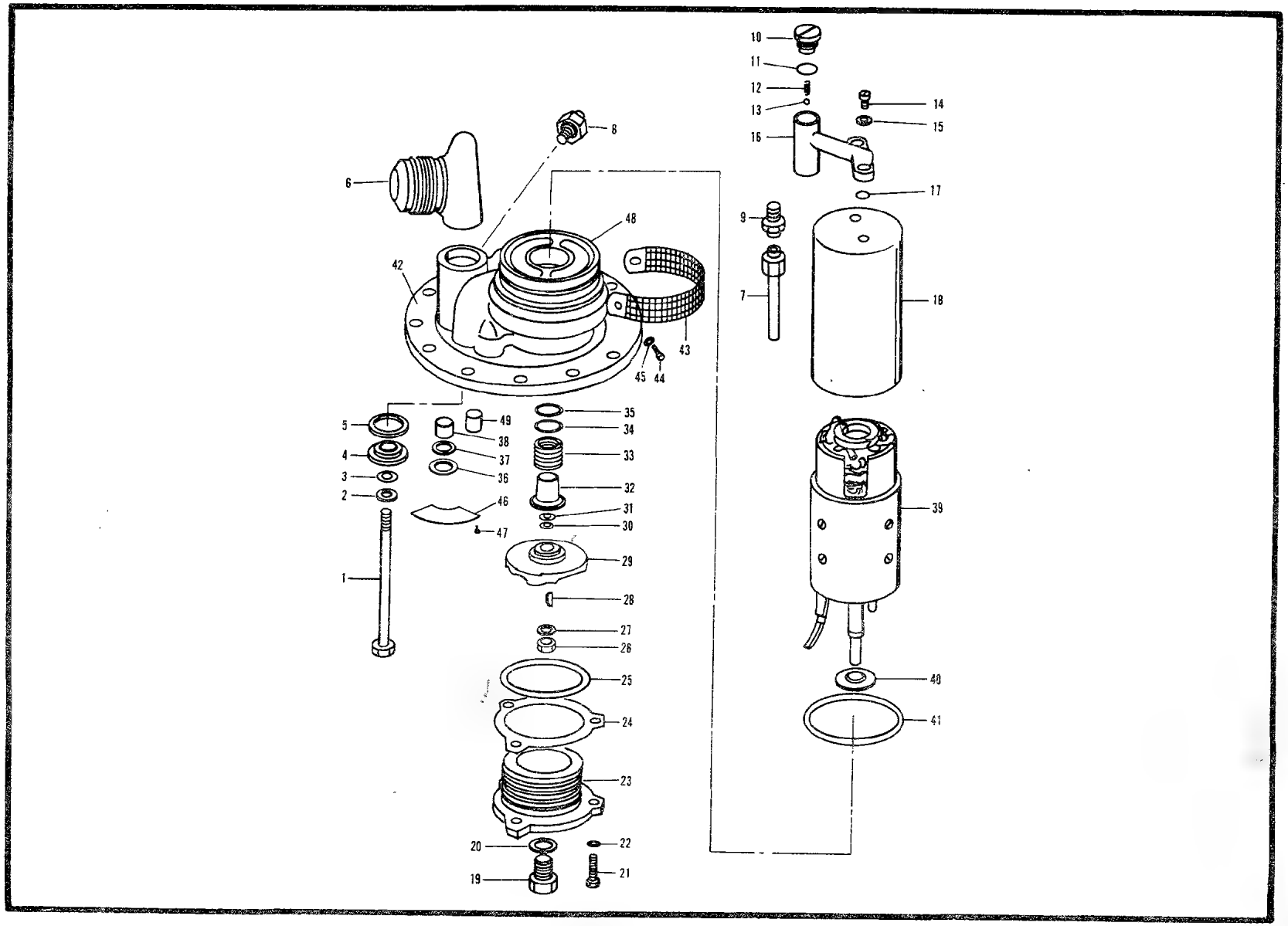

Figure 79A. Pump, Fuel Booster (Sheet 1 of 2)

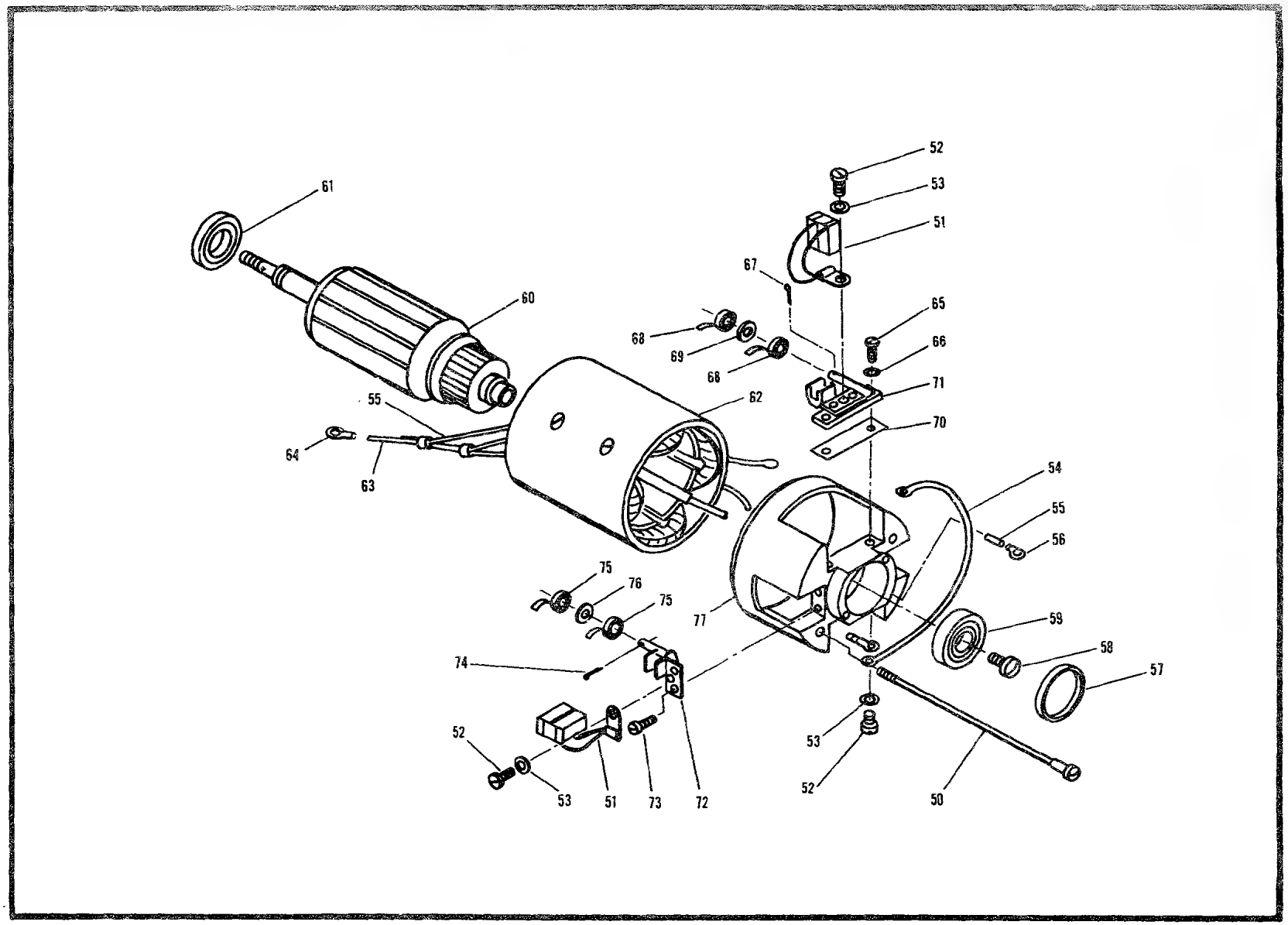

Figure 79A. Pump, Fuel Booster (Motor Assembly) (Sheet 2 of 2)

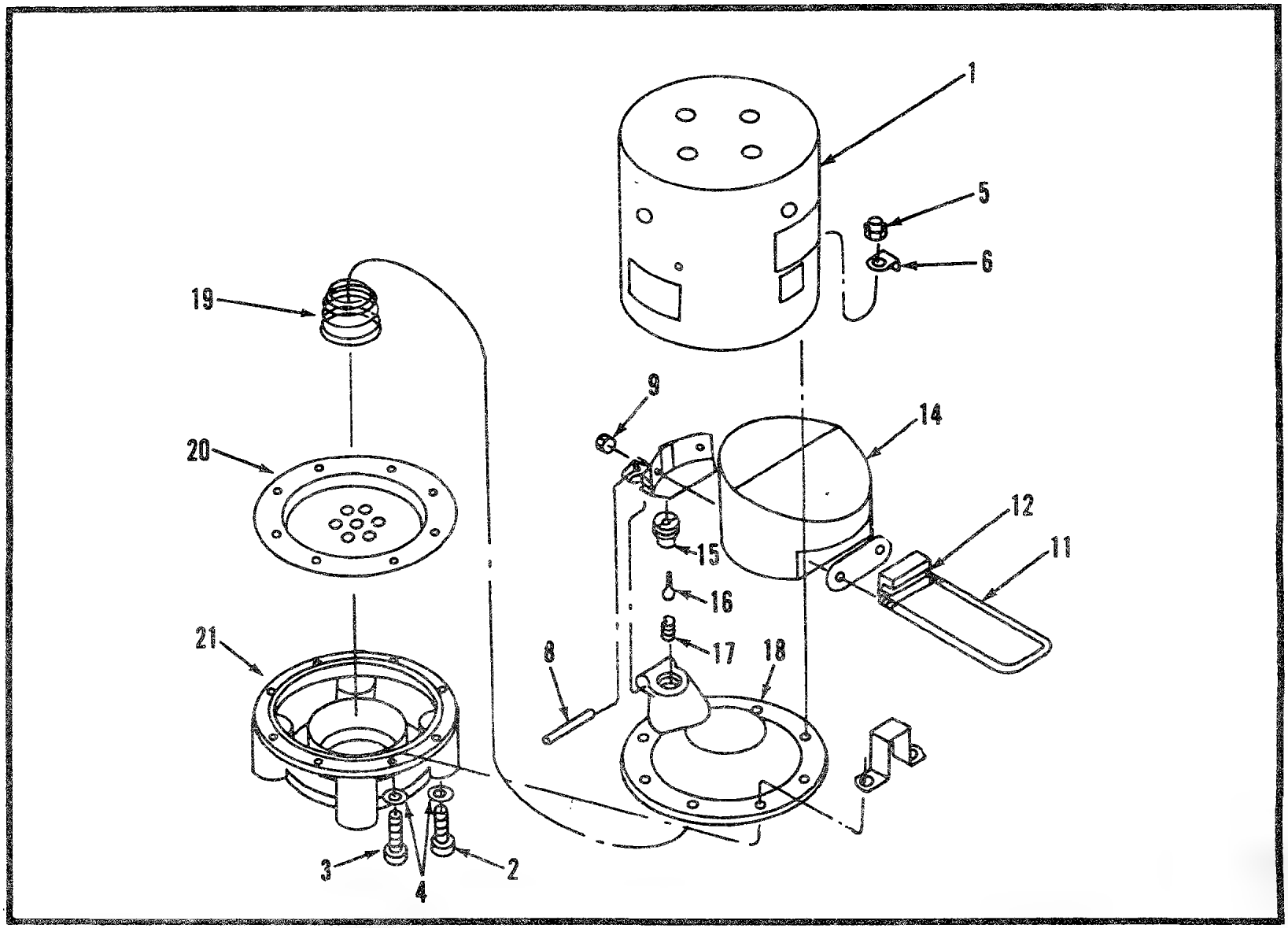

Figure 79B. Float Valve Assembly, Fuel

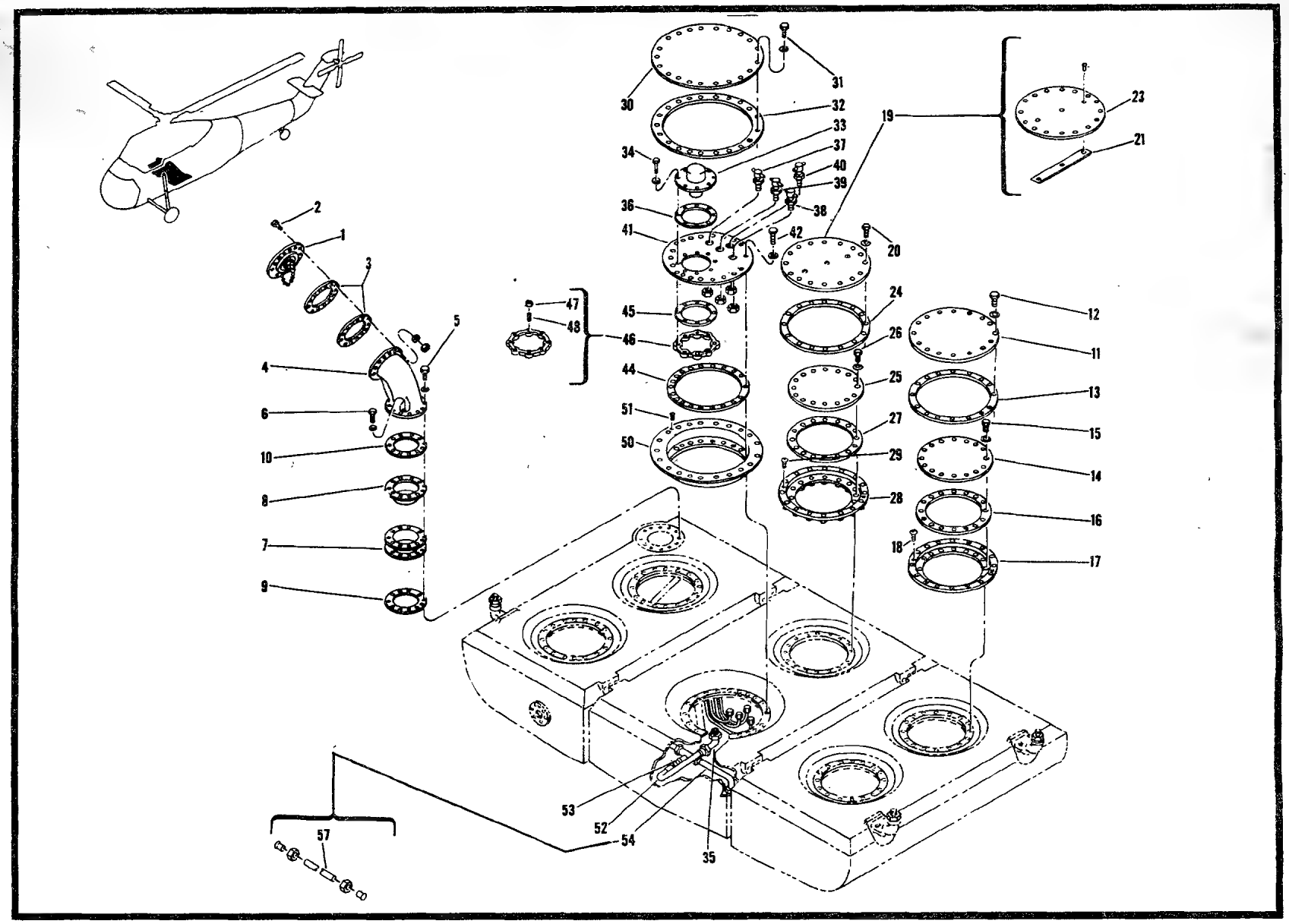

Figure 80. Center Pliocel Fuel Cell Installation (Sheet 1 of 2)

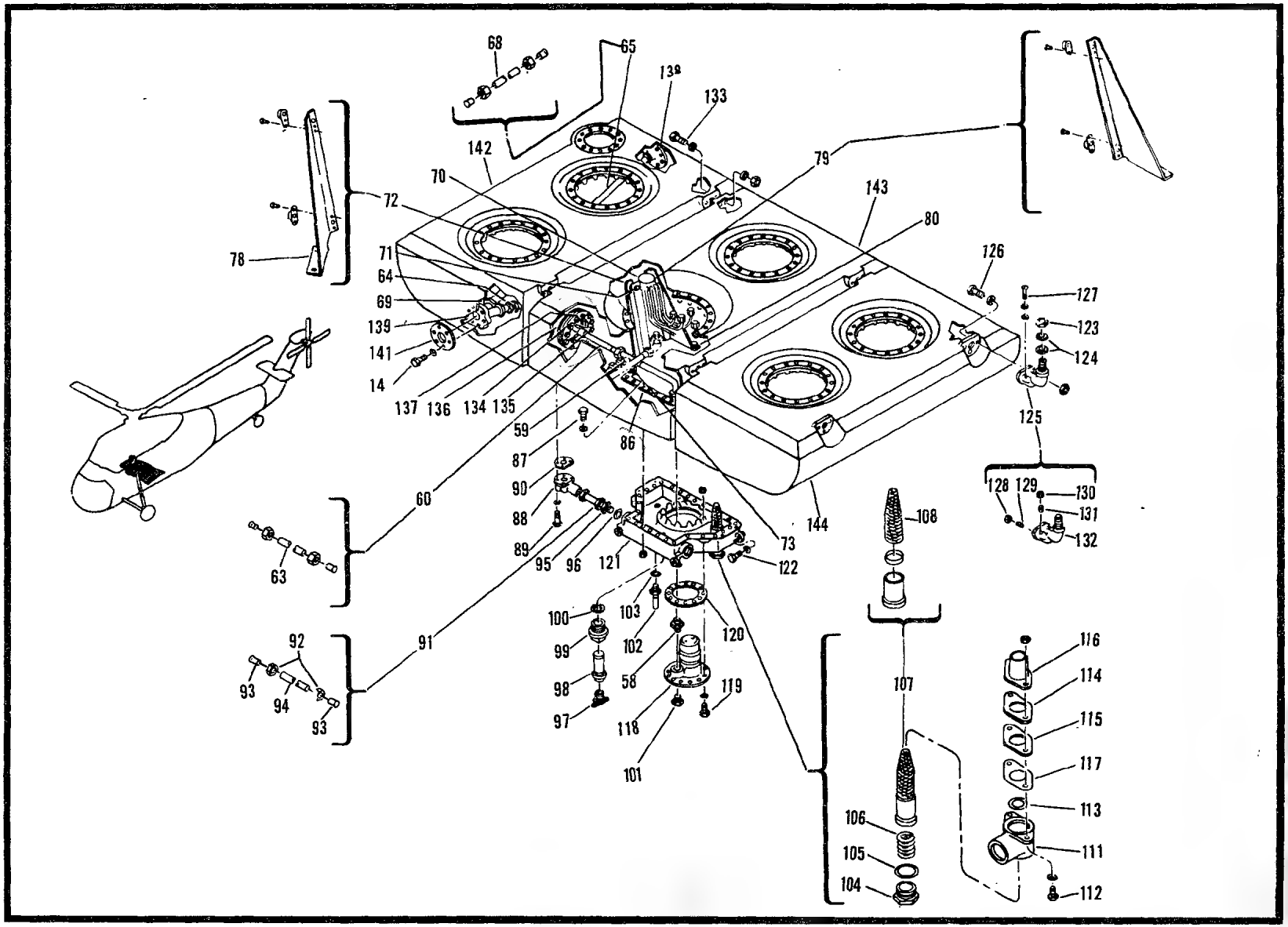

Figure 80. Center Pliocel Fuel Cell Installation (Sheet 2 of 2)

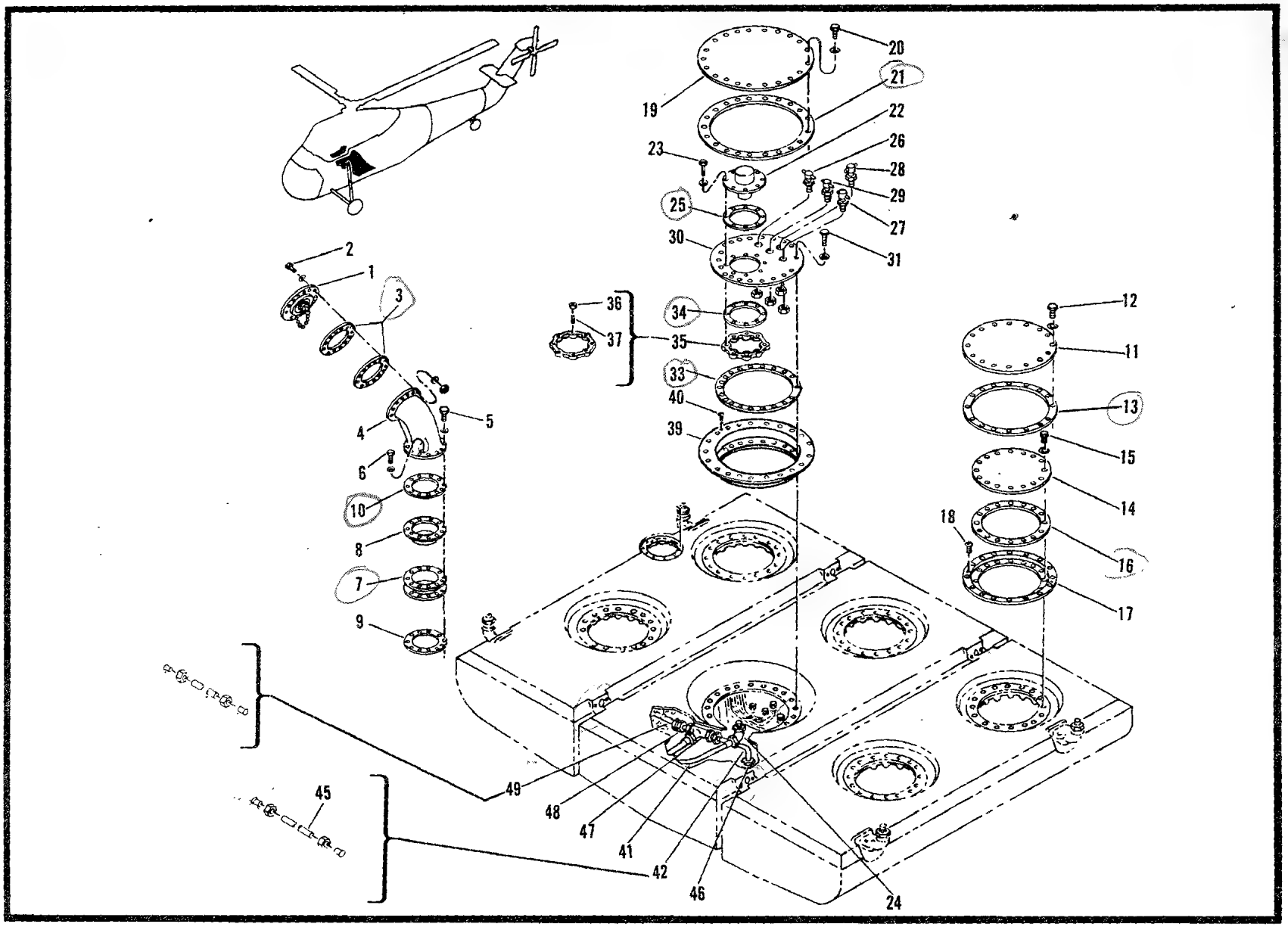

Figure 81. Aft Pliocel Fuel Cell Installation (Sheet 1 of 2)

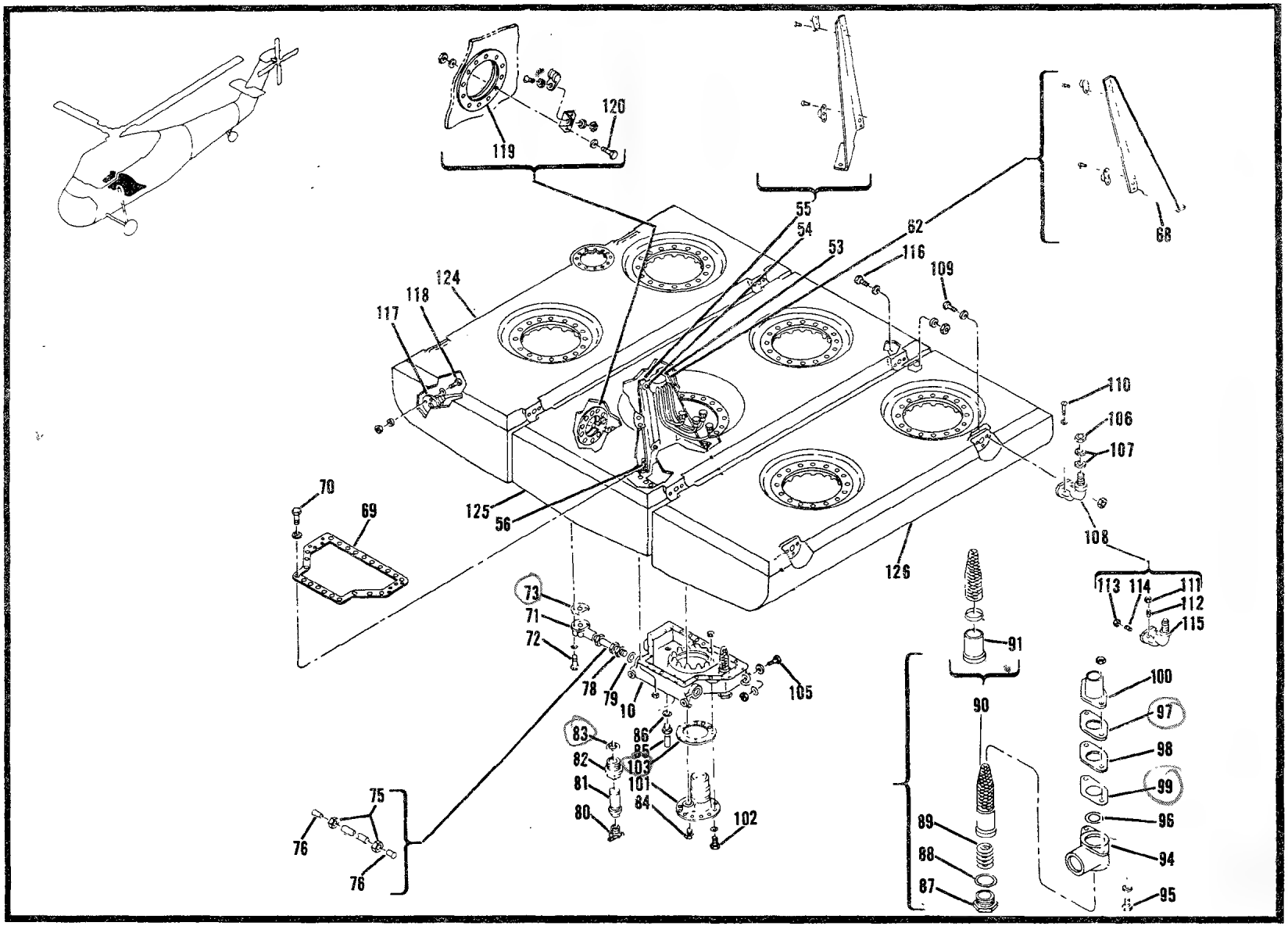

Figure 81. Aft Pliocel Fuel Cell Installation (Sheet 2 of 2)

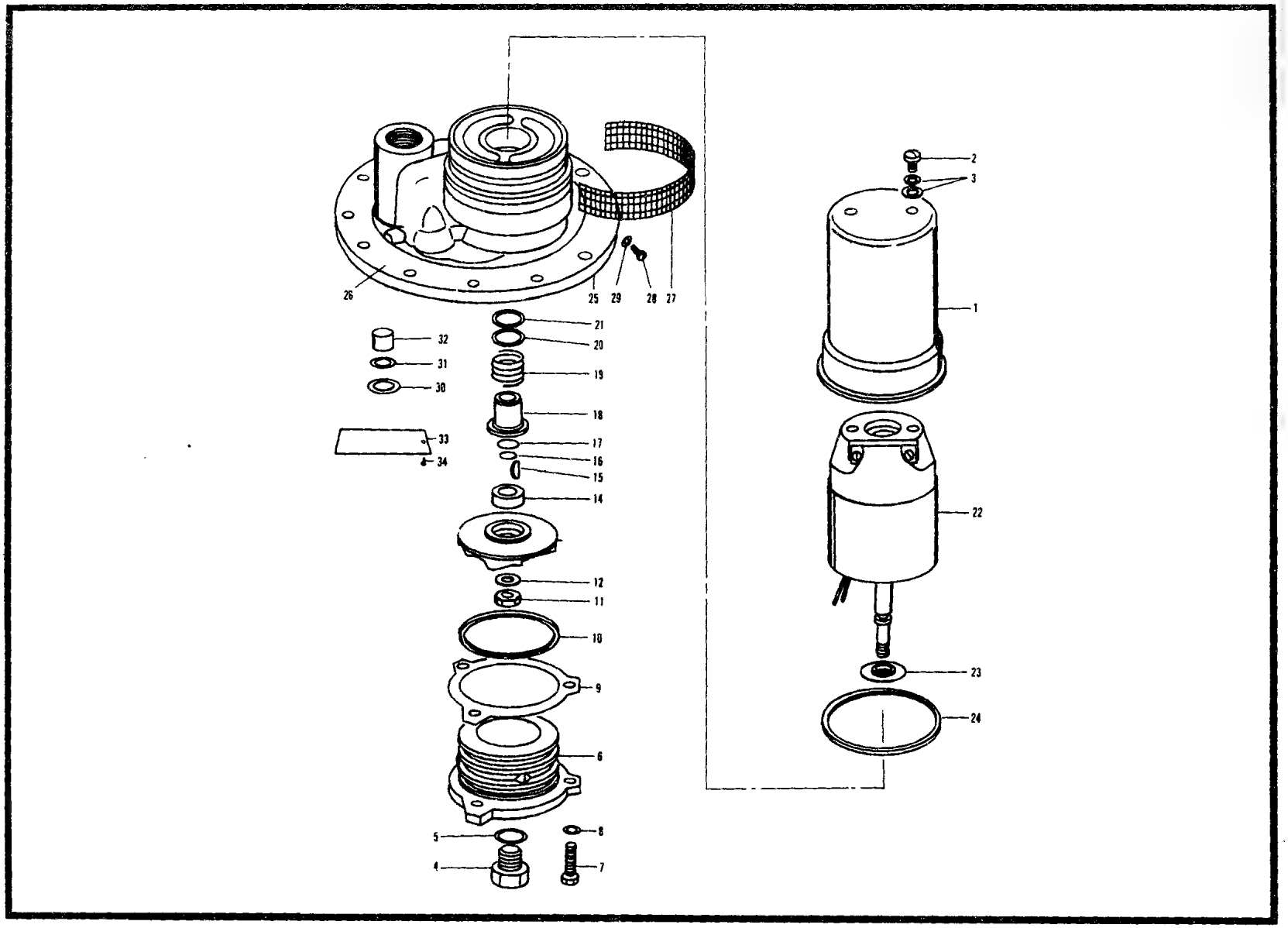

Figure 81A. Pump, Rotary, Power Driven (Sheet 1 of 2)

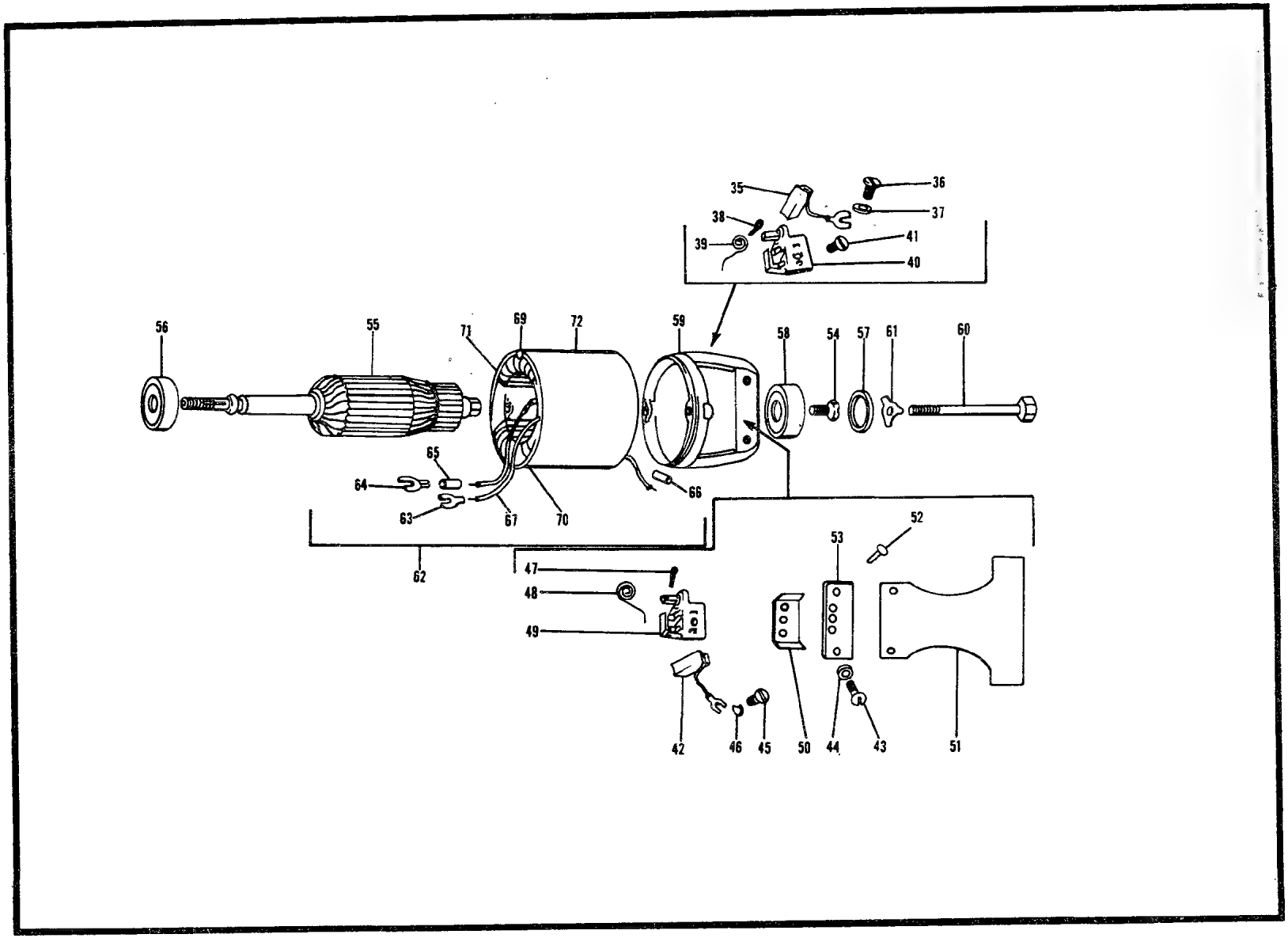

Figure 81A. Pump, Rotary, Power Driven (Motor Assembly) (Sheet 2 of 2)

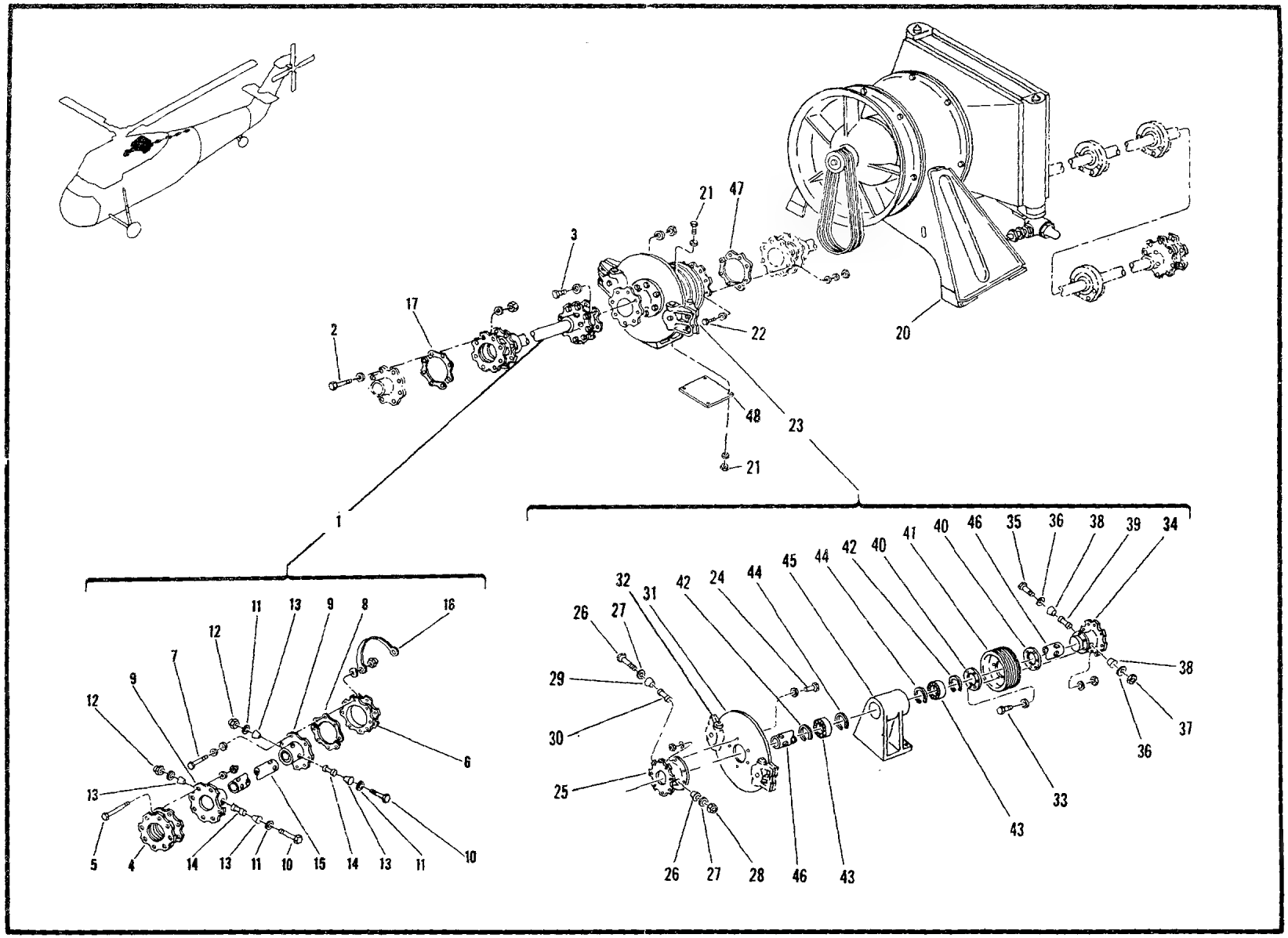

Figure 82. Forward Transmission Installation (Sheet 1 of 2)

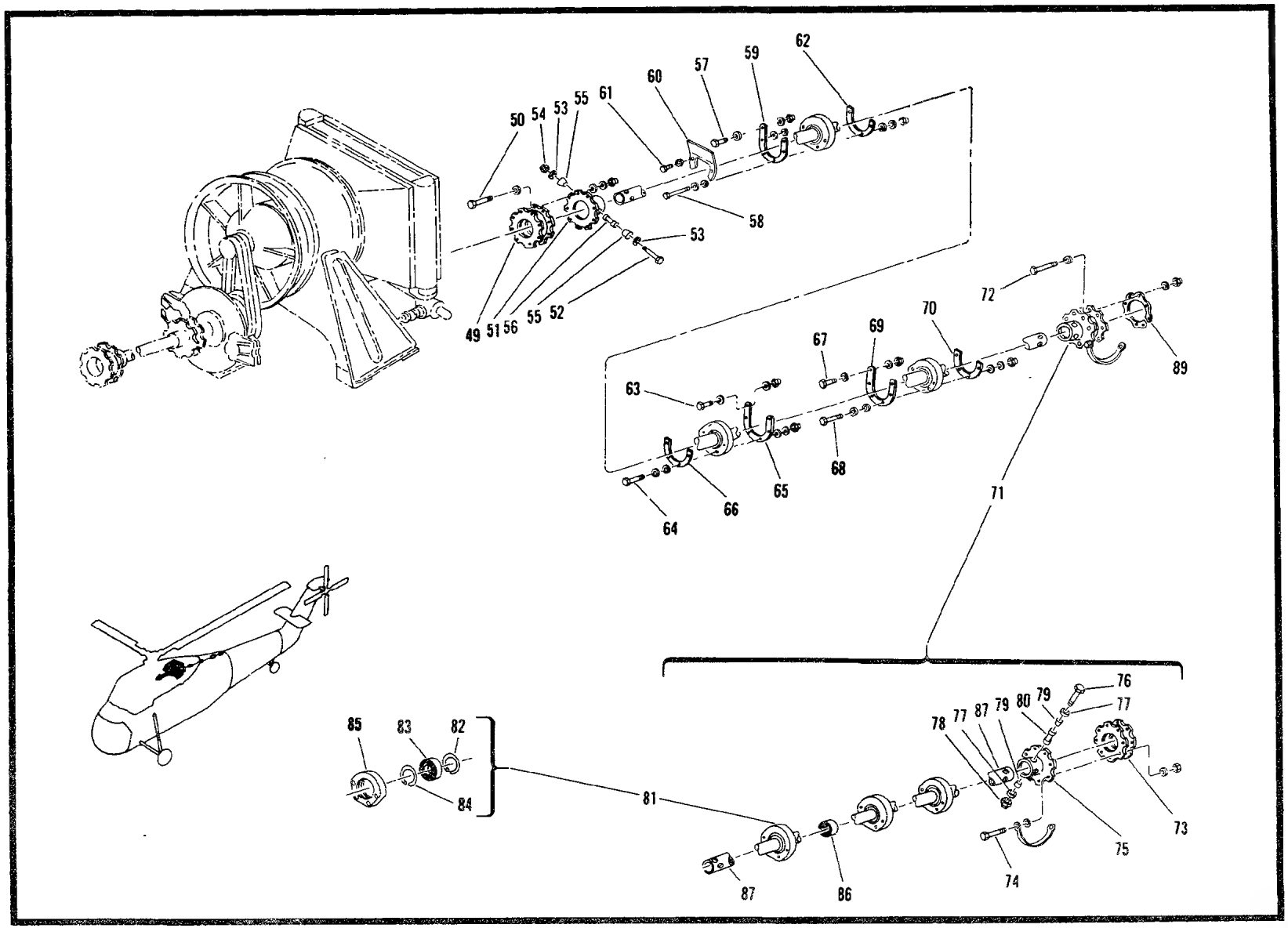

Figure 82. Forward Transmission Installation (Sheet 2 of 2)

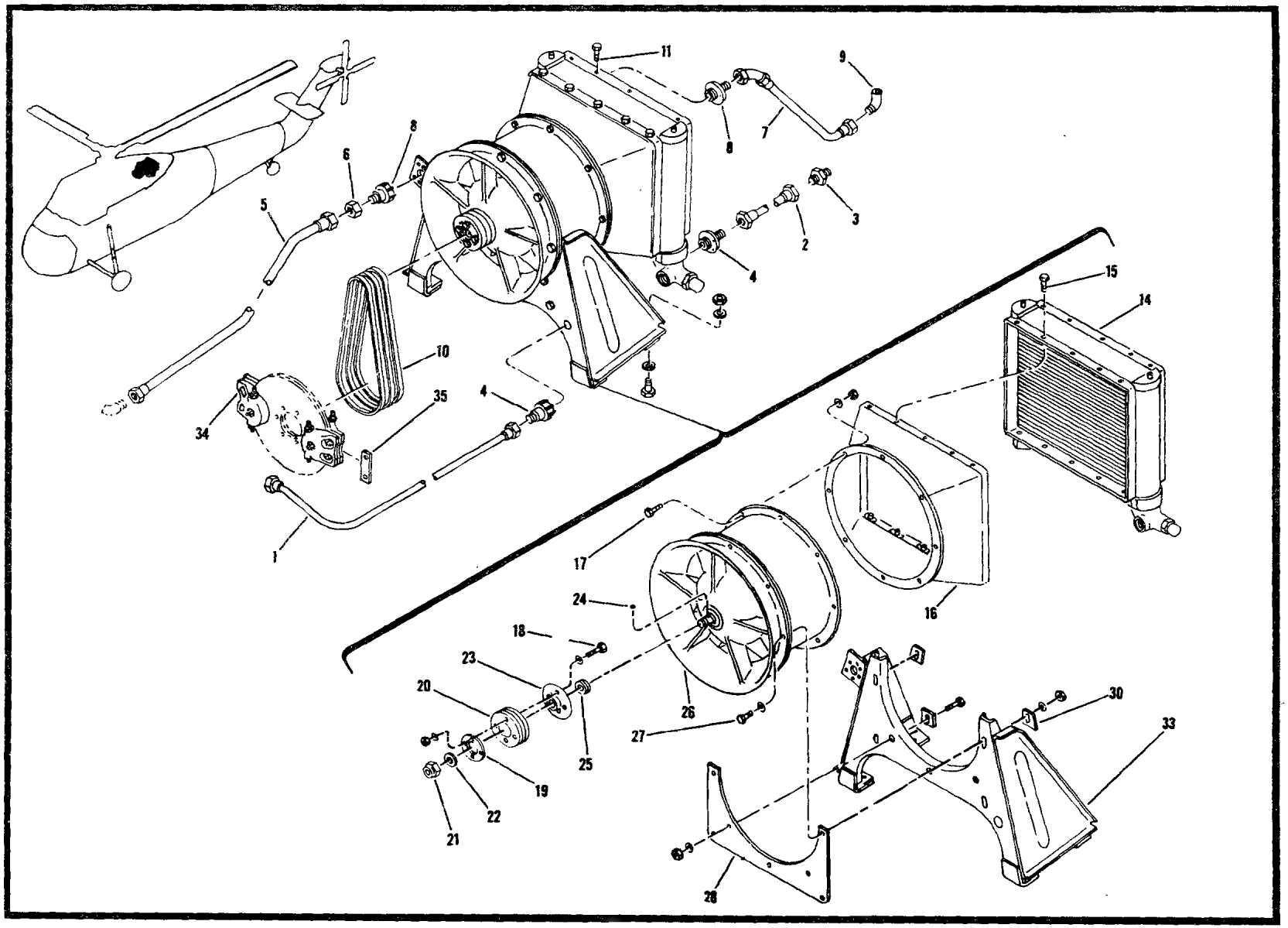

Figure 83. Oil Cooler and Rotor Brake Installation (USBL EFF 53-4475 thru 54-891)

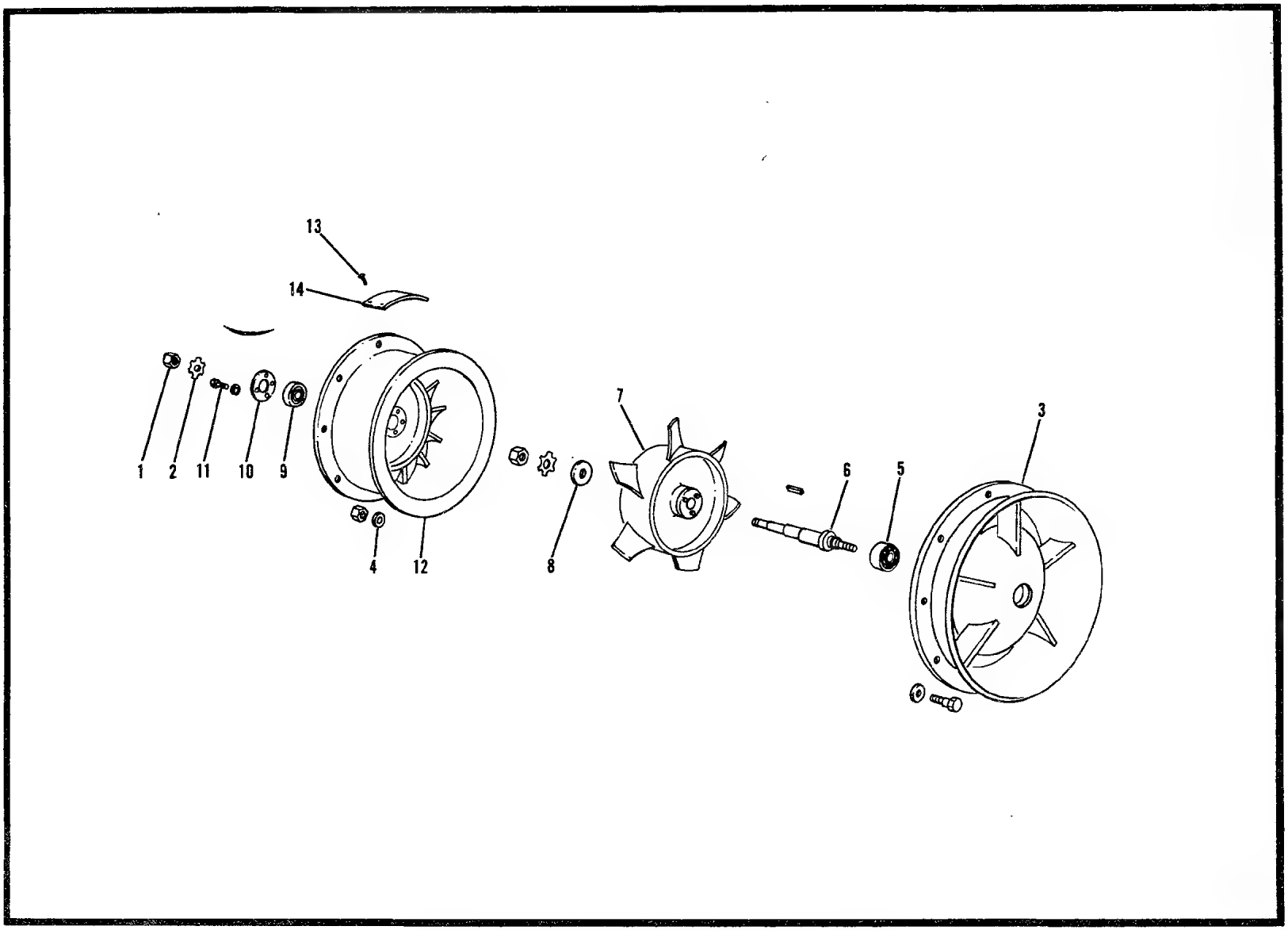

Figure 83A. Fan Assembly, Axivane Aircraft

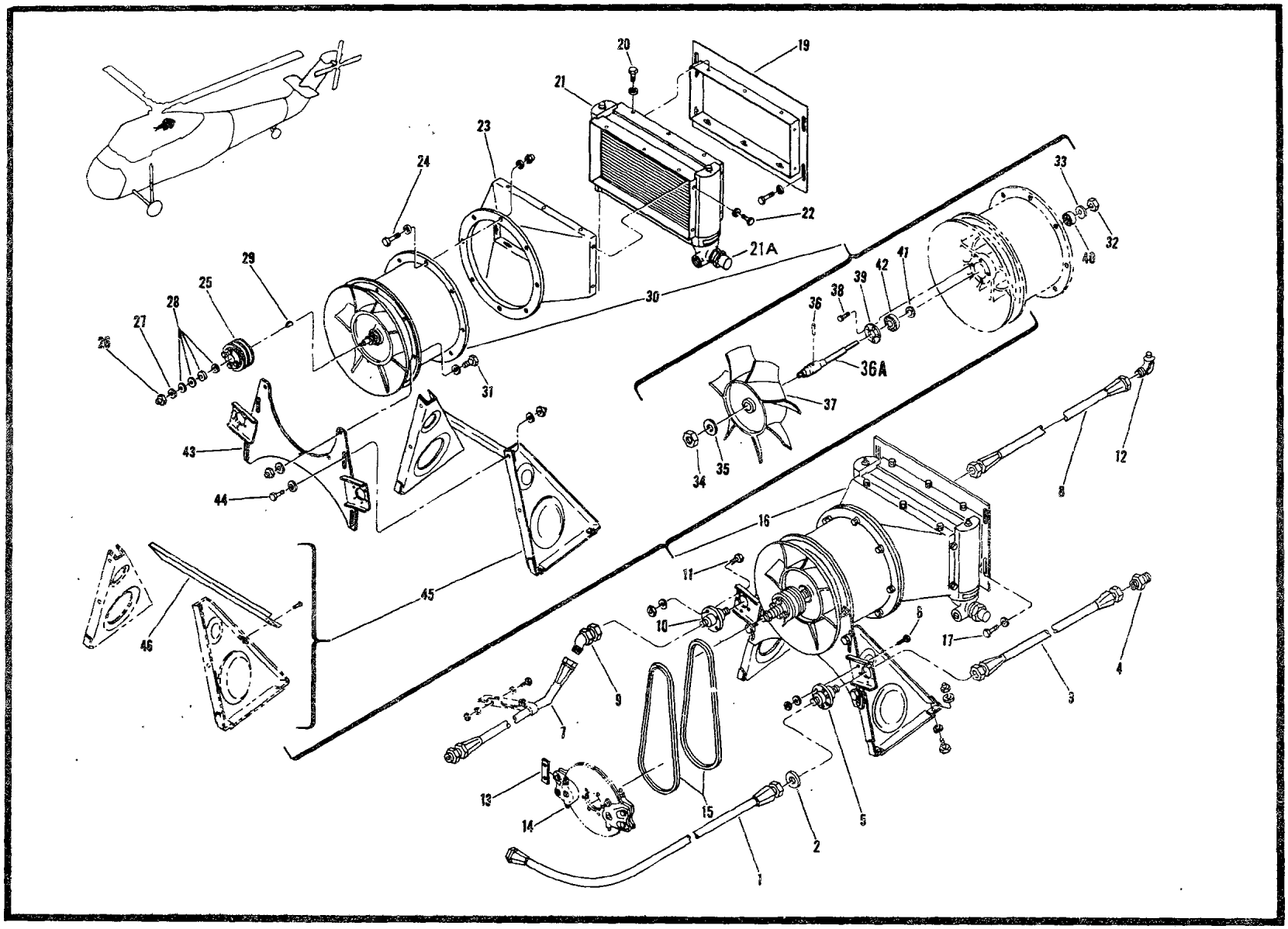

Figure 84. Oil Cooler and Blower Installation (USBL EFF 54-892 and Subsequent)

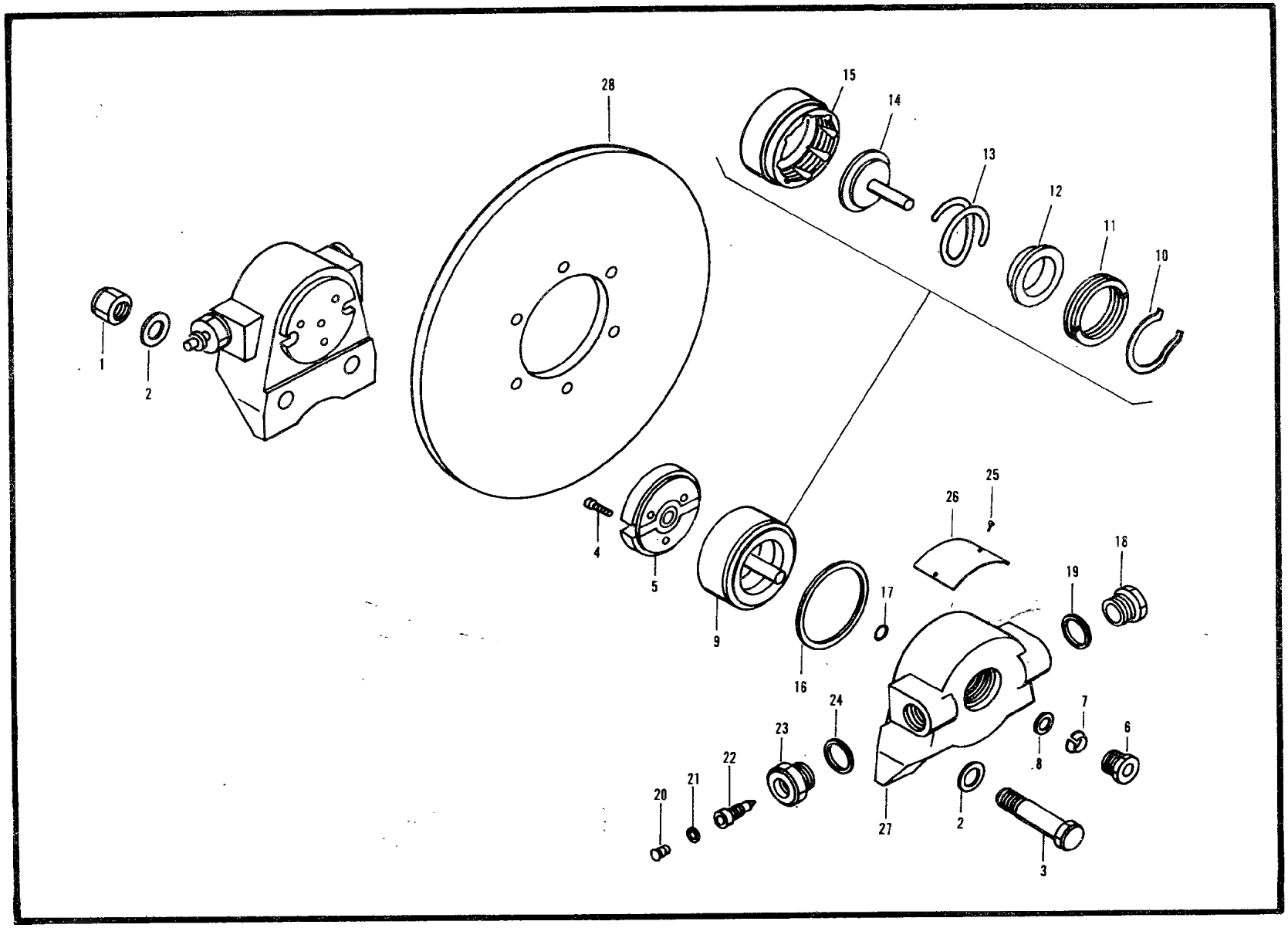

Figure 84A. Brake Assembly, Hydraulic Unit

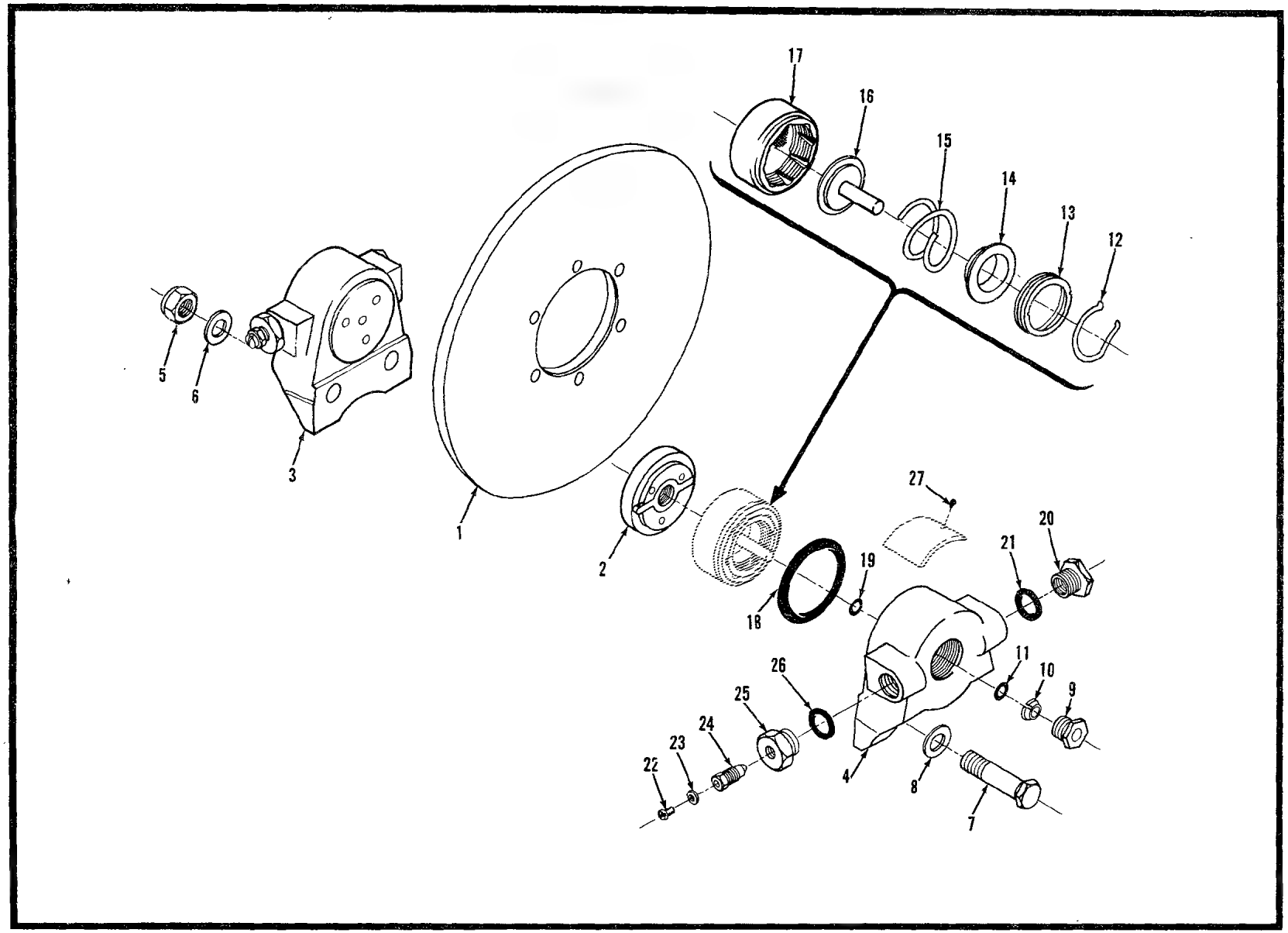

Figure 84B. Brake Assembly, Hydraulic Unit

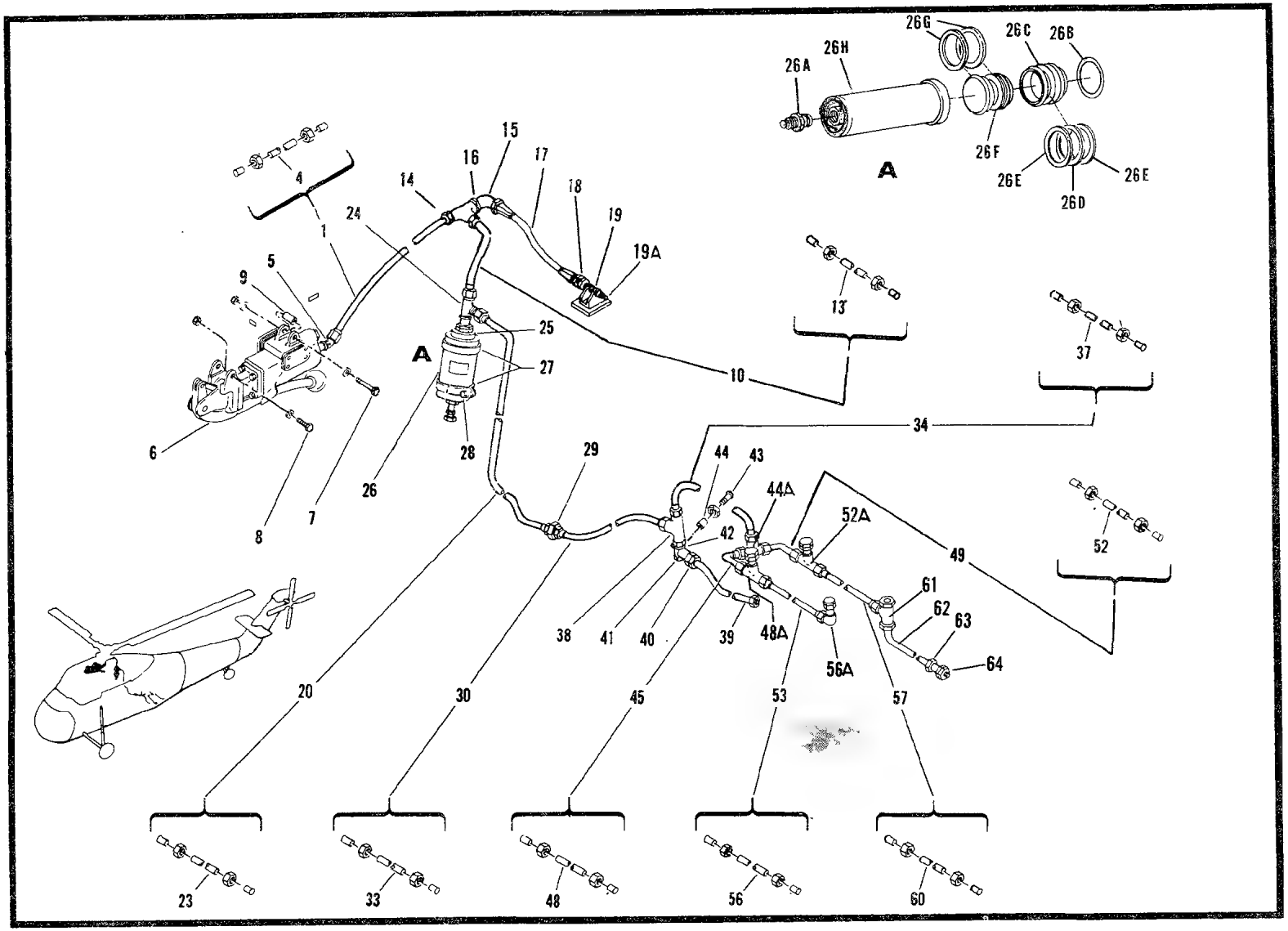

Figure 85.- Rotor Brake Hydraulic Lines Installation

Figure 85A Not Used In TM55-1520-202-35P

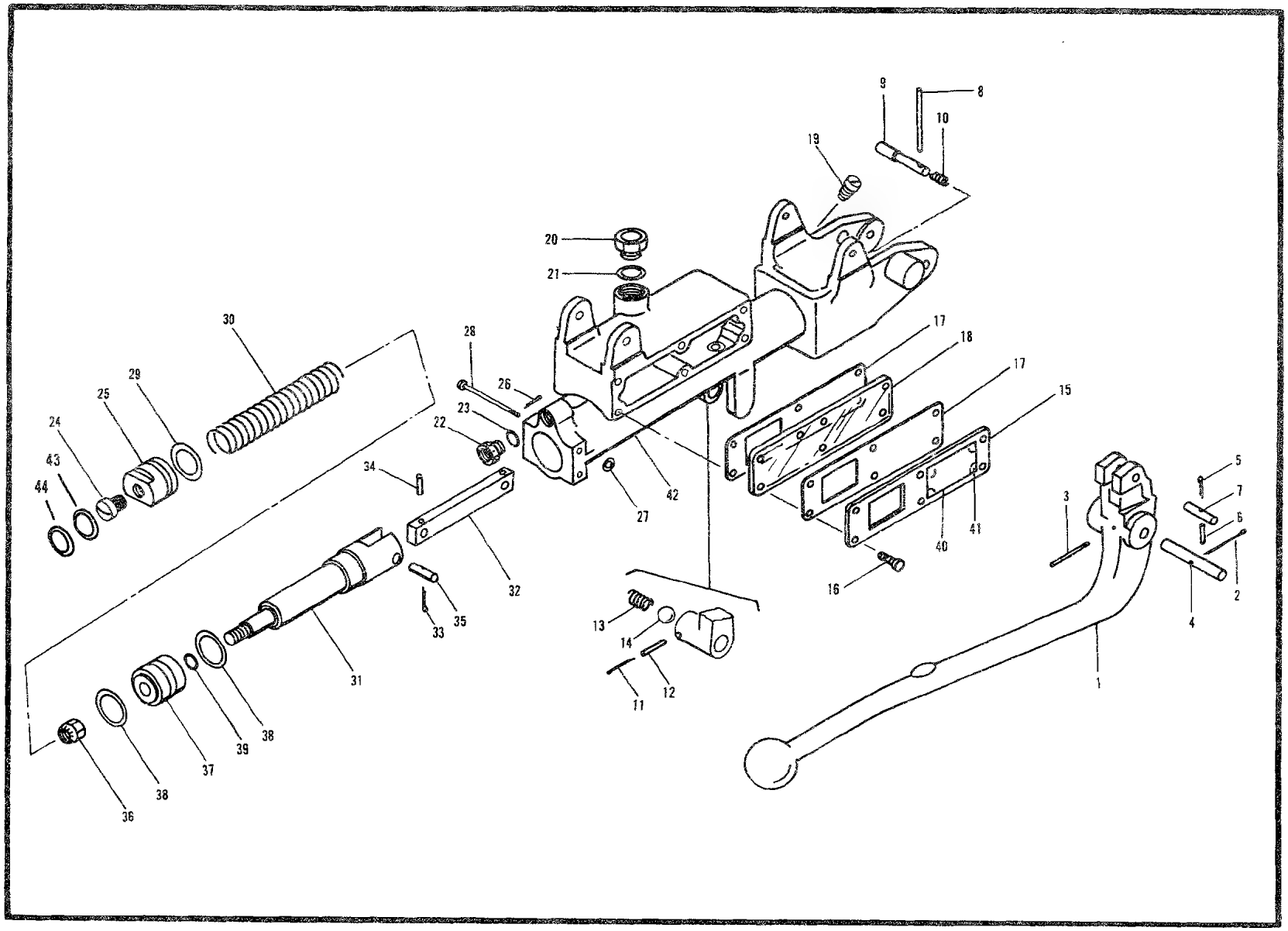

Figure 85B. Master Cylinder, Brake

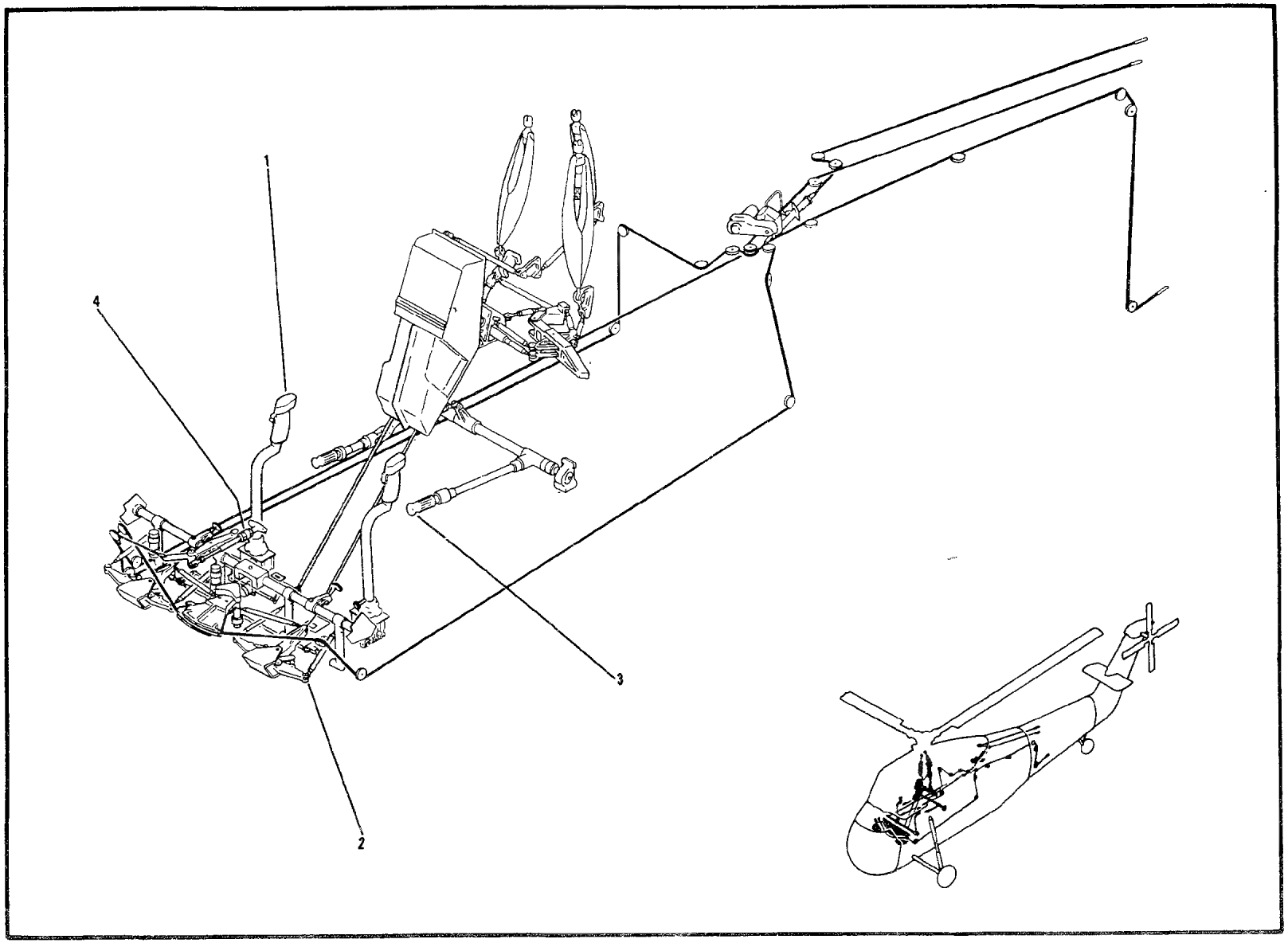

Figure 86. Forward Flight Controls Installation

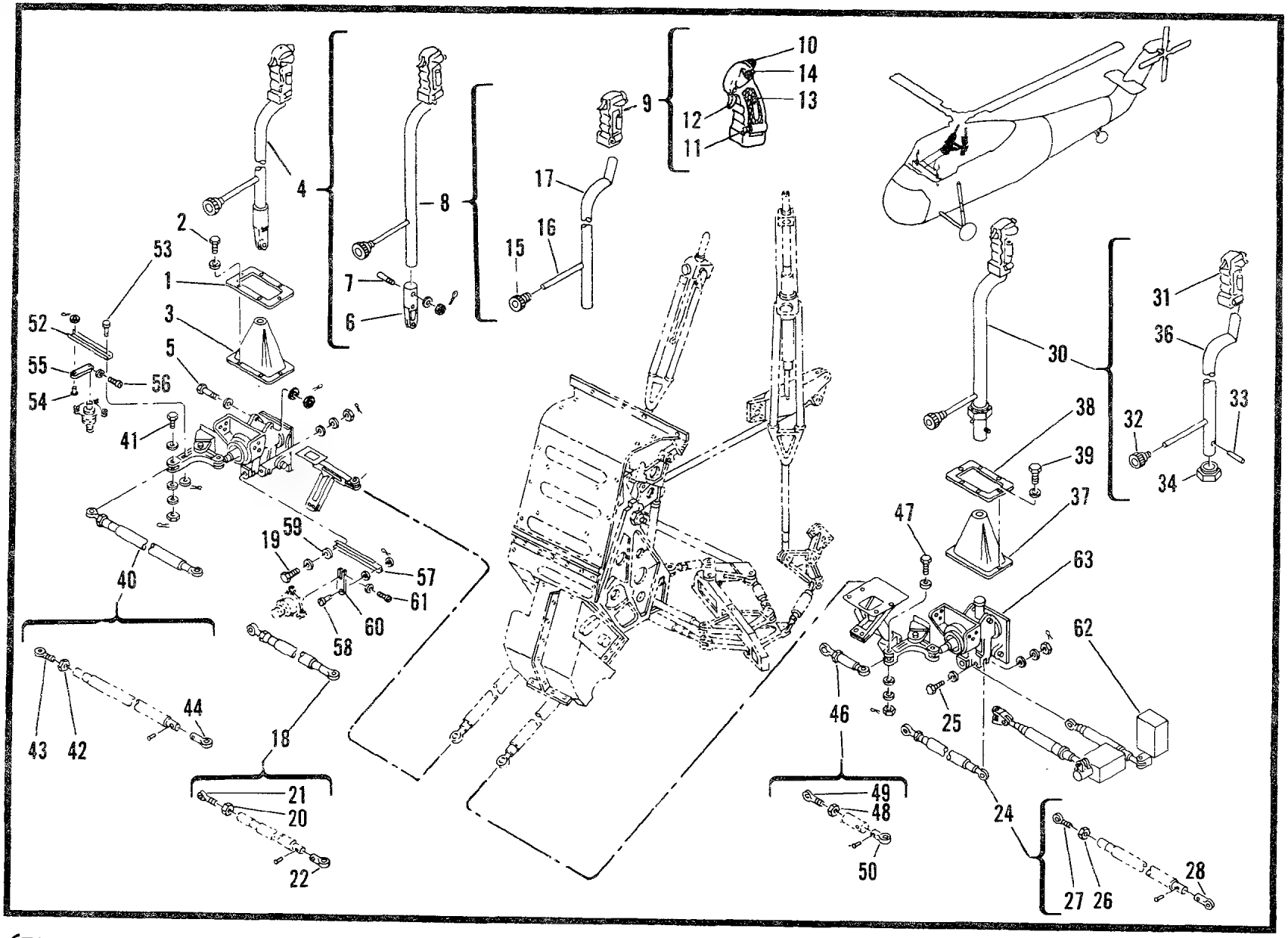

Figure 87. Azimuth Controls Installation (Sheet 1 of 3)

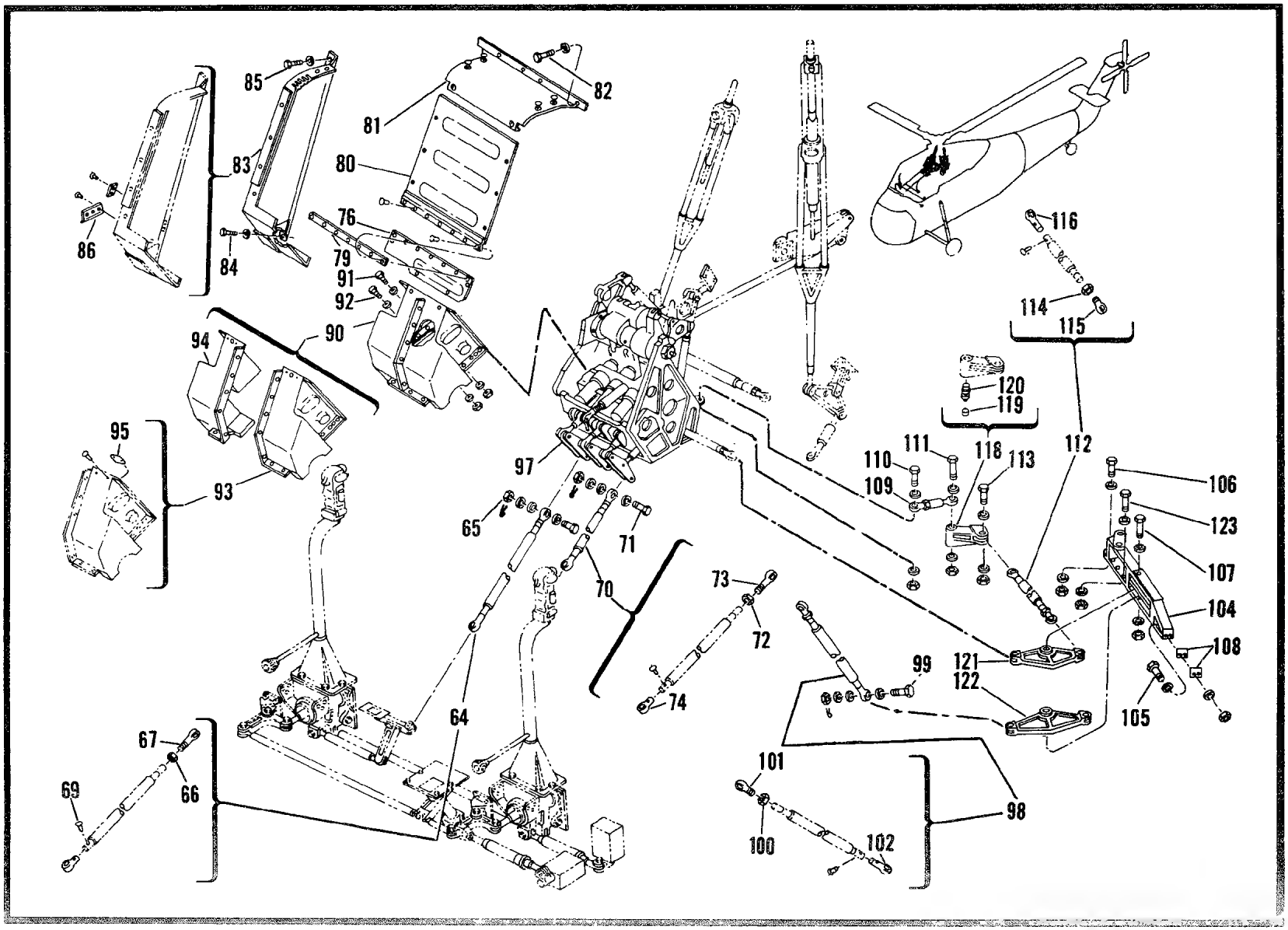

Figure 87. Azimuth Controls Installation (Sheet 2 of 3)

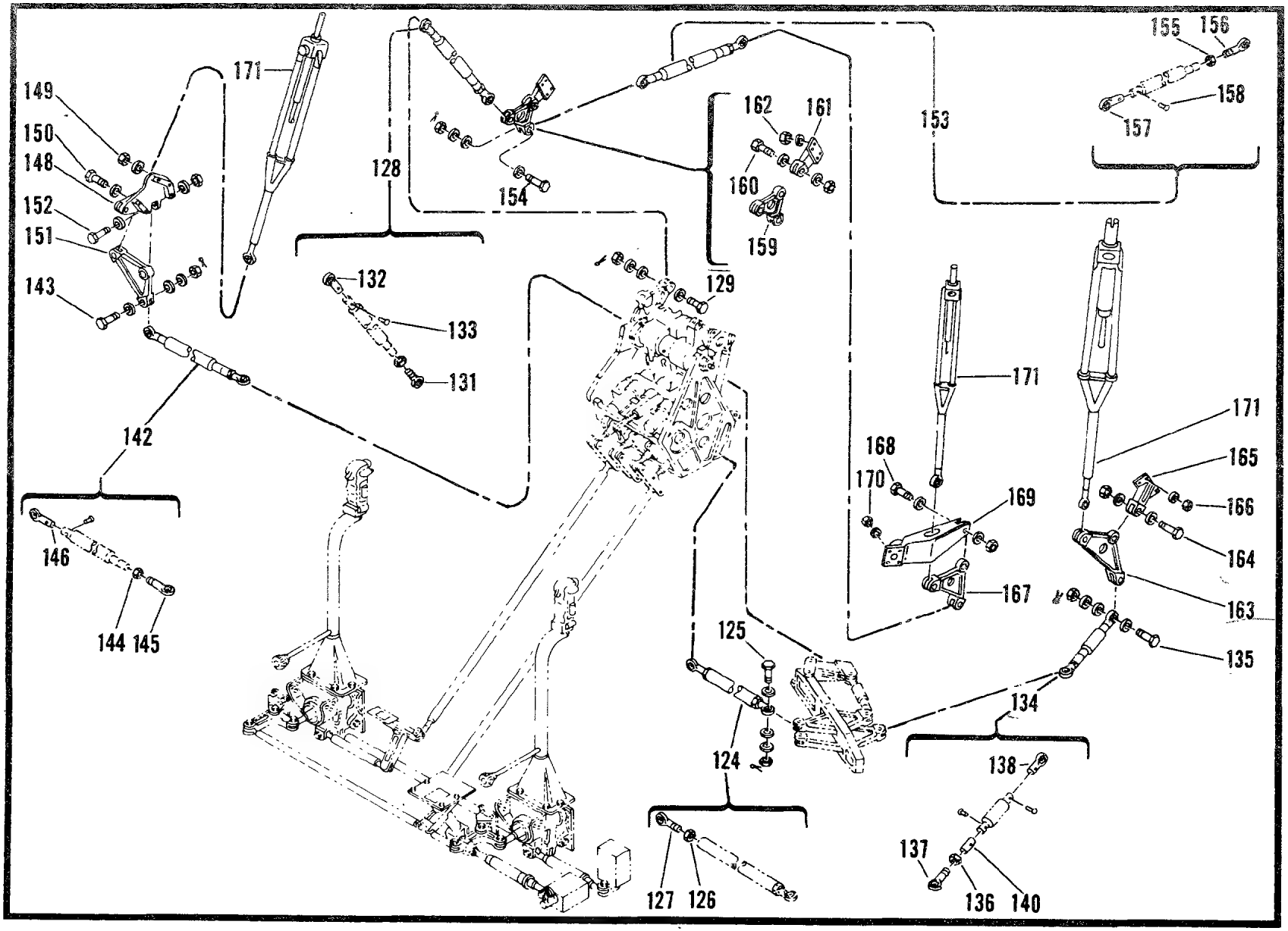

Figure 87. Azimuth Controls Installation (Sheet 3 of 3)

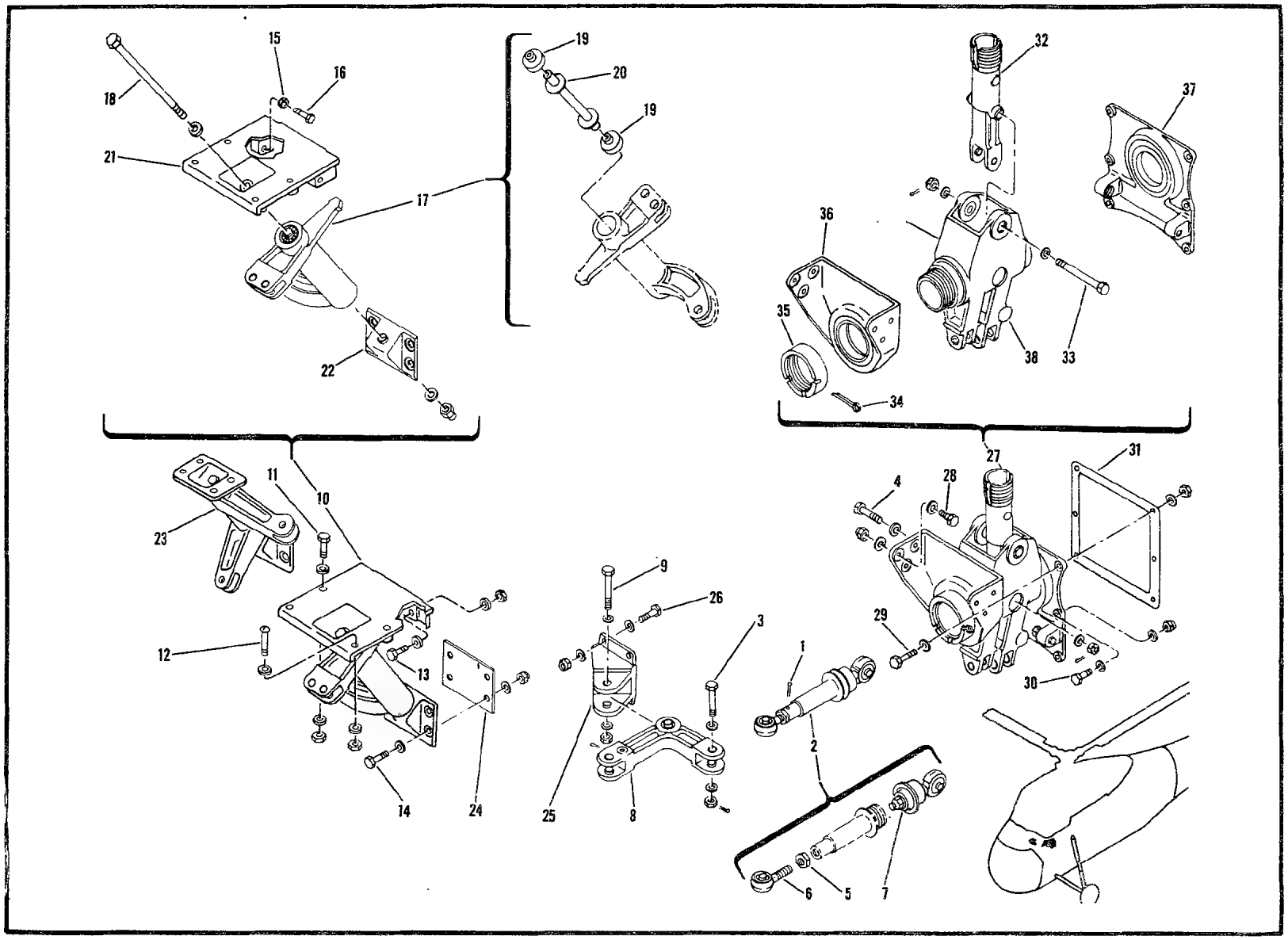

Figure 88. Socket and Yoke Installation

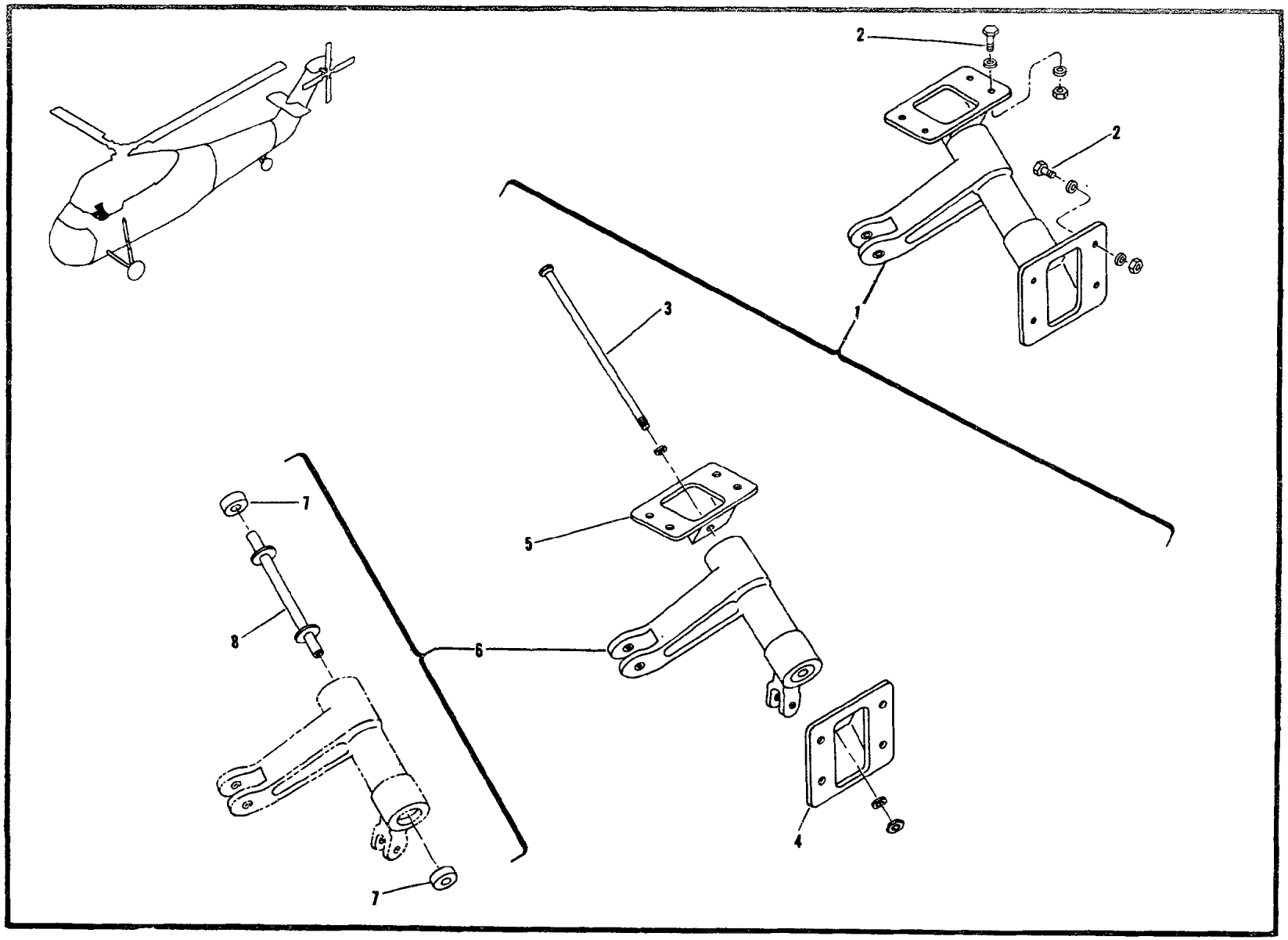

Figure 89. Pilots Bell Crank Installation

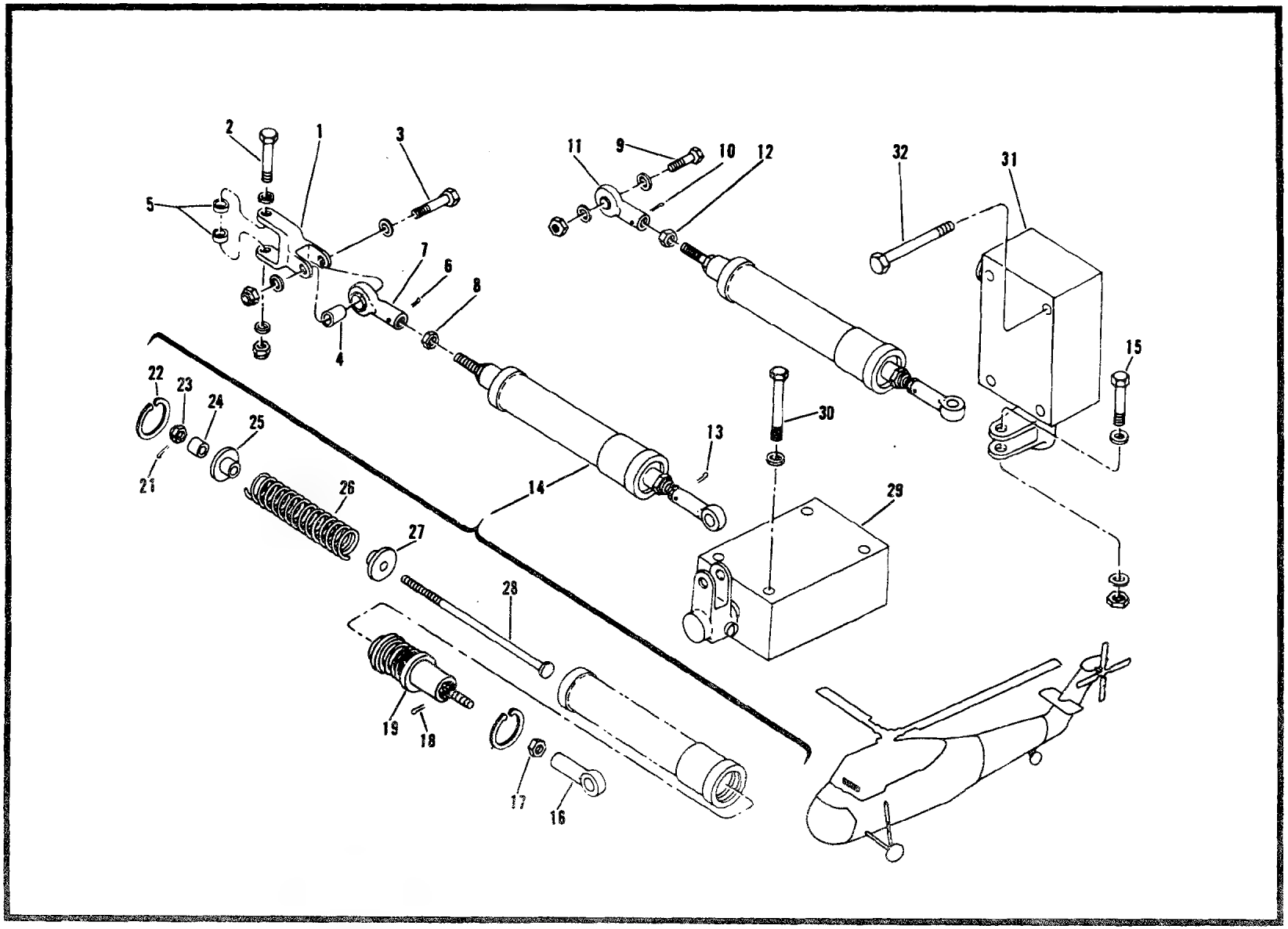

Figure 90. Force Gradient Installation

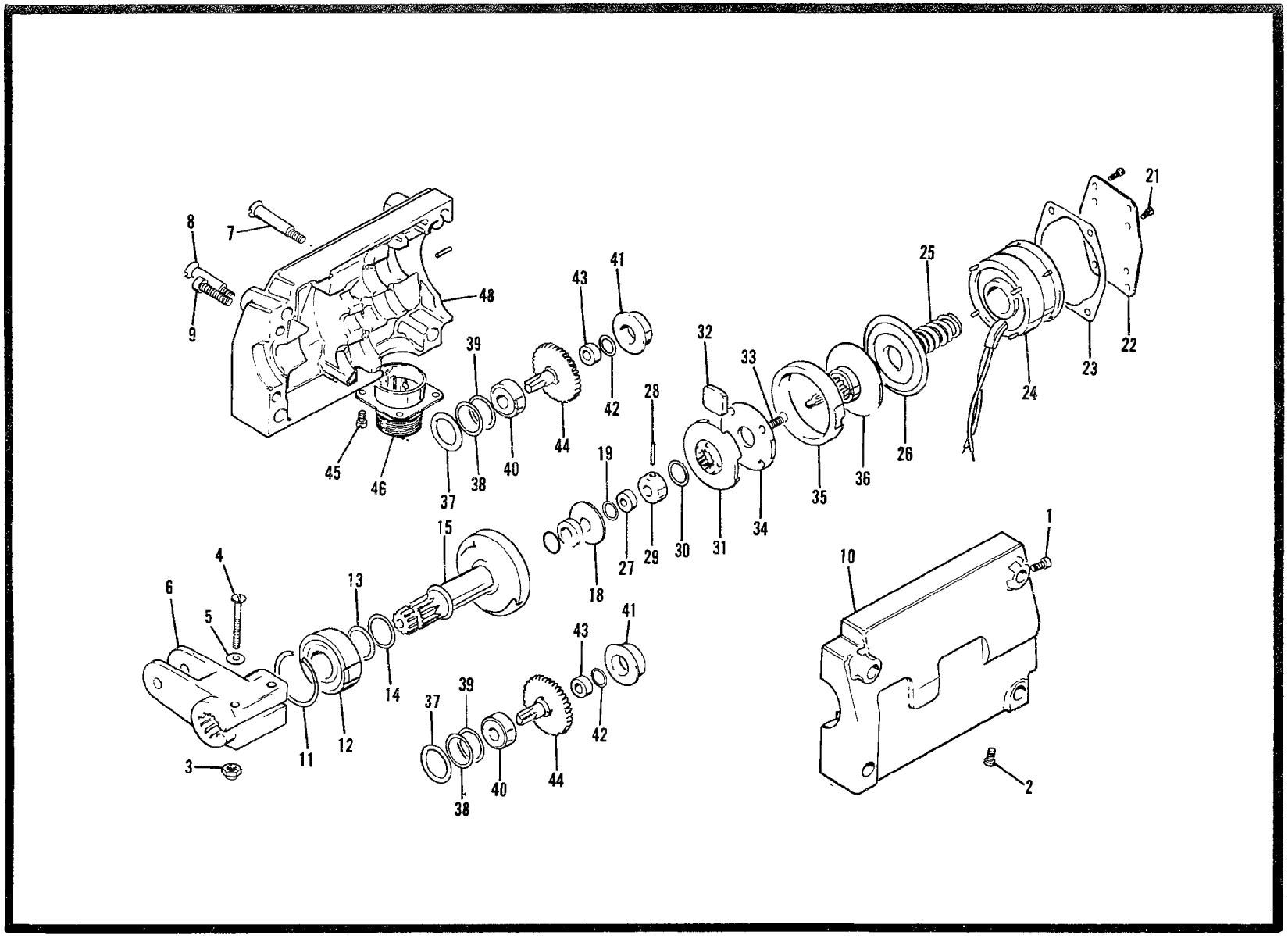

Figure 90A. Magnetic Brake, Gardient

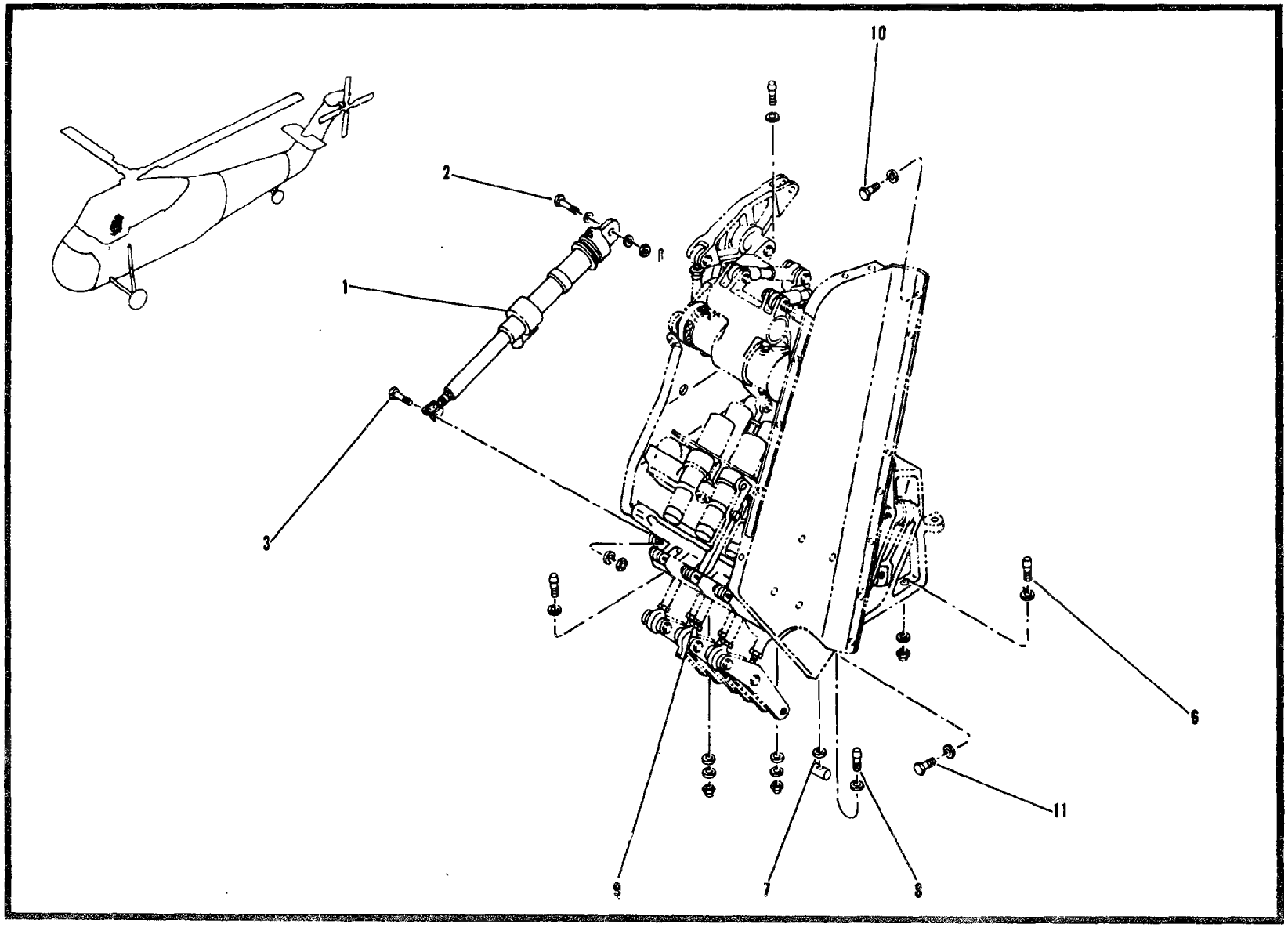

Figure 91. Mixer and Servo Installation (Sheet 1 of 2)

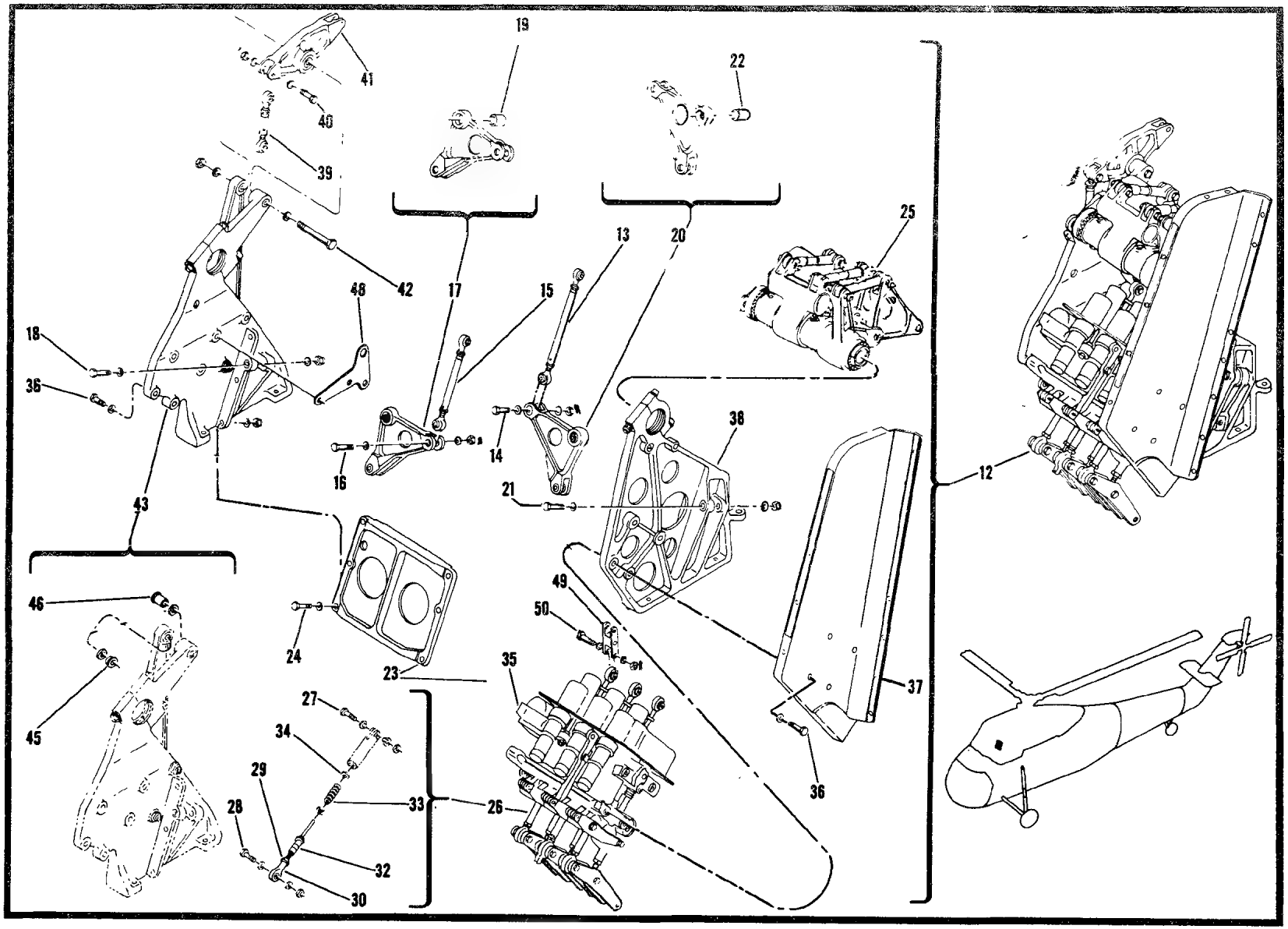

Figure 91. Mixer and Servo Installation (Sheet 2 of 2)

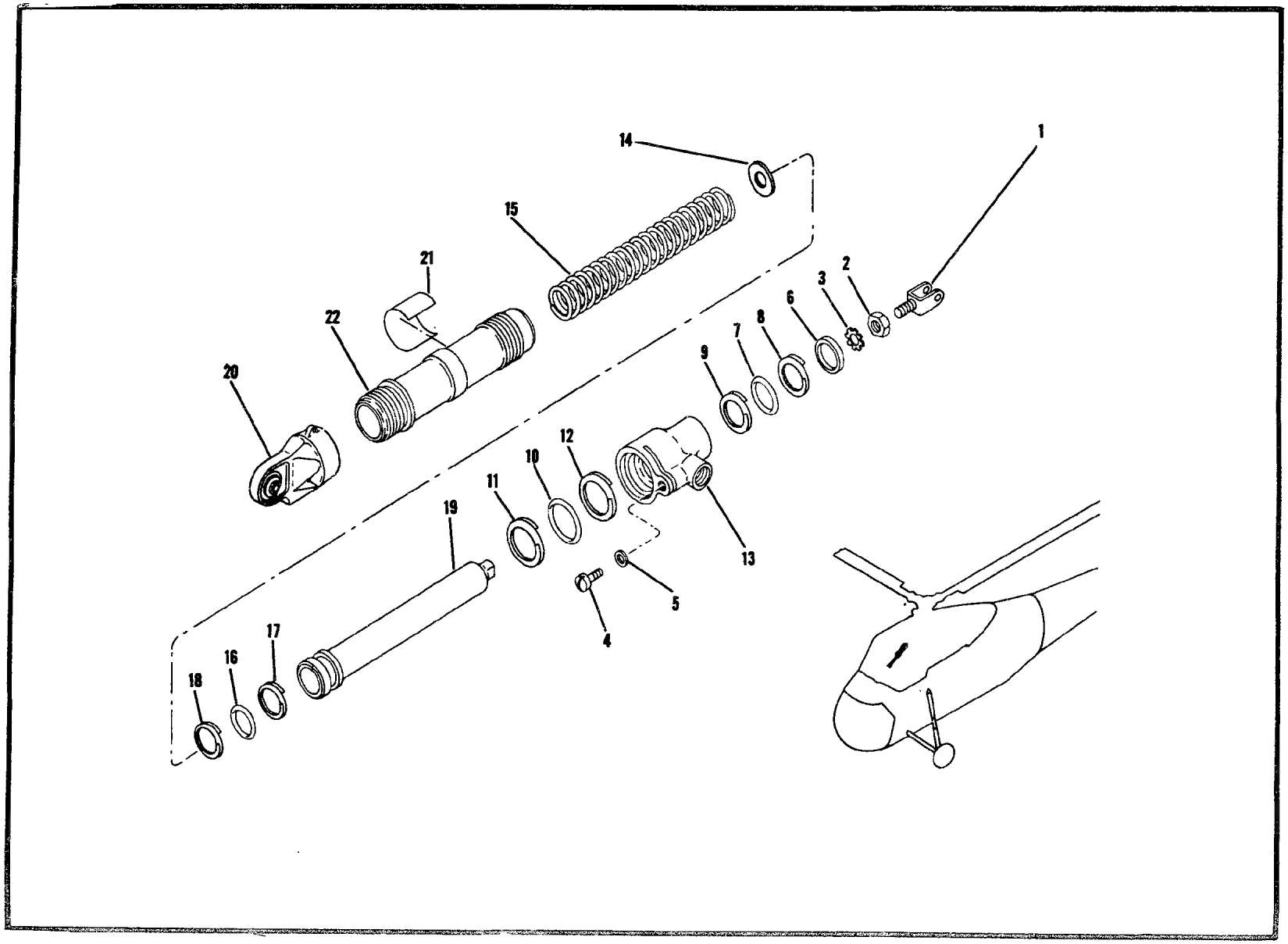

Figure 92. Cylinder Assembly–Servo Unit Actuating

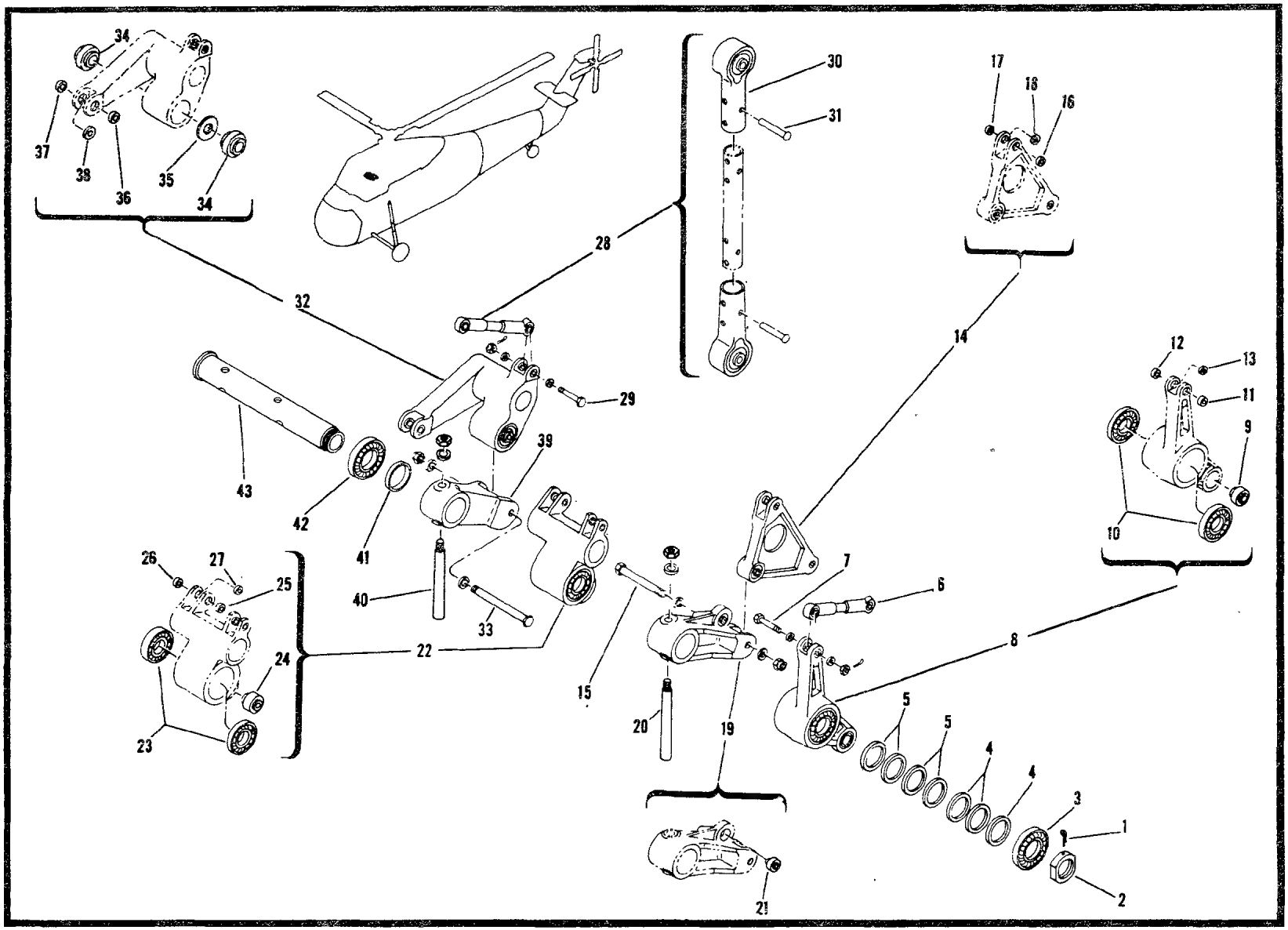

Figure 93. Mixer Assembly

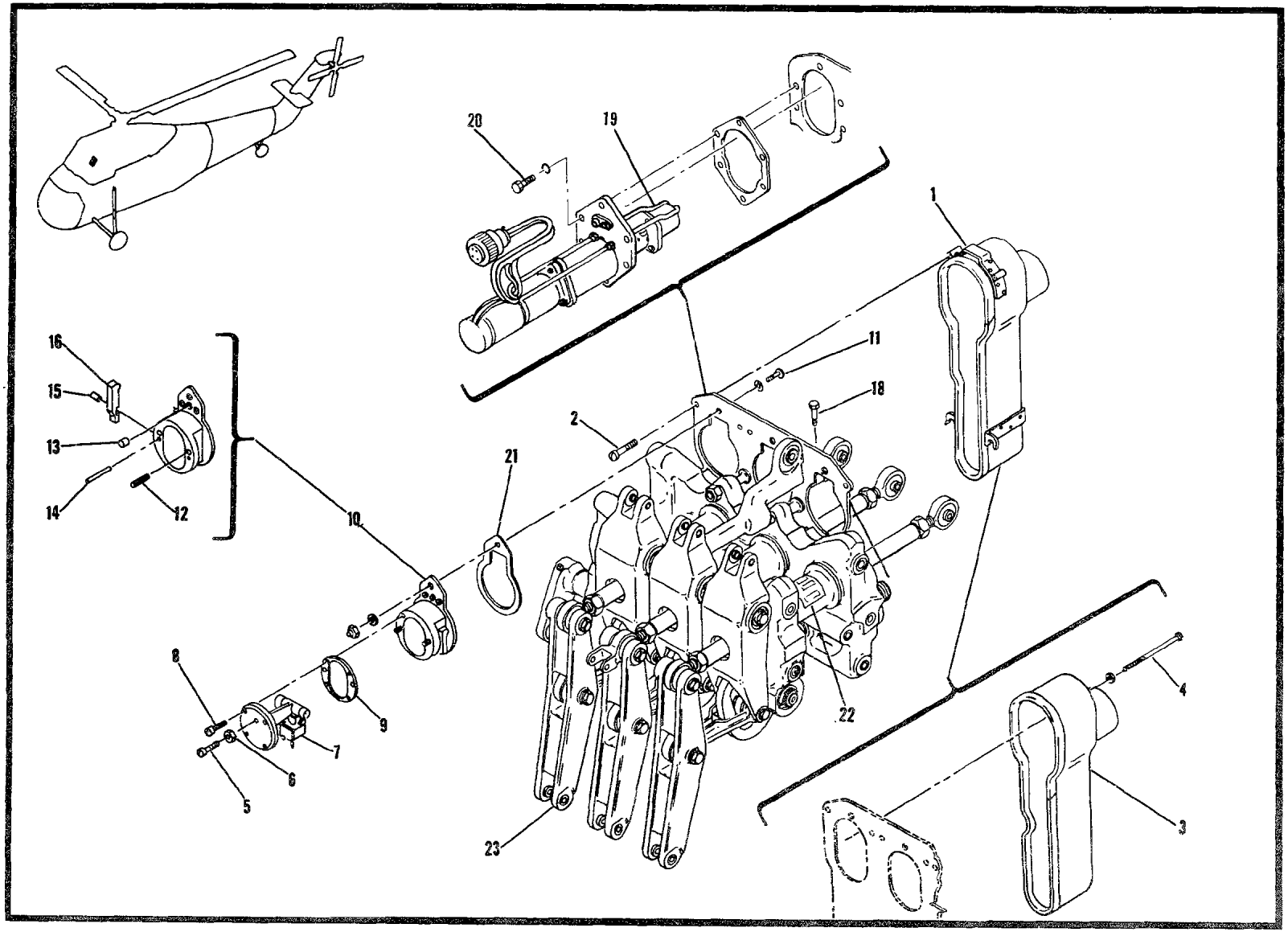

Figure 94. Servo Unit Assembly, Hydraulic

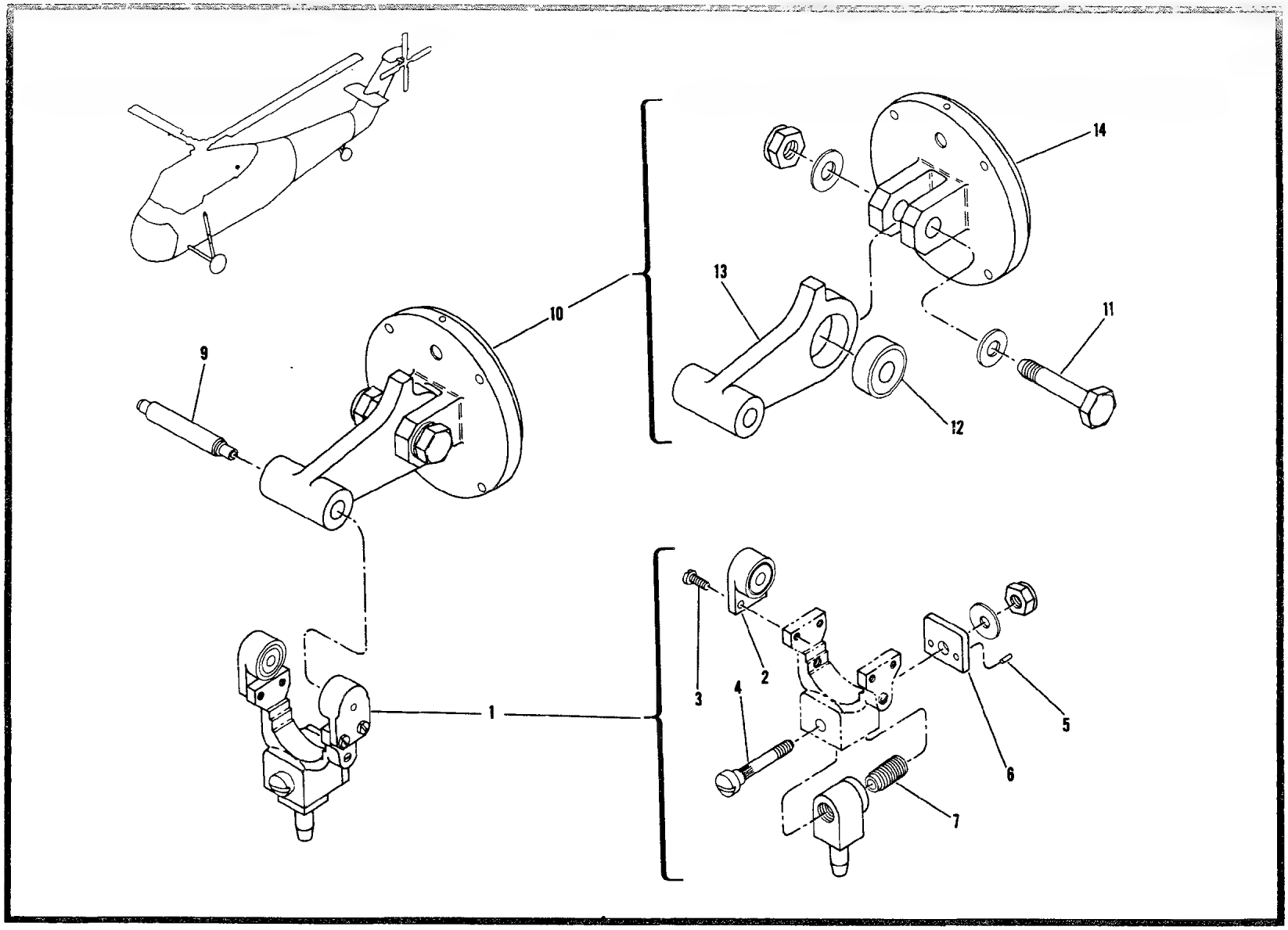

Figure 95. Dummy Motor Assembly

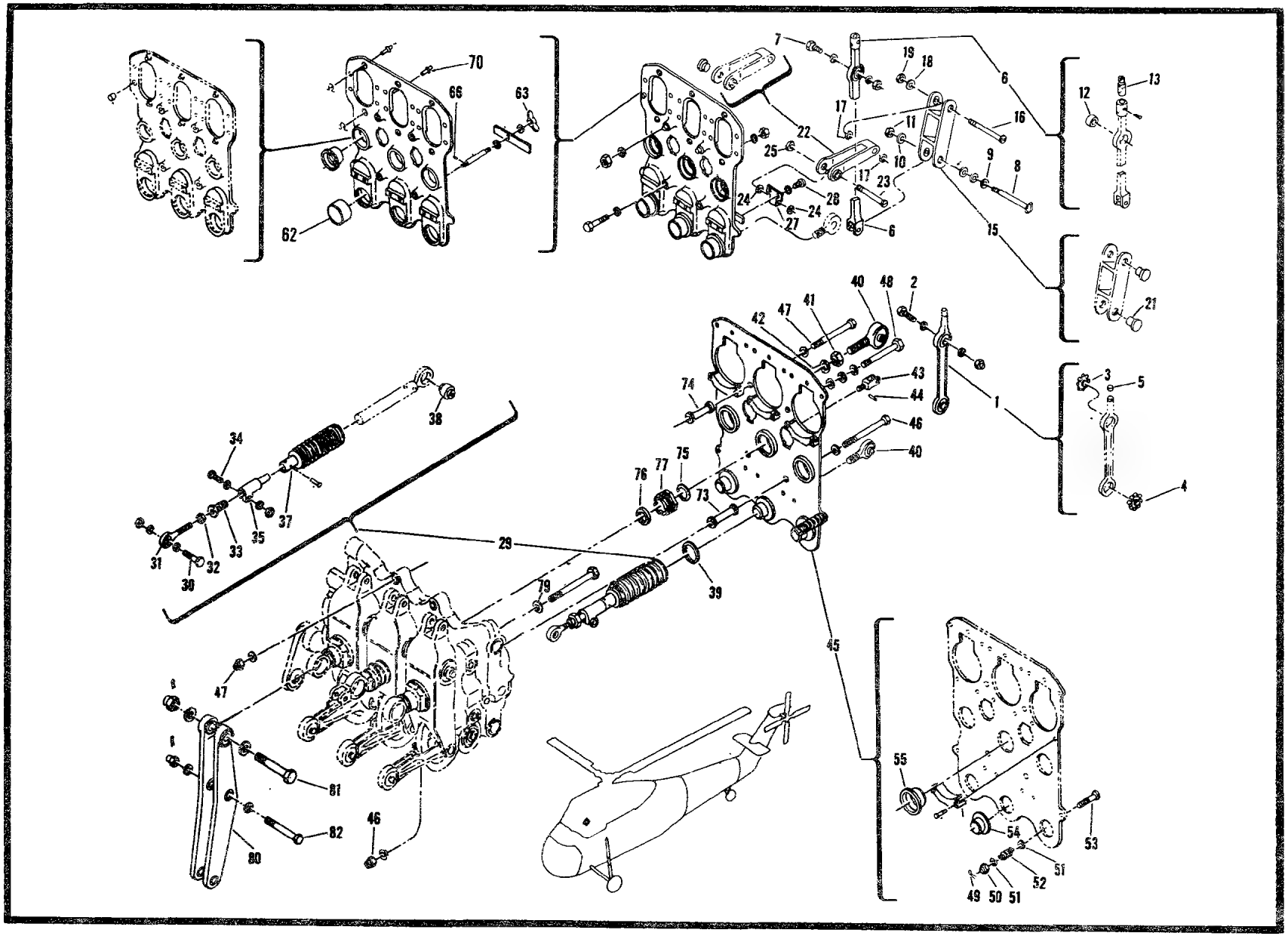

Figure 96. Servo Unit Subassembly (Sheet 1 of 2)

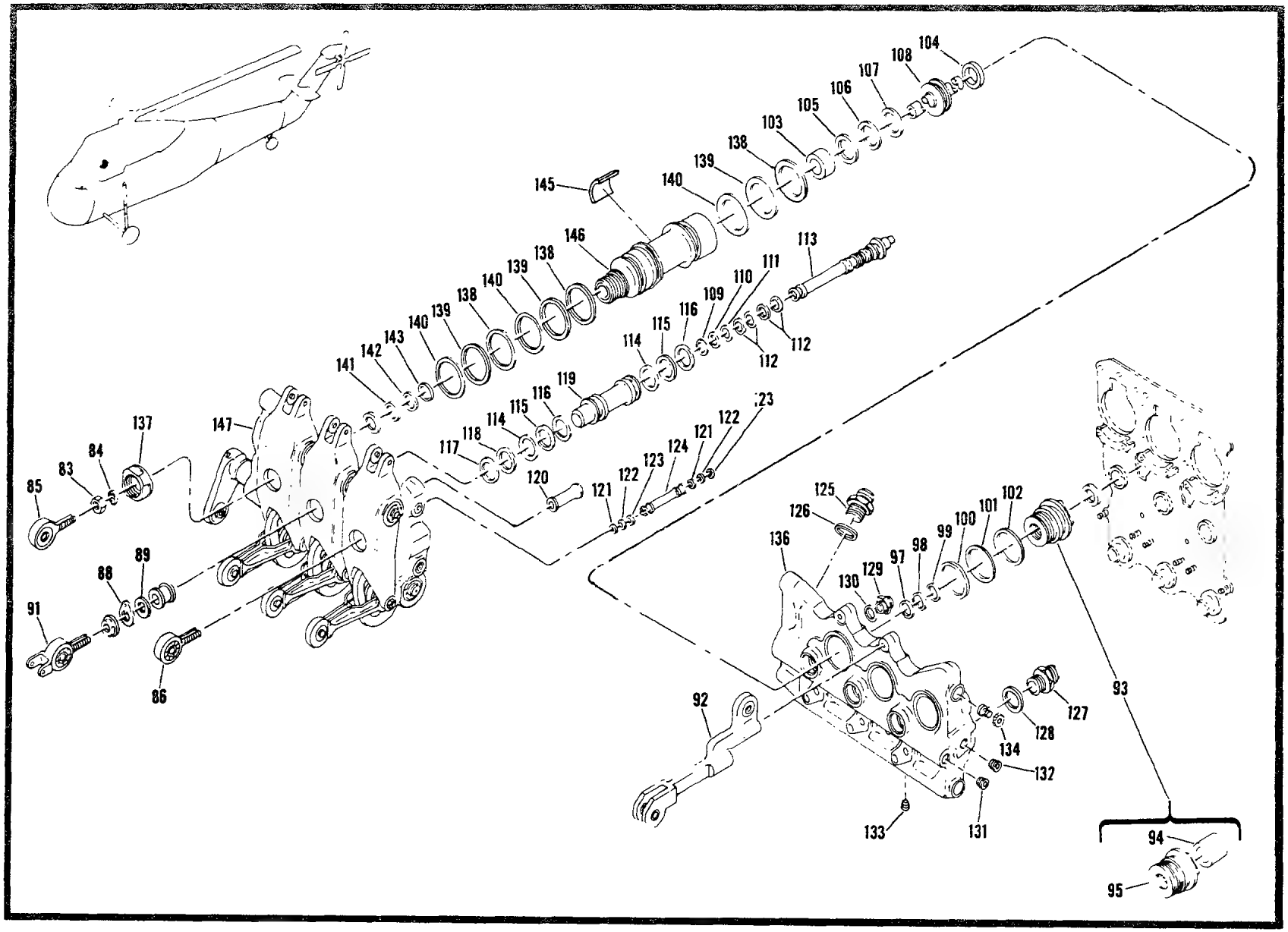

Figure 96. Servo Unit Subassembly (Sheet 2 of 2)

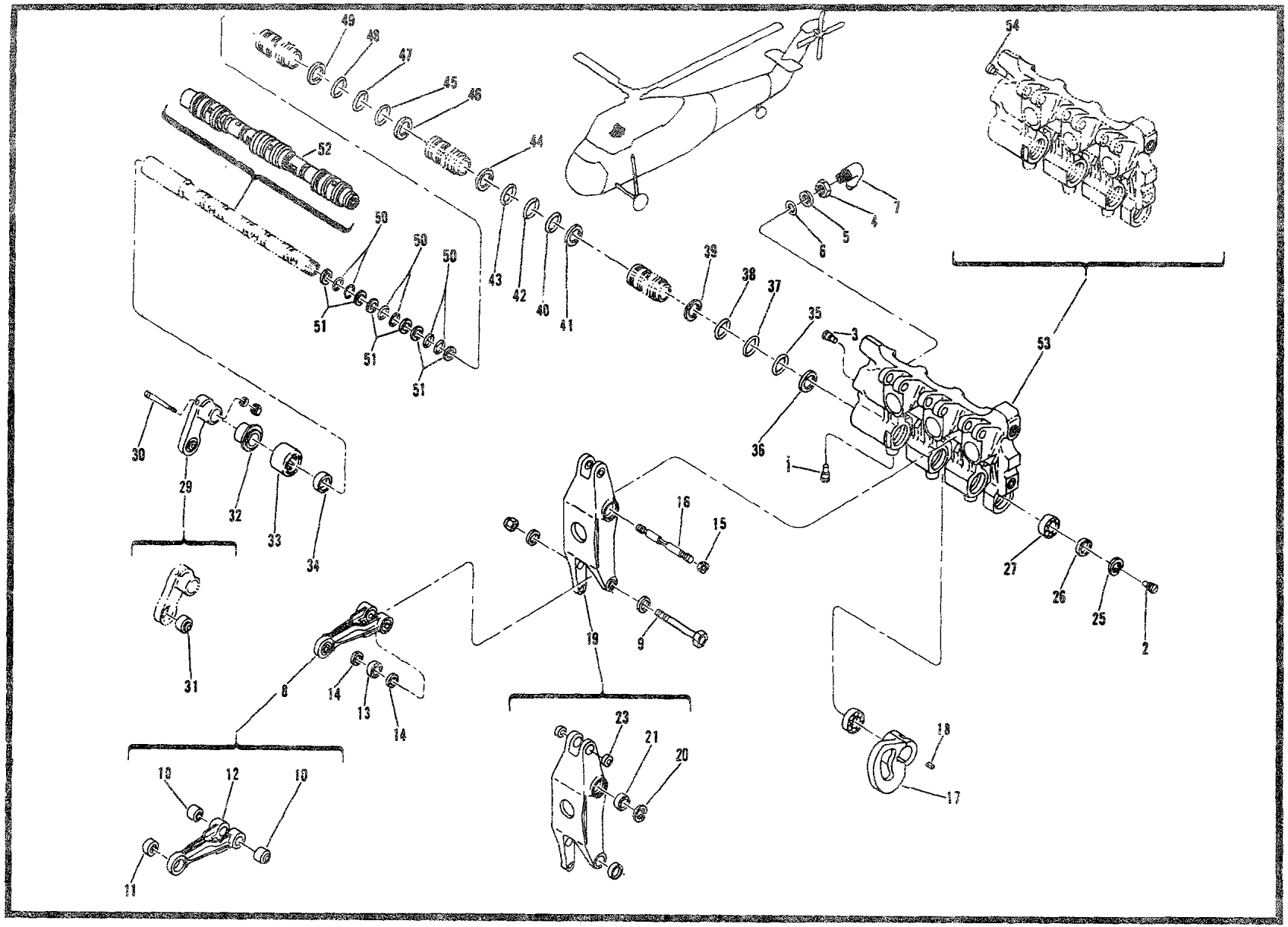

Figure 97. Plate Assembly, Servo Unit

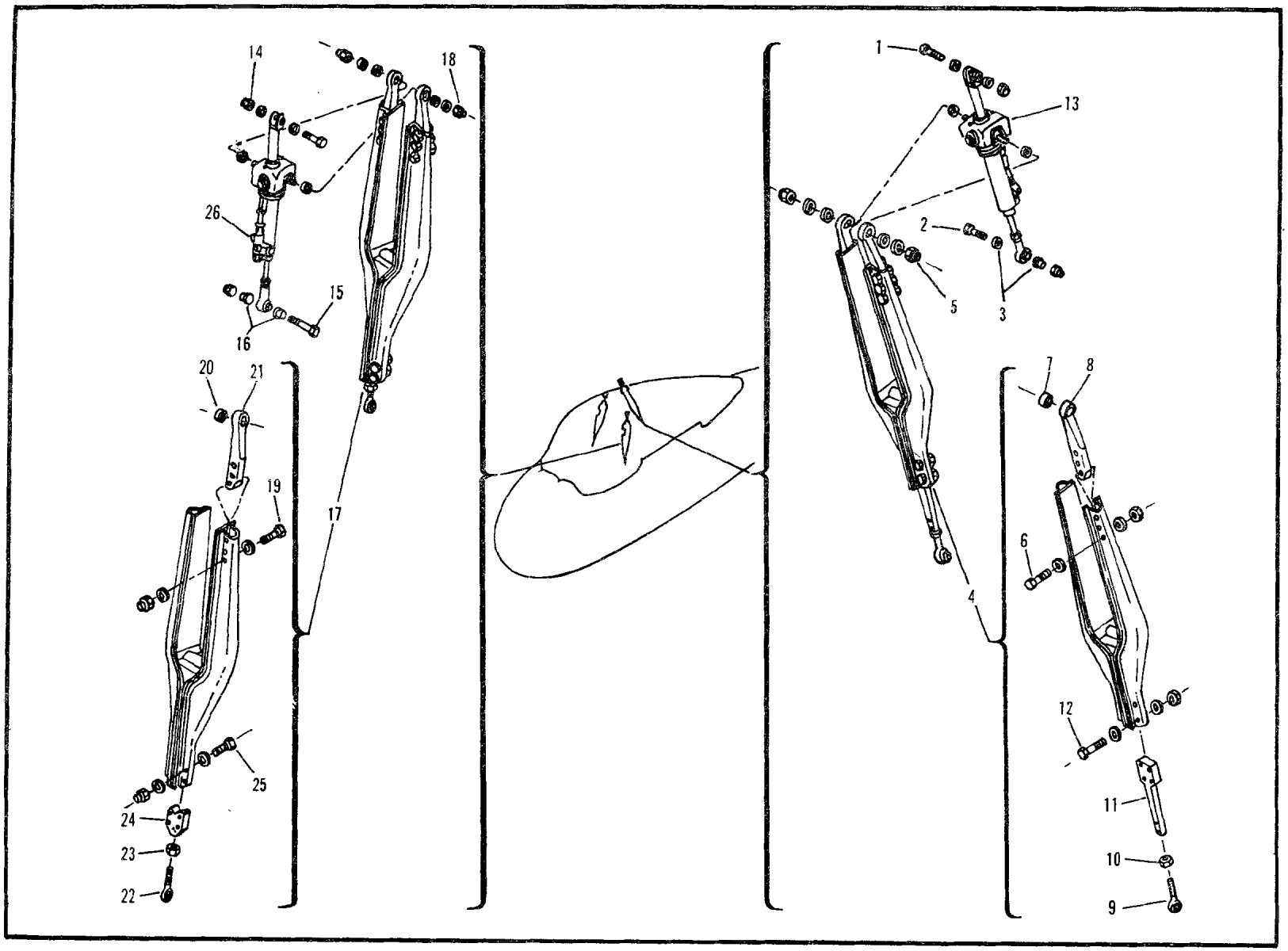

Figure 98. Main Rotor Servo Controls Installation

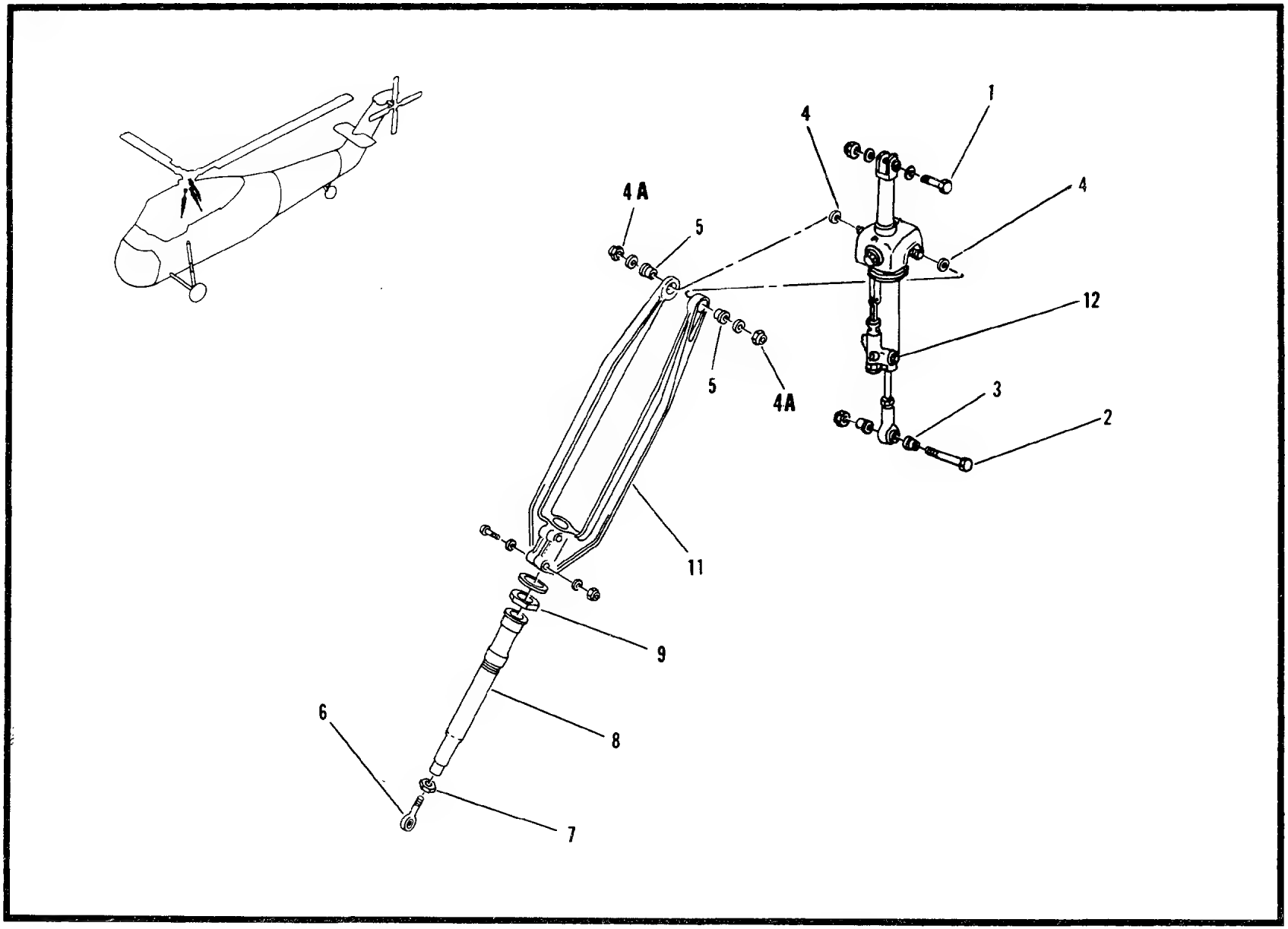

Figure 99. Main Rotor Servo Controls Installation

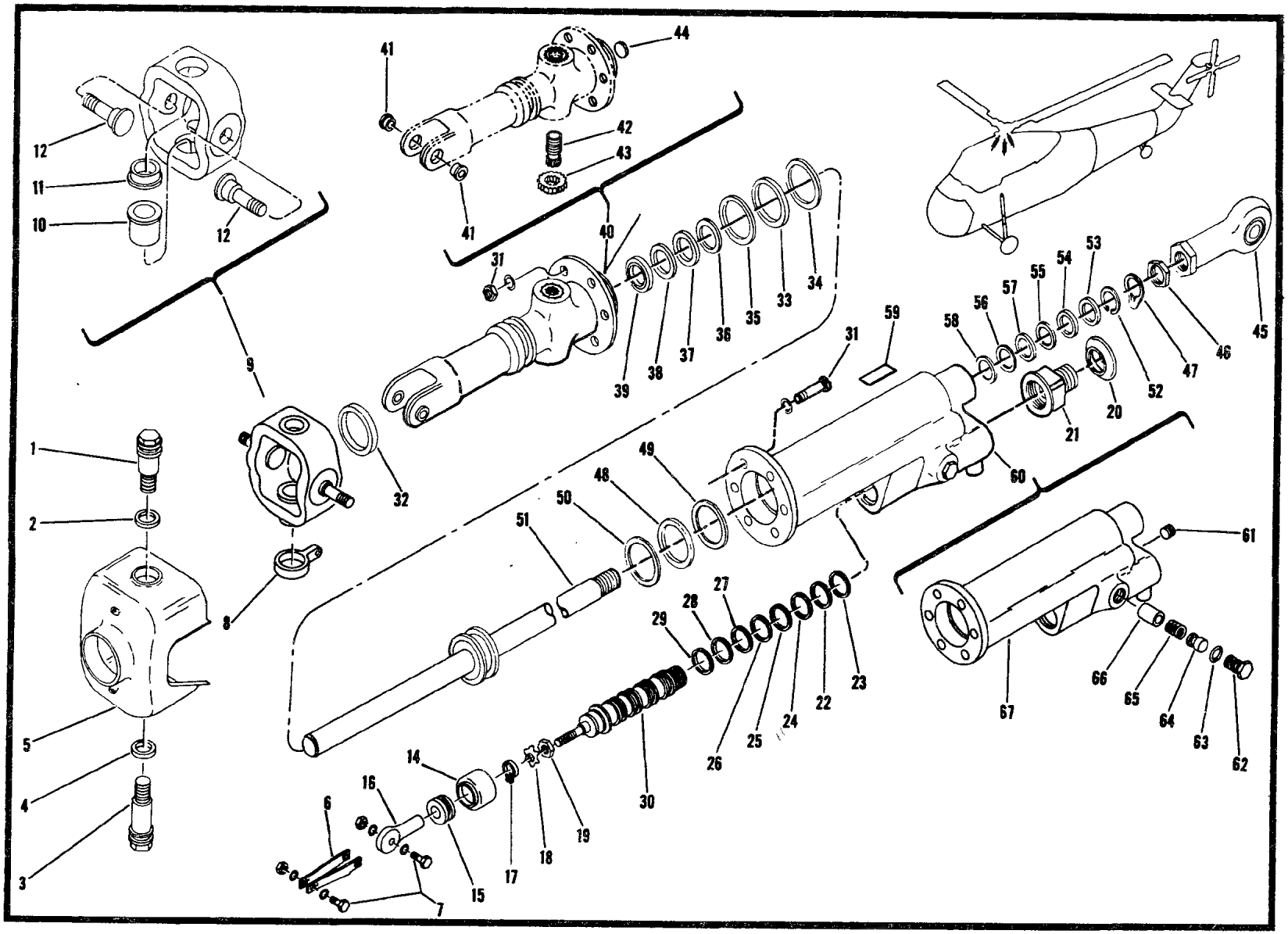

Figure 100. Servo Unit Assembly, Main Rotor

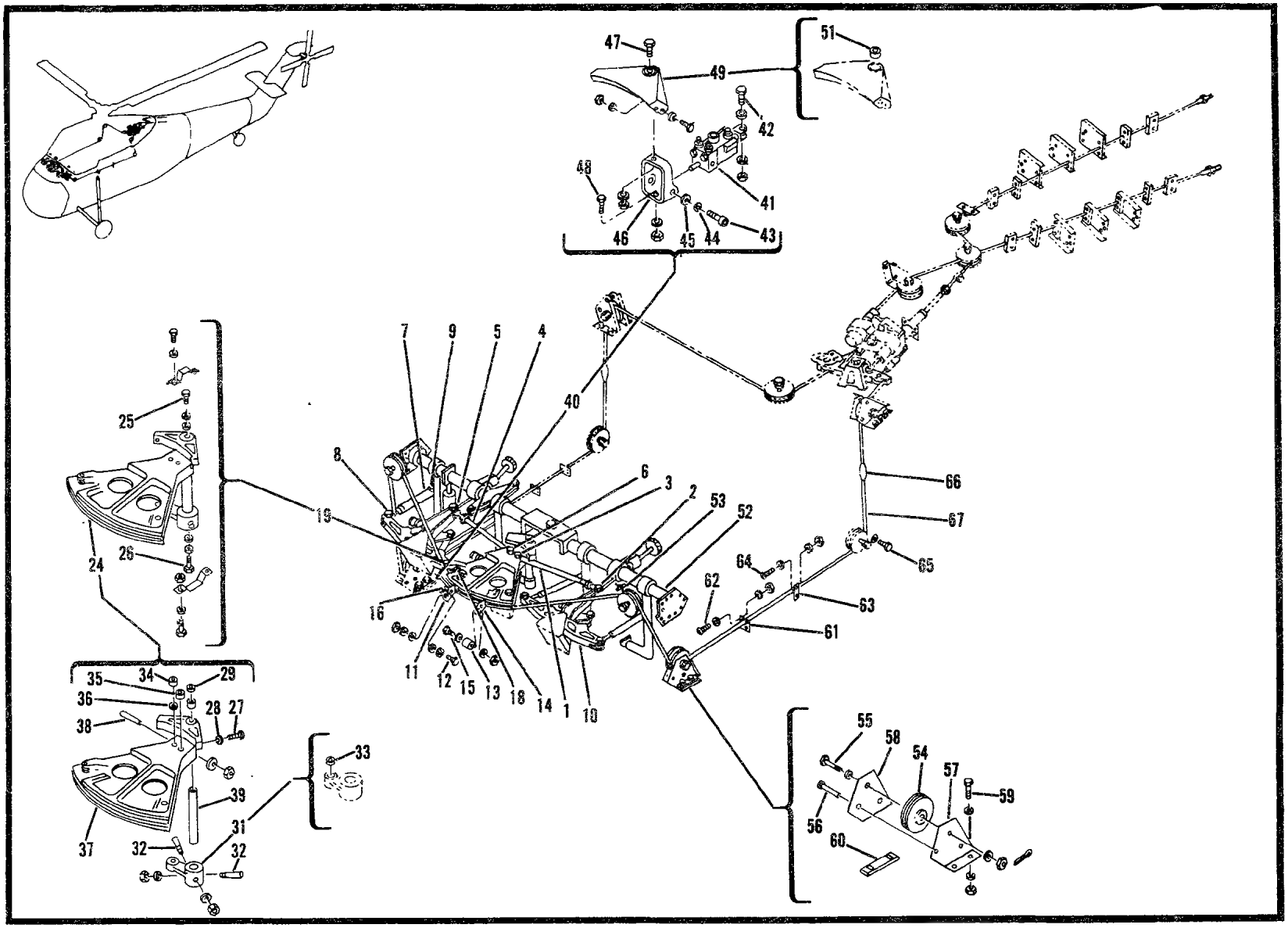

Figure 101. Forward Directional Controls Installation (Sheet 1 of 2)

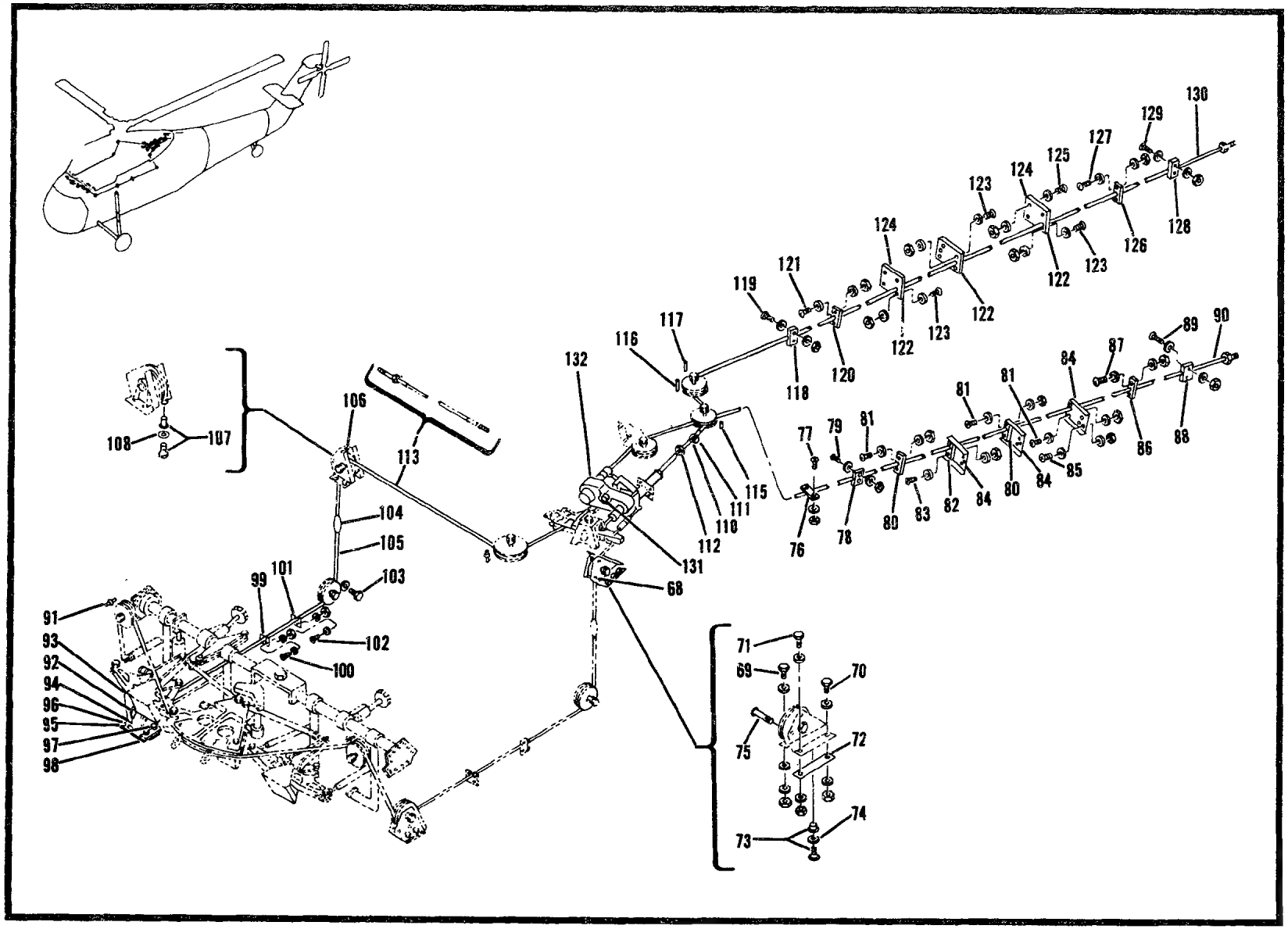

Figure 101. Forward Directional Controls Installation (Sheet 2 of 2)

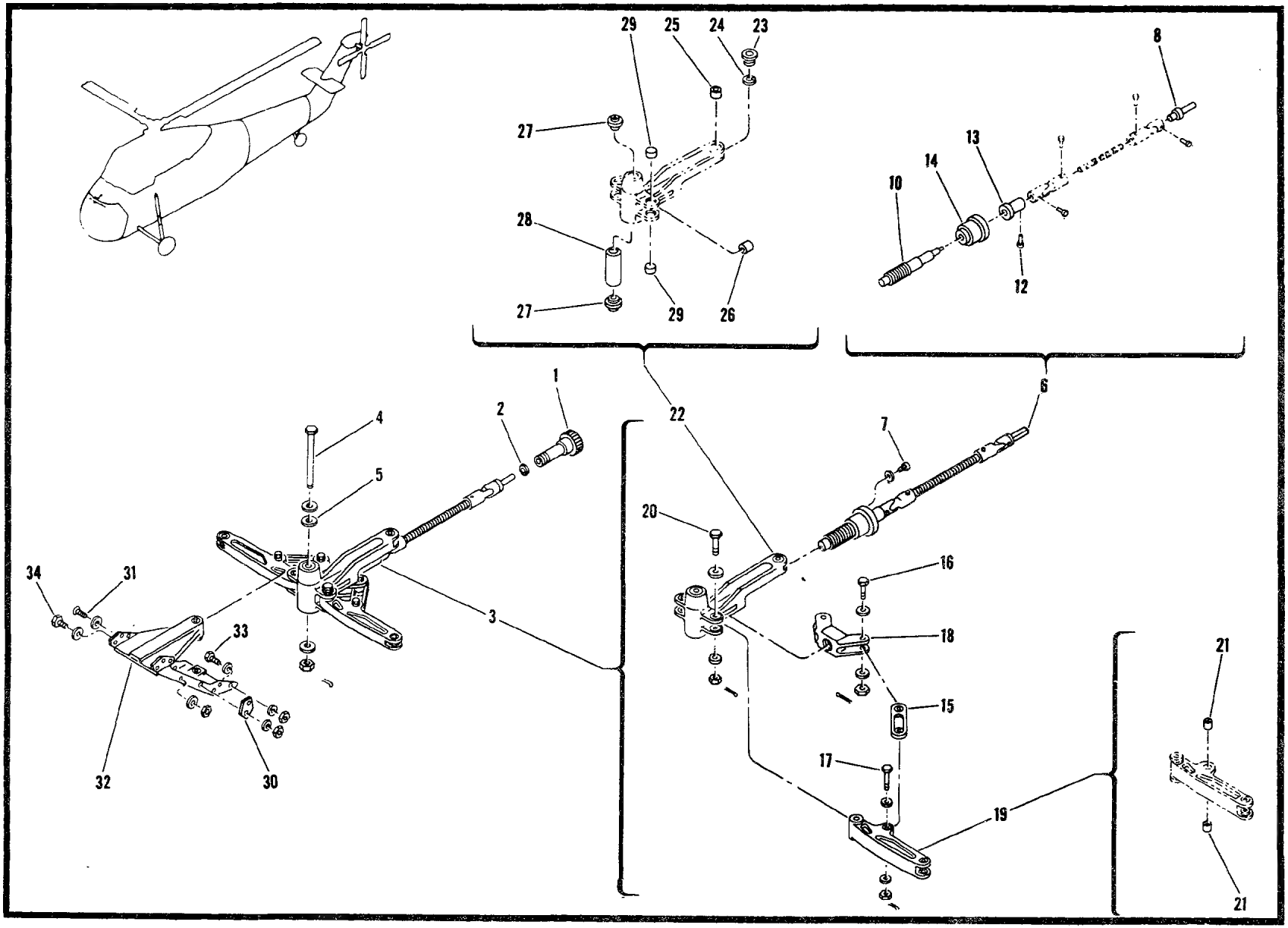

Figure 102. Adjustor Installation

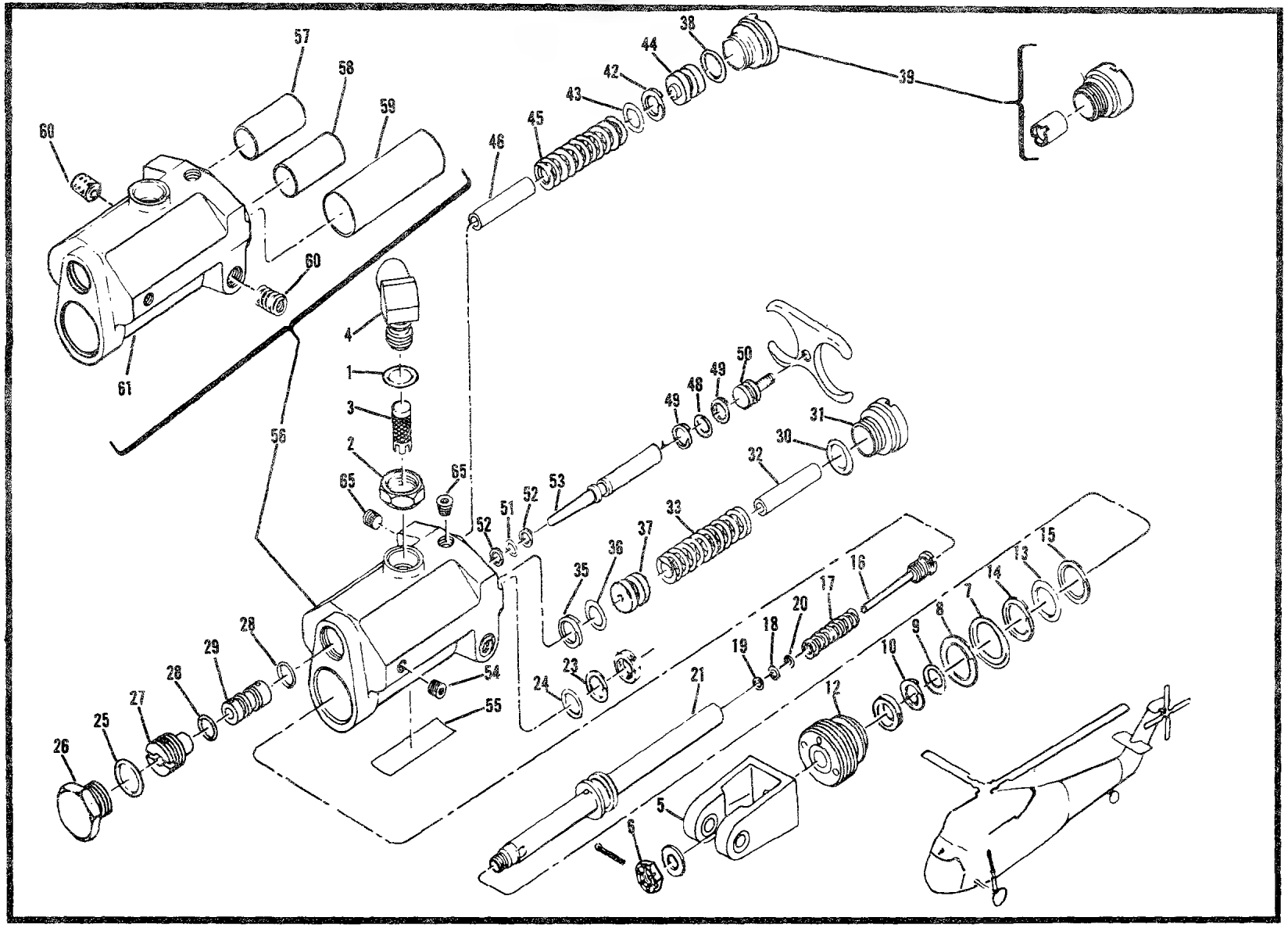

Figure 103. Dampener, Flutter.

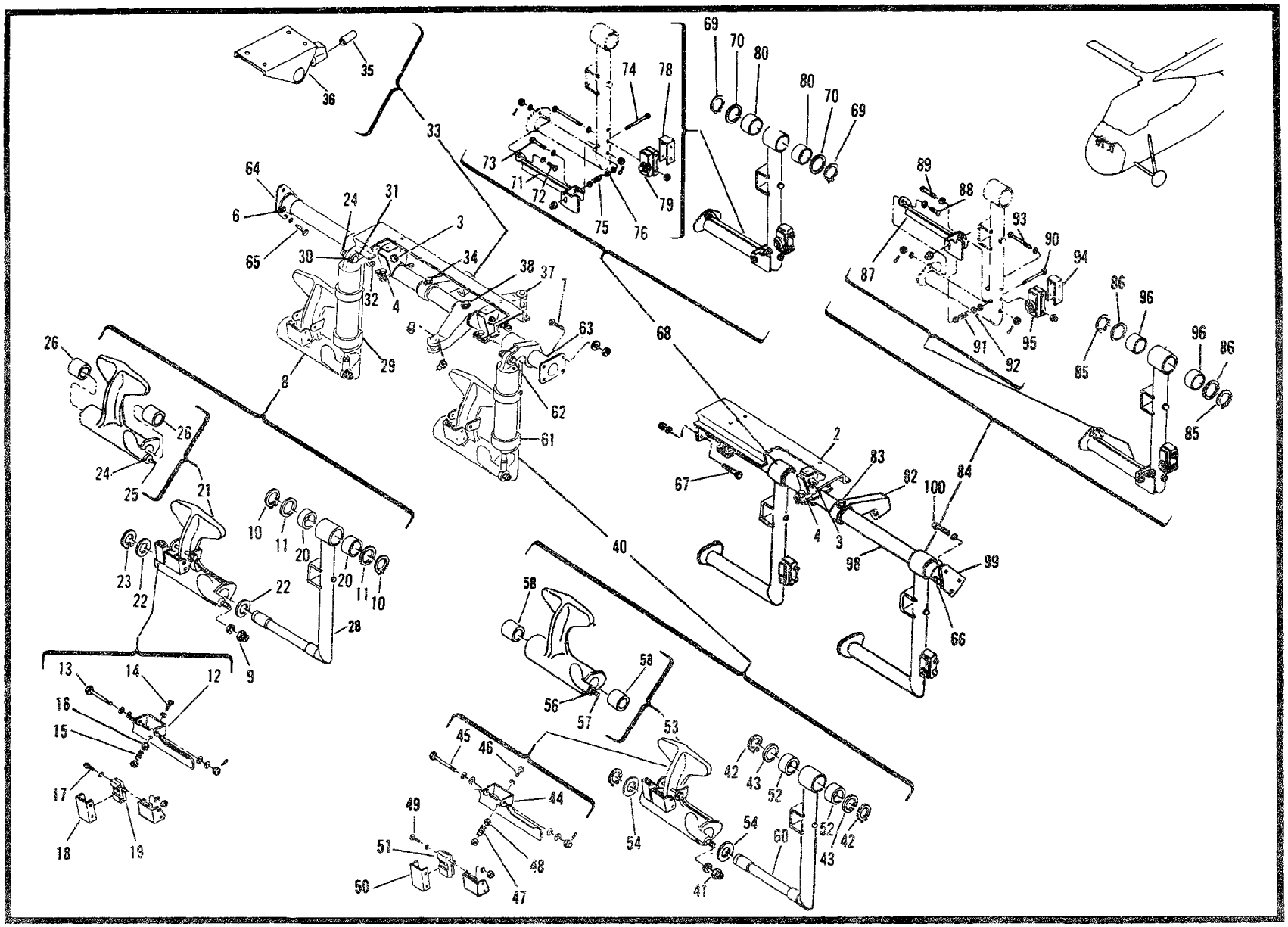

Figure 104. Pedal and Support Installation

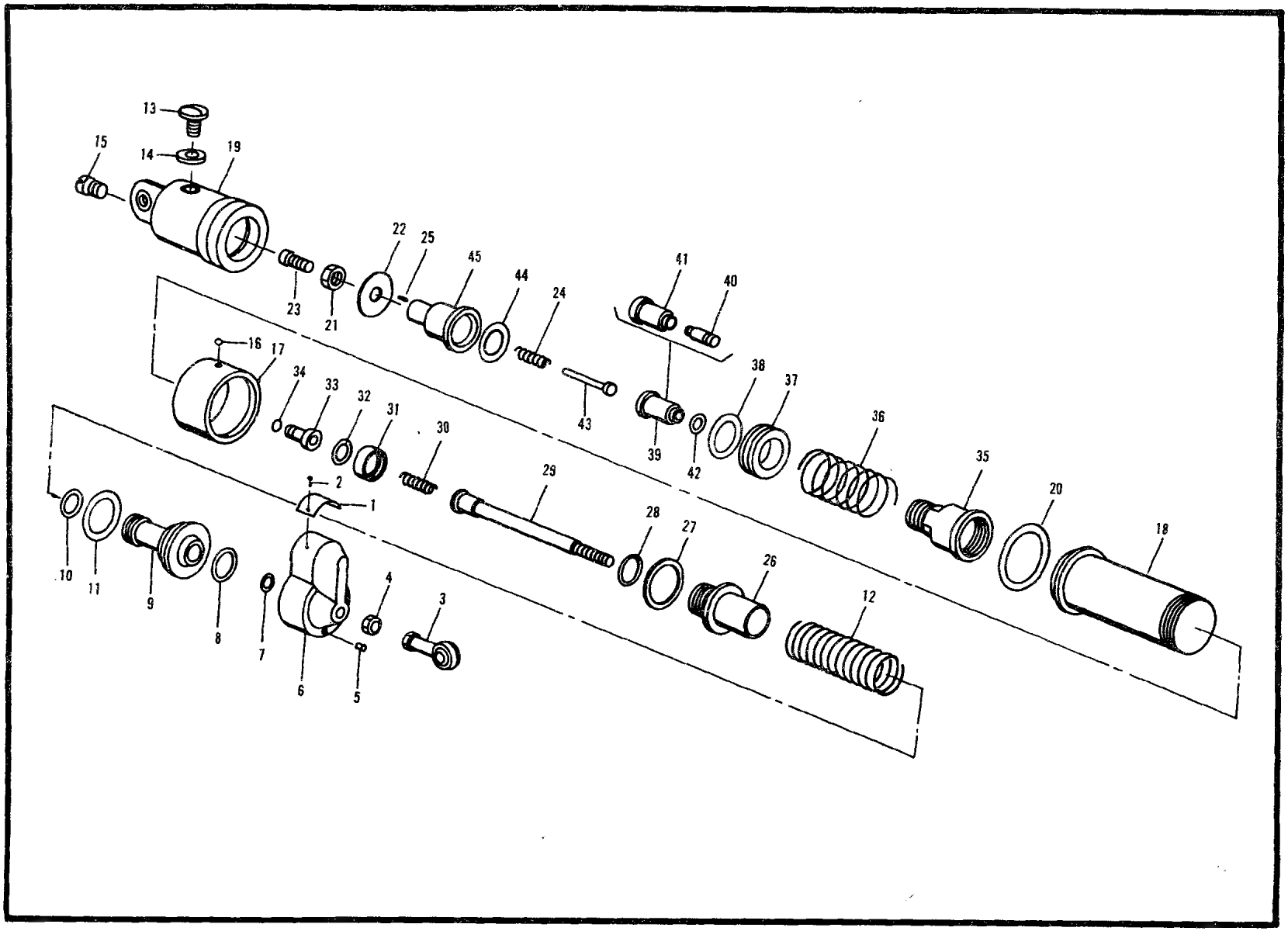

Figure 104A. Cylinder Assembly

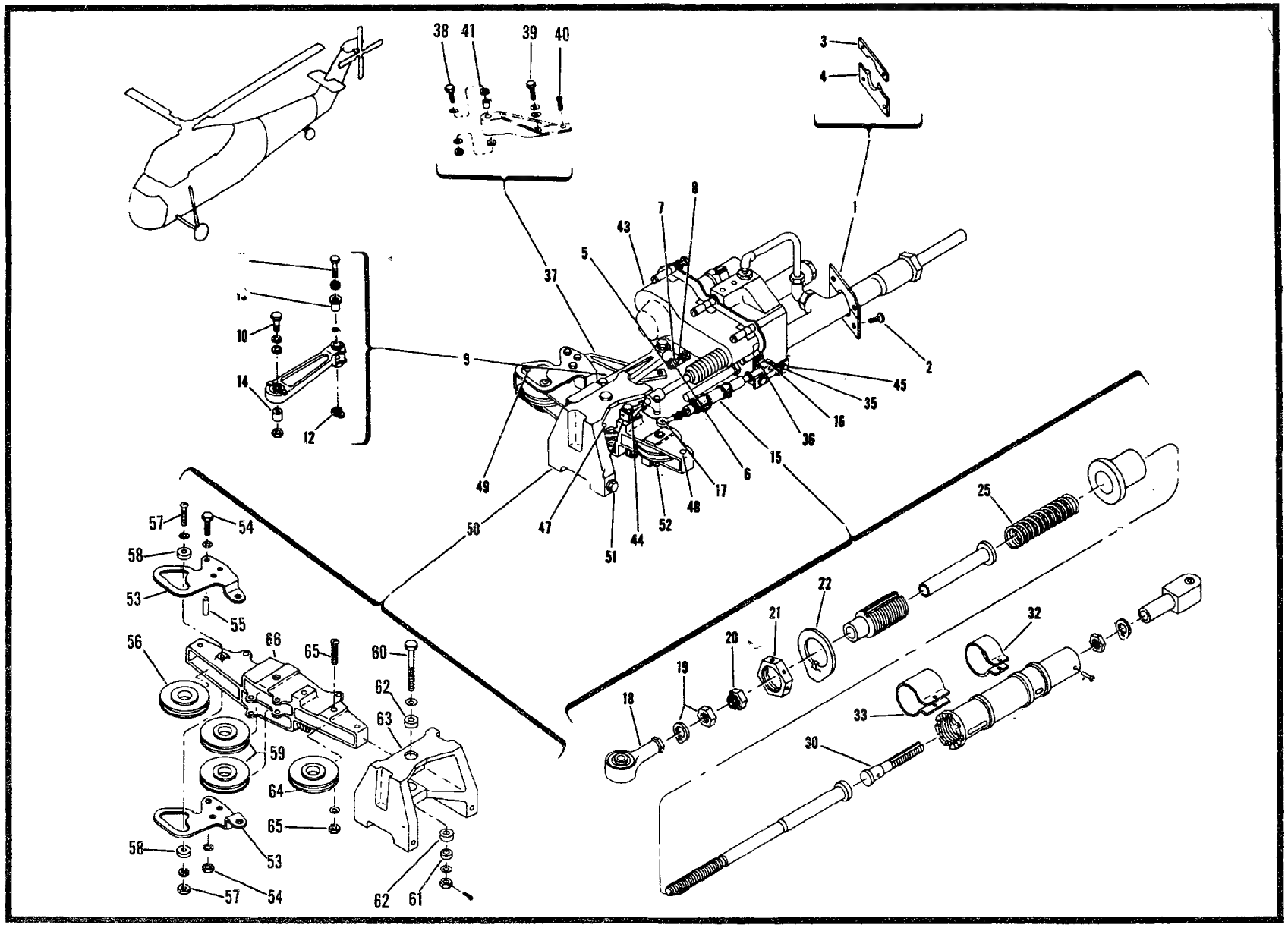

Figure 105. Tail Rotor Servo Unit Installation

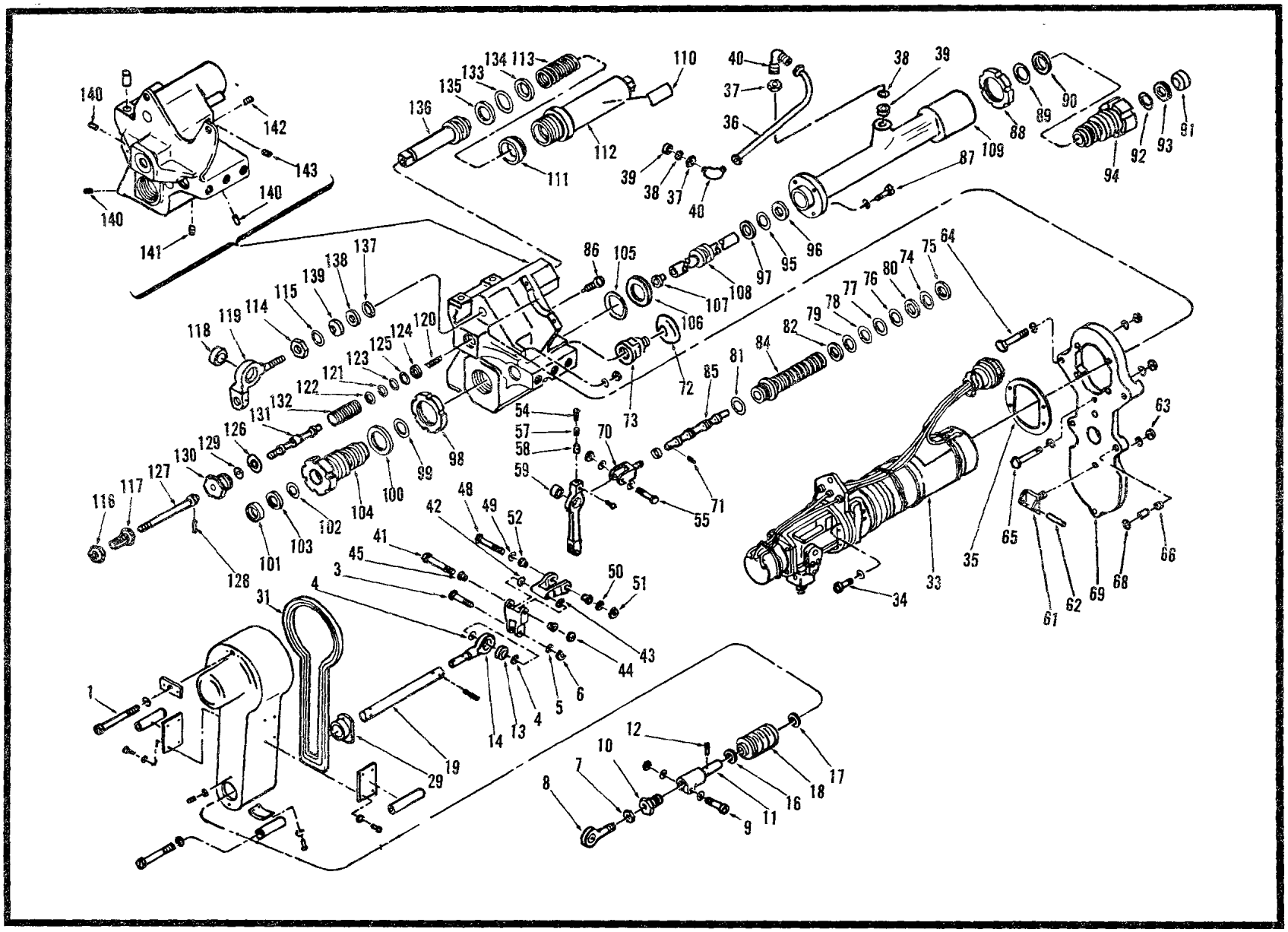

Figure 106. Servo Unit Assembly, Tail Rotor

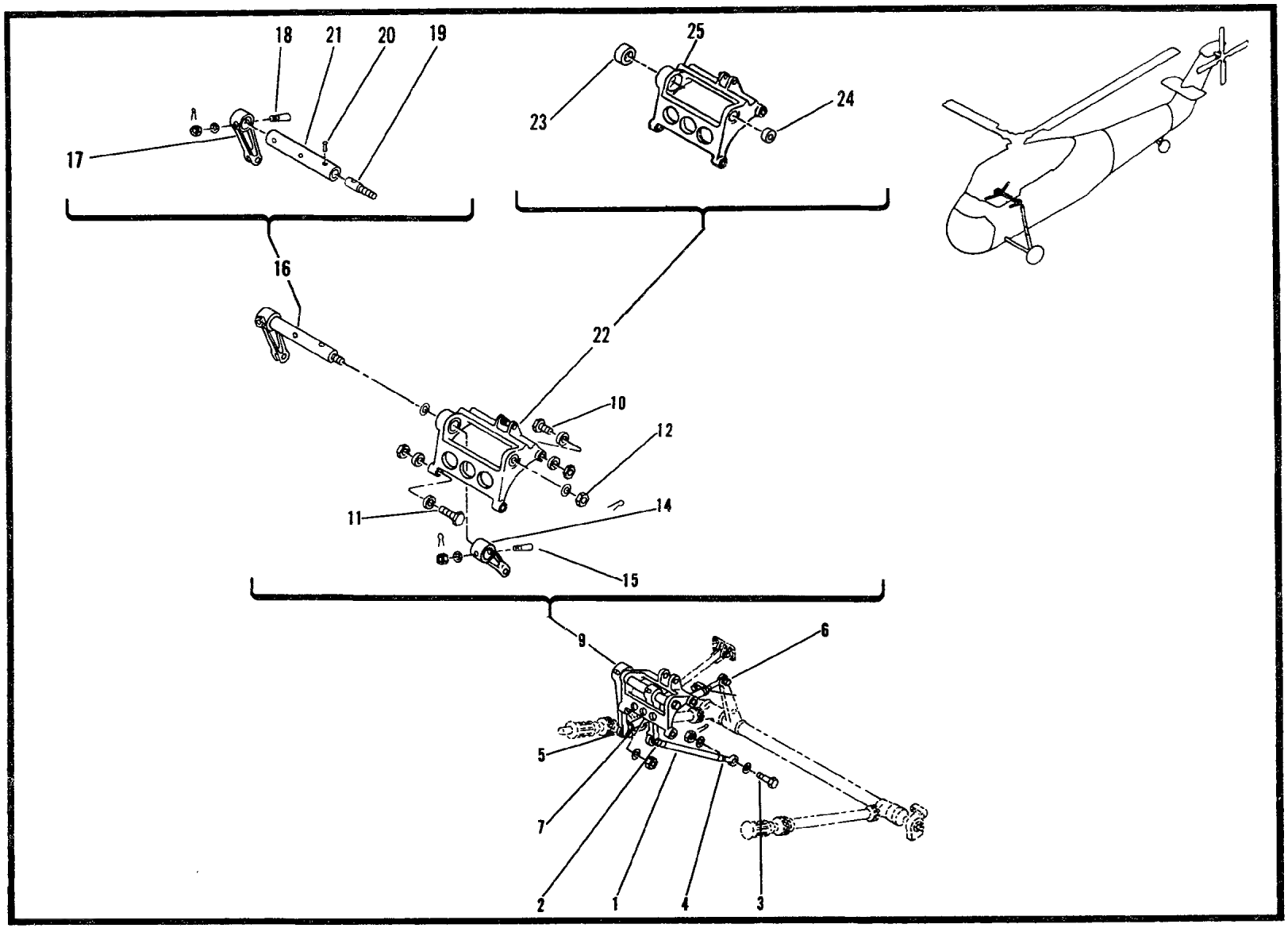

Figure 107. Collective Pitch Controls Installation (Sheet 1 of 2)

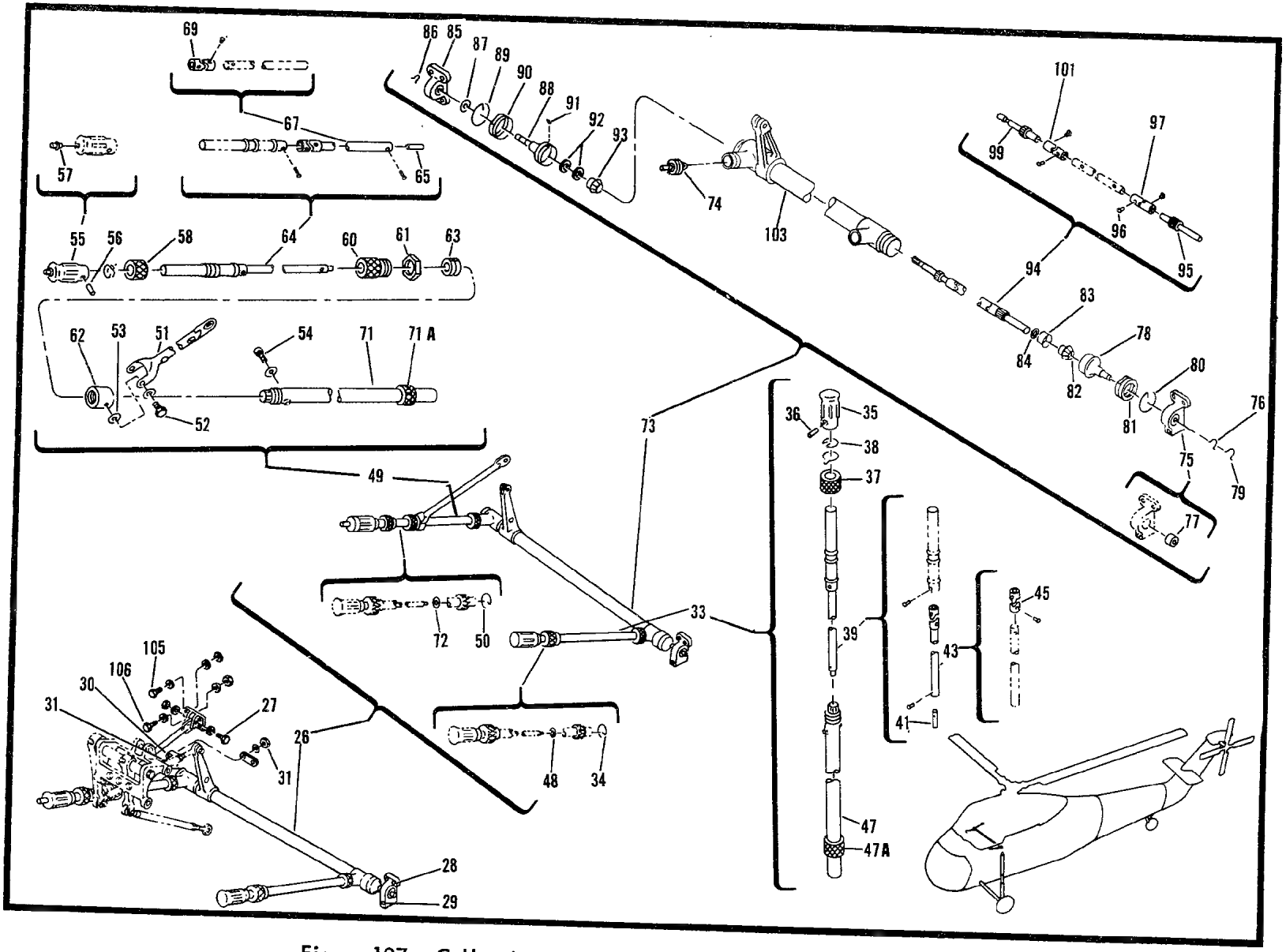

Figure 107. Collective Pitch Controls Installation (Sheet 2 of 2)

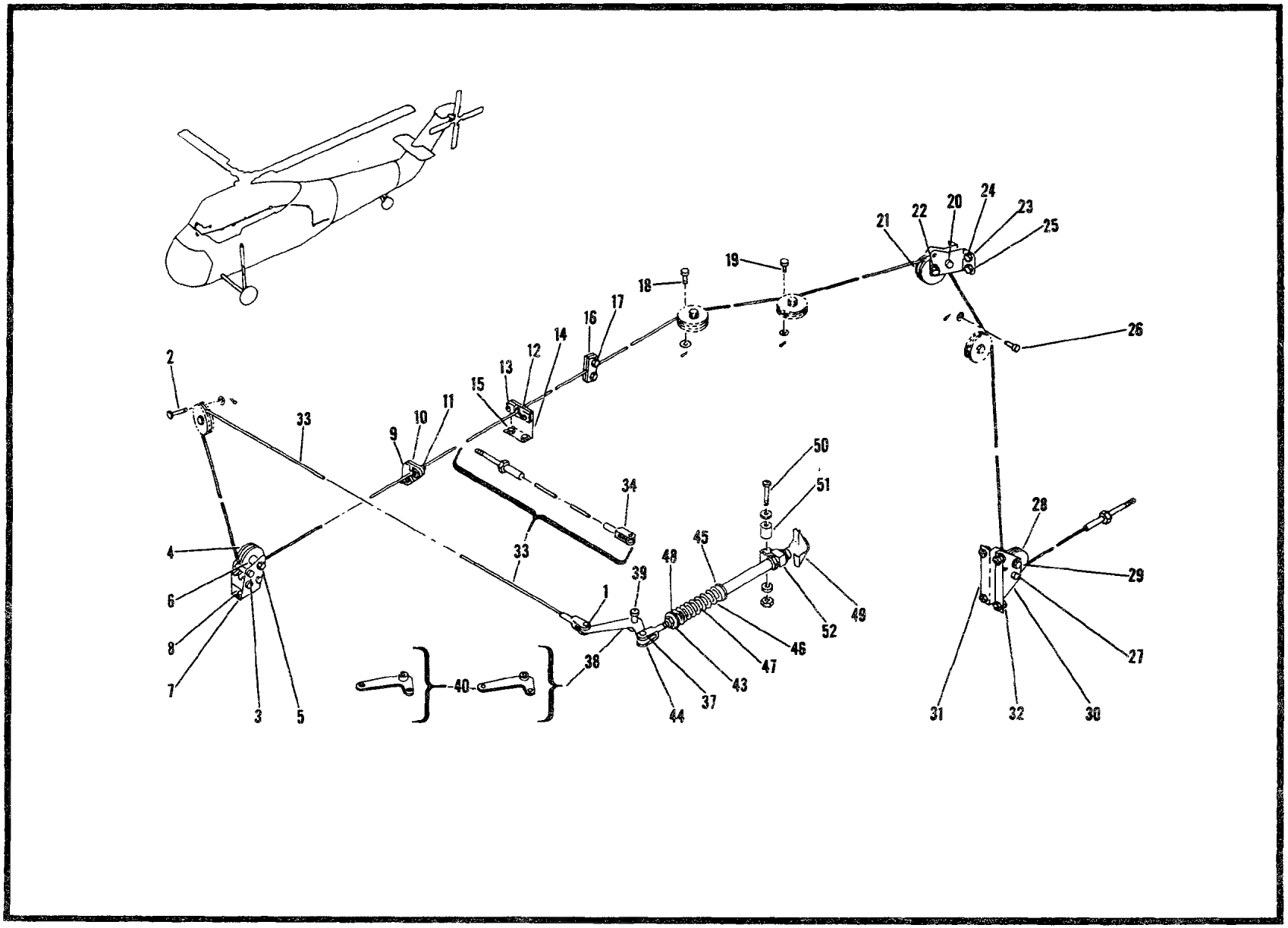

Figure 108. Tail Wheel Lock Controls Installation

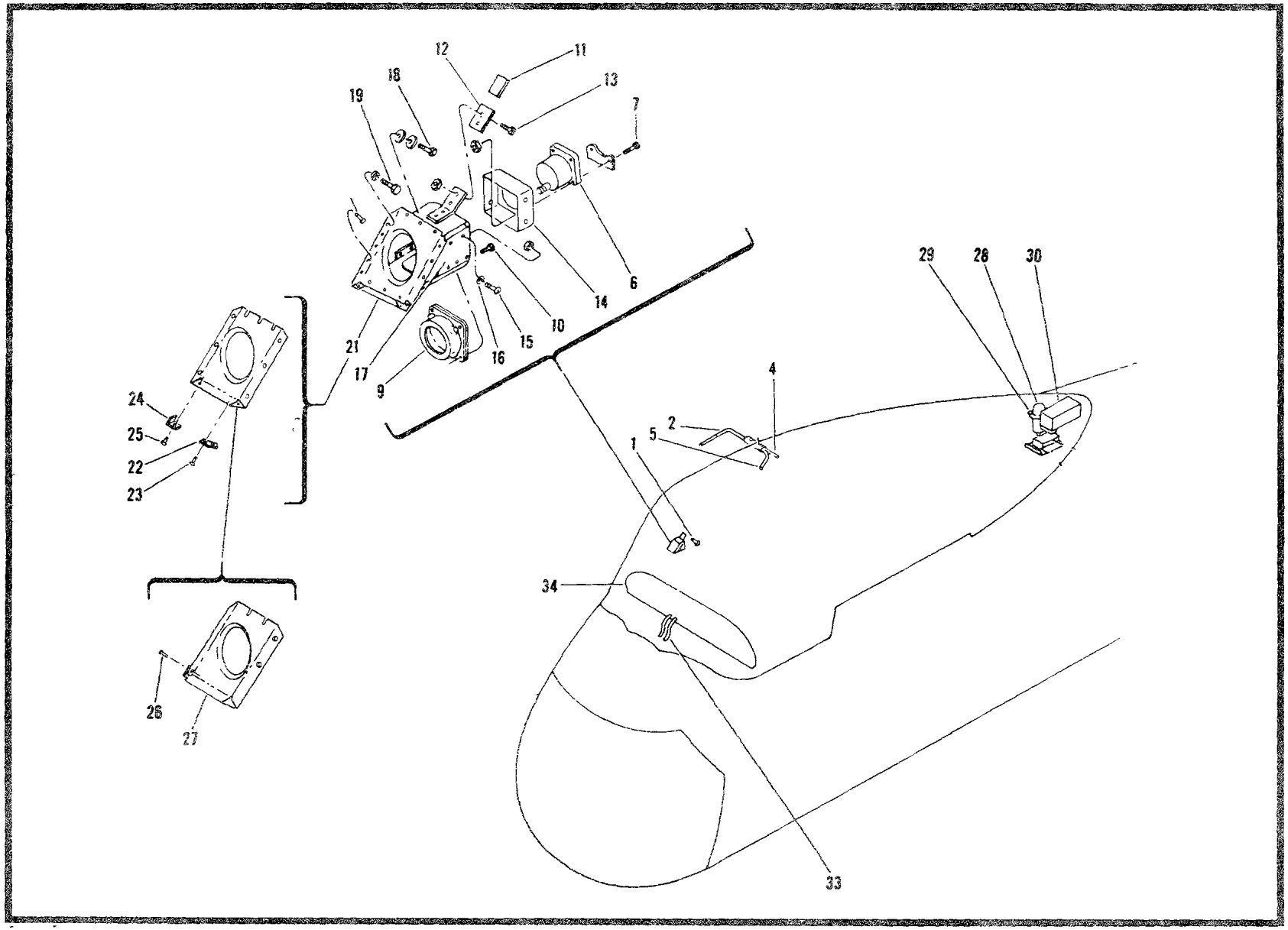

Figure 109. Forward Flight and Engine Instrument Installation

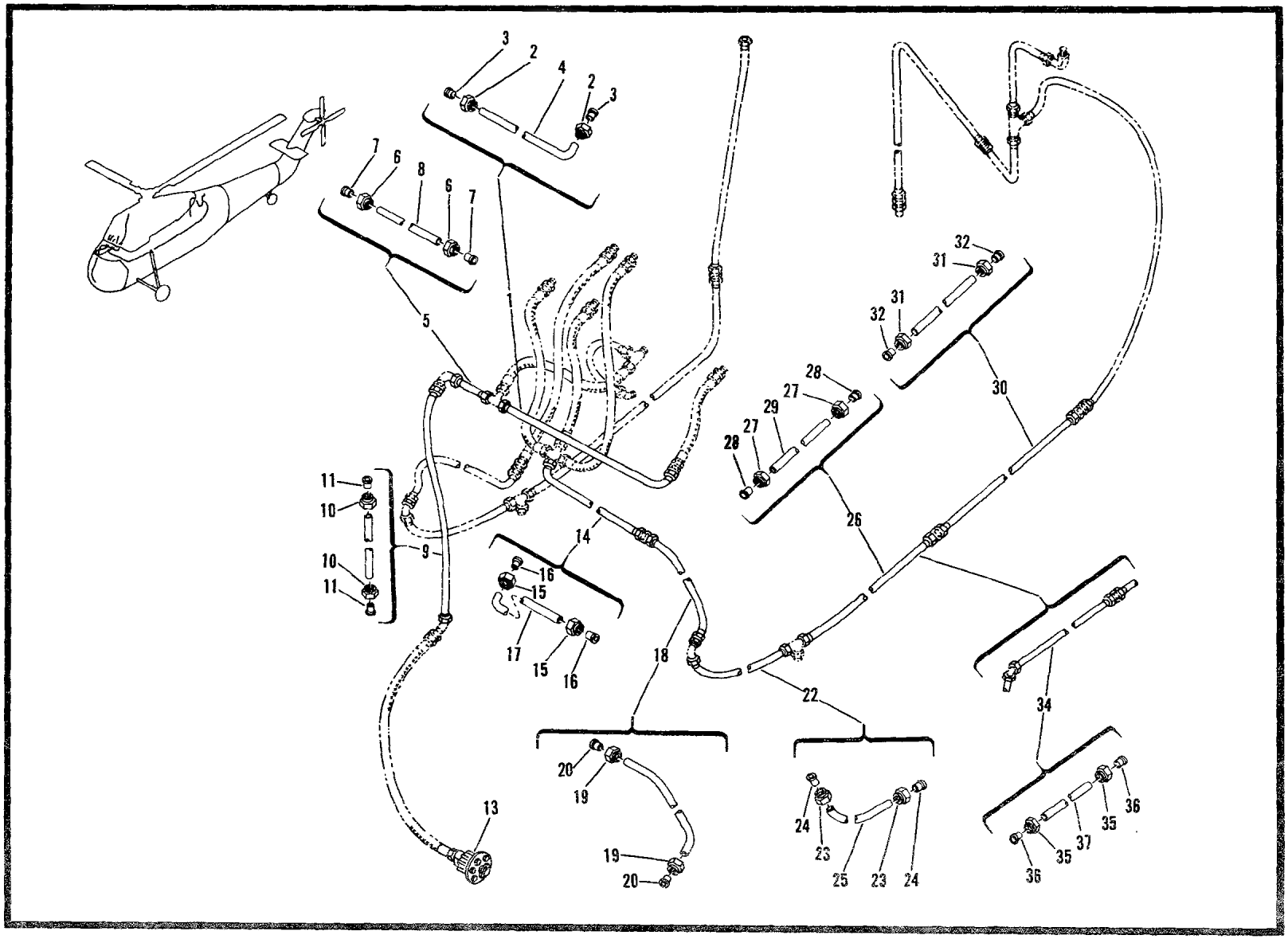

Figure 11C. Flight and Engine Instrument Piping Installation (USBL EFF 53-4475 thru 54-2999) Sheet 1 of 2)

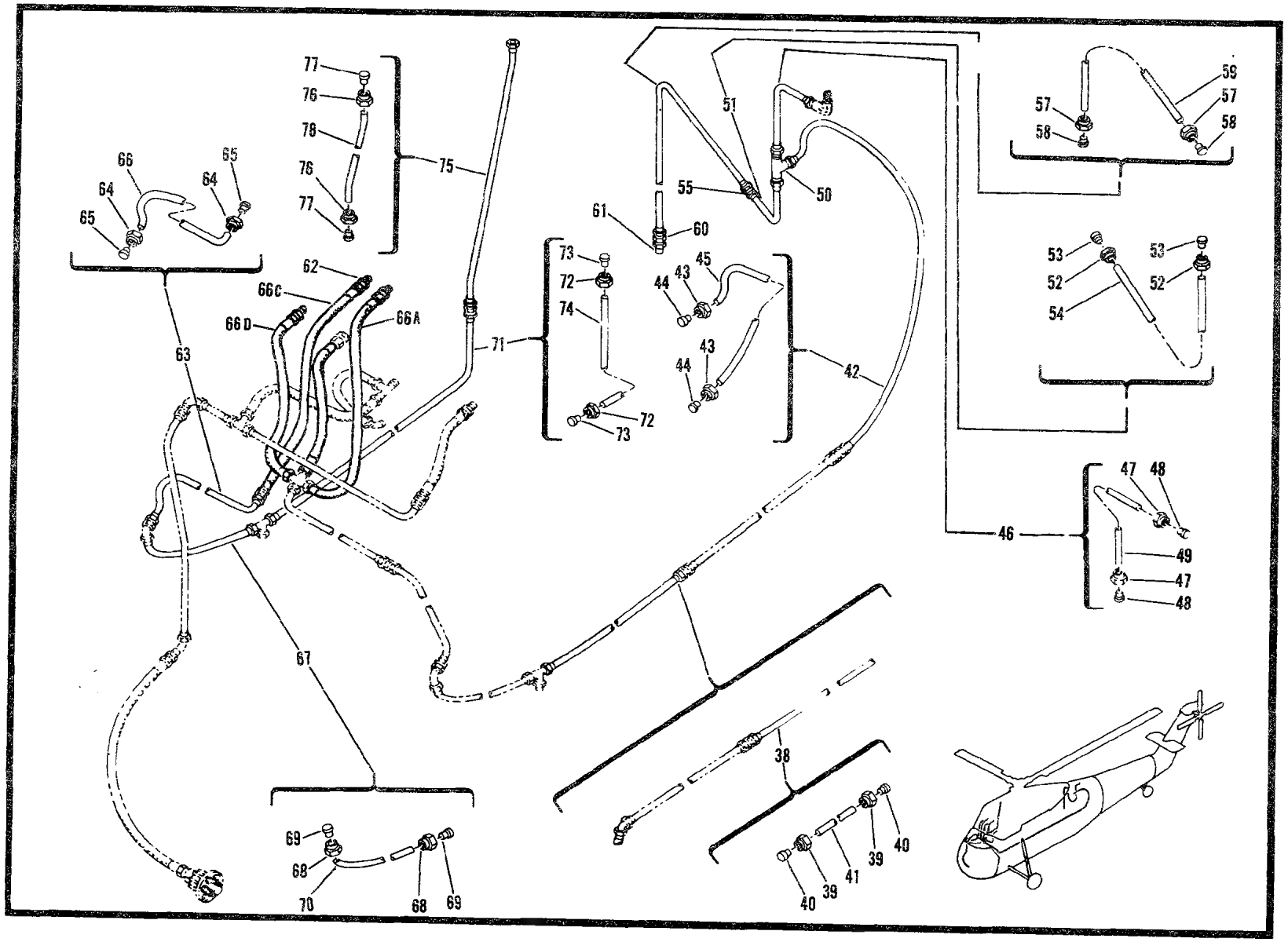

Figure 110. Flight and Engine Instrument Piping Installation (USBL EFF 53-4475 thru 54-2999)(Sheet 2 of 2)

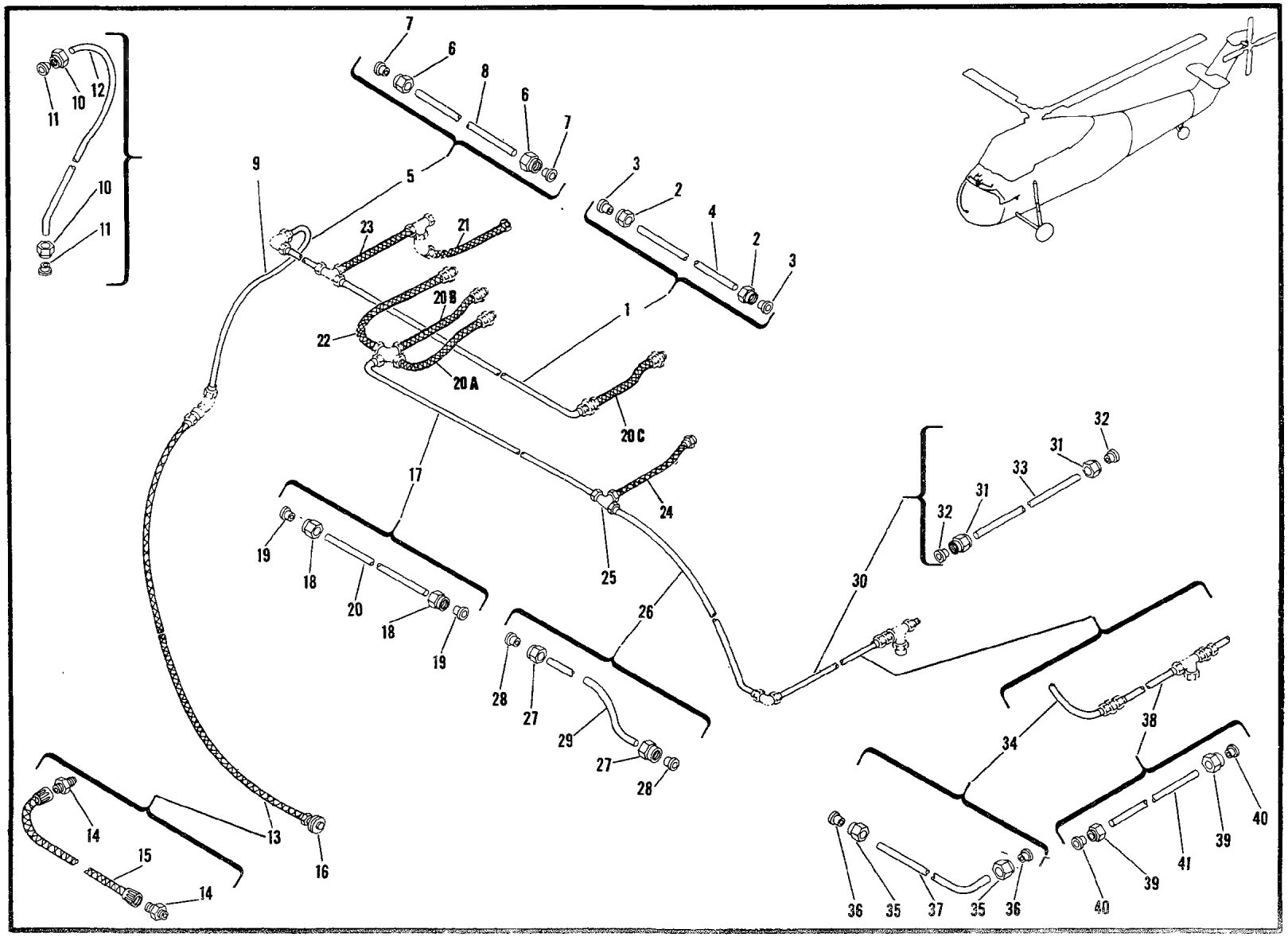

Figure 111. Flight and Engine Instrument Piping Installation (USBL EFF 54-3000 and Subsequent) (Sheet 1 of 2)

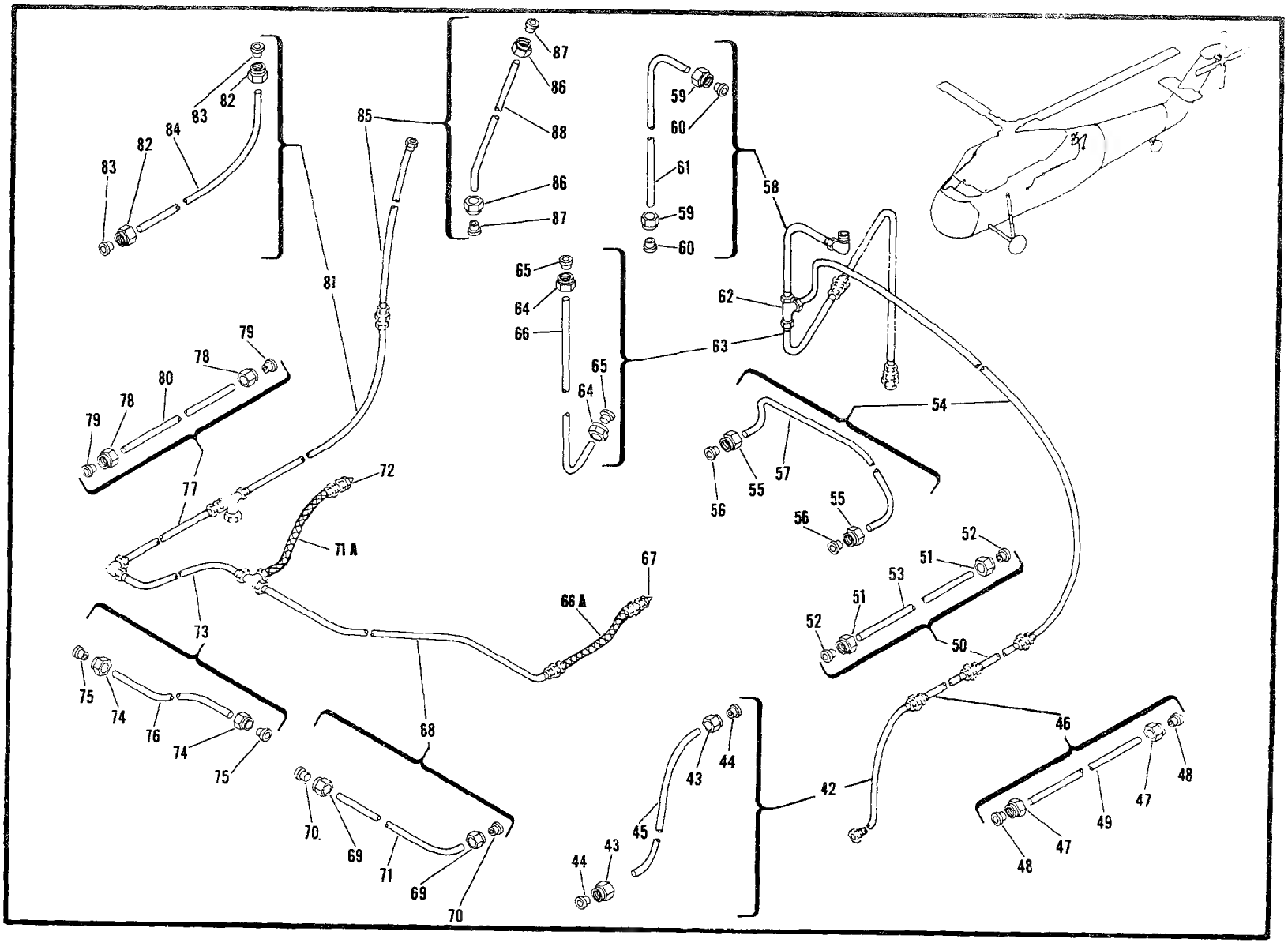

Figure 111. Flight and Engine Instrument Piping Installation (USBL EFF 54-3000 and Subsequent) (Sheet 2 of 2)

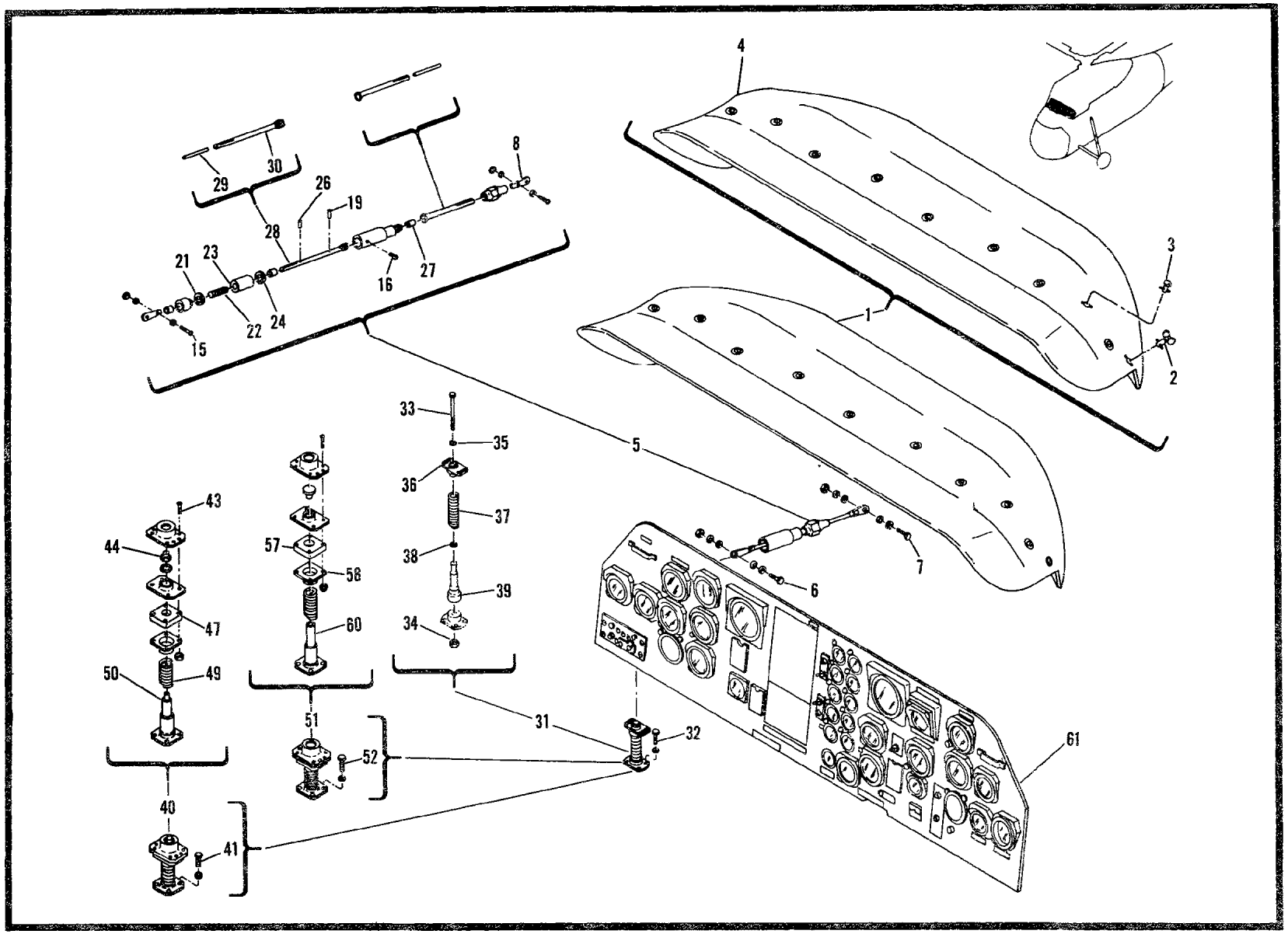

Figure 112. Flight and Engine Instrument Panel Installation

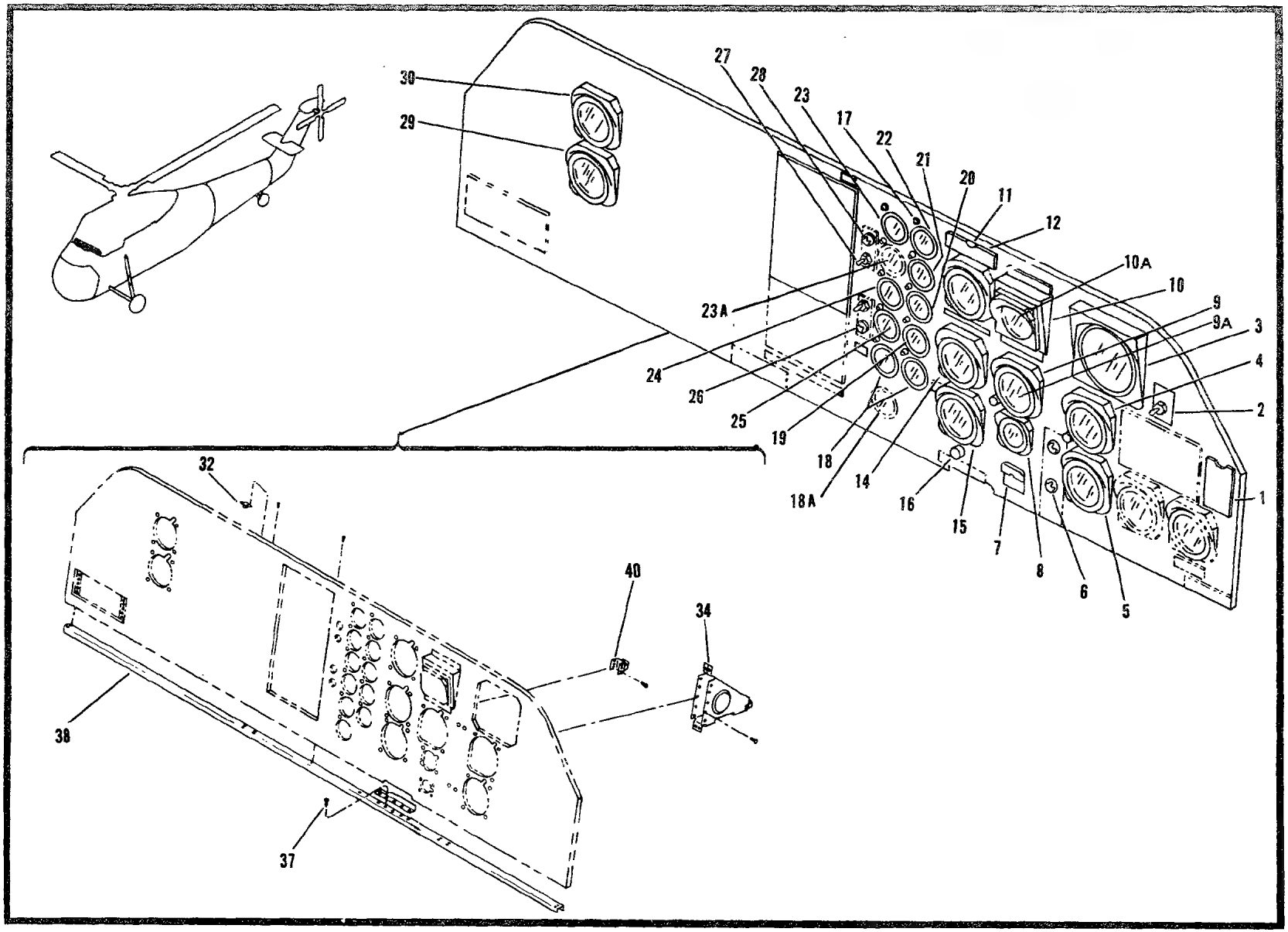

Figure 113. Panel Assembly-Flight and Engine Instrument
(USBL EFF 53-4475 thru 54-2999)

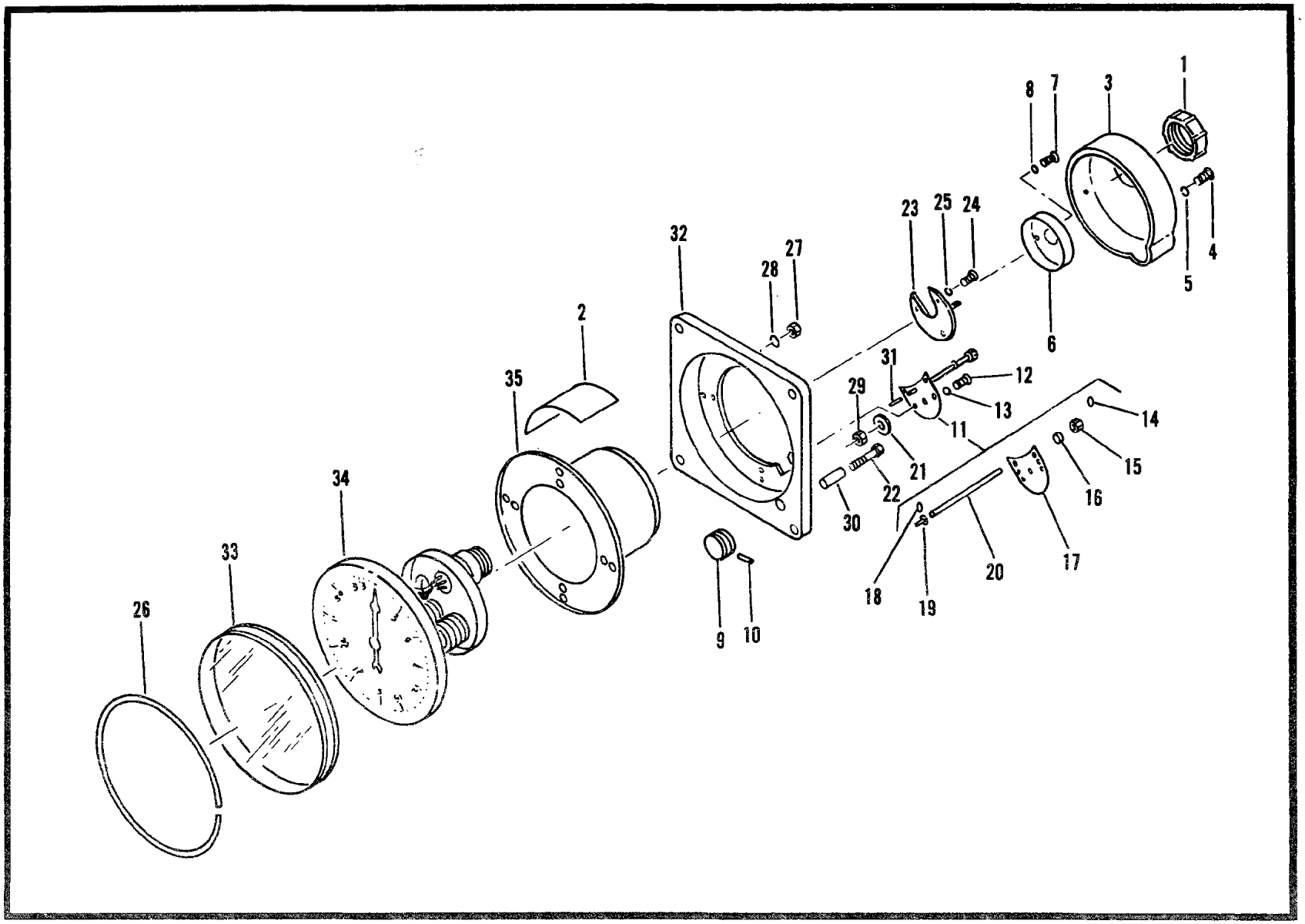

Figure 113A. Indicator, Induction, Compass (Sheet 1 of 3)

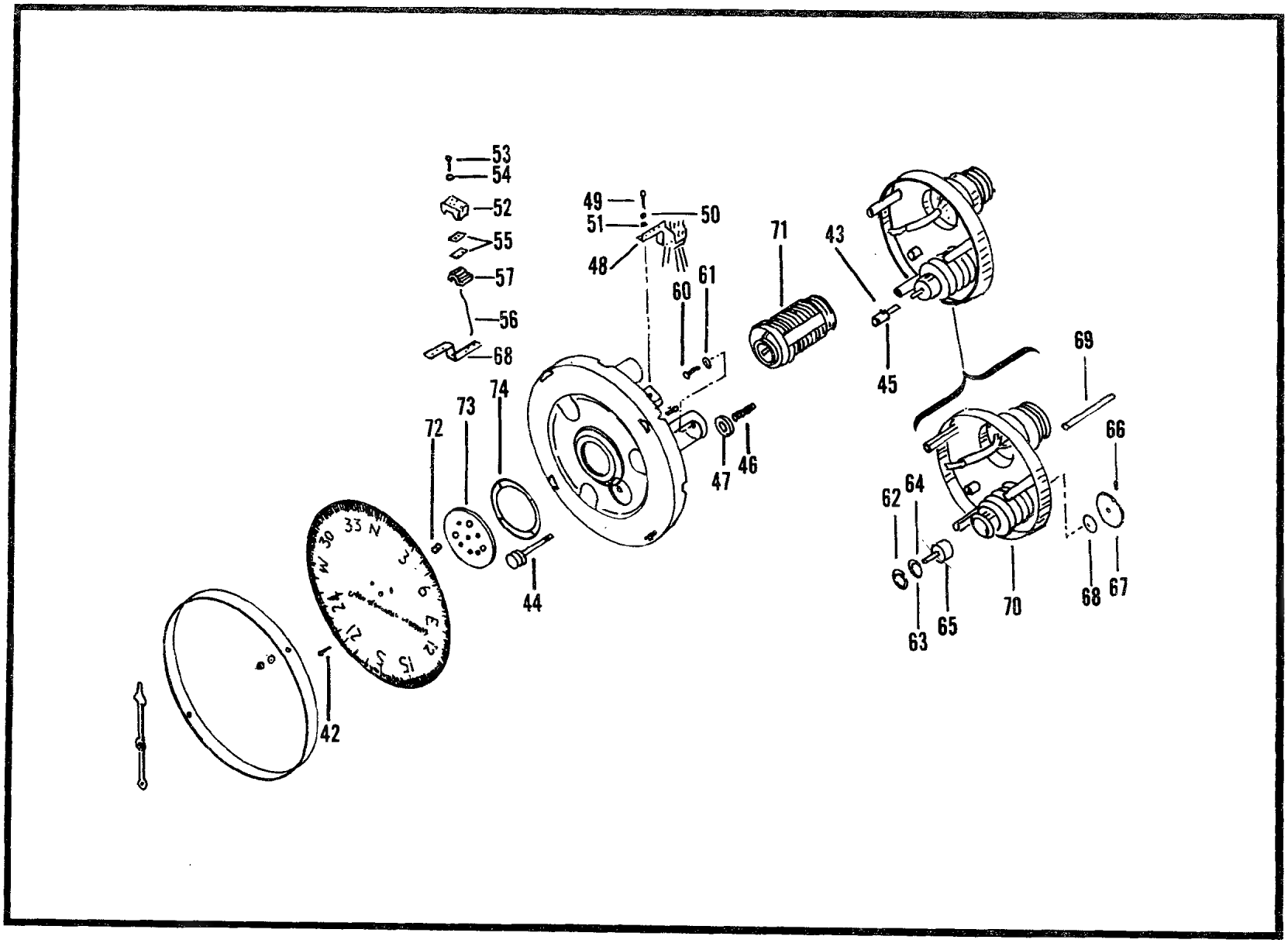

Figure 113A. Indicator, Induction Compass (Mechanism Assembly) (Sheet 2 of 3)

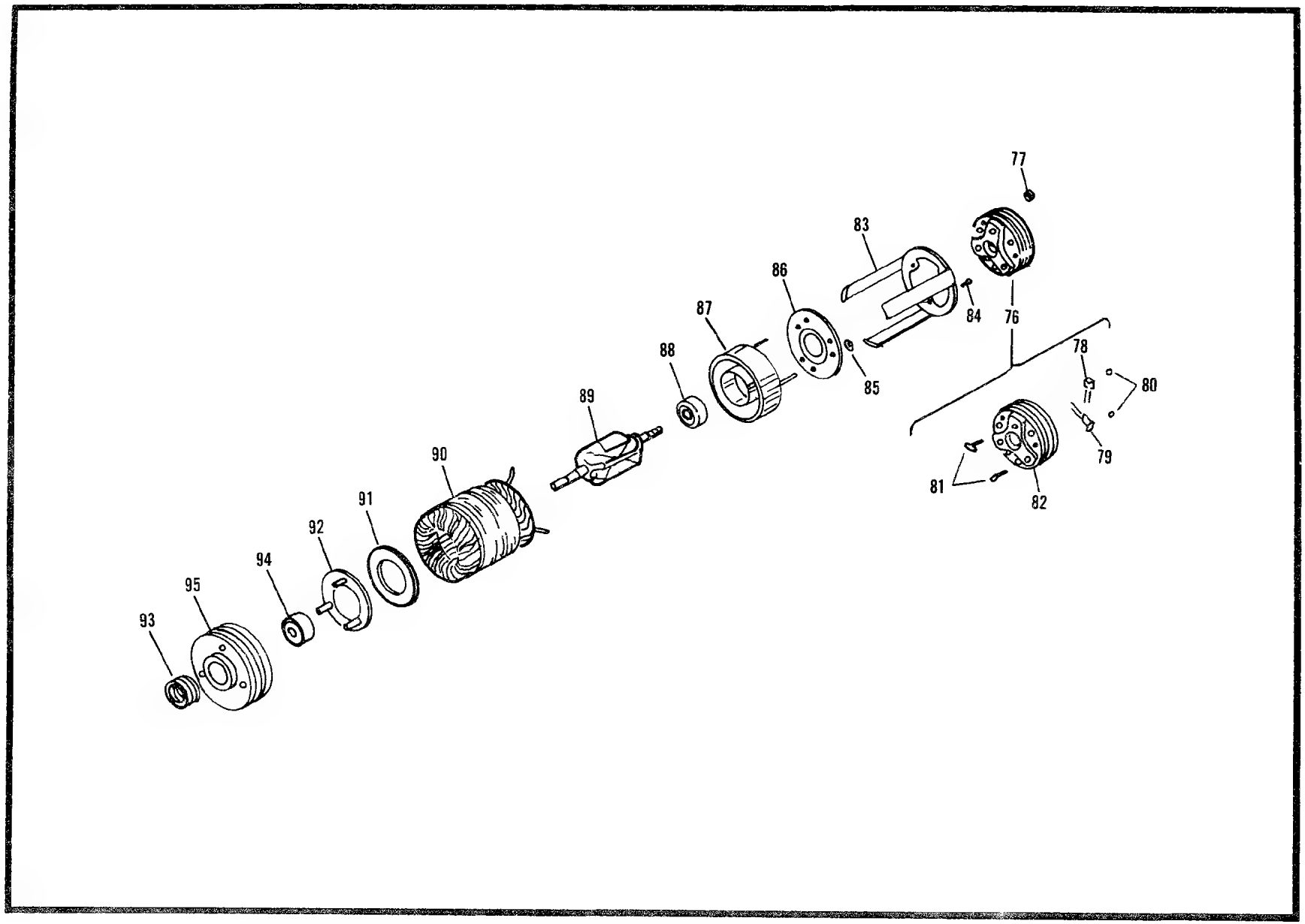

Figure 113A. Indicator, Induction, Compass (Synchro Receiver) (Sheet 3 of 3)

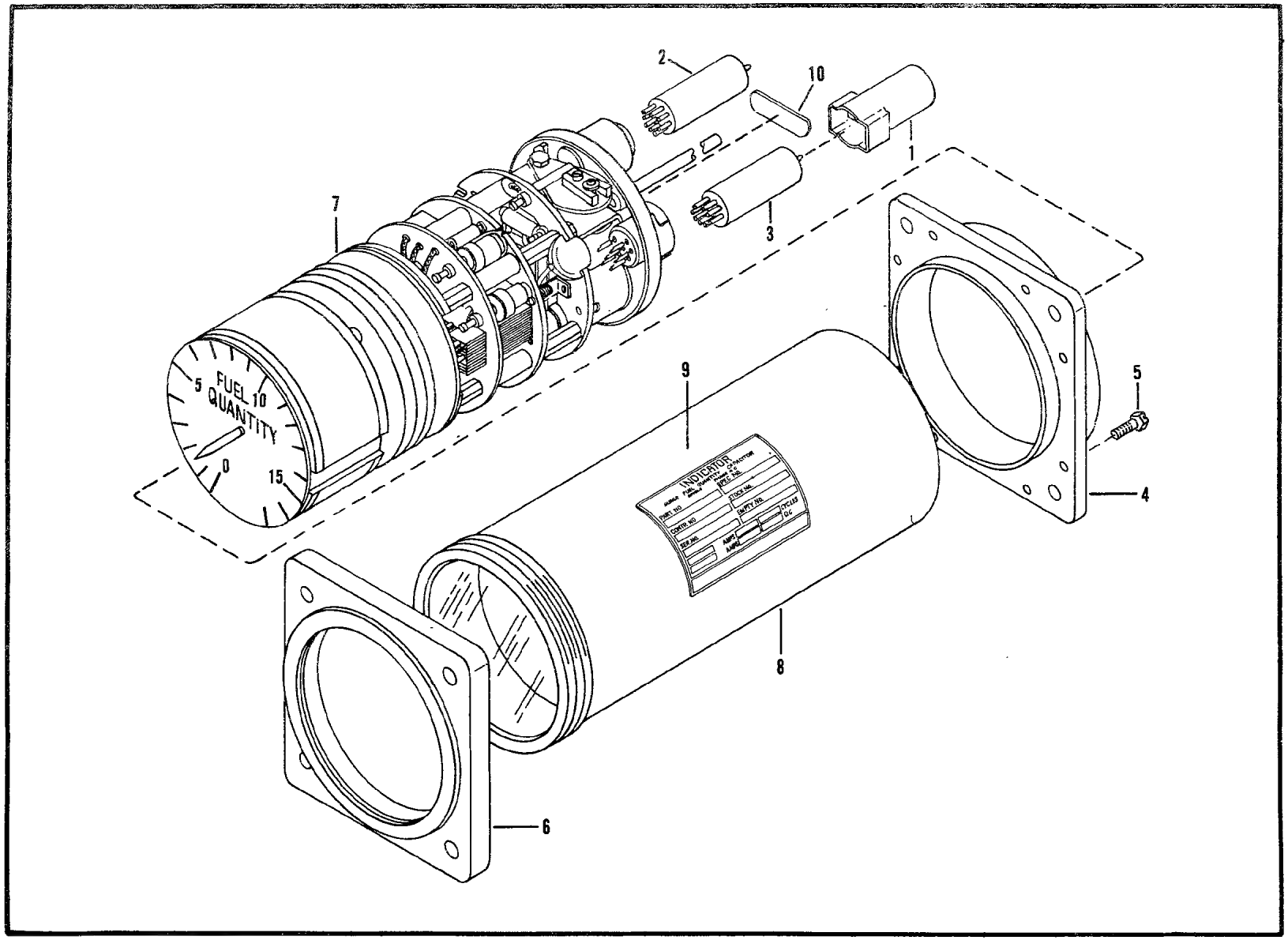

Figure 113B. Indicator, Liquid Quantity (Sheet 1 of 5)

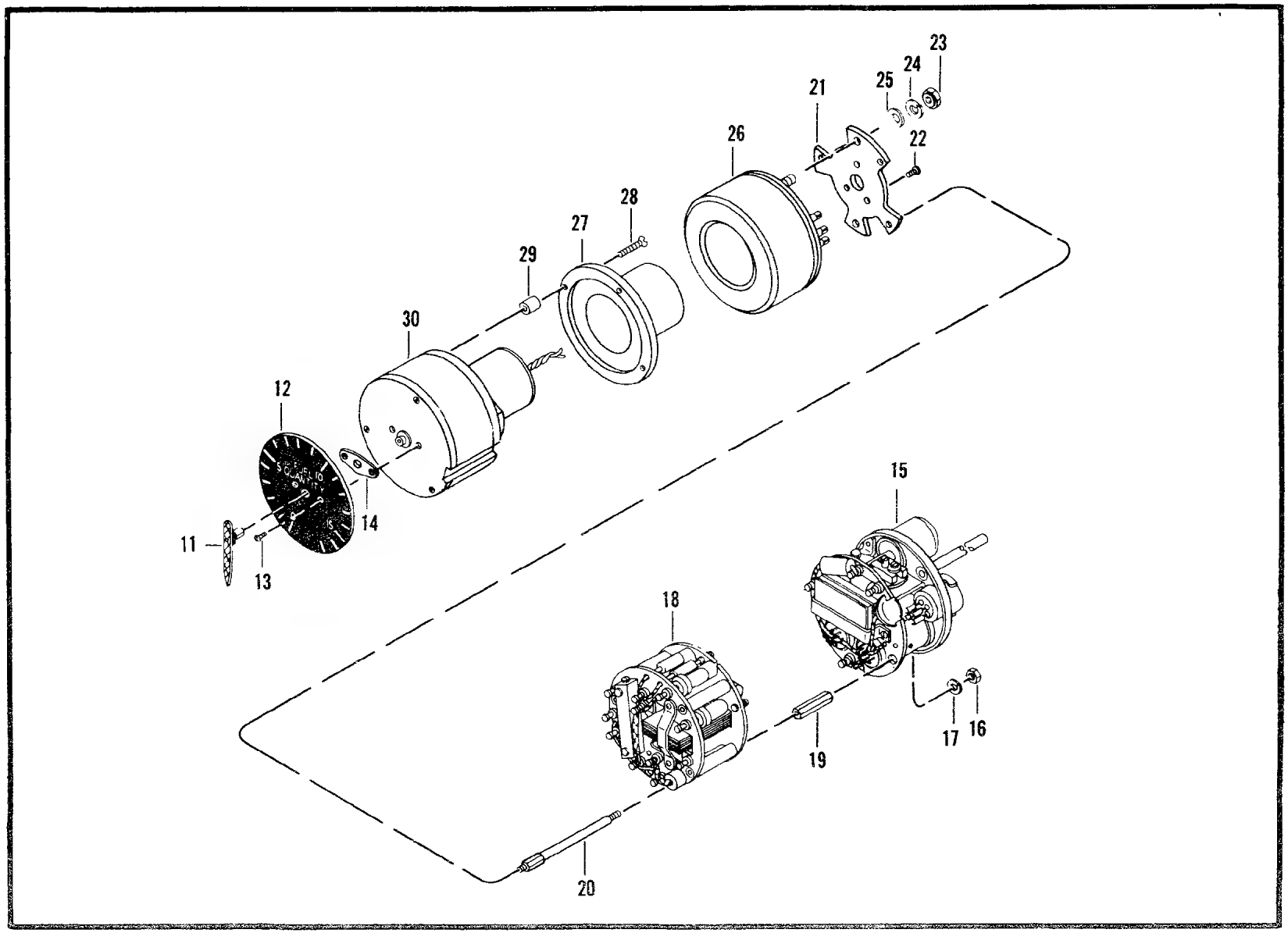

Figure 113B. Indicator, Liquid Quantity (Mechanism Assembly) (Sheet 2 of 5)

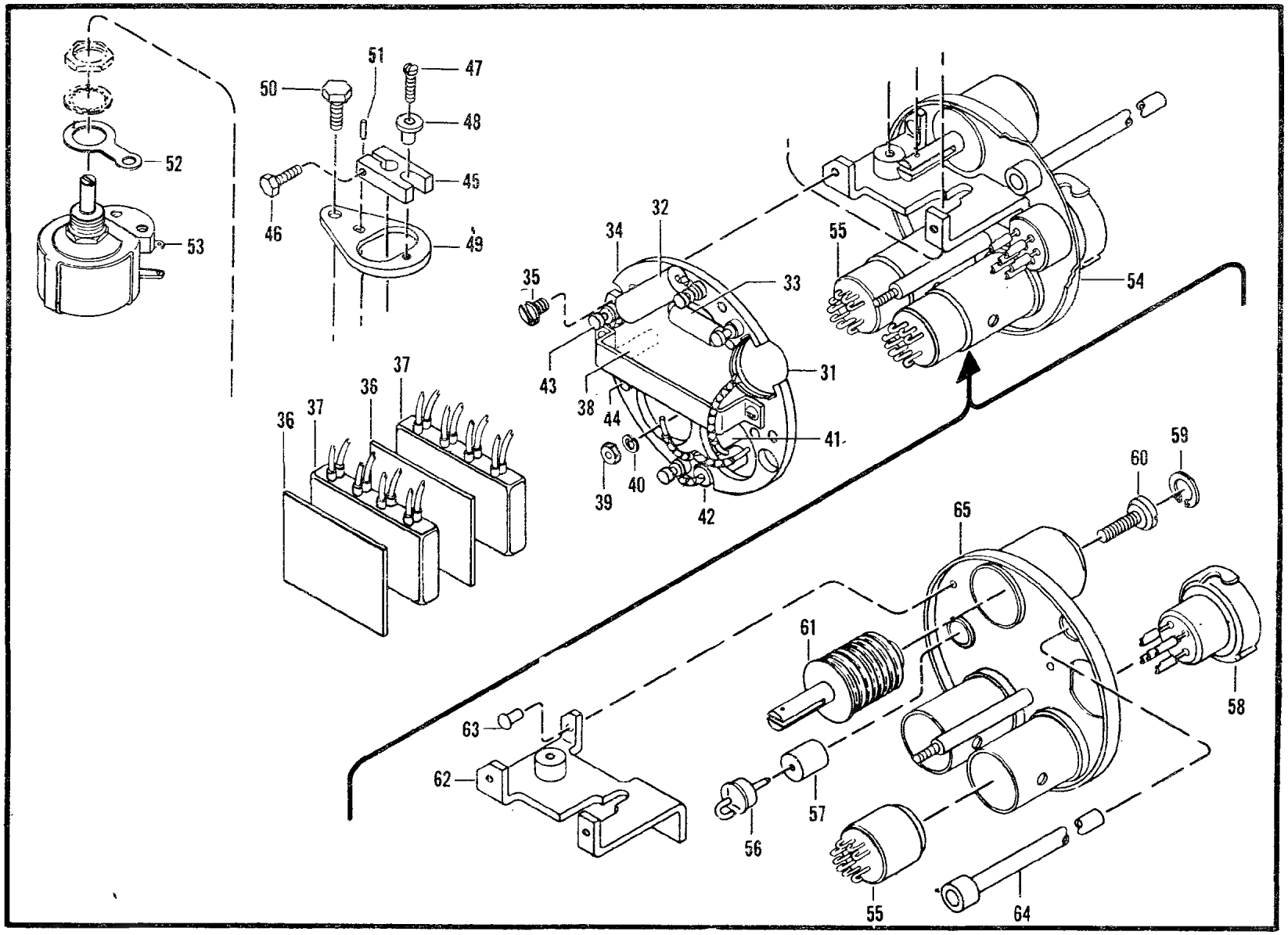

Figure 113B. Indicator, Liquid Quantity (Backplate) (Sheet 3 of 5)

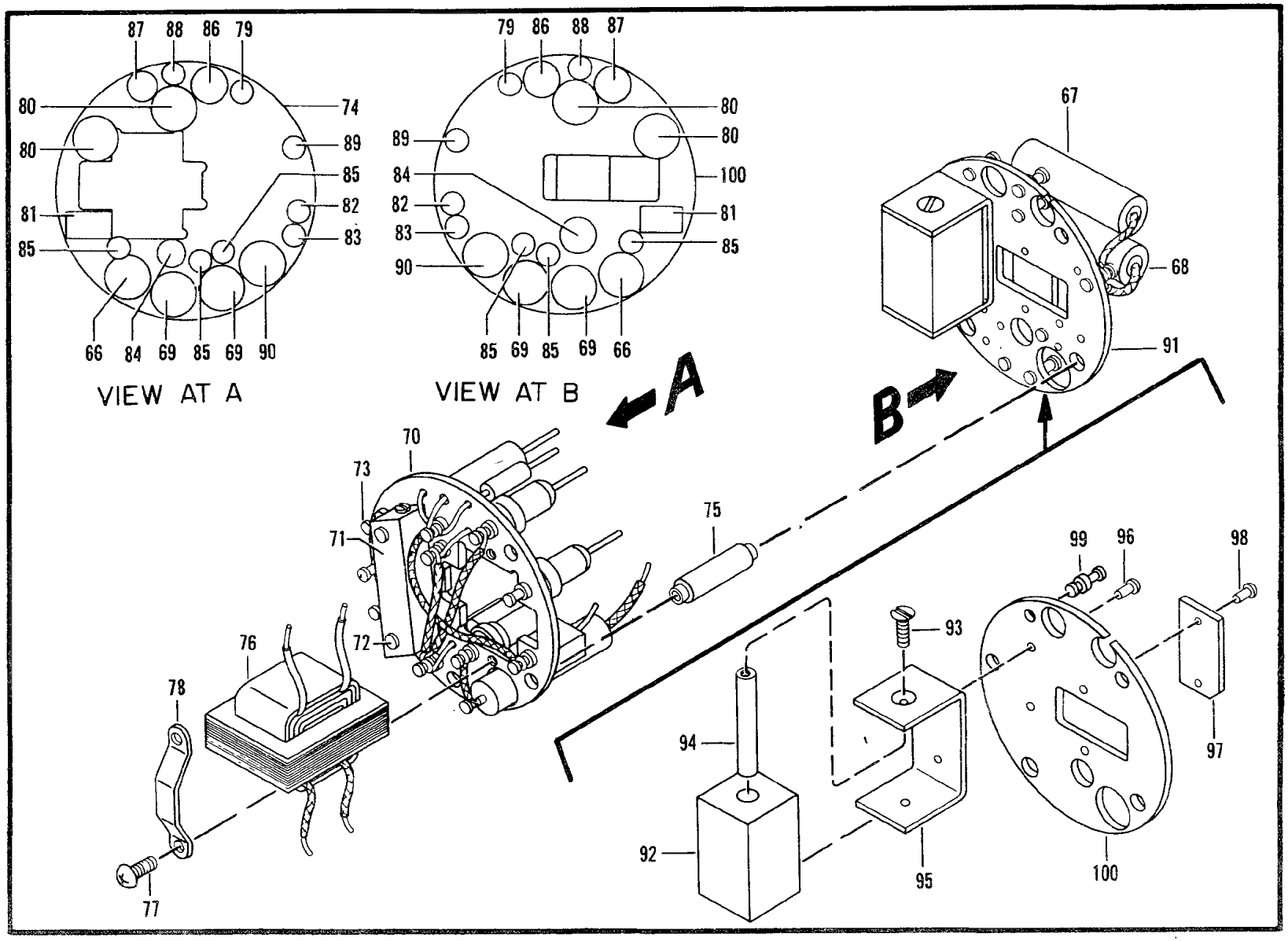

Figure 113B. Indicator, Liquid Quantity (Bulkhead) (Sheet 4 of 5)

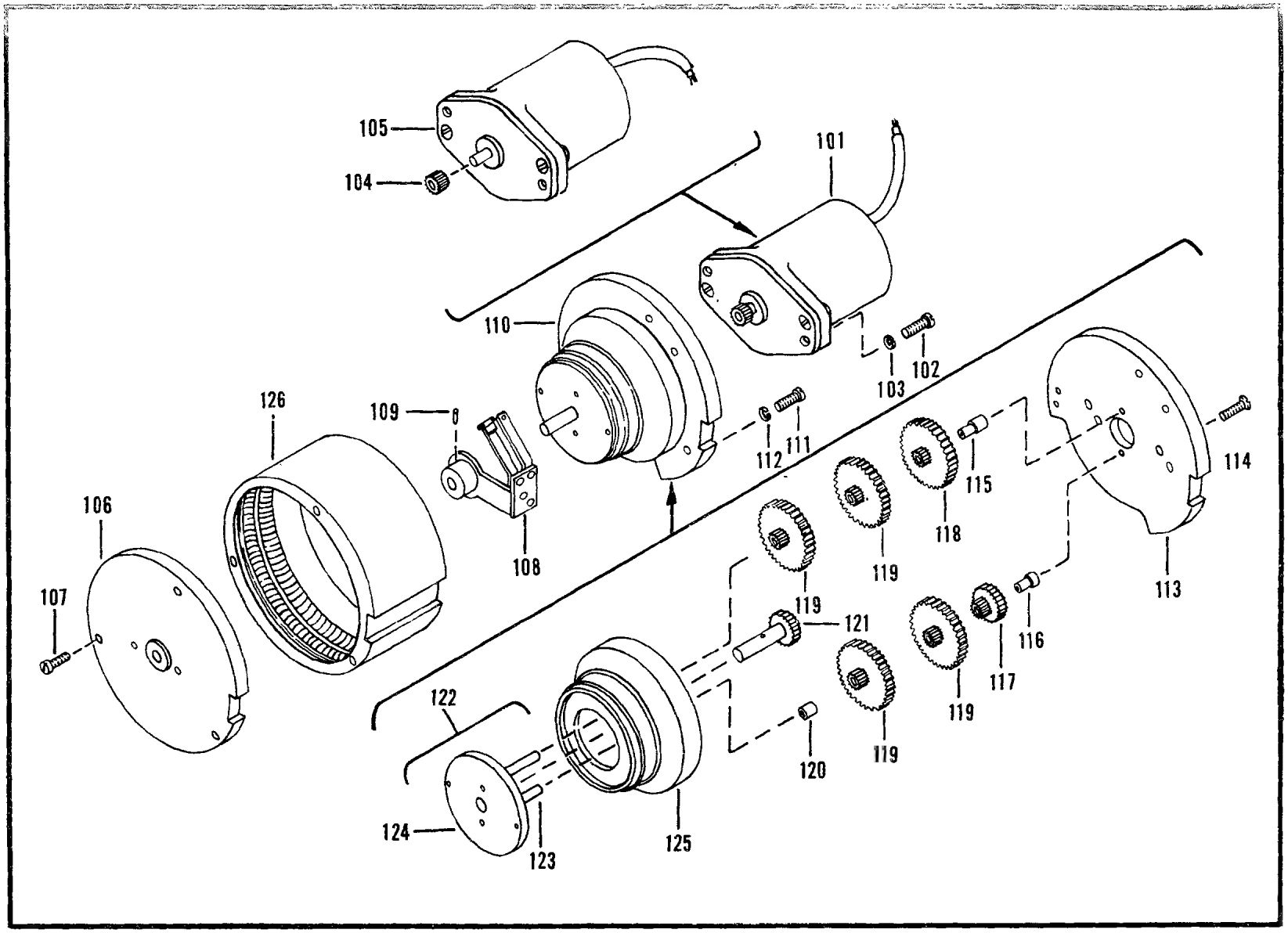

Figure 113B. Indicator, Liquid Quantity (Control Assembly) (Sheet 5 of 5)

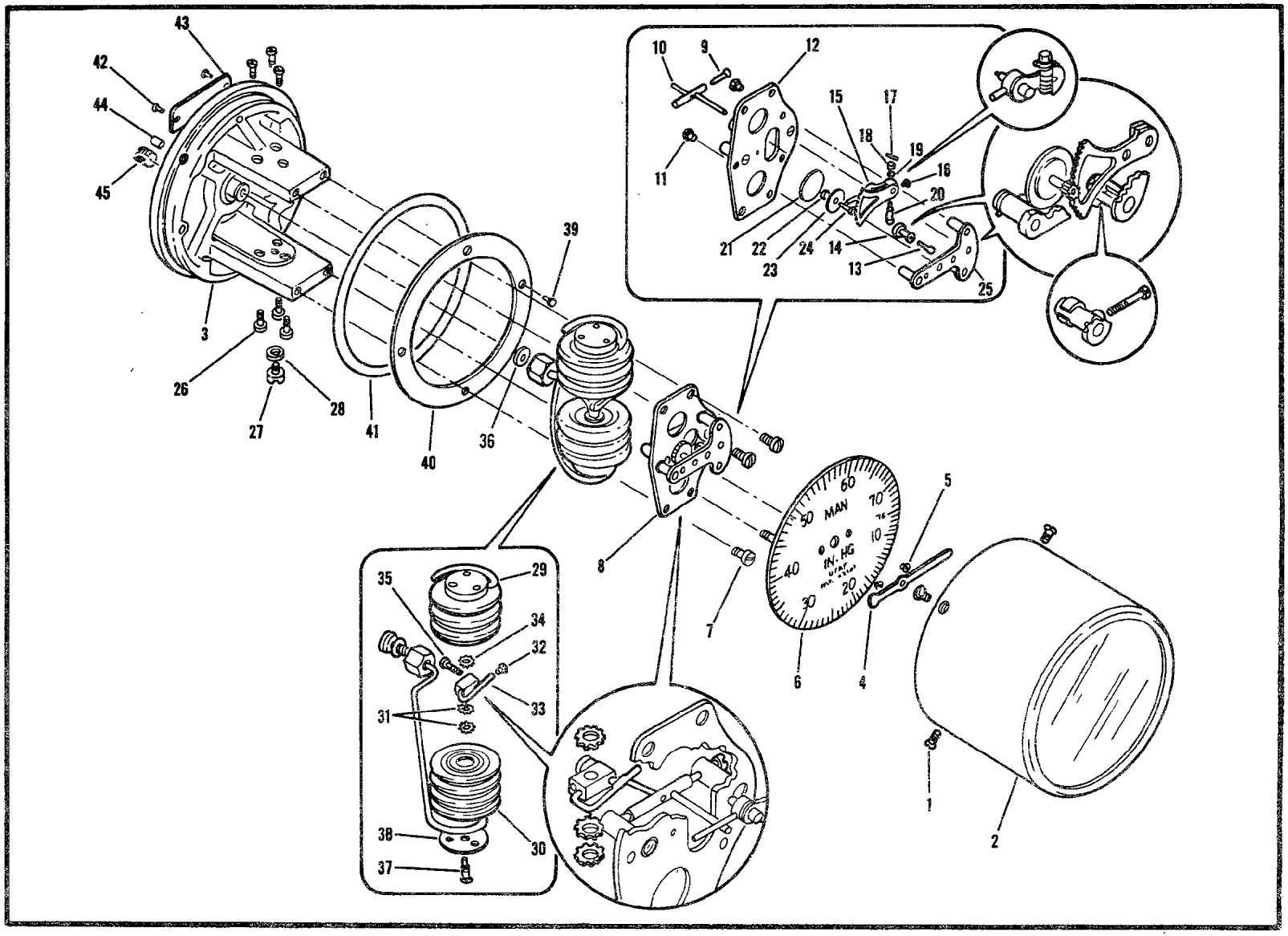

Figure 113C. Gage, Absolute Pressure, Dial Indicating
Figure 113D Not Used In TM55-1520-202-35P

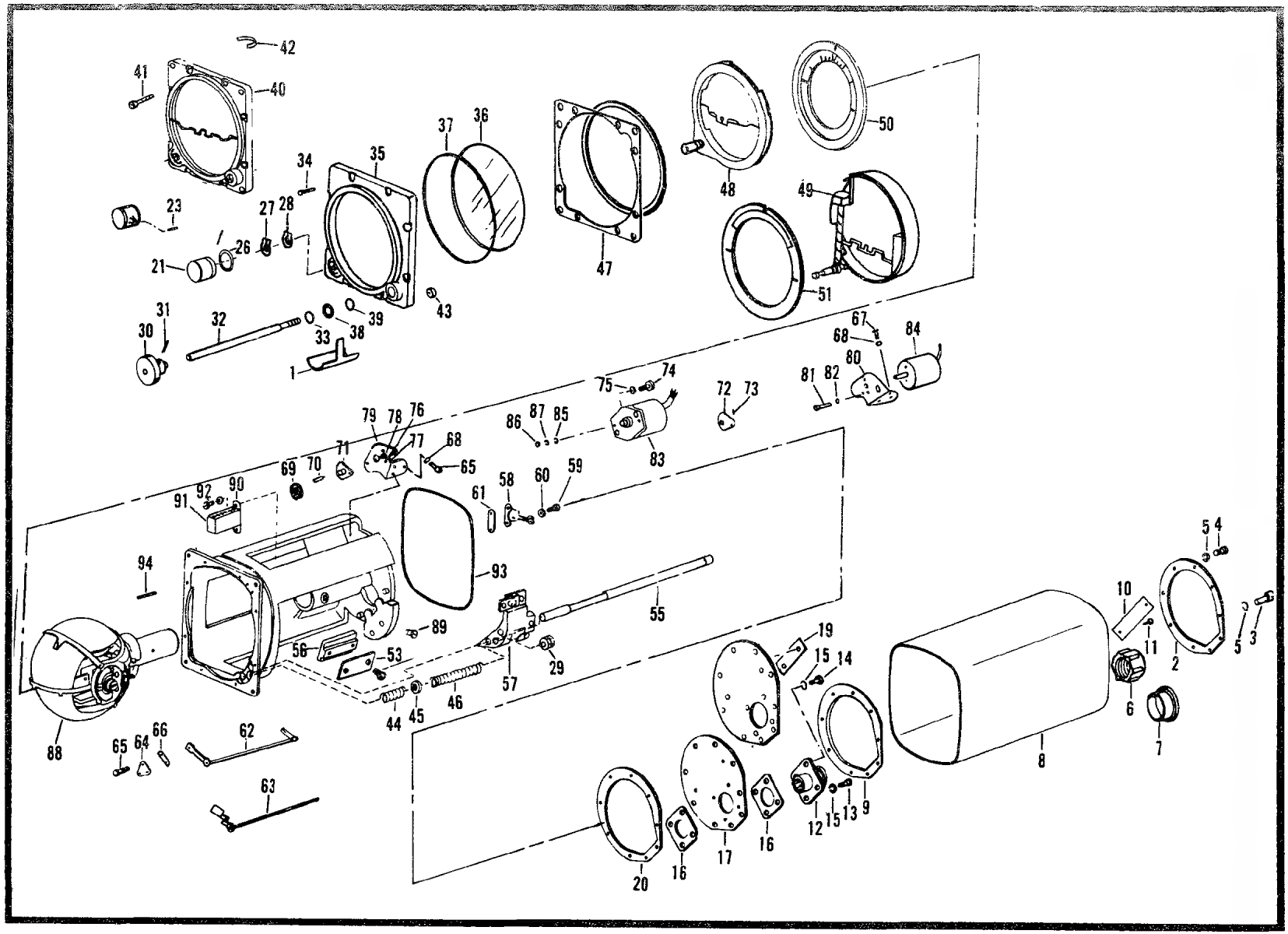

Figure 113E. Indicator, Attitude (Sheet 1 of 10)

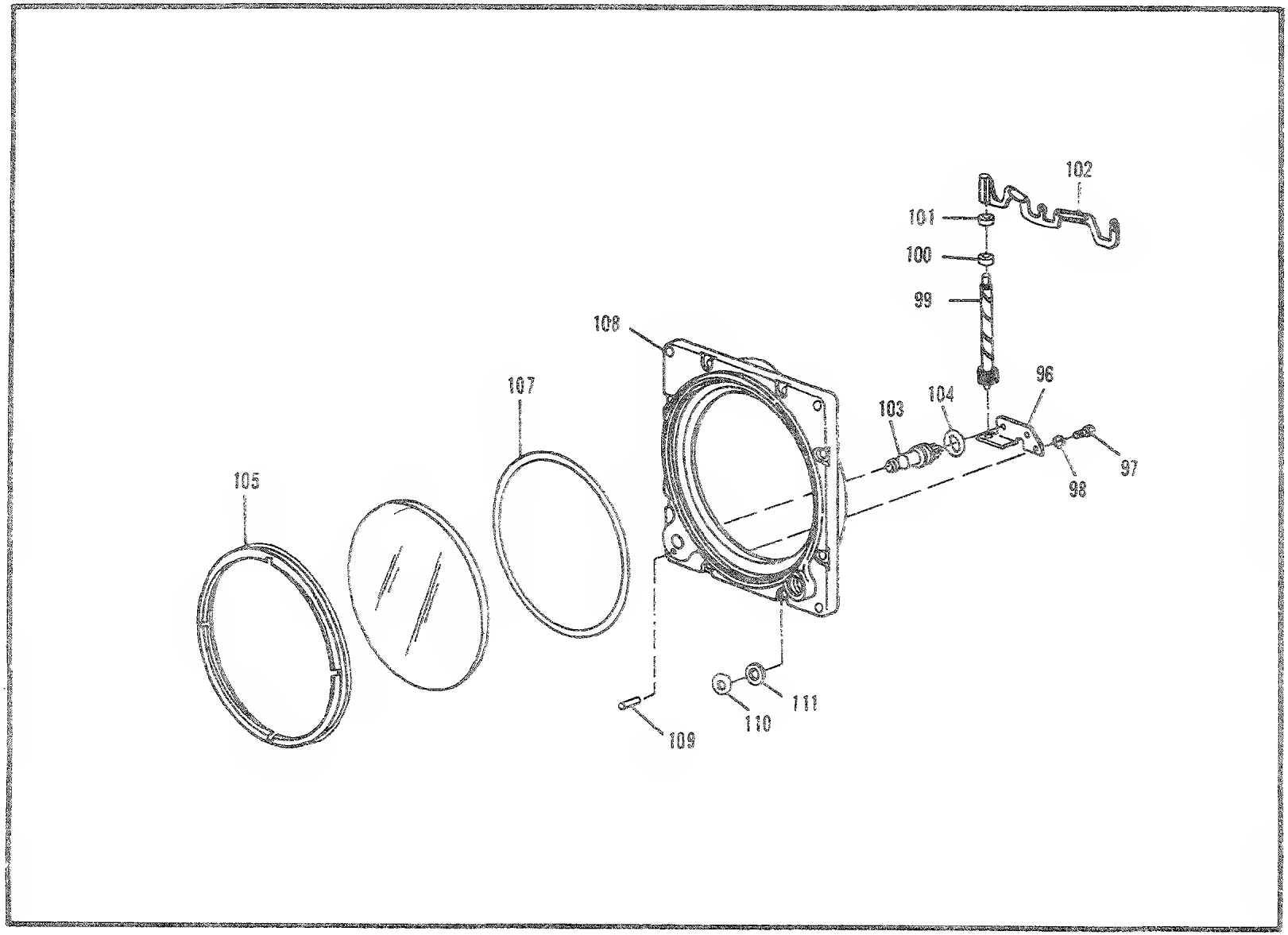

Figure 113E. Indicator, Attitude (Bezel Assembly)(Sheet 2 of 10)

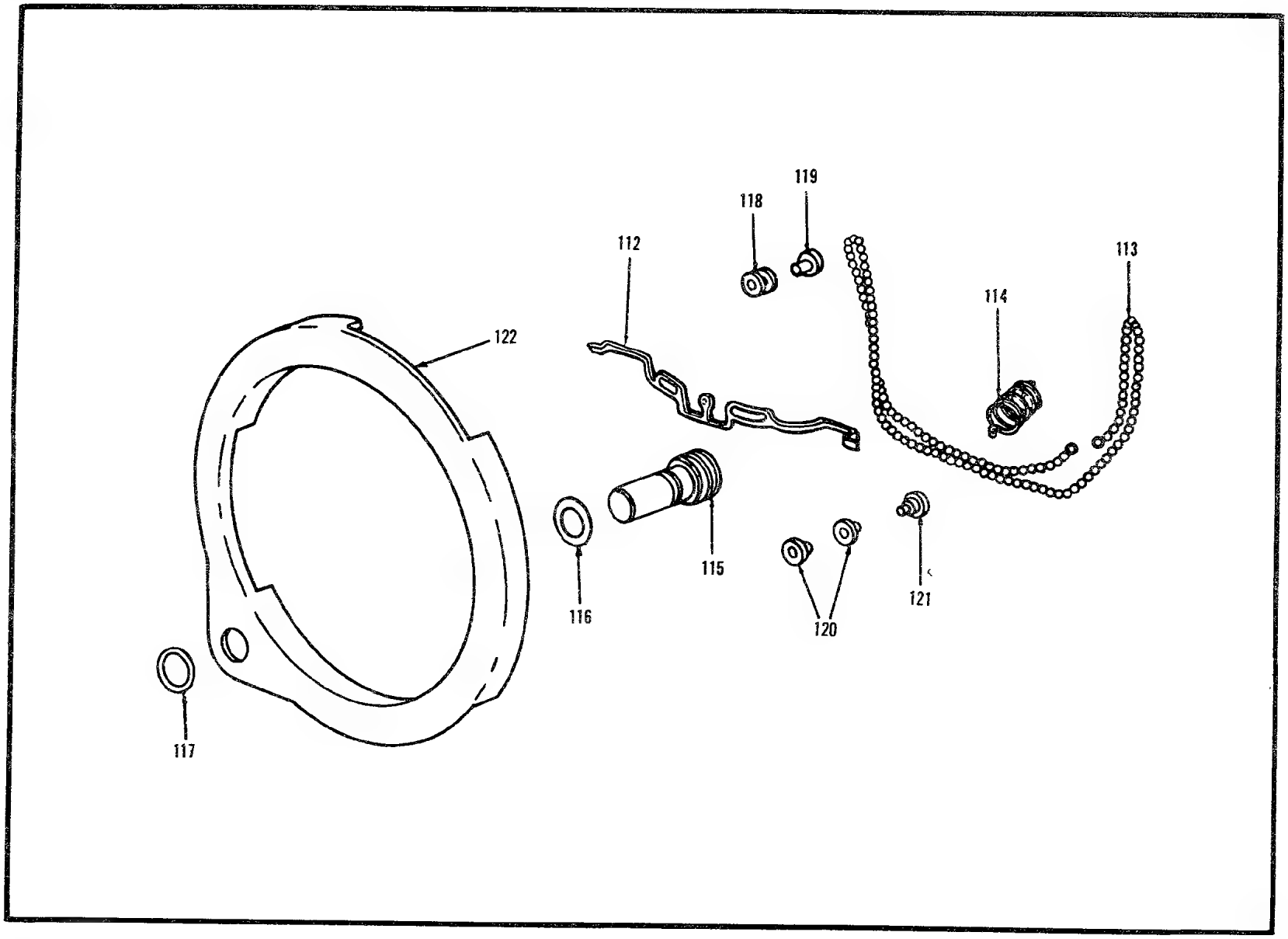

Figure 113E. Indicator, Attitude (Attitude Bar Assembly)(Sheet 3 of 10)

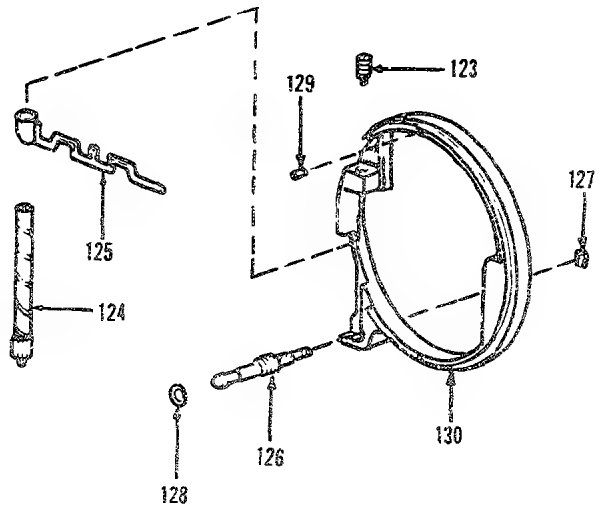

Figure 113E. Indicator, Attitude (Attitude Bar Assembly)(Sheet 4 of 10)

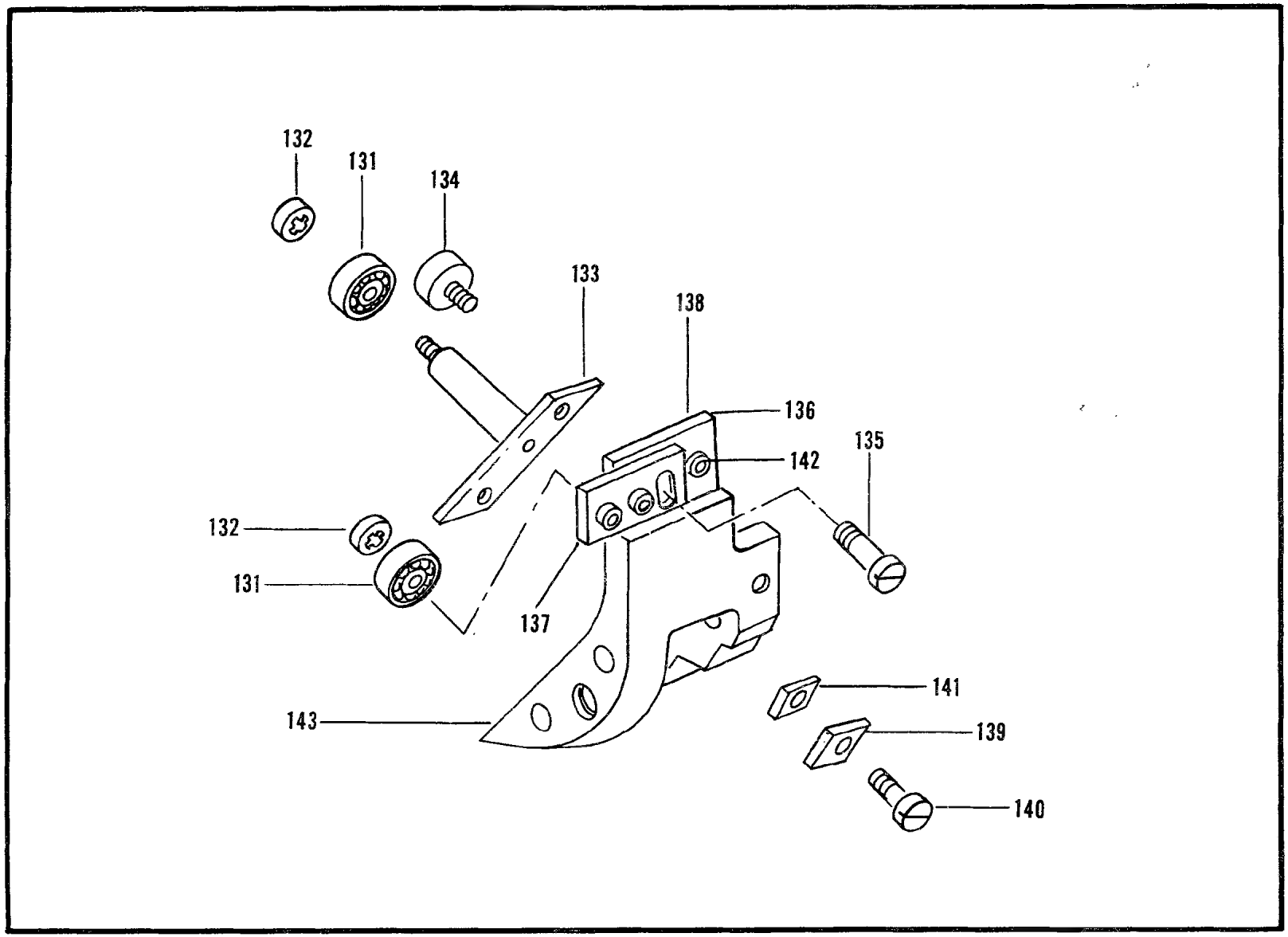

Figure 113E. Indicator, Attitude (Centering Bracket Assembly)(Sheet 5 of 10)

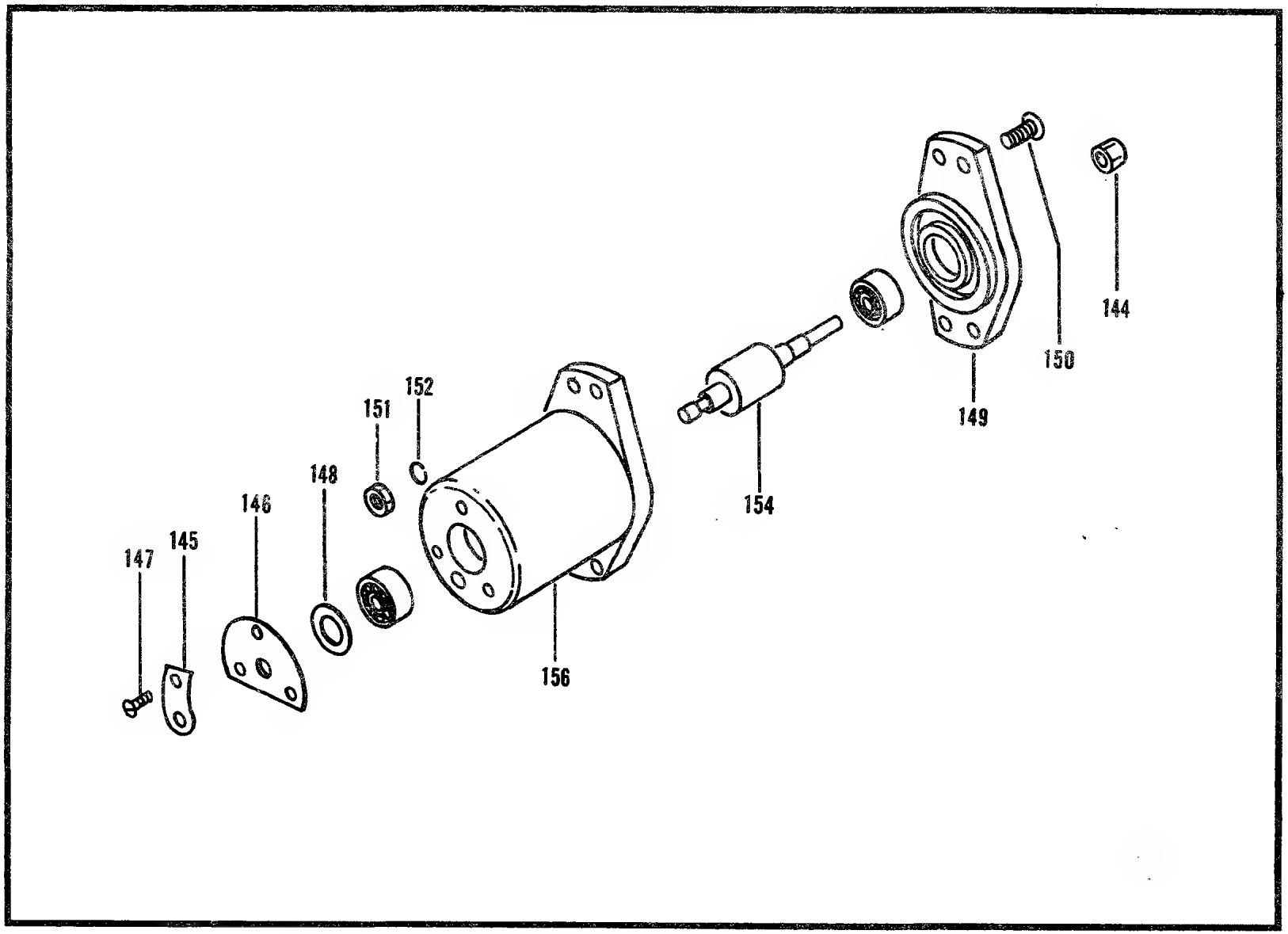

Figure 113E. Indicator, Attitude (Low Inertia Motor Assembly)(Sheet 6 of 10)

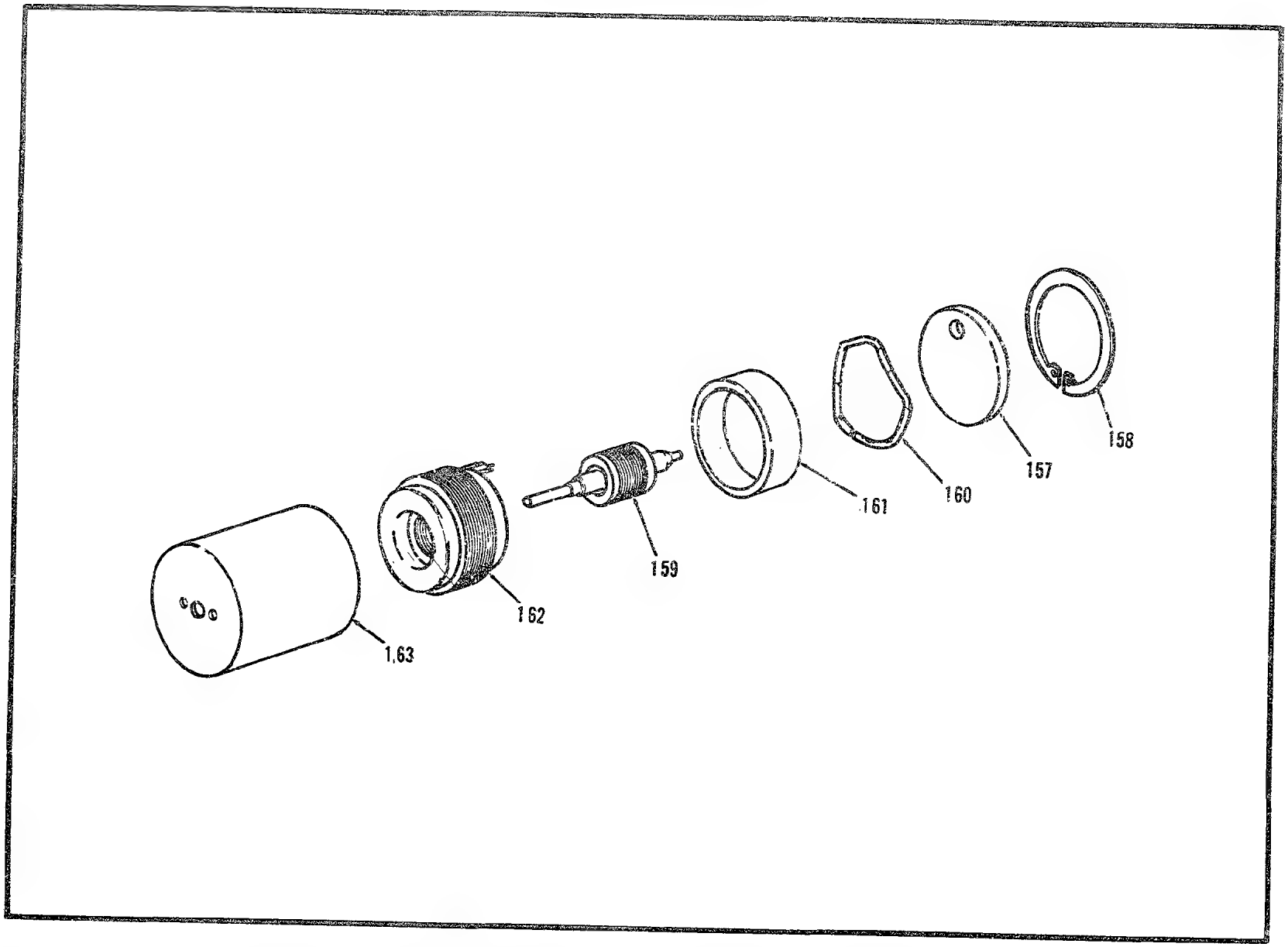

Figure 113E. Indicator, Attitude (Low Inertia Motor Assembly)(Sheet 7 of 10)

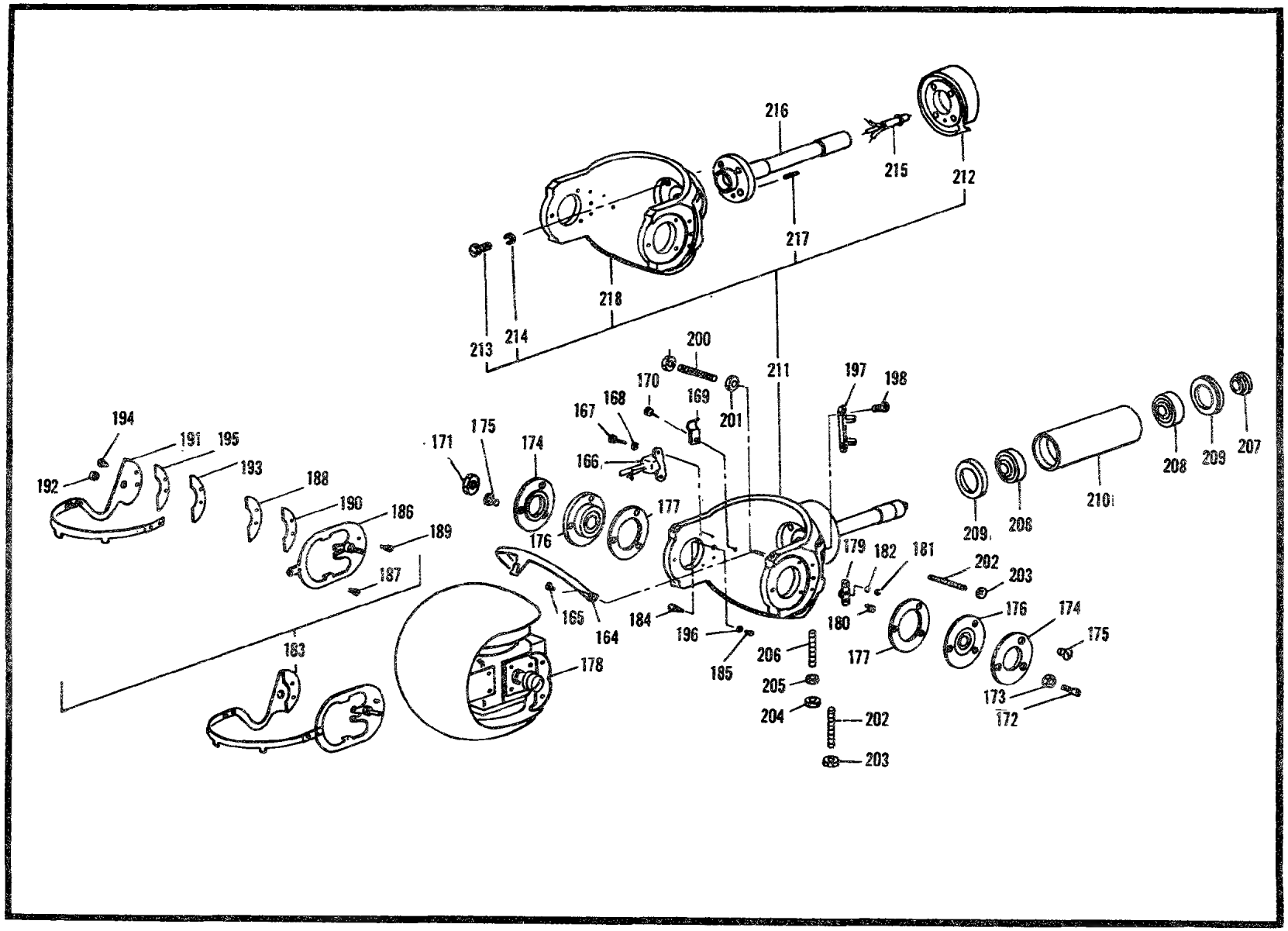

Figure 113E. Indicator, Attitude (Gyro and Yoke Assembly)(Sheet 8 of 10)

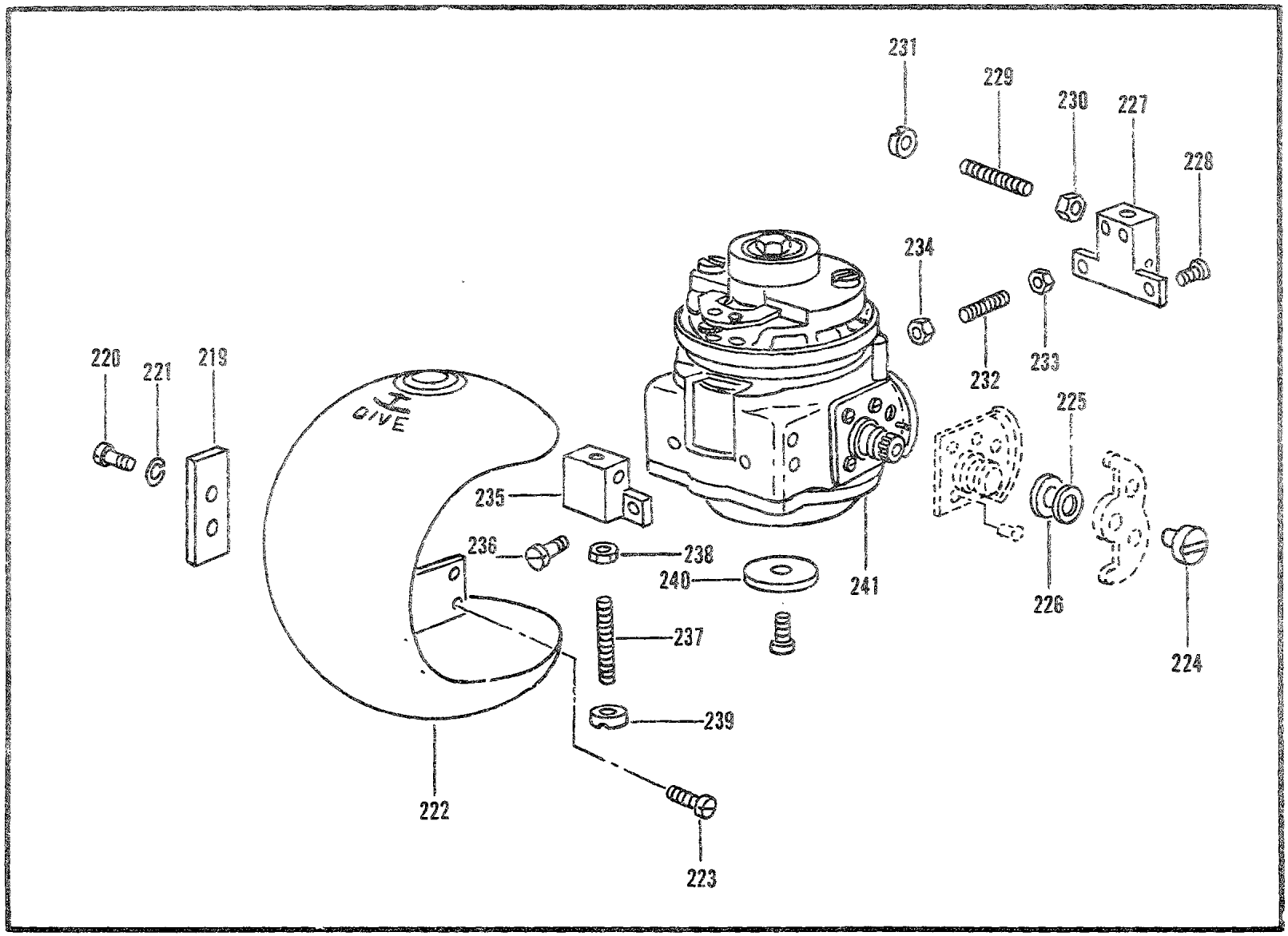

724 Figure 113E. Indicator, Attitude (Gyro and Sphere Assembly)(Sheet 9 of 10)

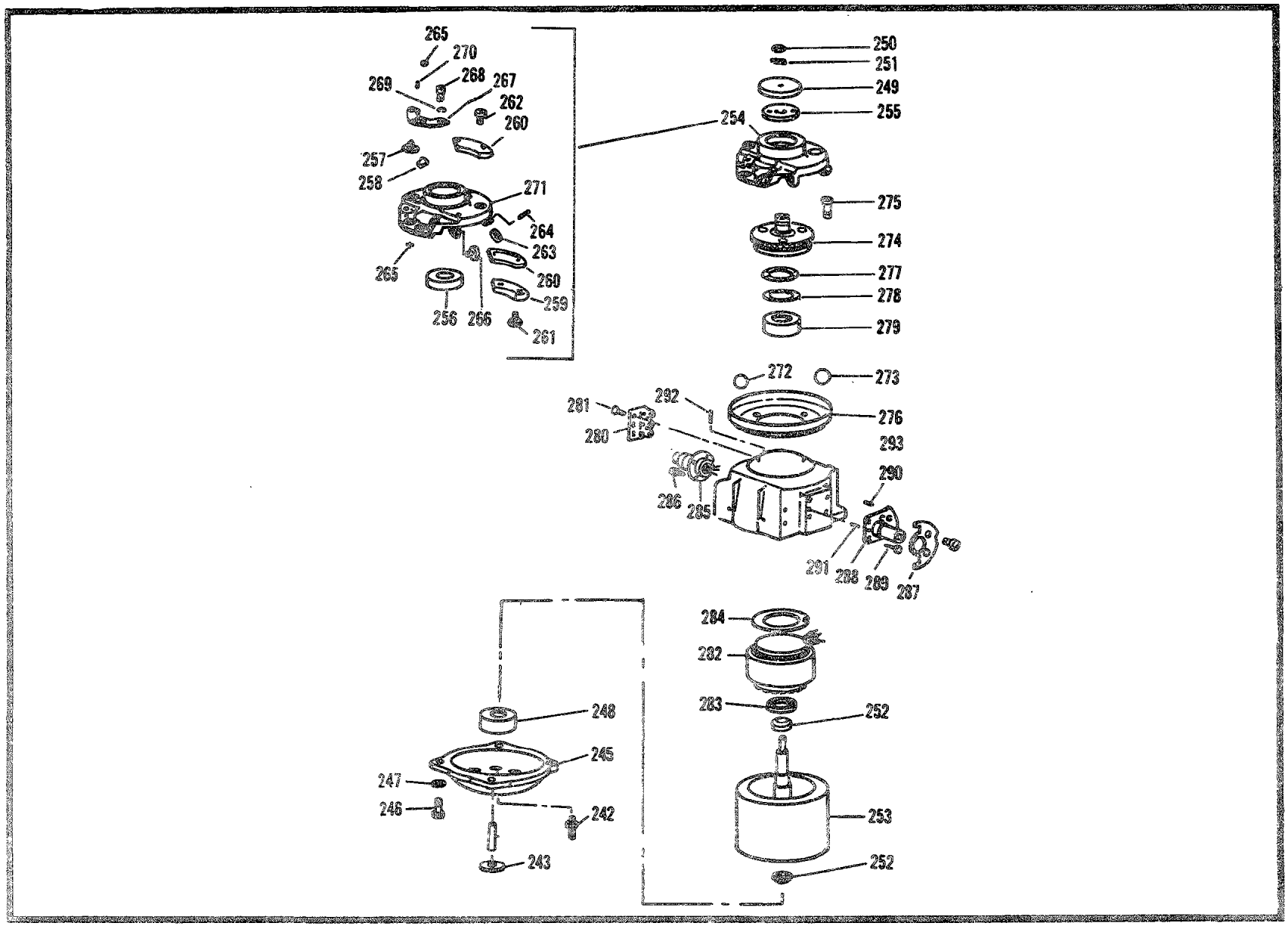

Figure 113E. Indicator, Attitude (Gyro Assembly)(Sheet 10 of 10)

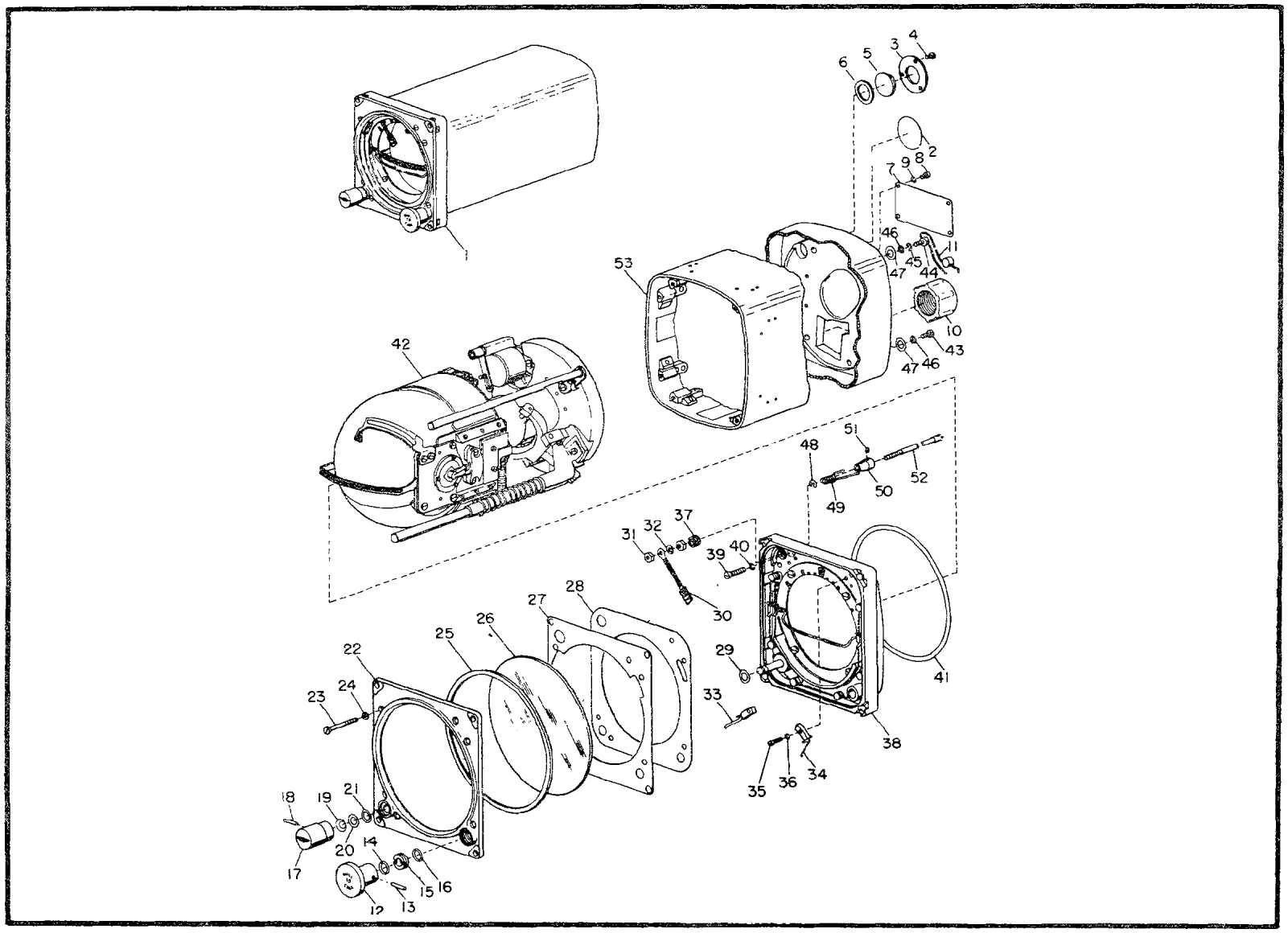

Figure 113F. Indicator, Attitude (Sheet 1 of 6)

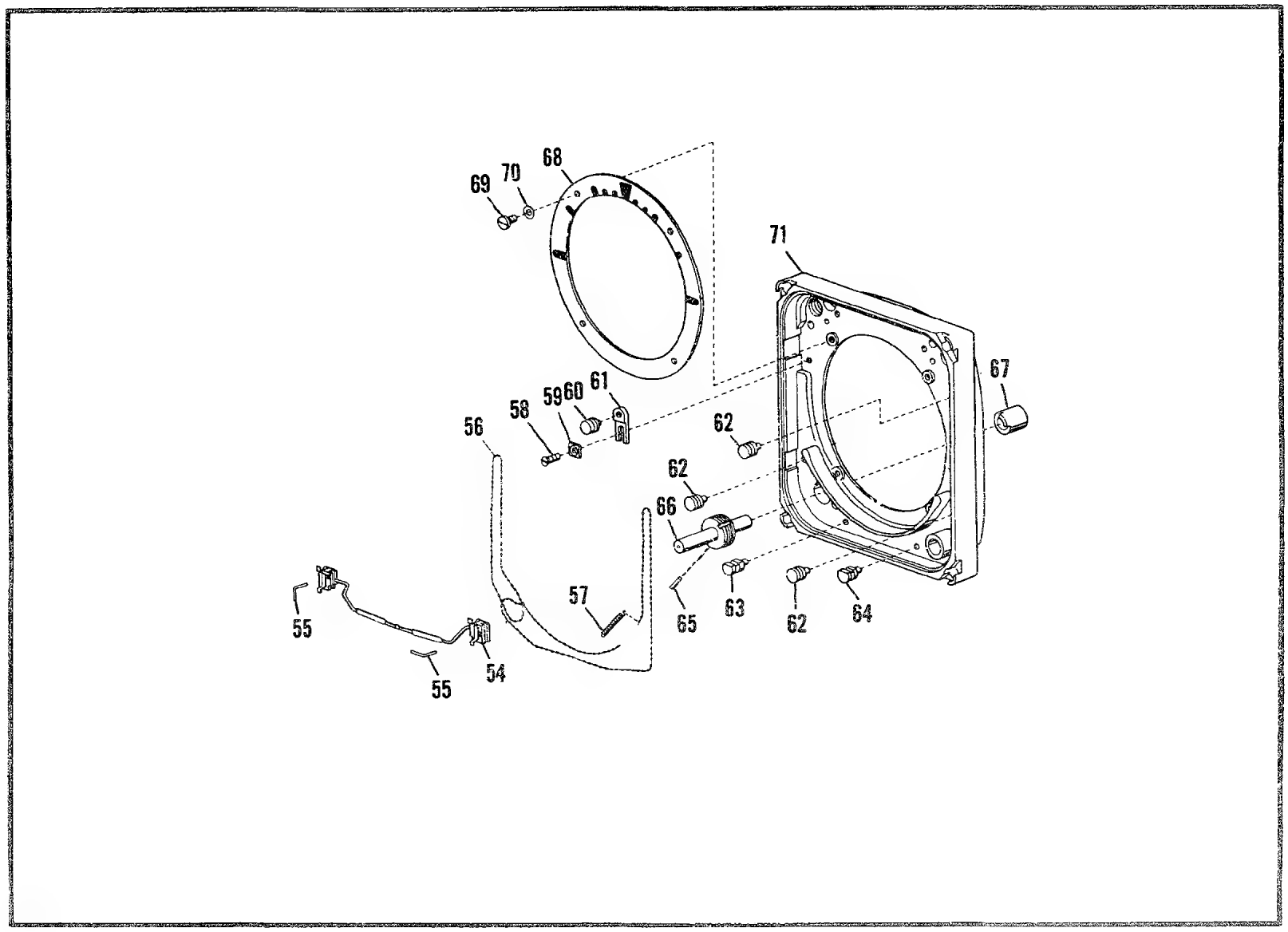

Figure 113F. Indicator, Attitude (Bezel Assembly)(Sheet 2 of 6)

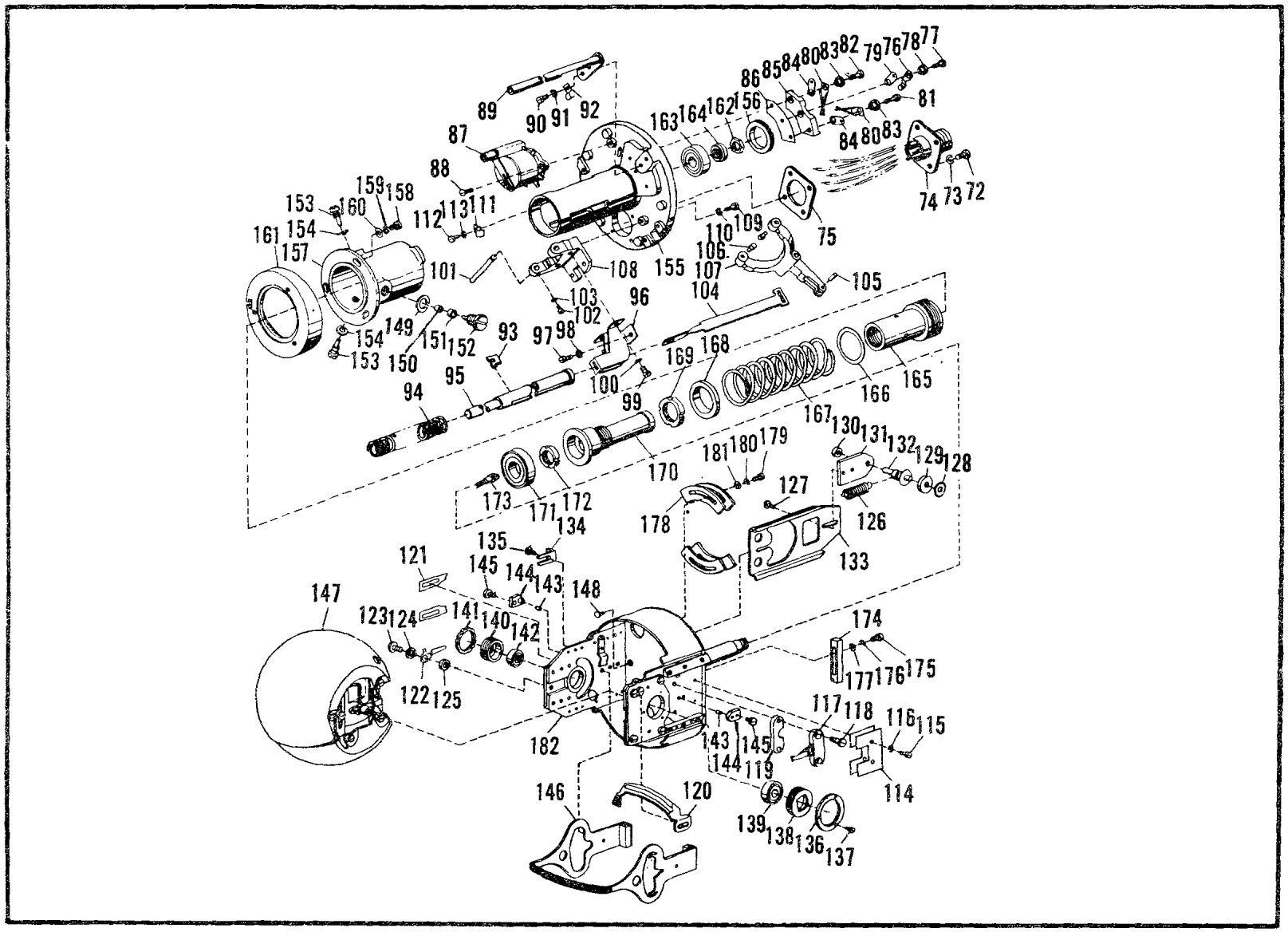

Figure 113F. Indicator, Attitude (Chassis Assembly)(Sheet 3 of 6)

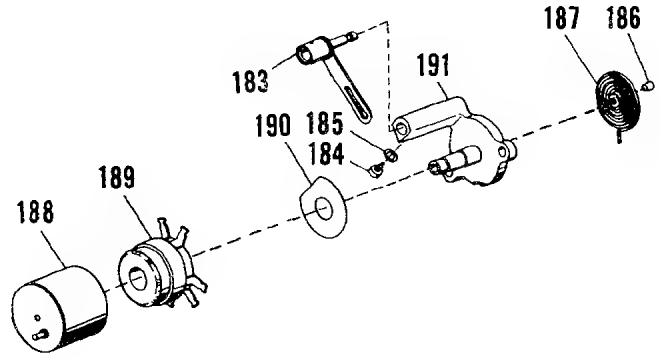

Figure 113F. Indicator, Attitude (Indicator Assembly)(Sheet 4 of 6)

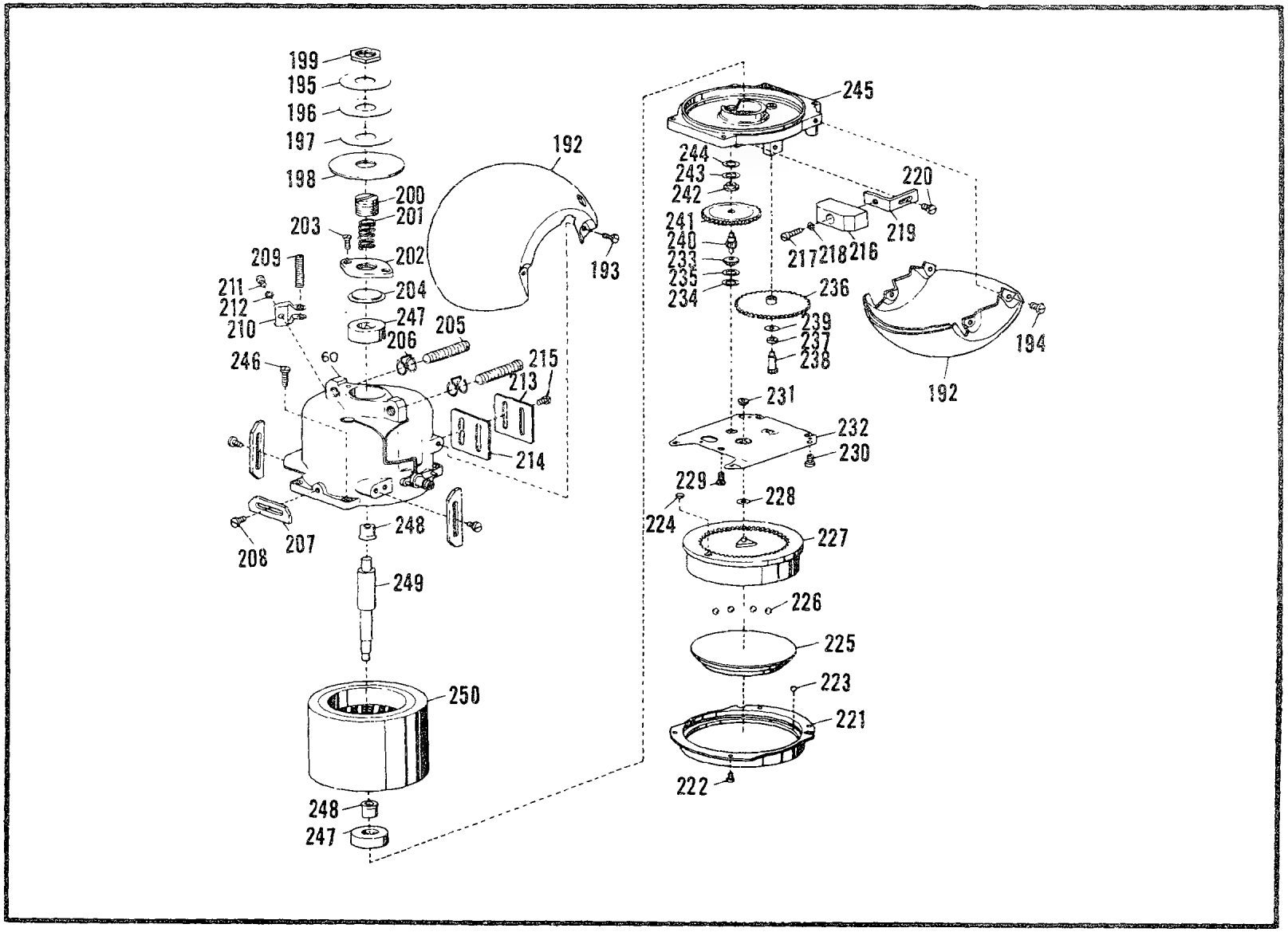

Figure 113F. Indicator, Attitude (Gyro Assembly) (Sheet 5 of 6)

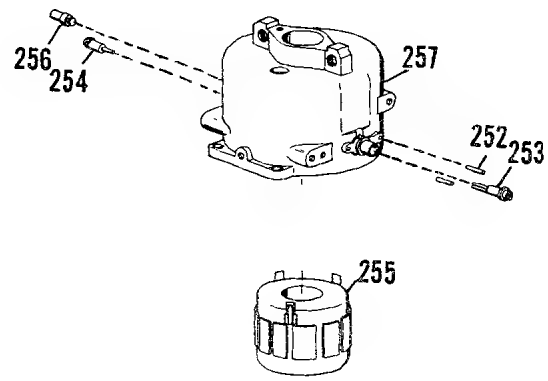

Figure 113F. Indicator, Attitude (Case Assembly)(Sheet 6 of 6)

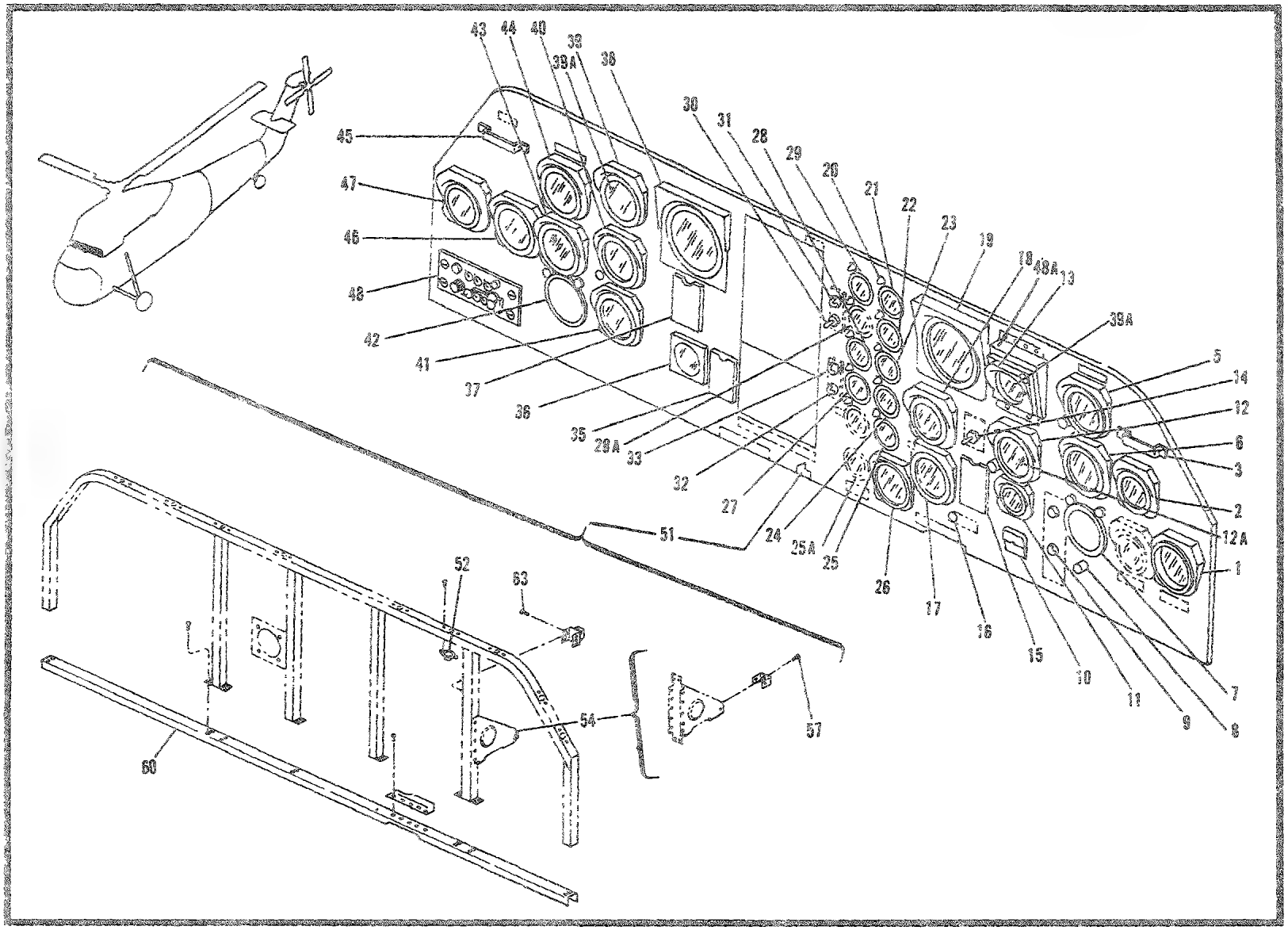

Figure 114. Panel Assembly-Flight and Engine Instrument (USBL EFF 54-3000 and Subsequent)

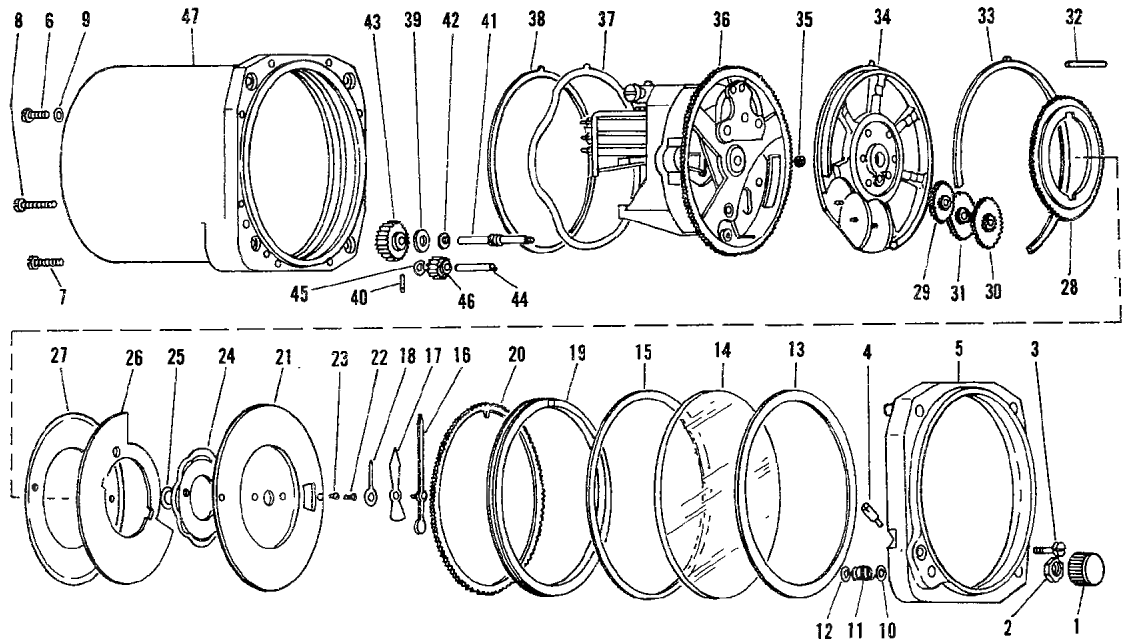

Figure 114A. Altimeter, Pressure (Sheet 1 of 2)

734

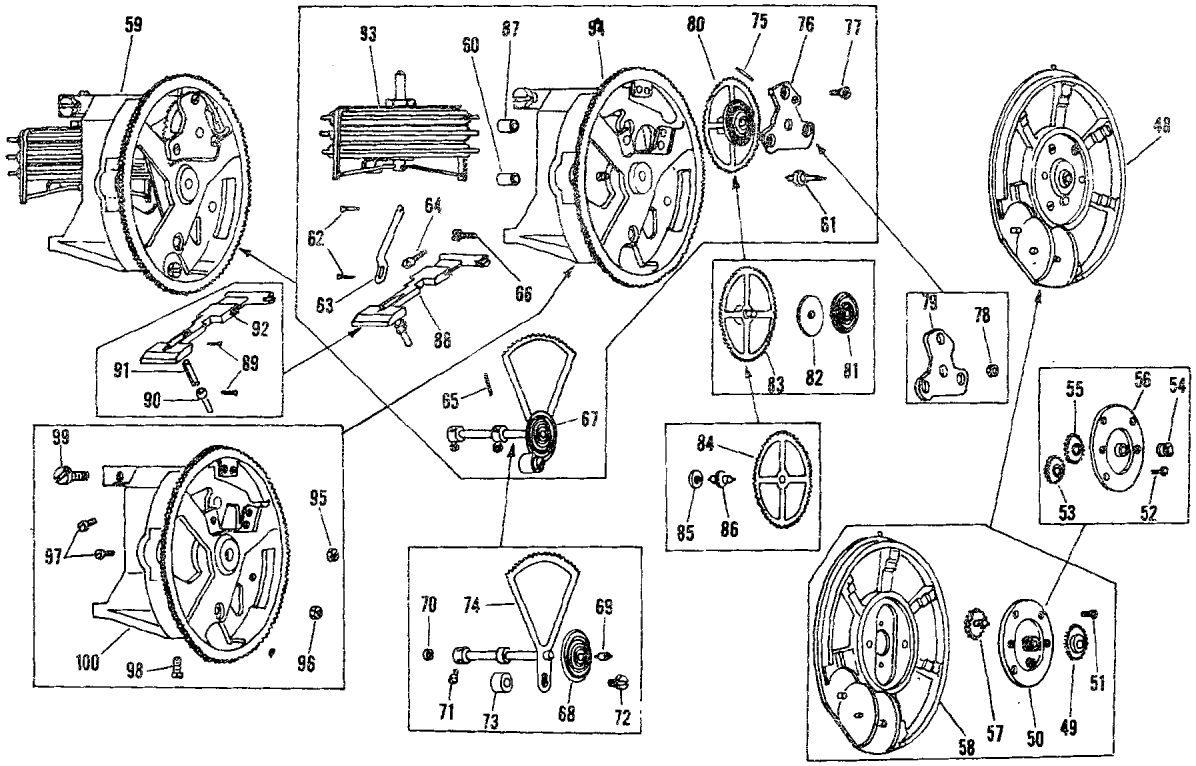

734 Figure 114A. Altimeter, Pressure (Top Plate Mechanism Assembly and Mechanism Assembly) (Sheet 2 of 2)

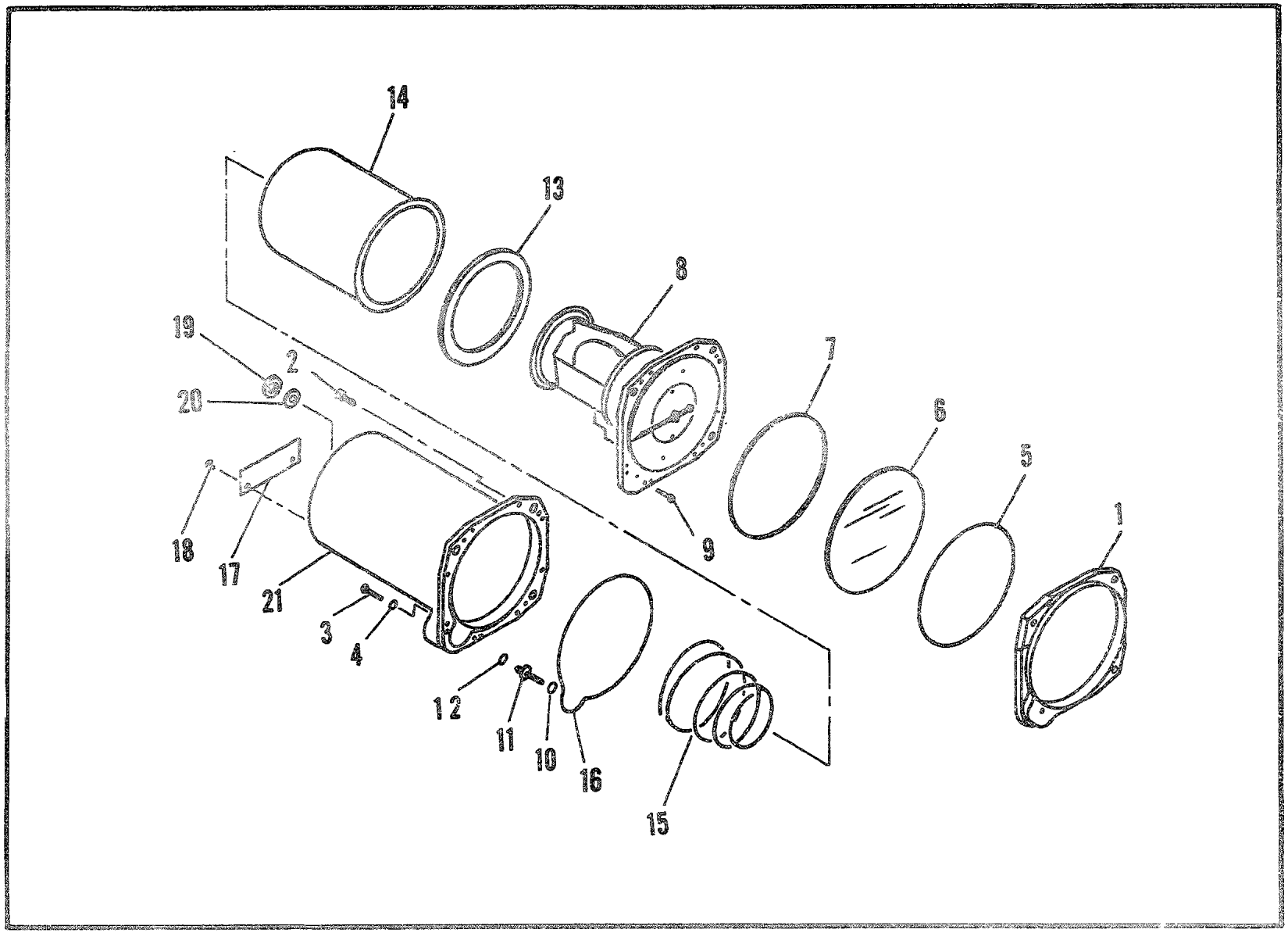

Figure 114B. Indicator, Vertical Velocity (Sheet 1 of 2)

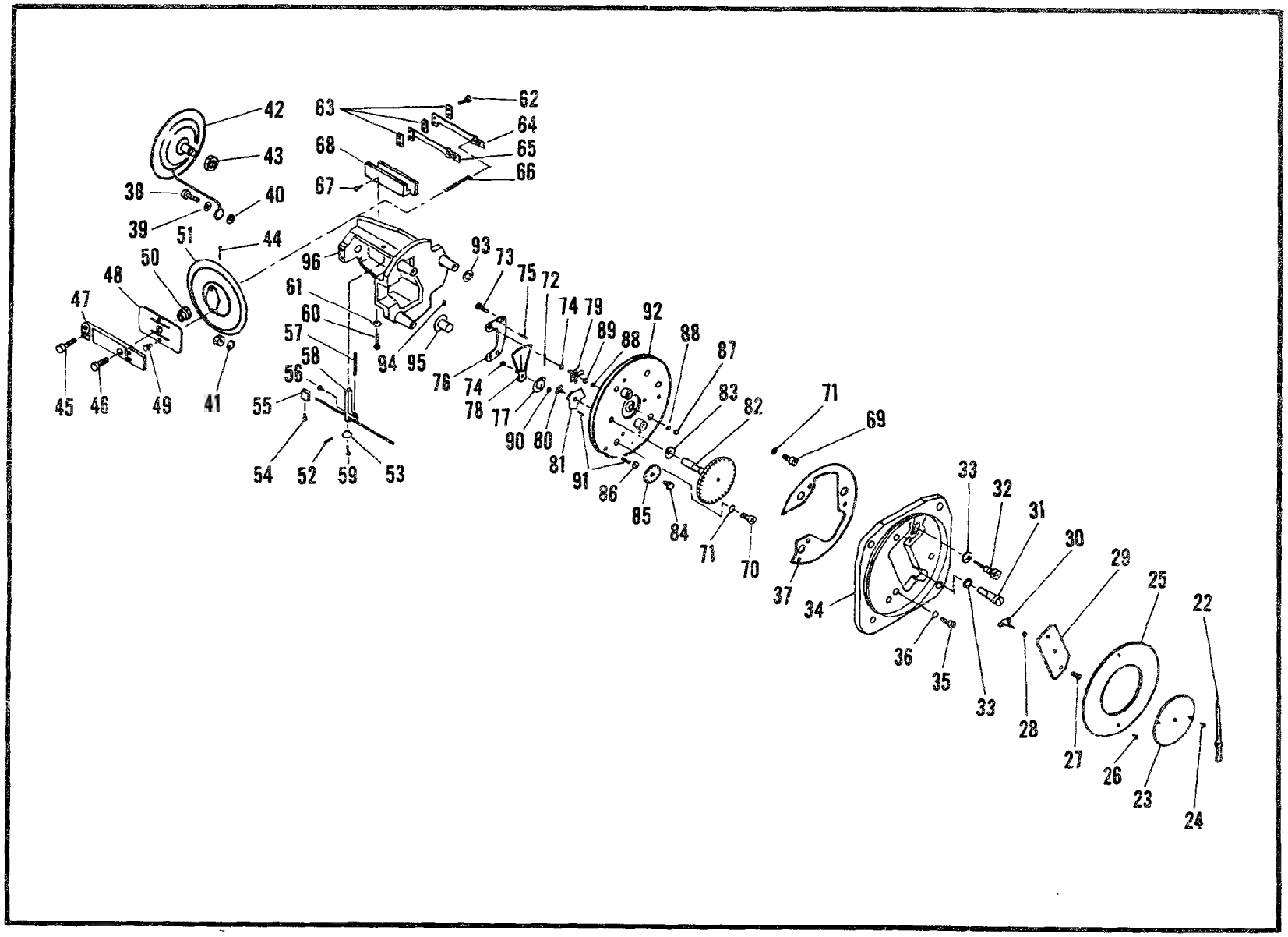

Figure 114B. Indicator, Vertical Velocity (Mechanism Assembly) (Sheet 2 of 2)

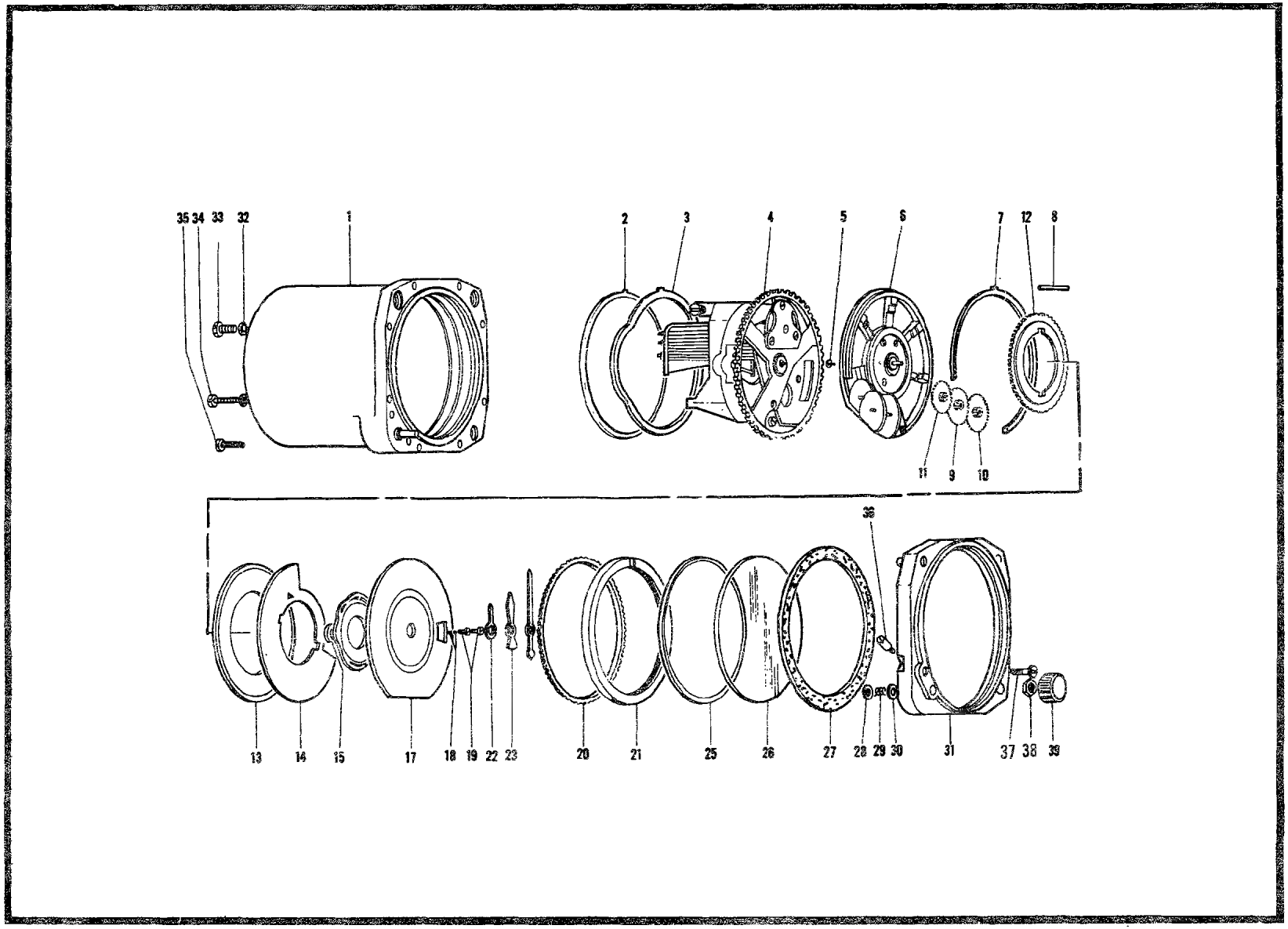

Figure 114C. Altimeter, Pressure (Sheet 1 of 2)

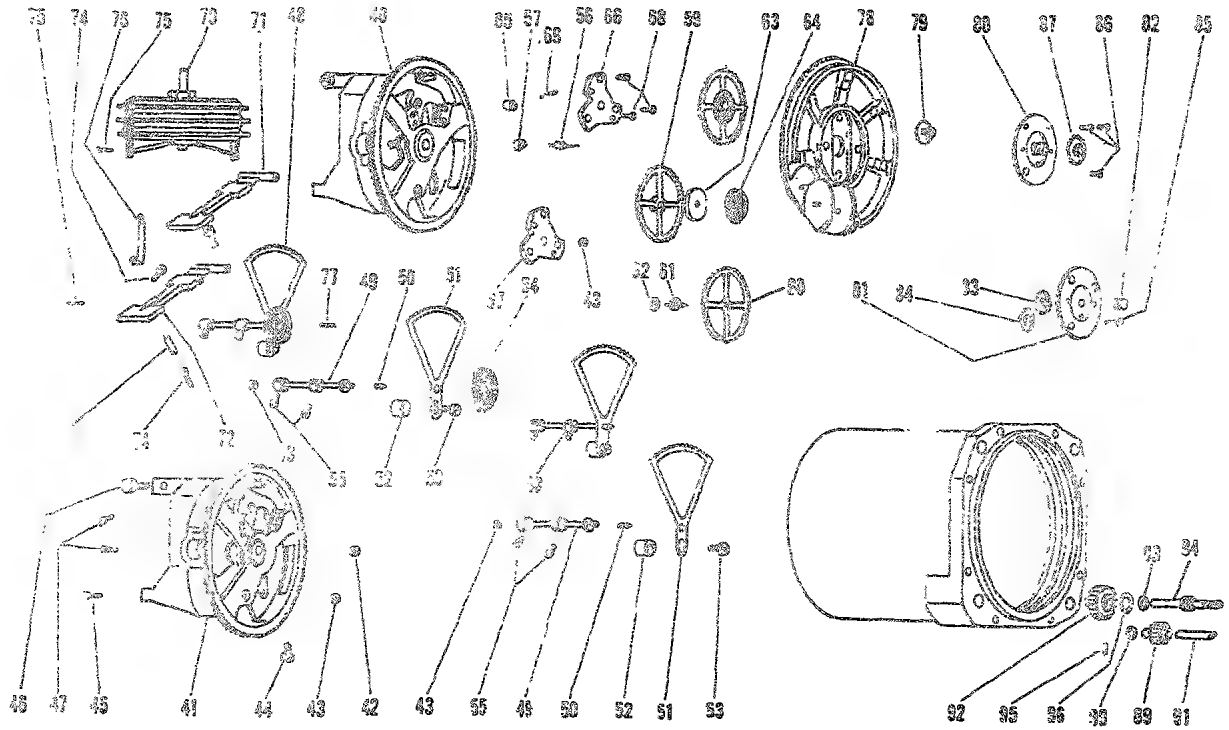

Figure 114C. Altimeter, Pressure (Mechanism Assembly) (Sheet 2 of 2)

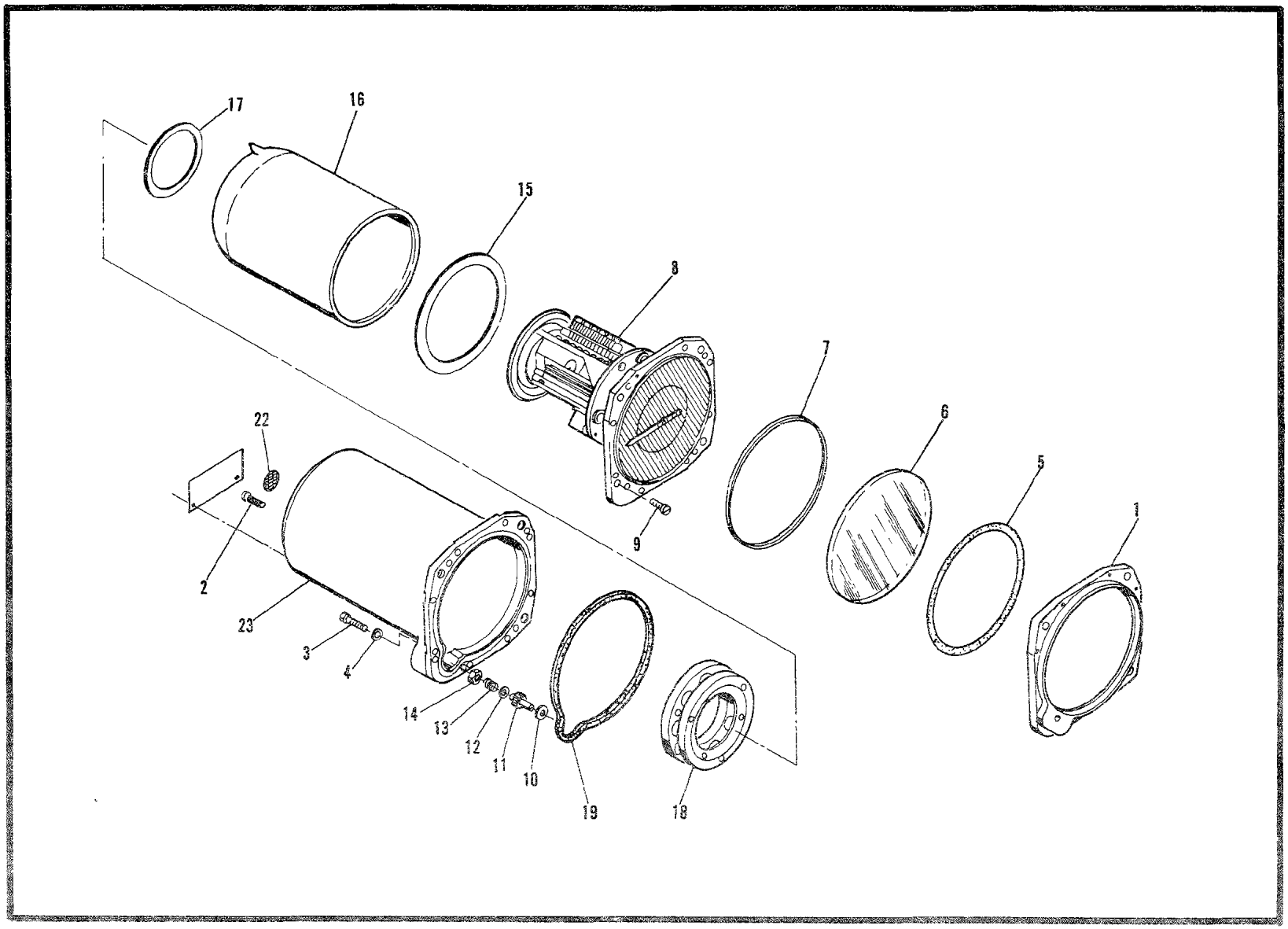

Figure 114D. Indicator, Vertical Velocity (Sheet 1 of 2)

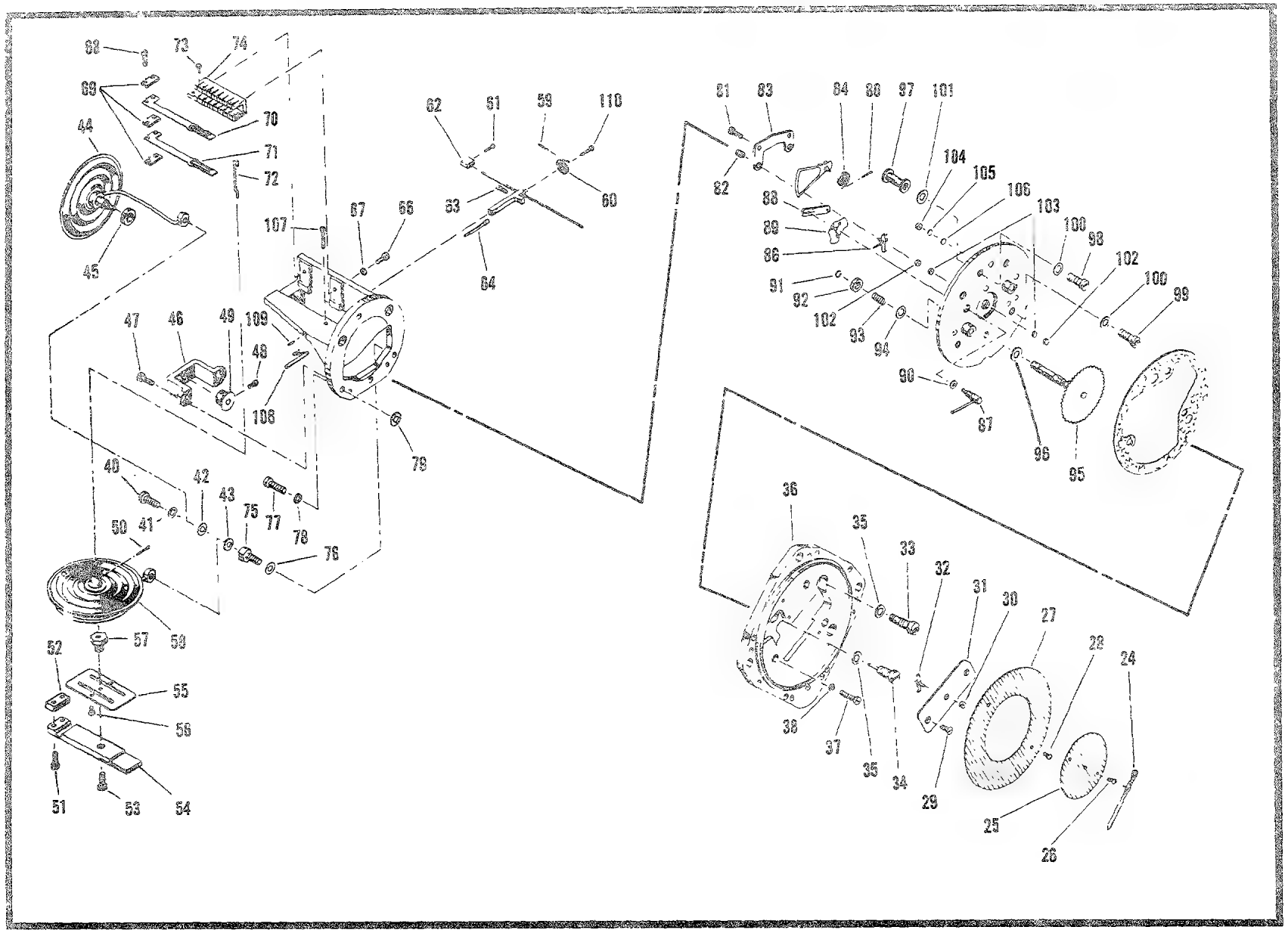

Figure 114D. Indicator, Vertical Velocity ((Mechanism Assembly (Sheet 2 of 2)

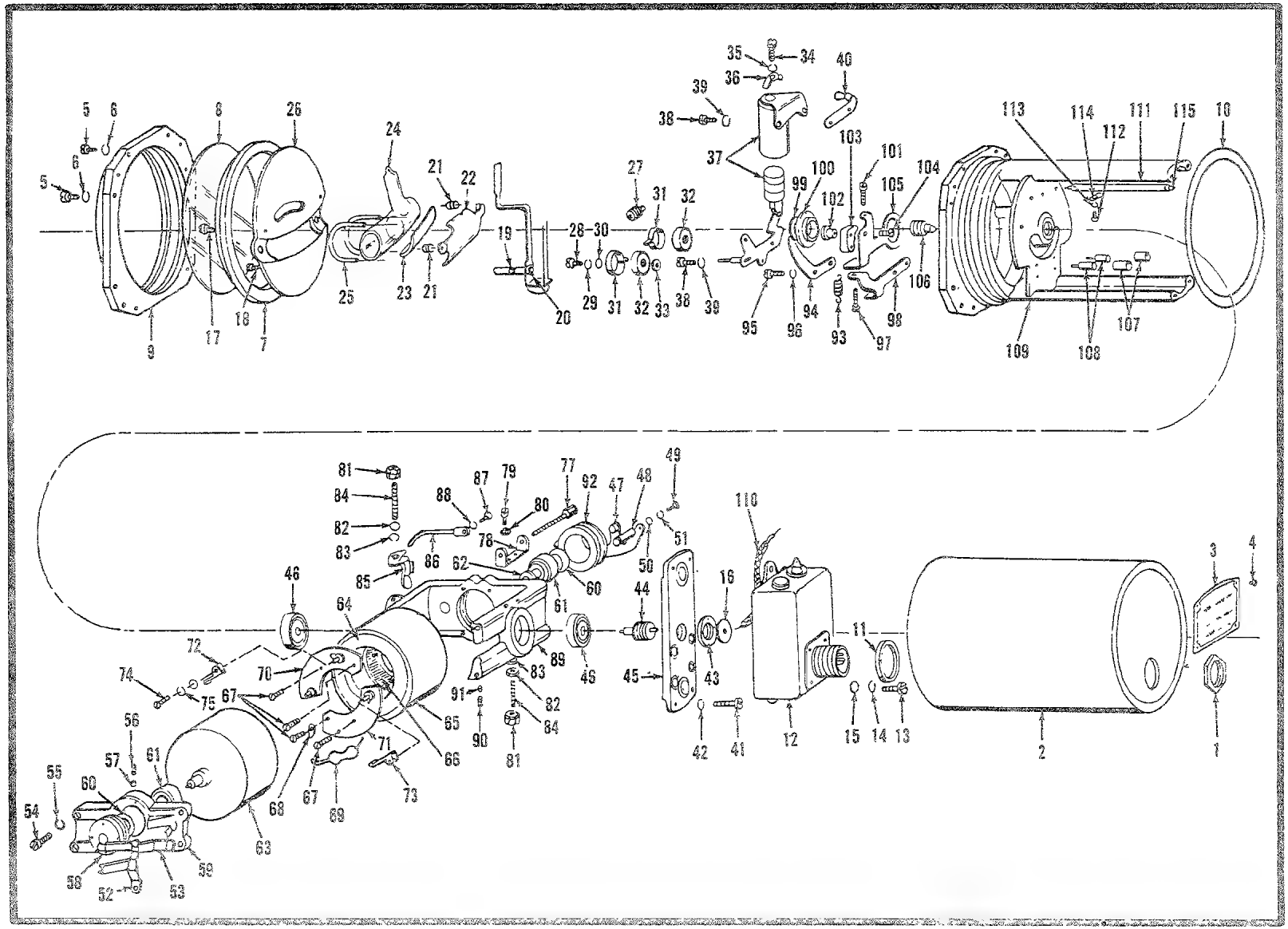

Figure 114E. Indicator, Turn and Slip

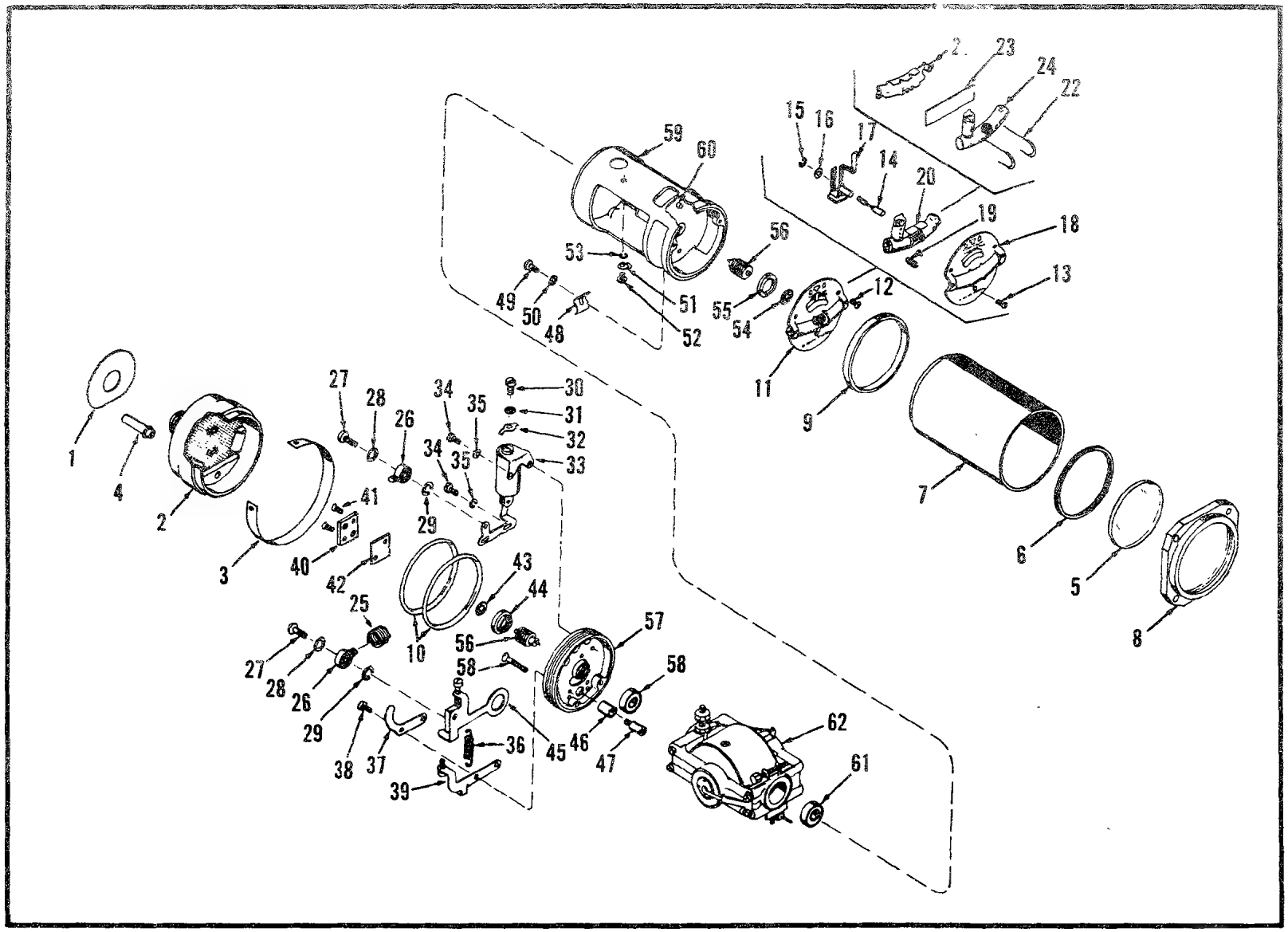

Figure 114F. Indicator, Turn and Slip (Sheet 1 of 2)

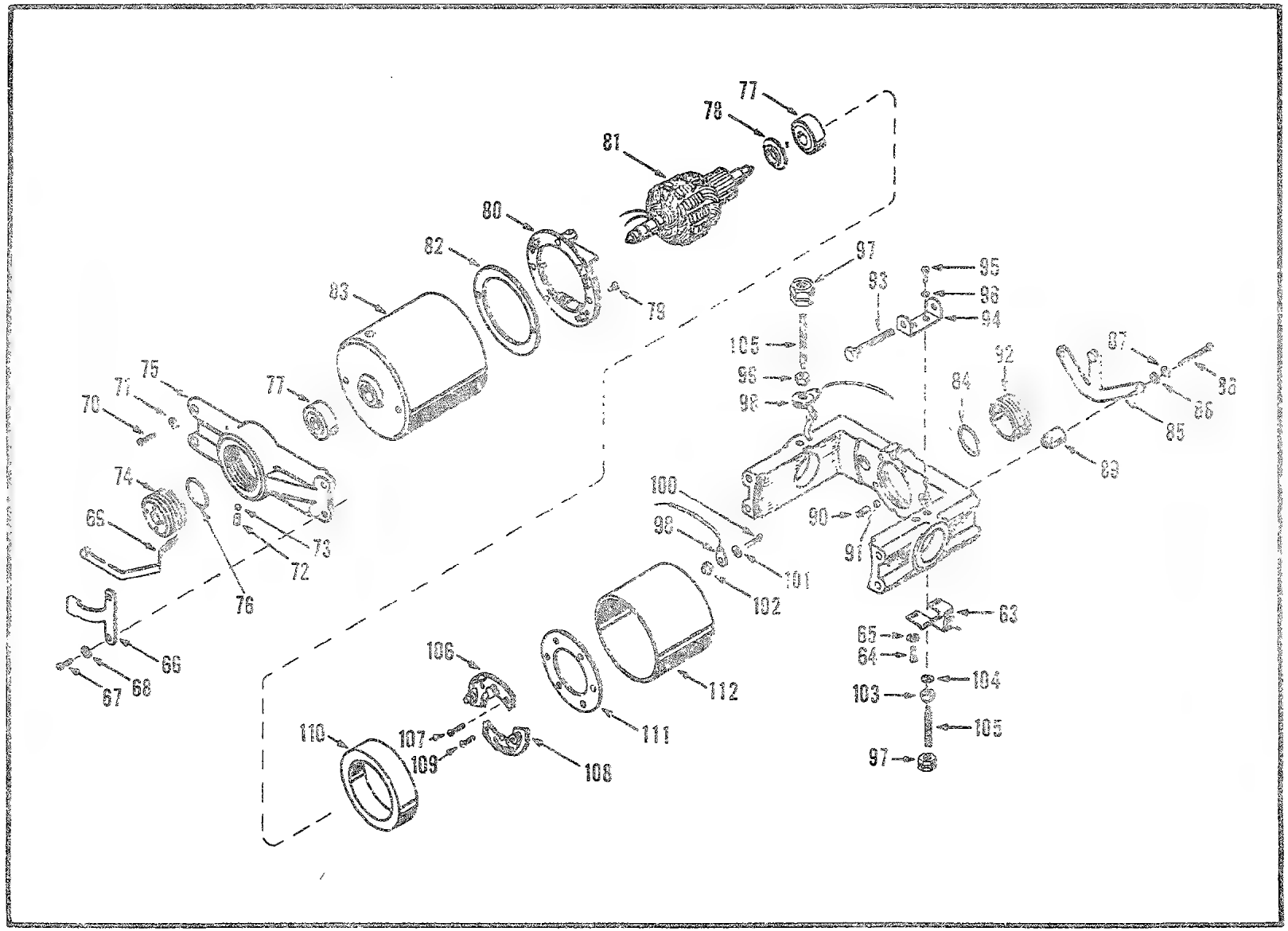

Figure 114F. Indicator, Turn and Slip (Gyro Motor Assembly)(Sheet 2 of 2)

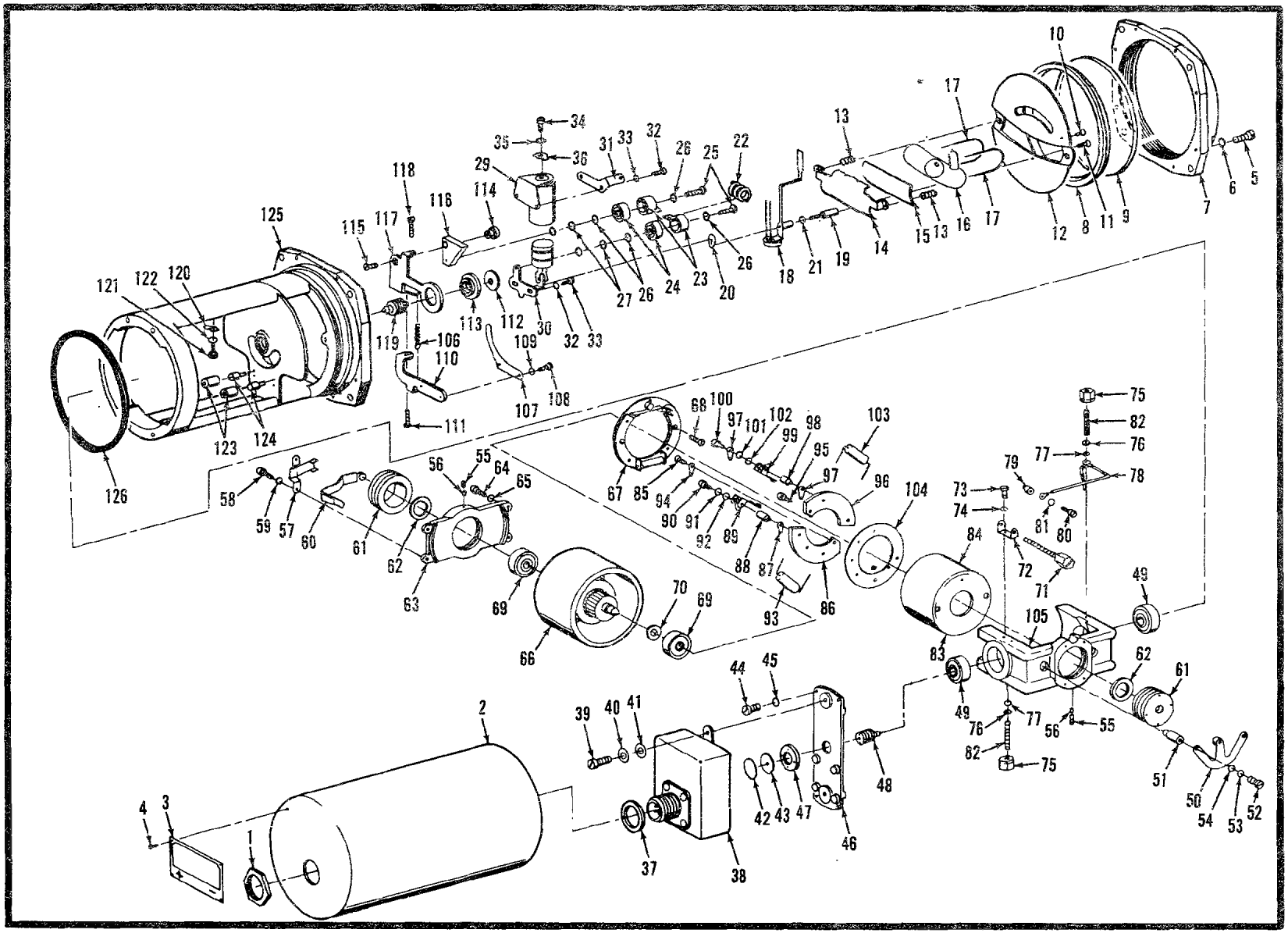

Figure 114G. Indicator, Turn and Slip

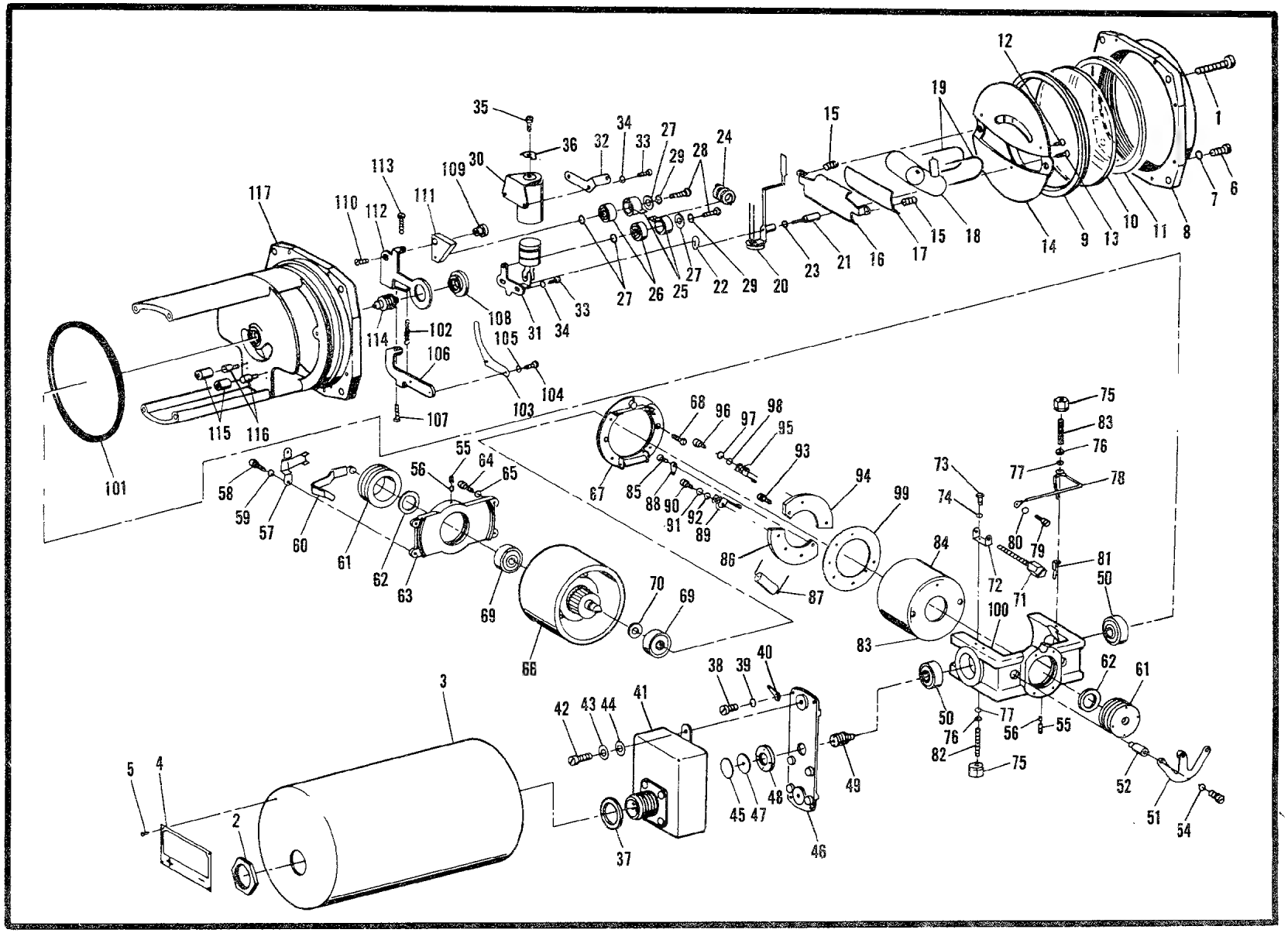

Figure 114H. Indicator, Turn And Slip

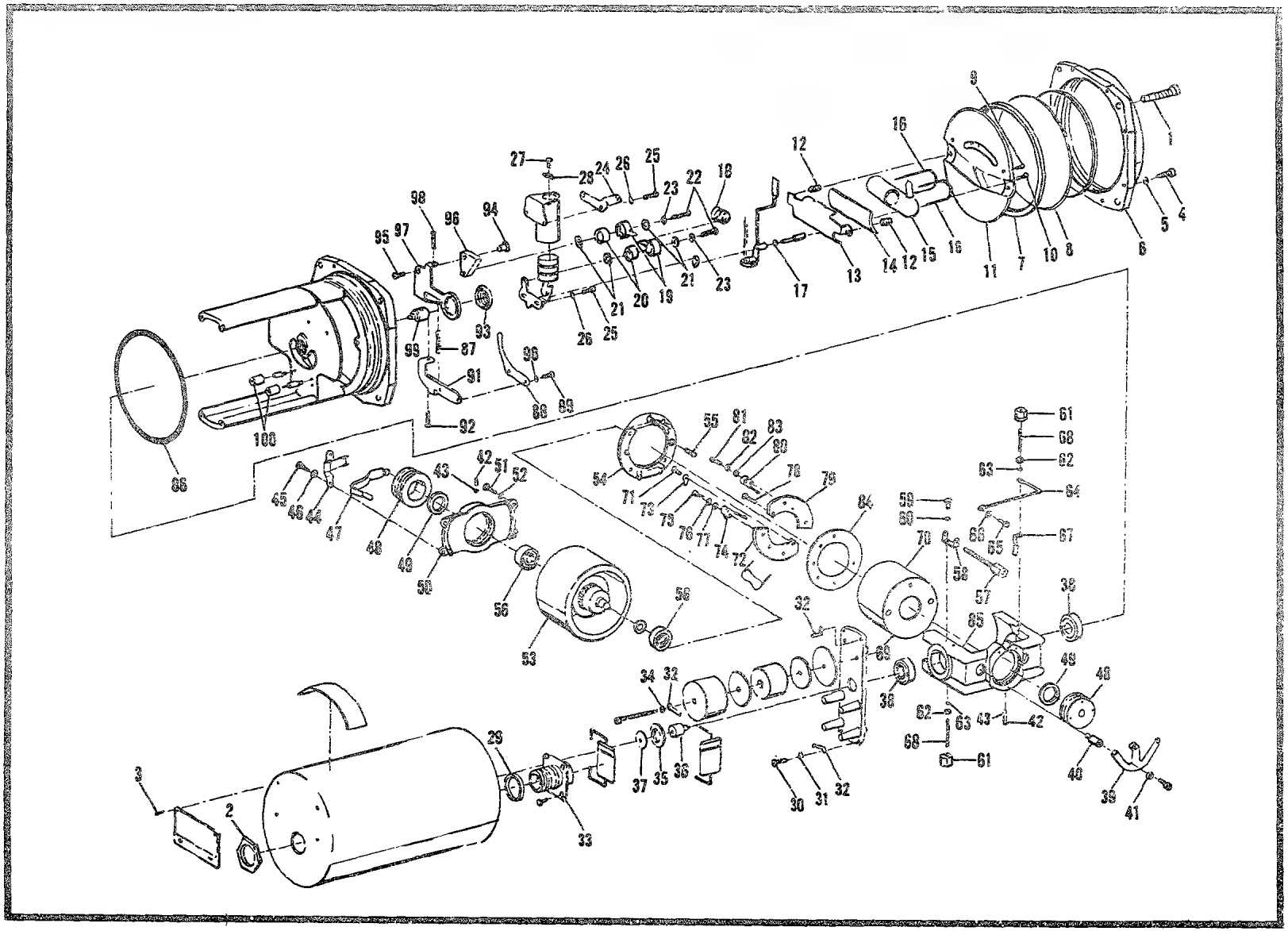

Figure 114J. Indicator, Turn and Slip

Figure 114K Not Used In TM55-1520-202-35P

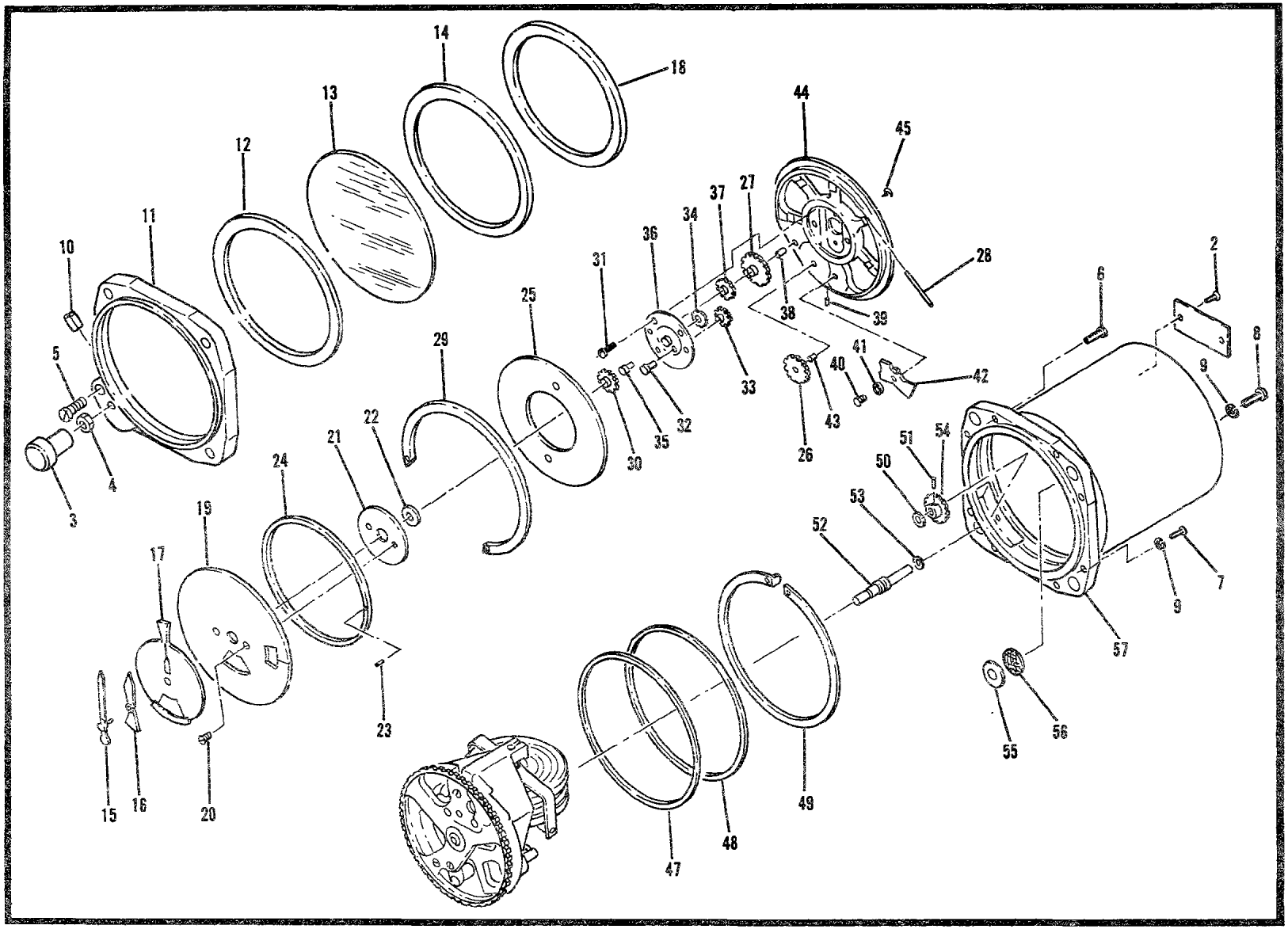

Figure 114L. Altimeter, Pressure (Sheet 1 of 2)

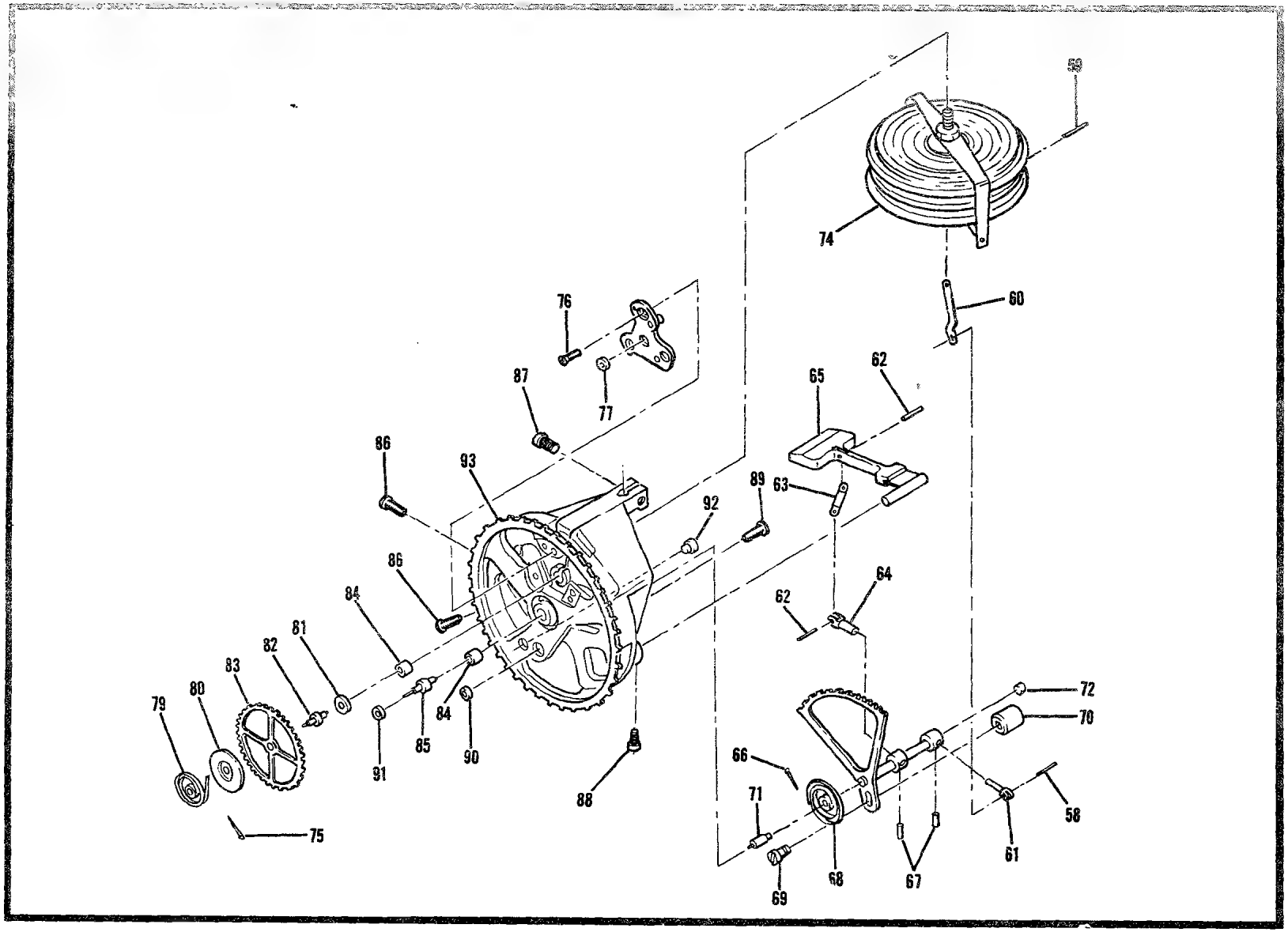

Figure 114L. Altimeter, Pressure (Sheet 2 of 2)

Figures 114Mand 114N Not Used In TM55-1520-202-35P

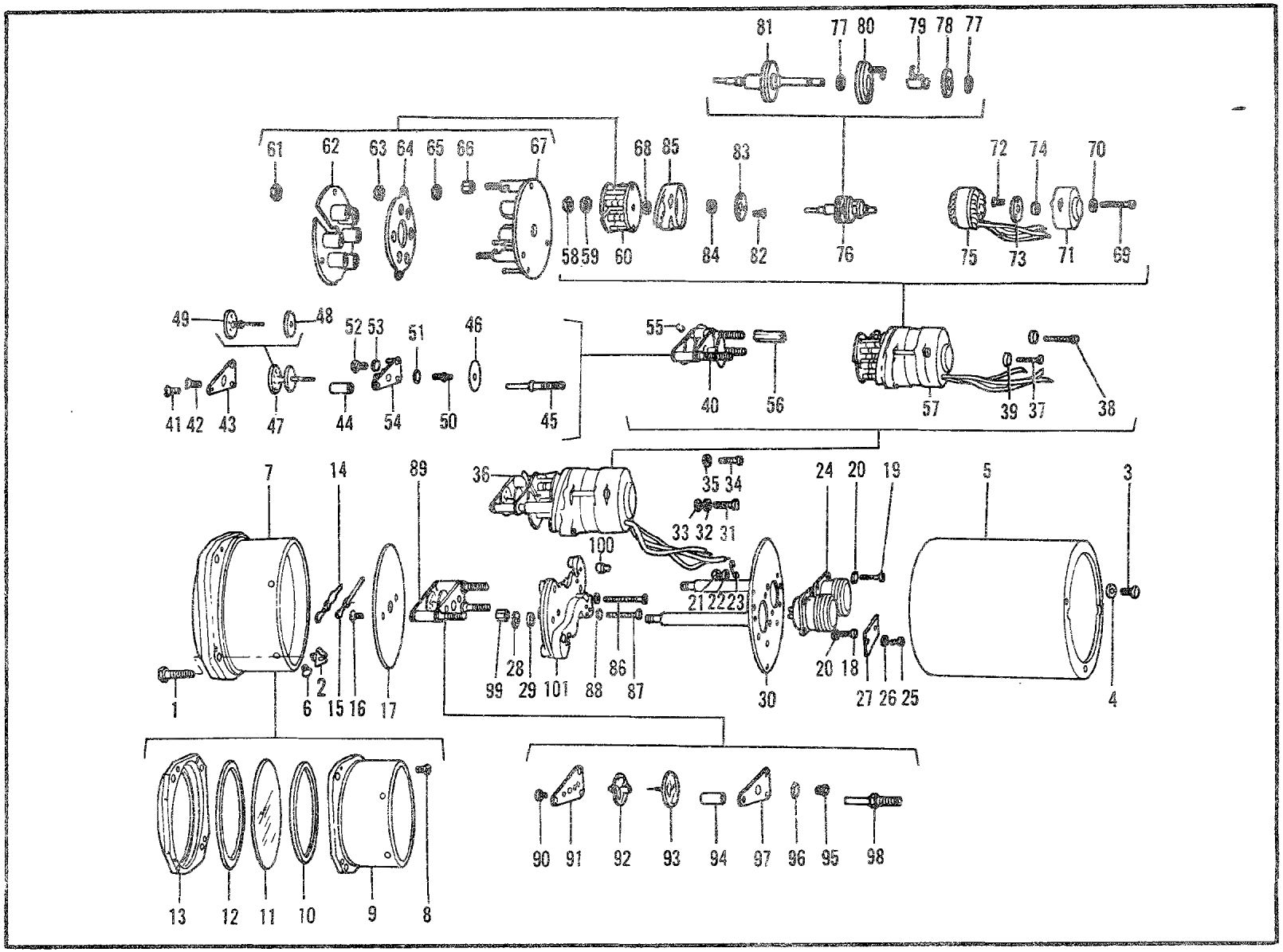

Figure 114P. Indicator, Electrical Tachometer

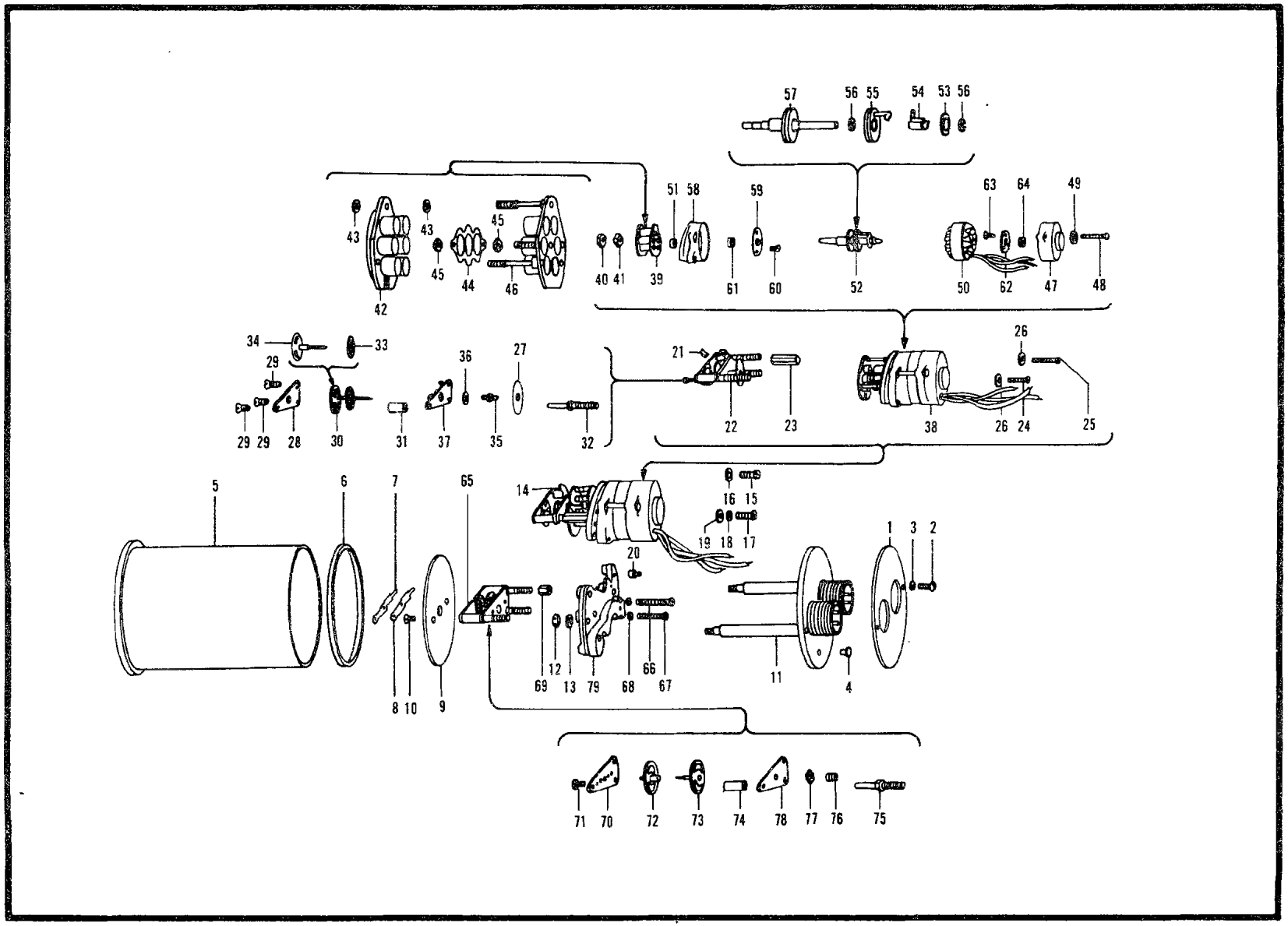

Figure 114Q. Indicator, Tachometer

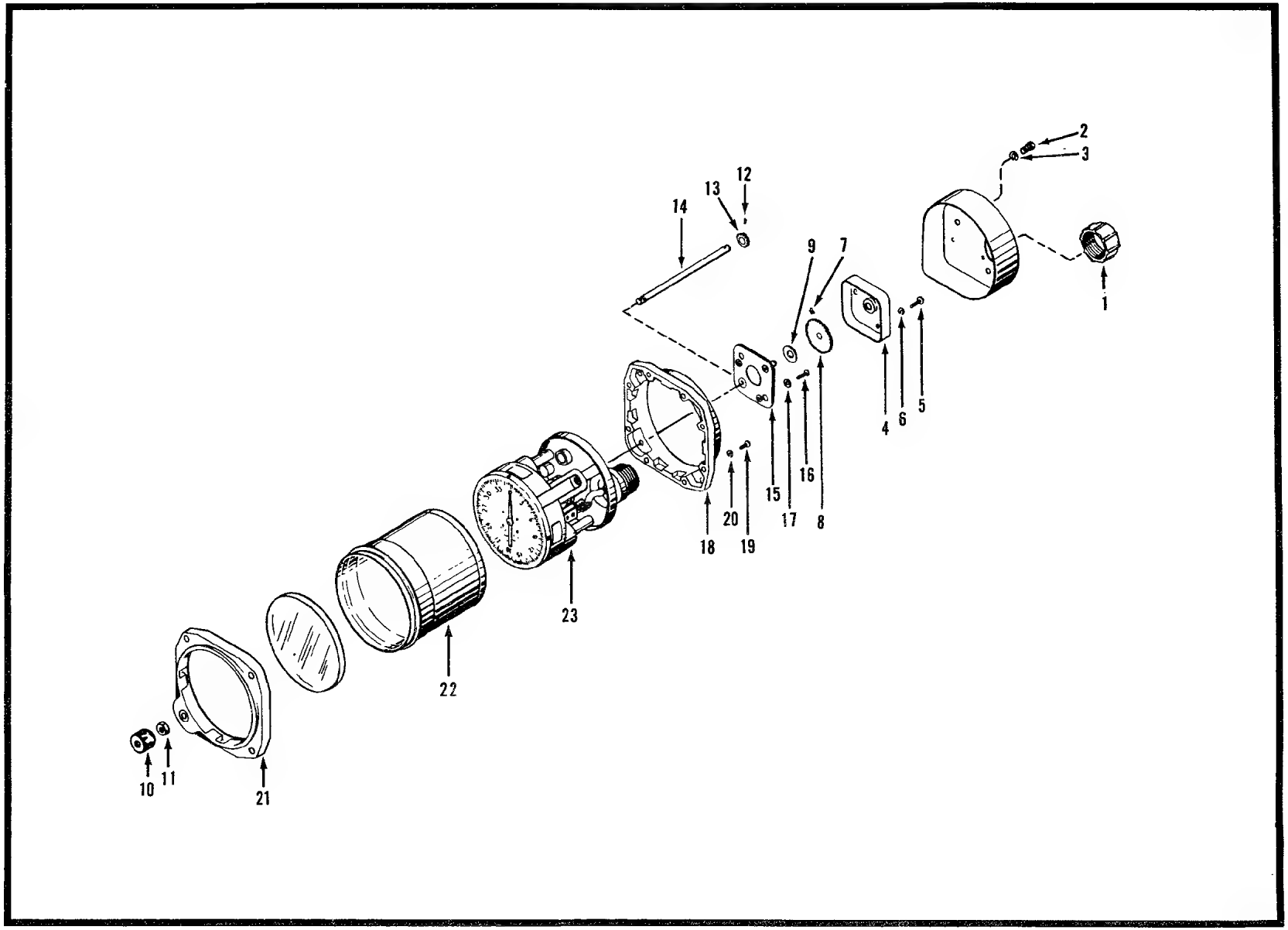

Figure 114R. Indicator, Heading (Sheet 1 of 3)

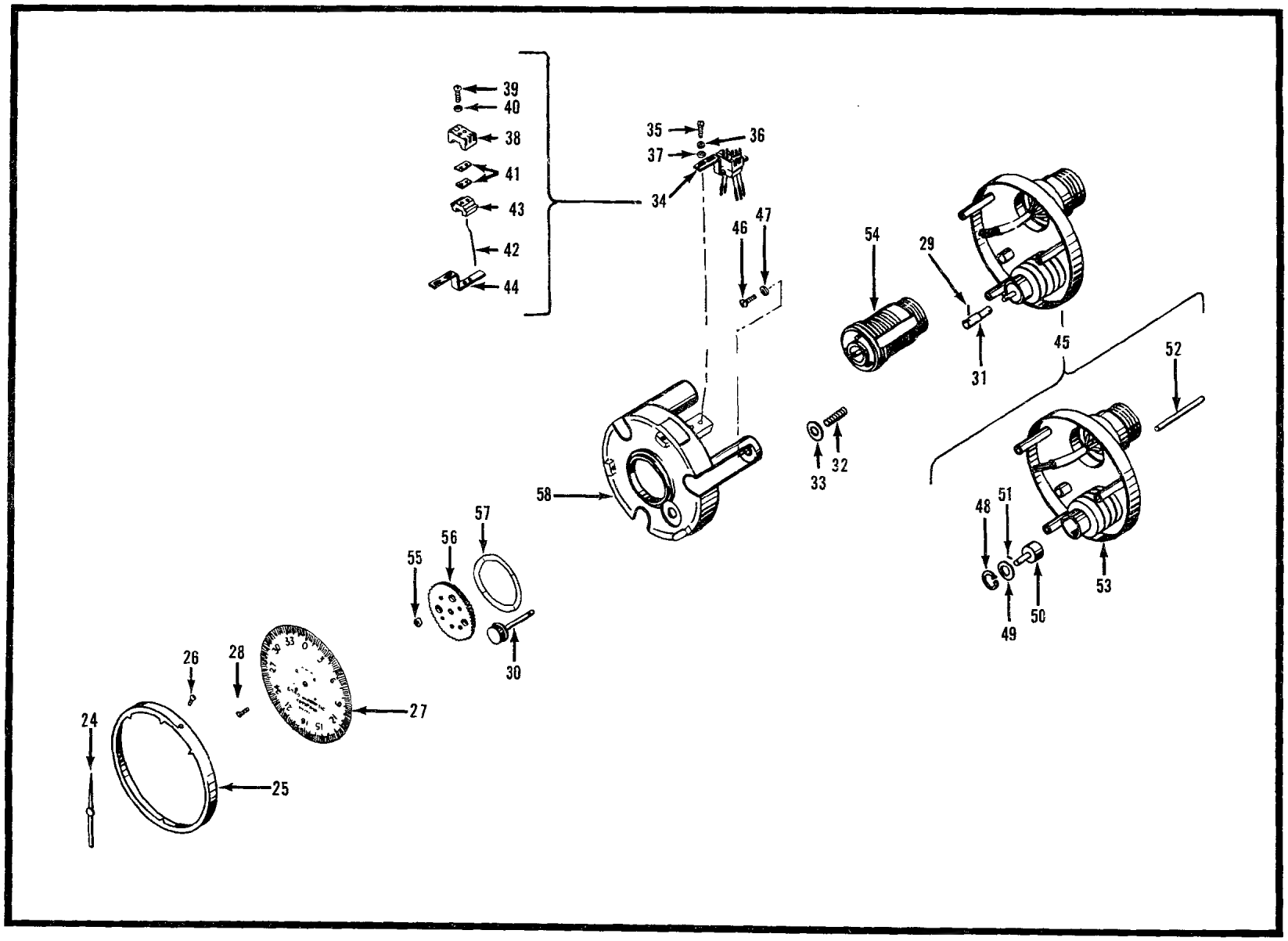

Figure 114R. Indicator, Heading (Mechanism Assembly) (Sheet 2 of 3)

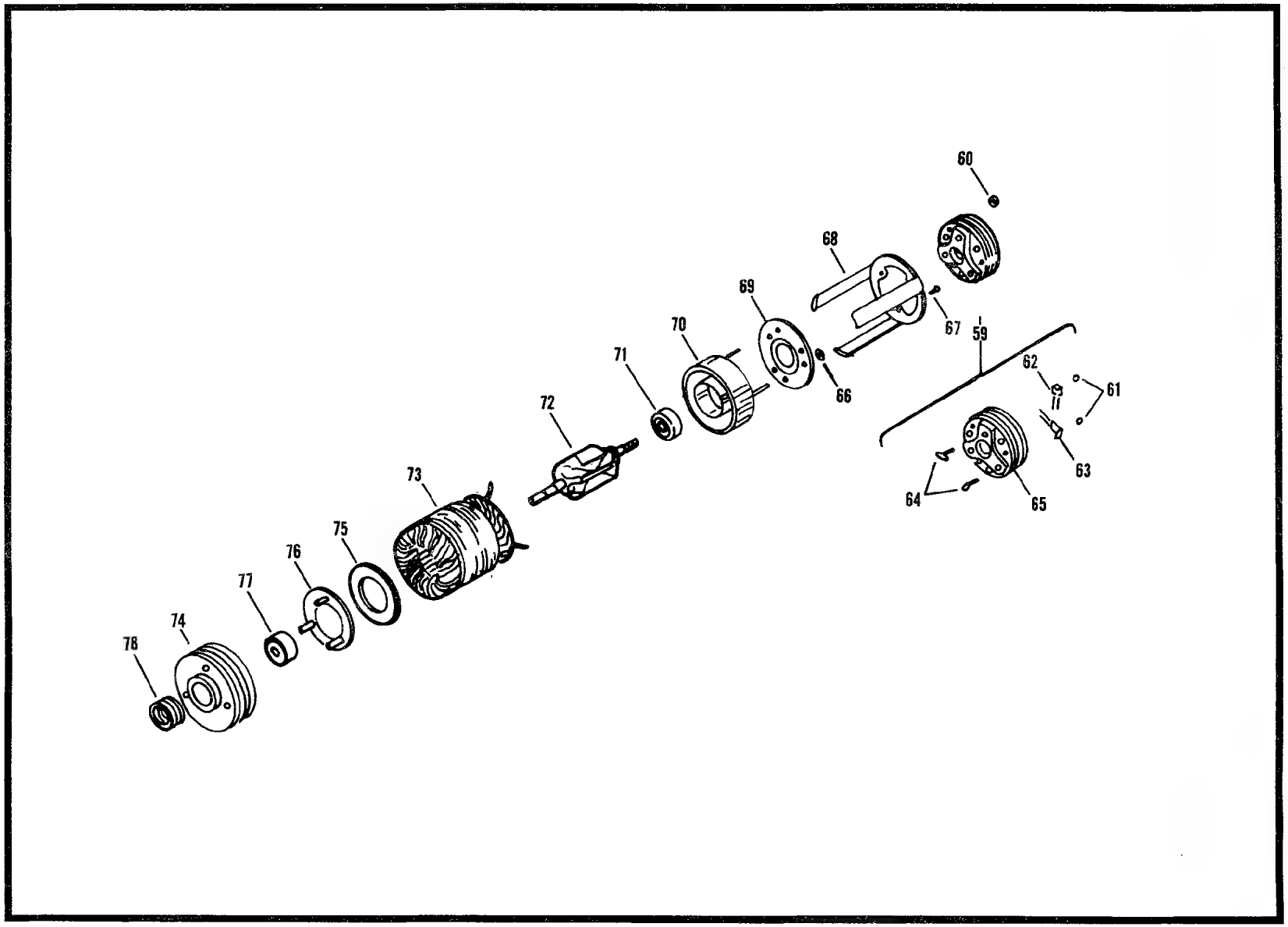

Figure 114R. Indicator, Heading (Synchro, Receiver) (Sheet 3 of 3)

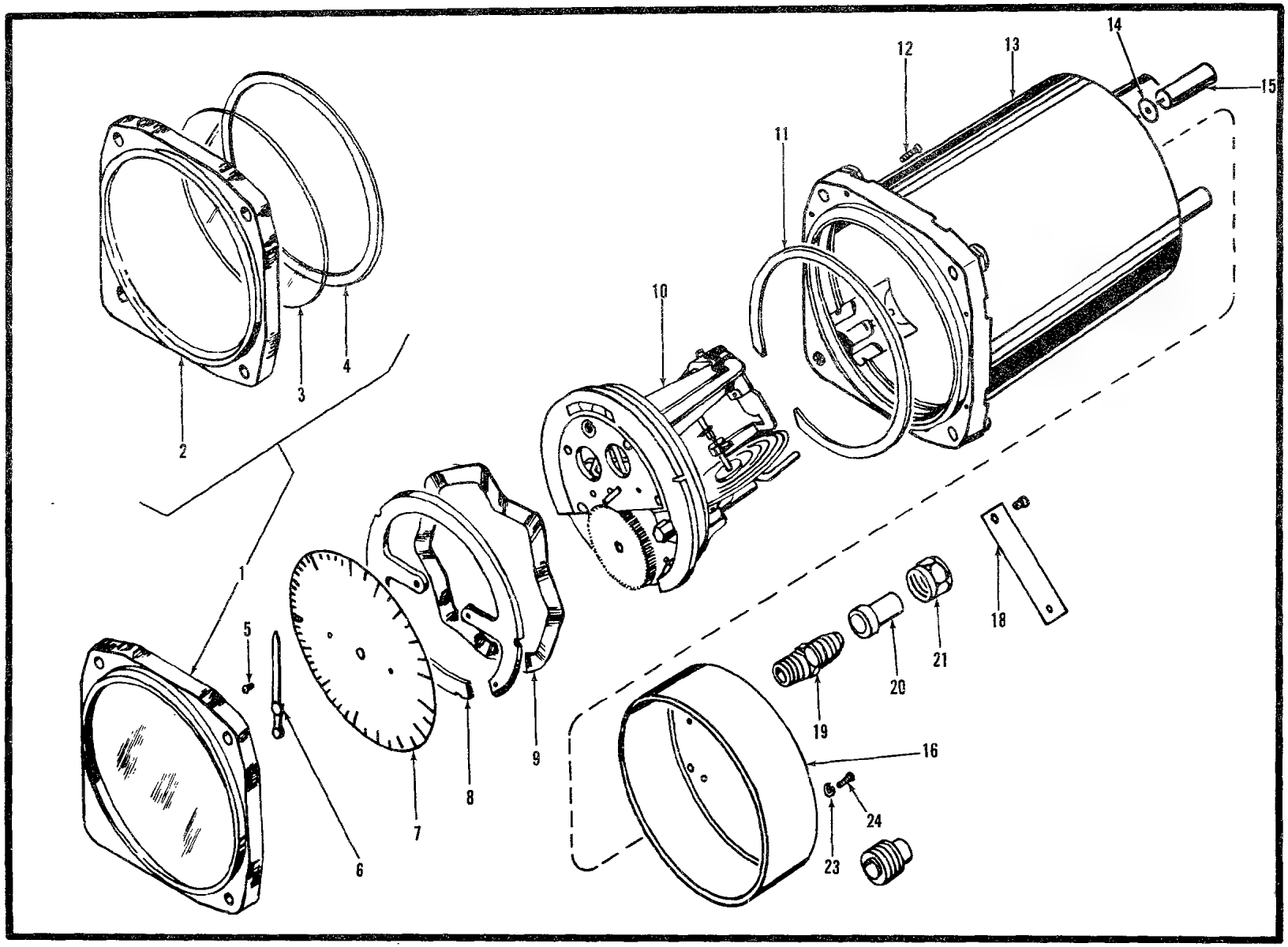

Figure 114S. Indicator, Vertical Velocity (Sheet 1 of 3)

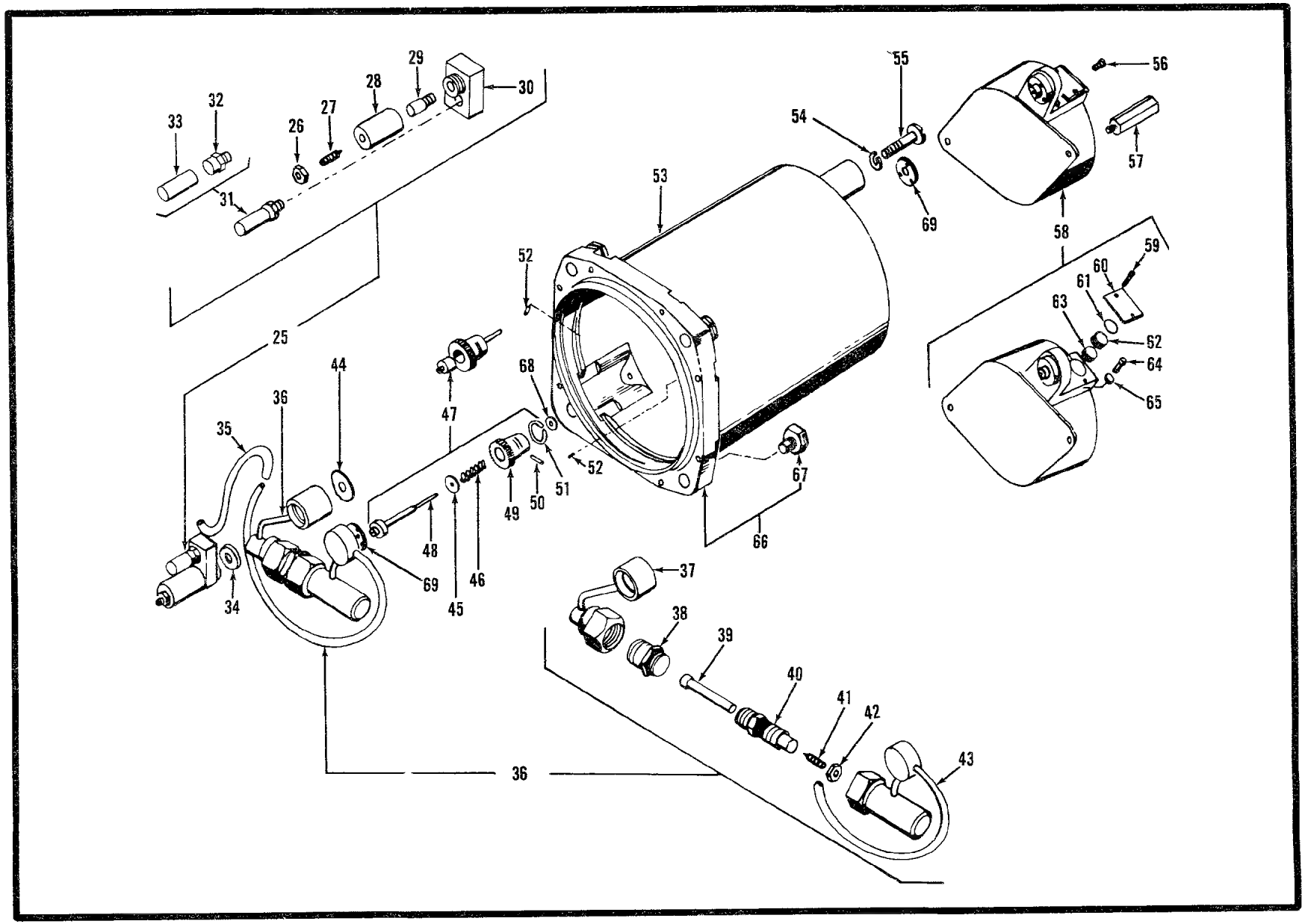

Figure 114S. Indicator, Vertical Velocity (Case Assembly) (Sheet 2 of 3)

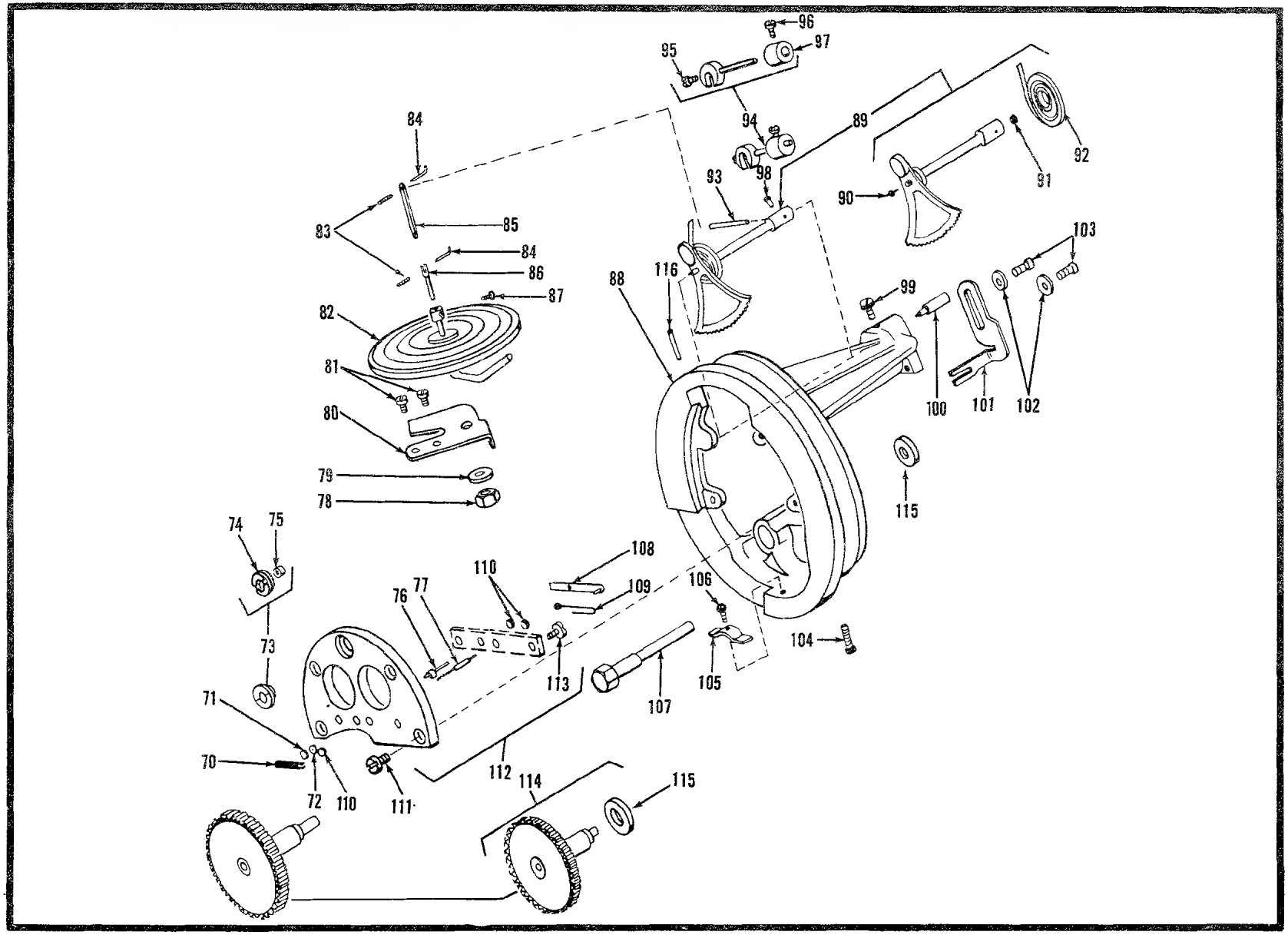

Figure 114S. Indicator, Vertical Velocity (Mechanism Assembly) (Sheet 3 of 3)

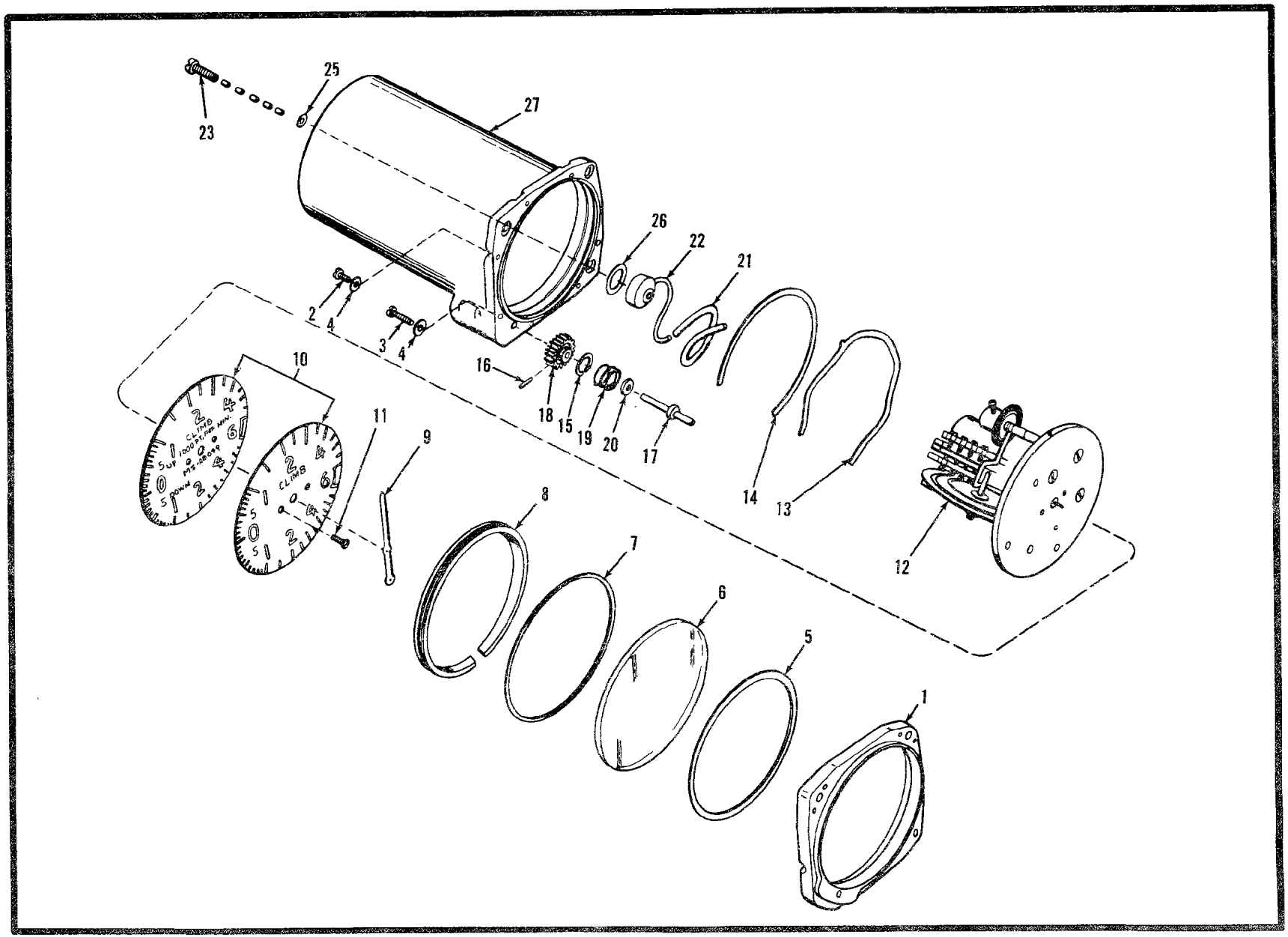

Figure 114T. Indicator, Vertical Velocity (Sheet 1 of 2)

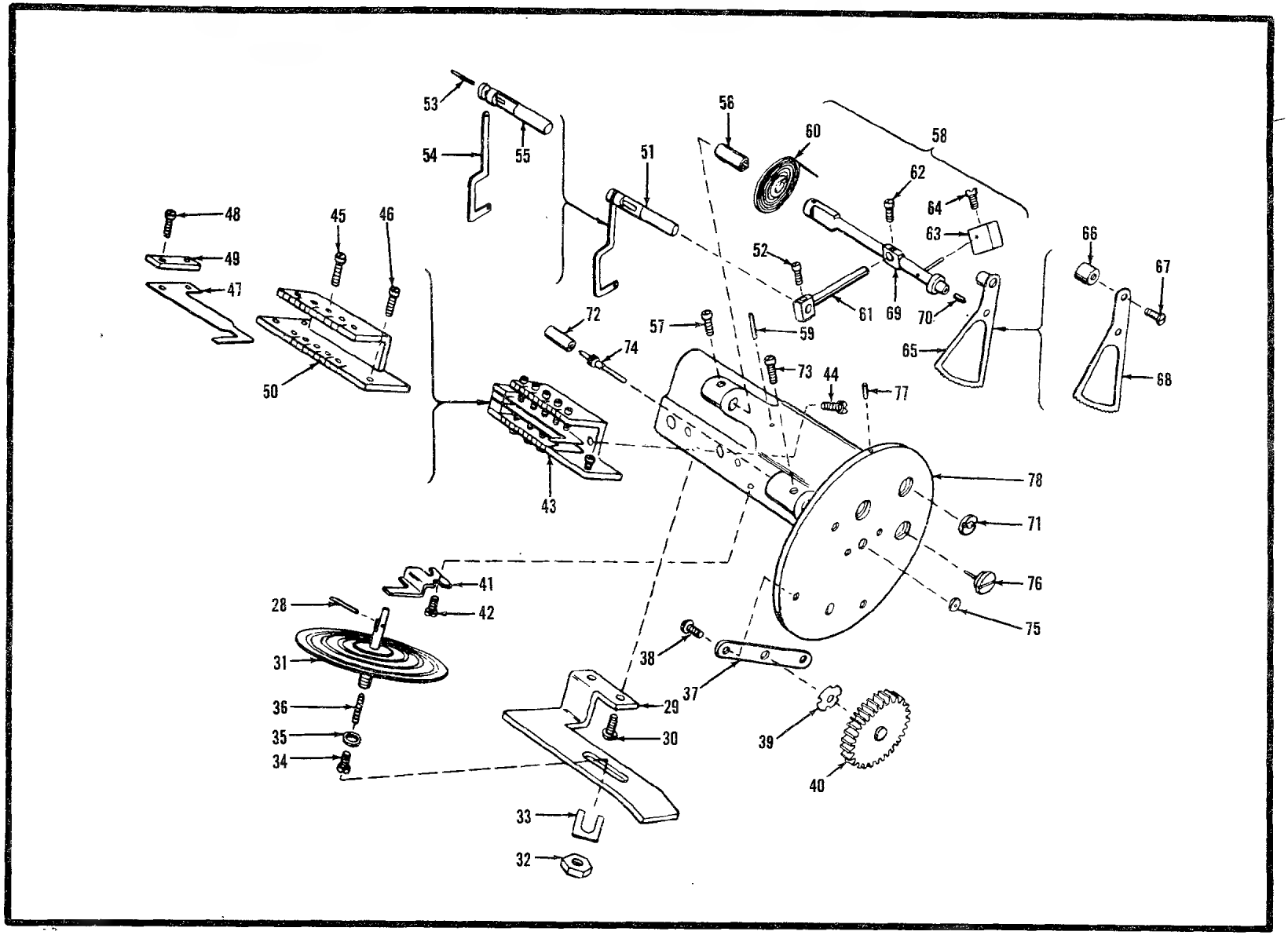

Figure 114T. Indicator, Vertical Velocity (Mechanism Assembly) (Sheet 2 of 2)

Figures 114U thru 114Z Not Used In TM 55-1520-202-35P

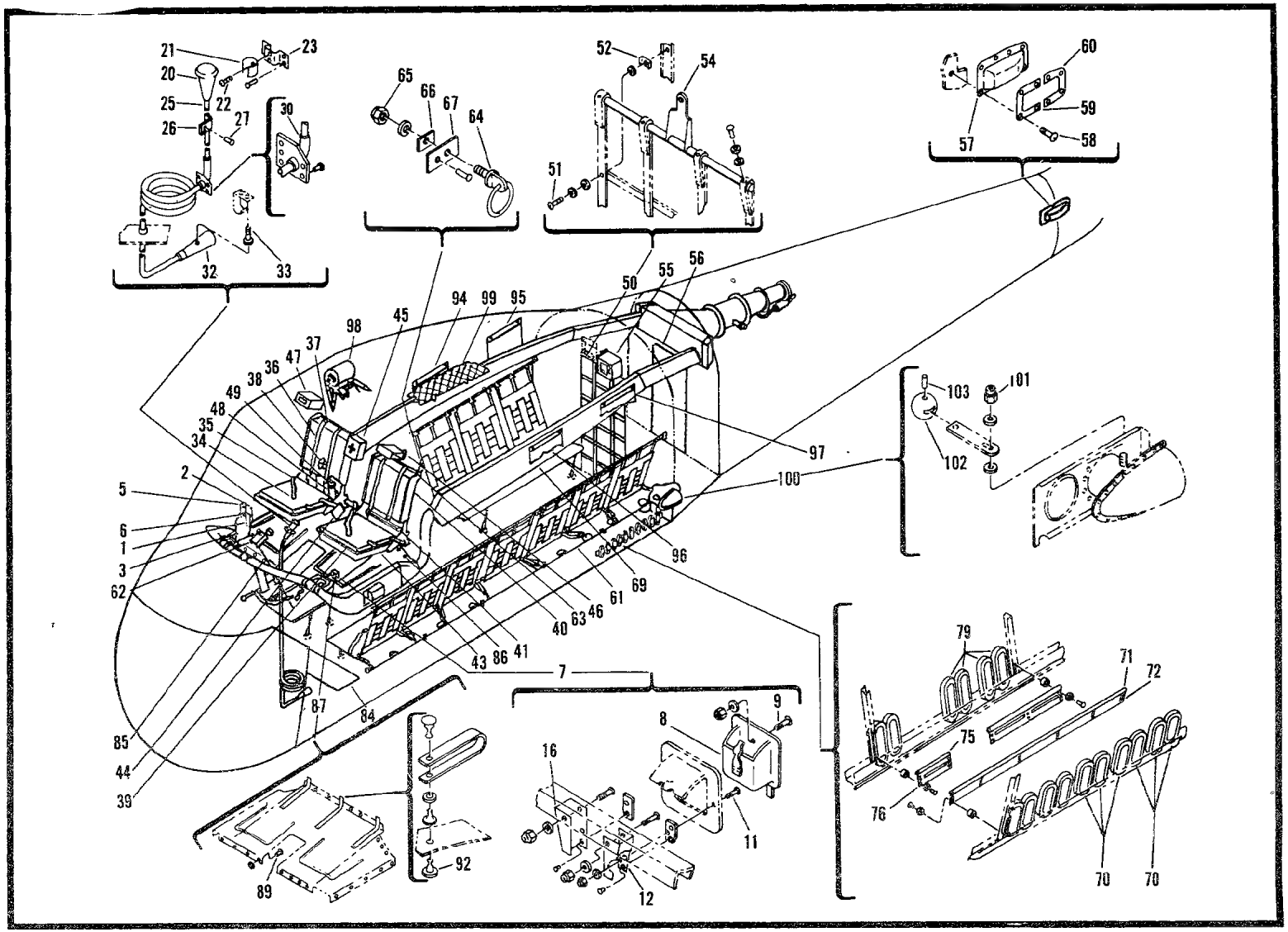

Figure 115. Furnishings Installation

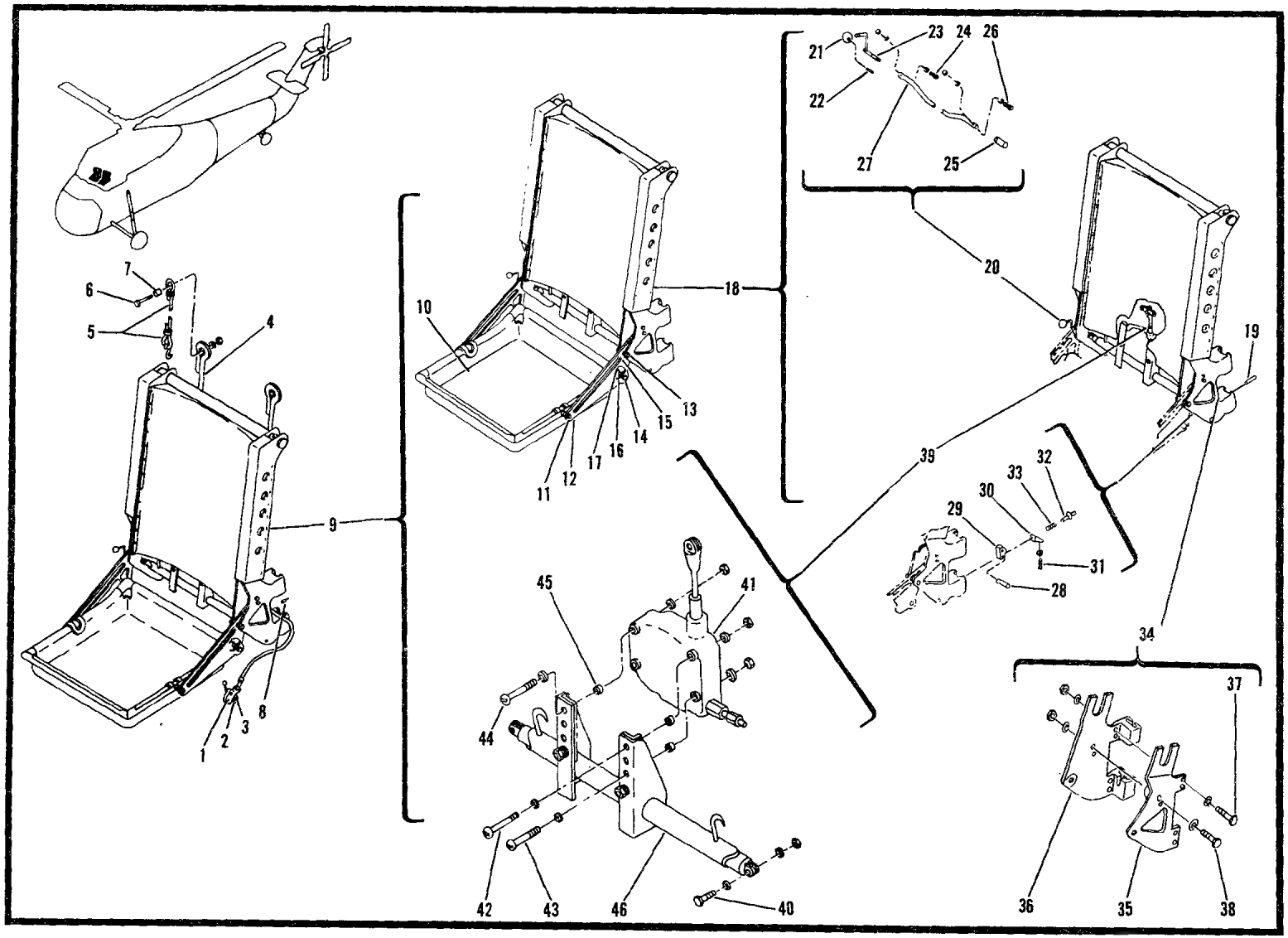

Figure 116. Pilot and Co-Pilots Seat Installation

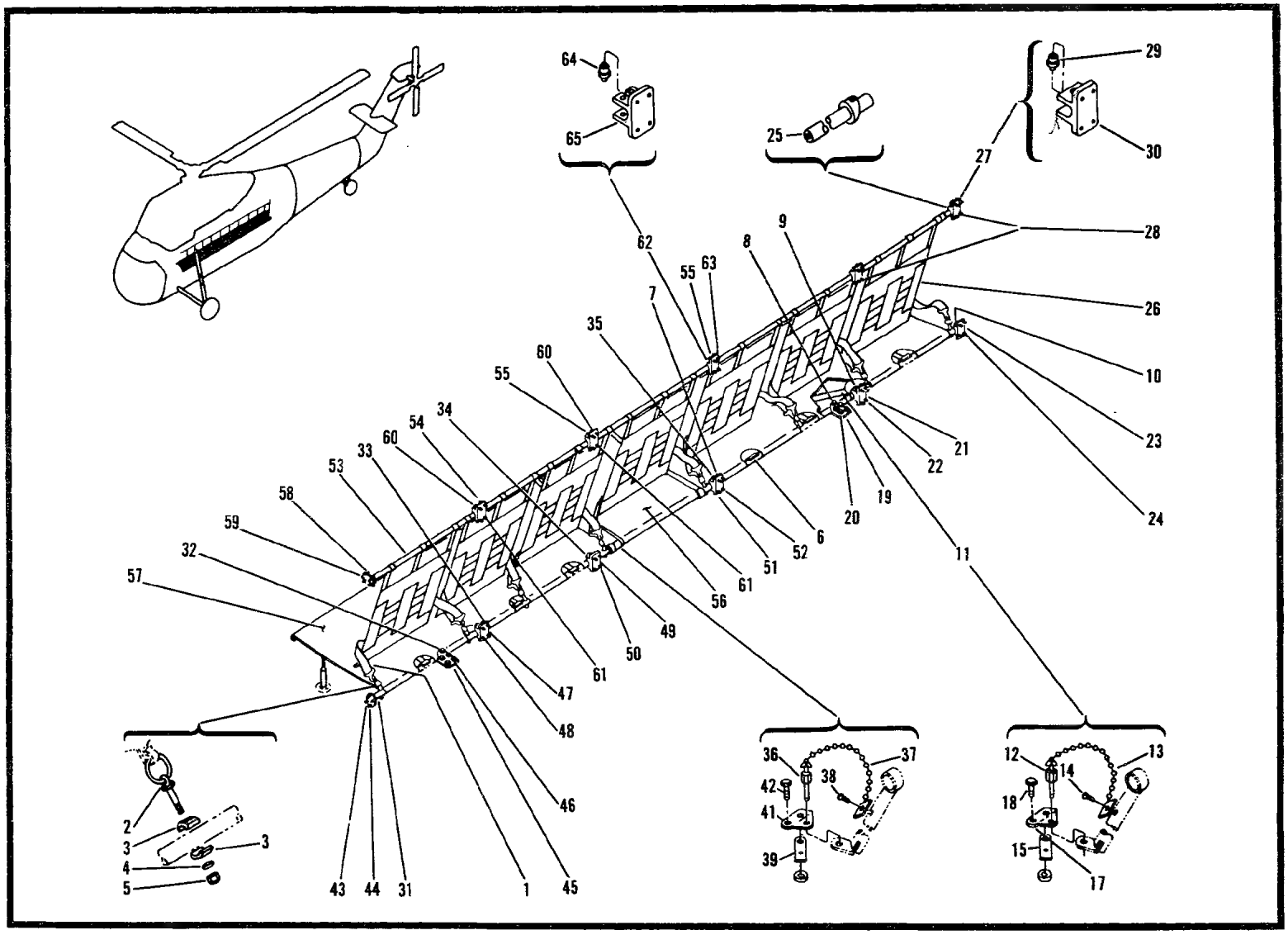

Figure 117 Troop Seat Installation (USBL EFF 53-4475 thru 56-4312)(Sheet 1 of 2)

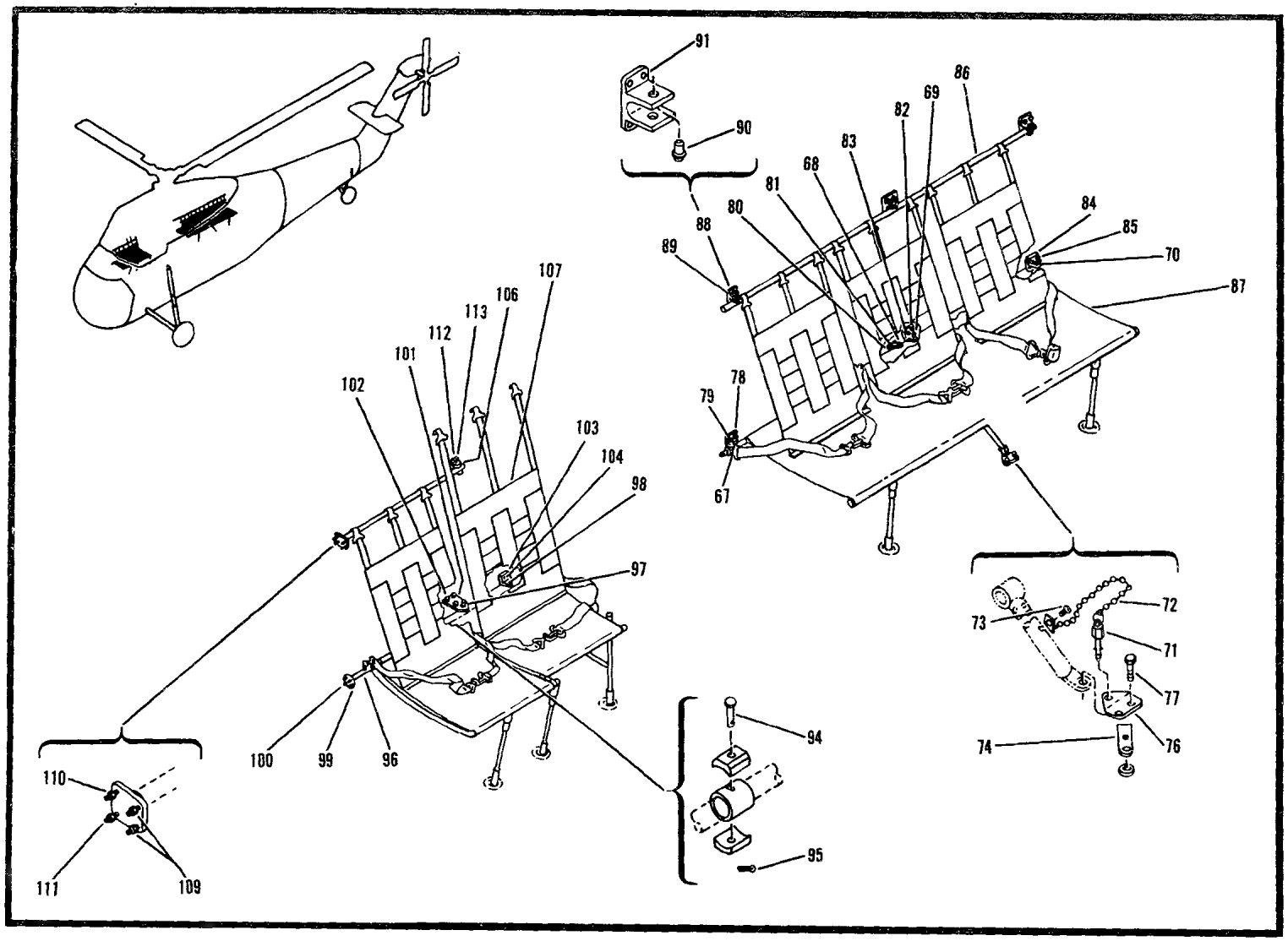

Figure 117. Troop Seat Installation (USBL EFF 53-4475 thru 56-4312)(Sheet 2 of 2)

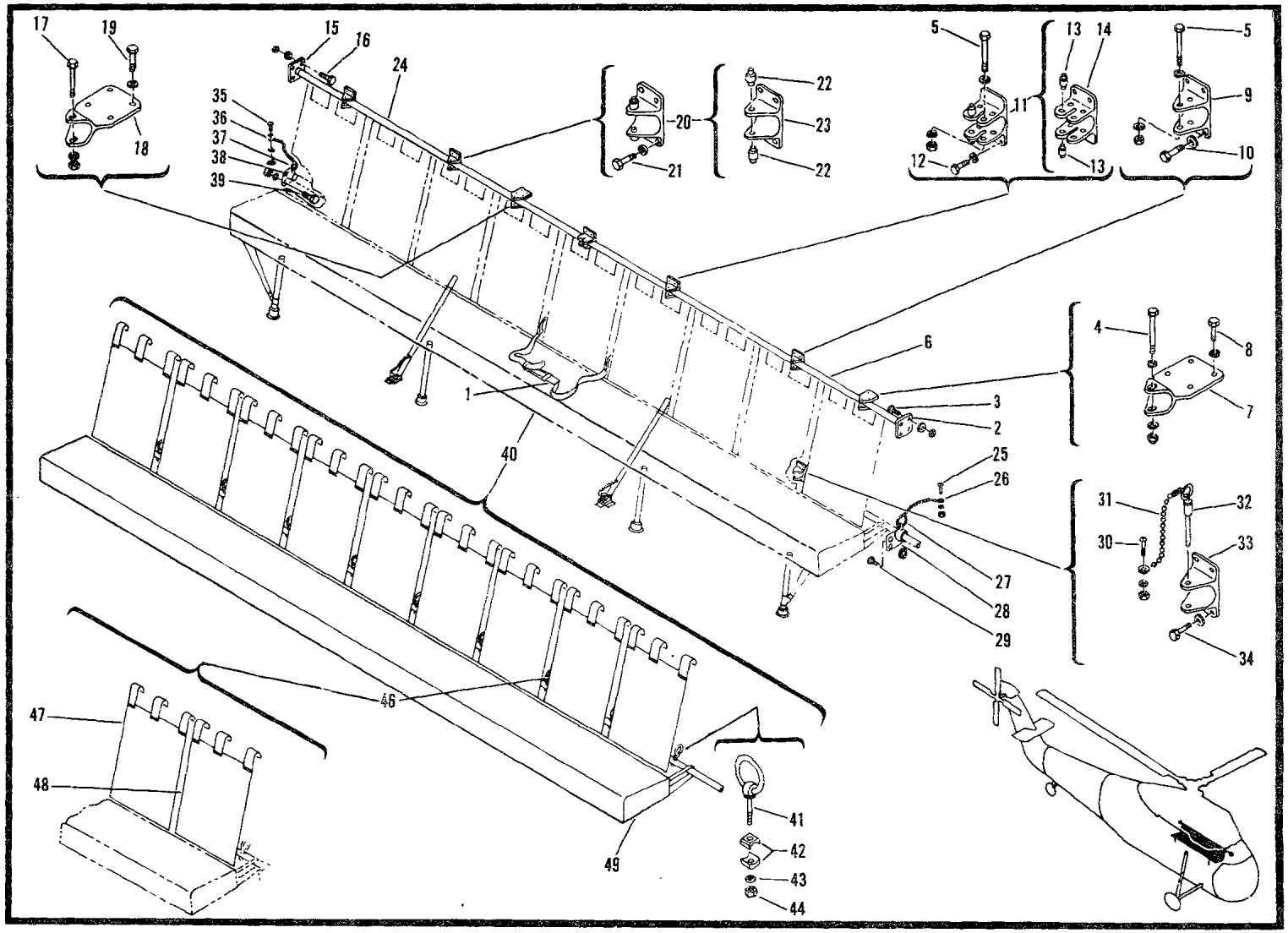

118. Troop Seat Installation (USBL EFF 56-4313 and Subsequent)(Sheet 1 of 4)

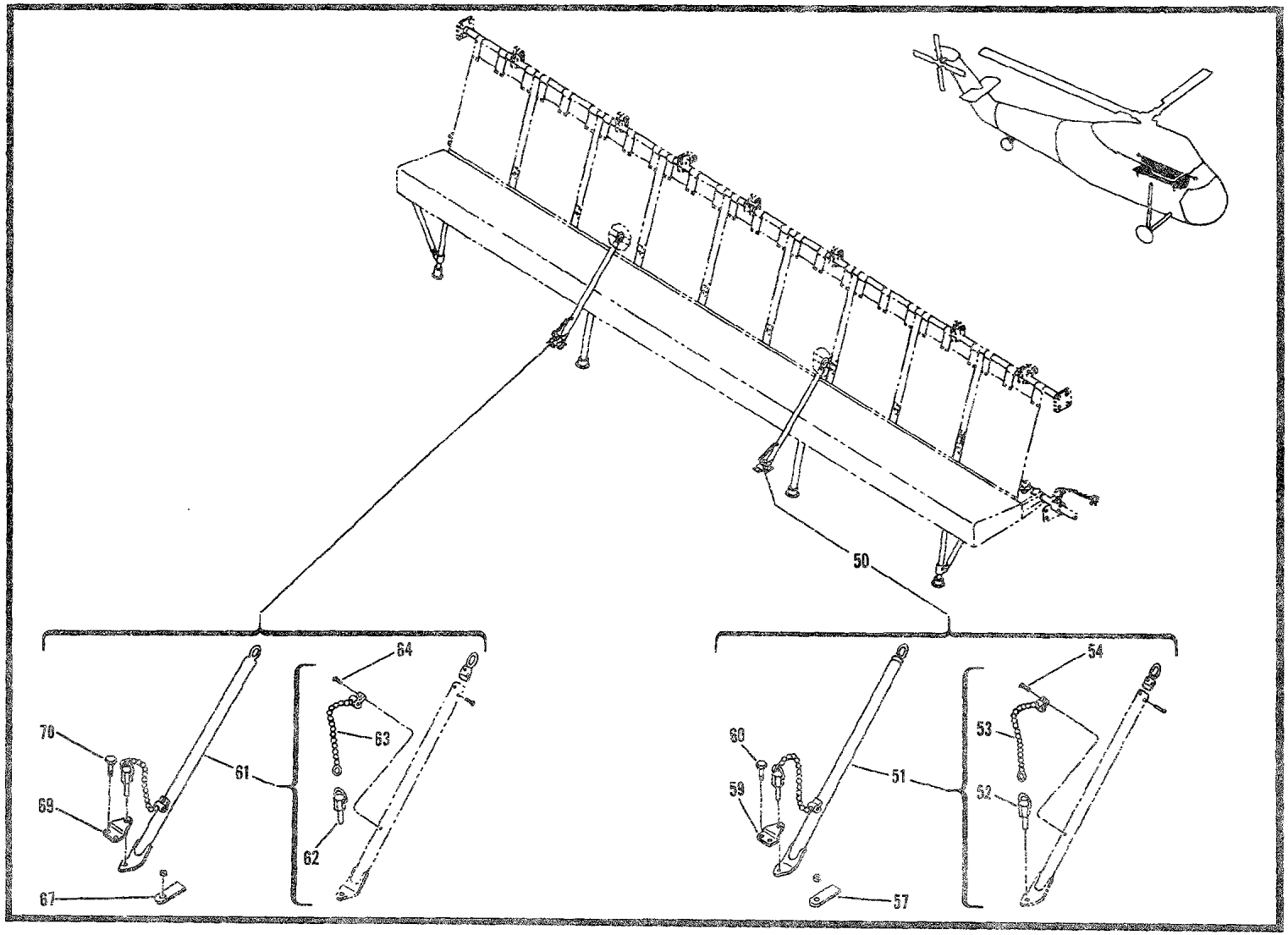

Figure 118. Troop Seat Installation (USBL EFF 56-4313 and Subsequent)
(Sheet 2 of 4)

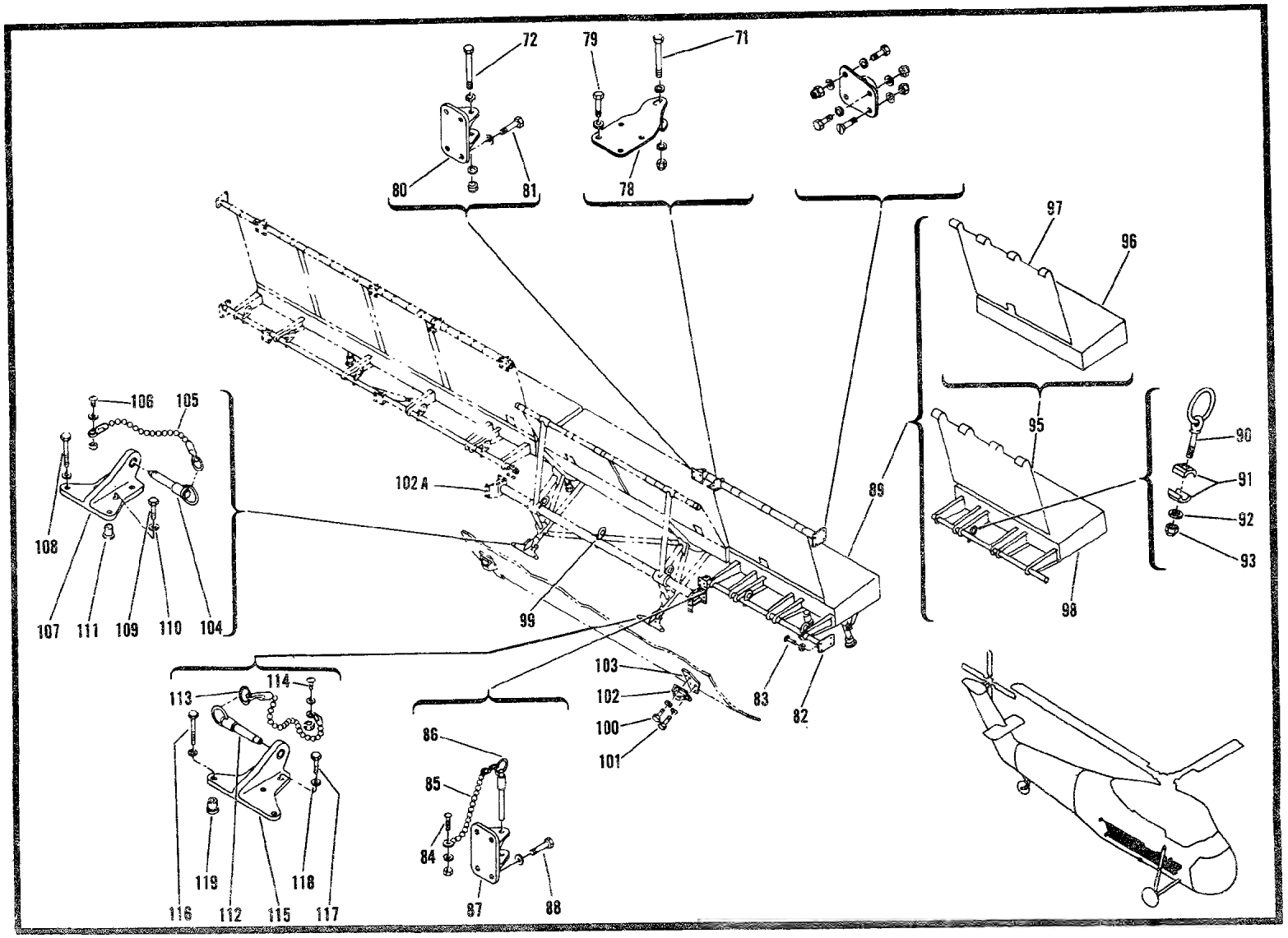

Figure 118. Troop Seat Installation (USBL EFF 56-4313 and Subsequent)(Sheet 3 of 4)

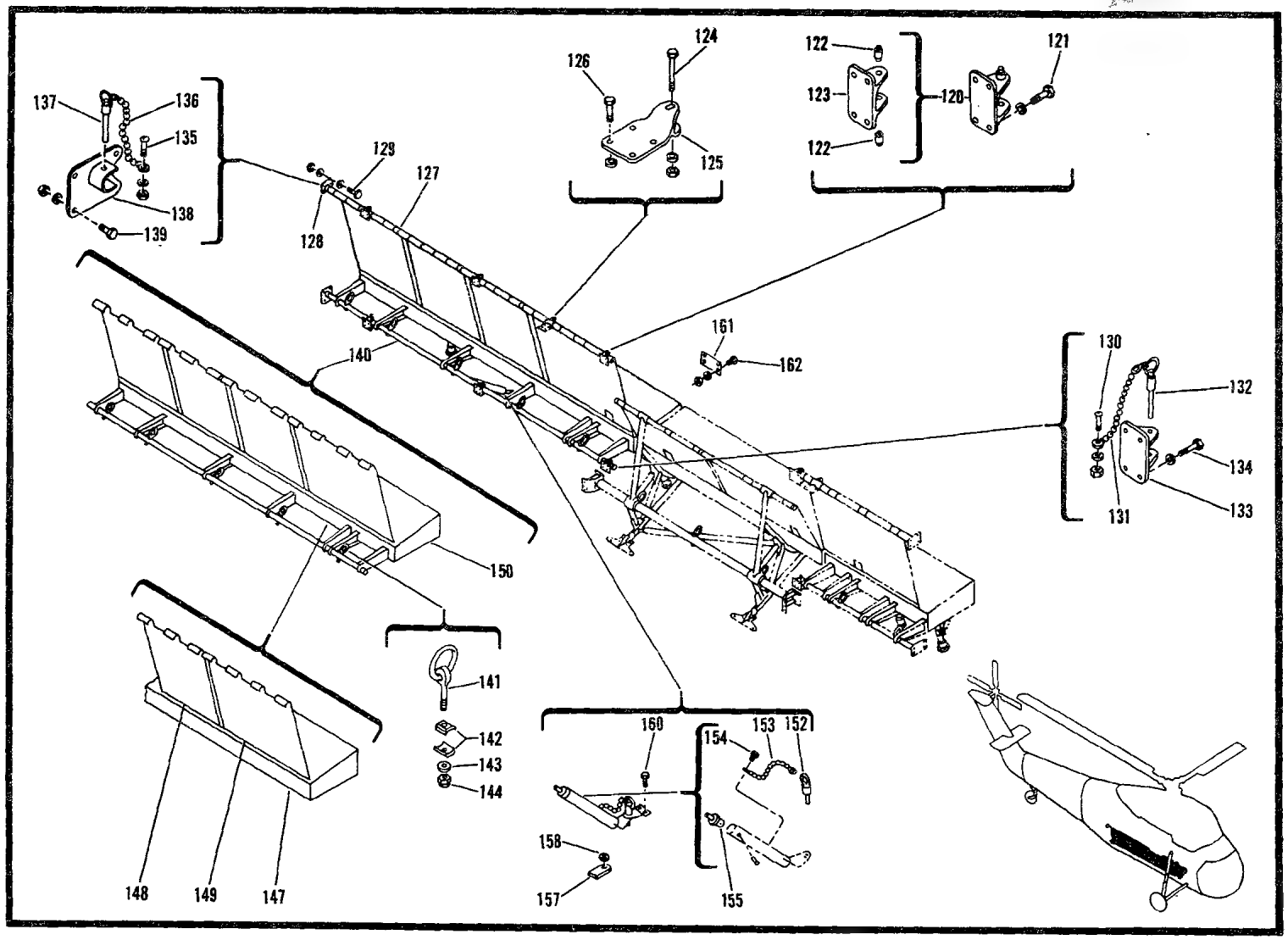

Figure 118. Troop Seat Installation (USBL EFF 56-4313 and Subsequent)(Sheet 4 of 4)

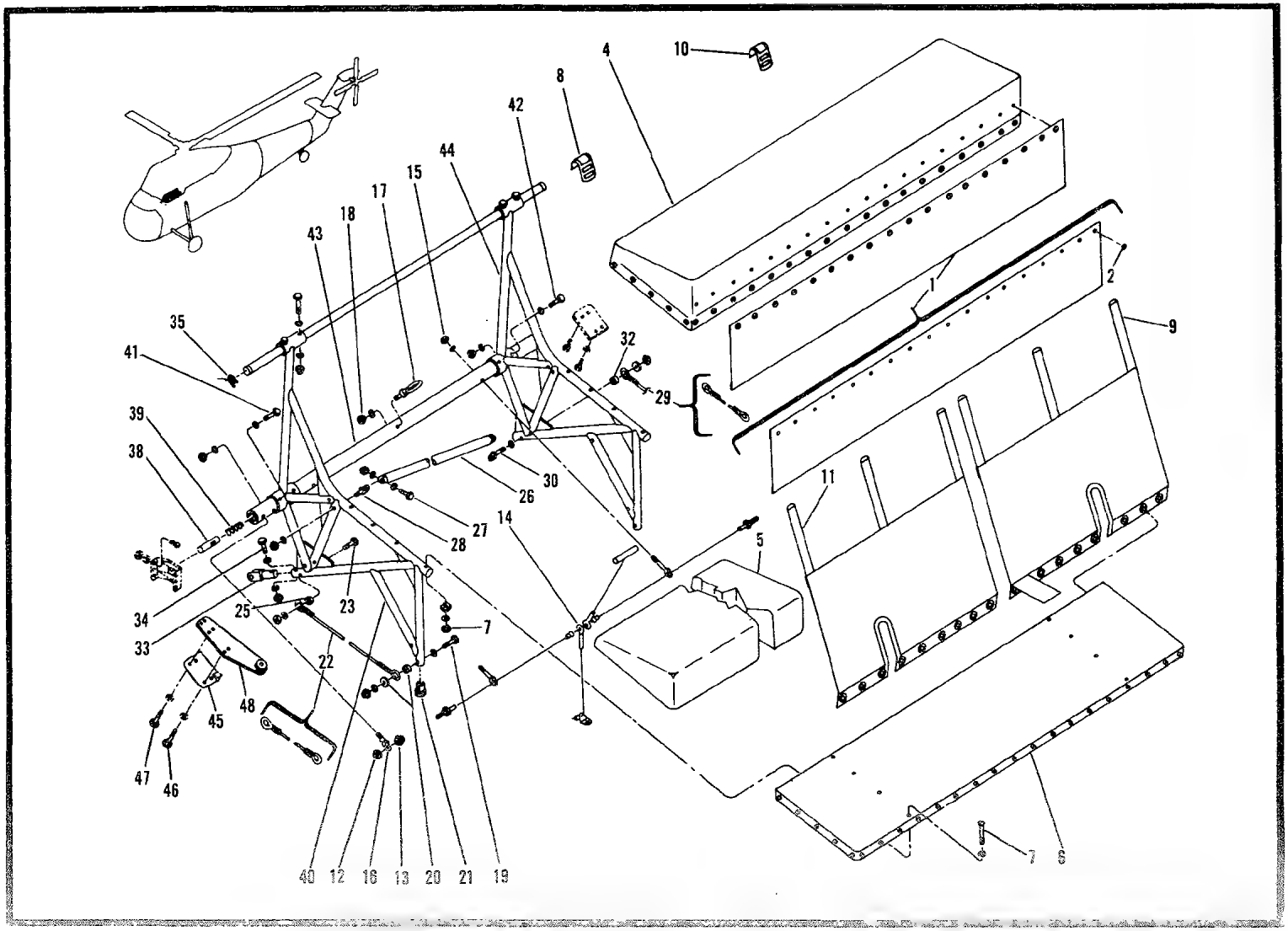

Figure 119. Step Assembly, Troop Seat (USBL EFF 56-43113 and Subsequent)

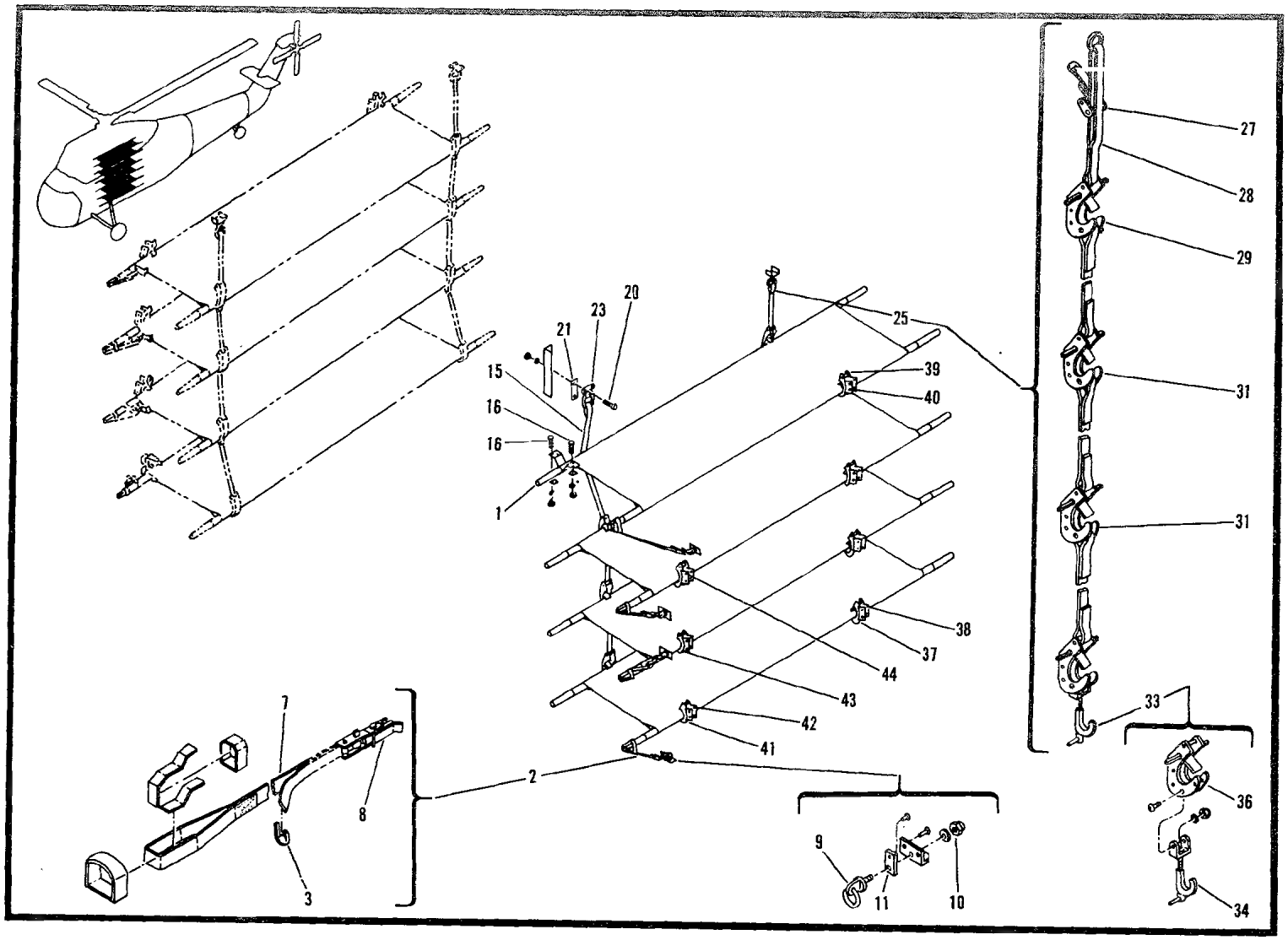

Figure 120. Litter Installation (Sheet 1 of 2)

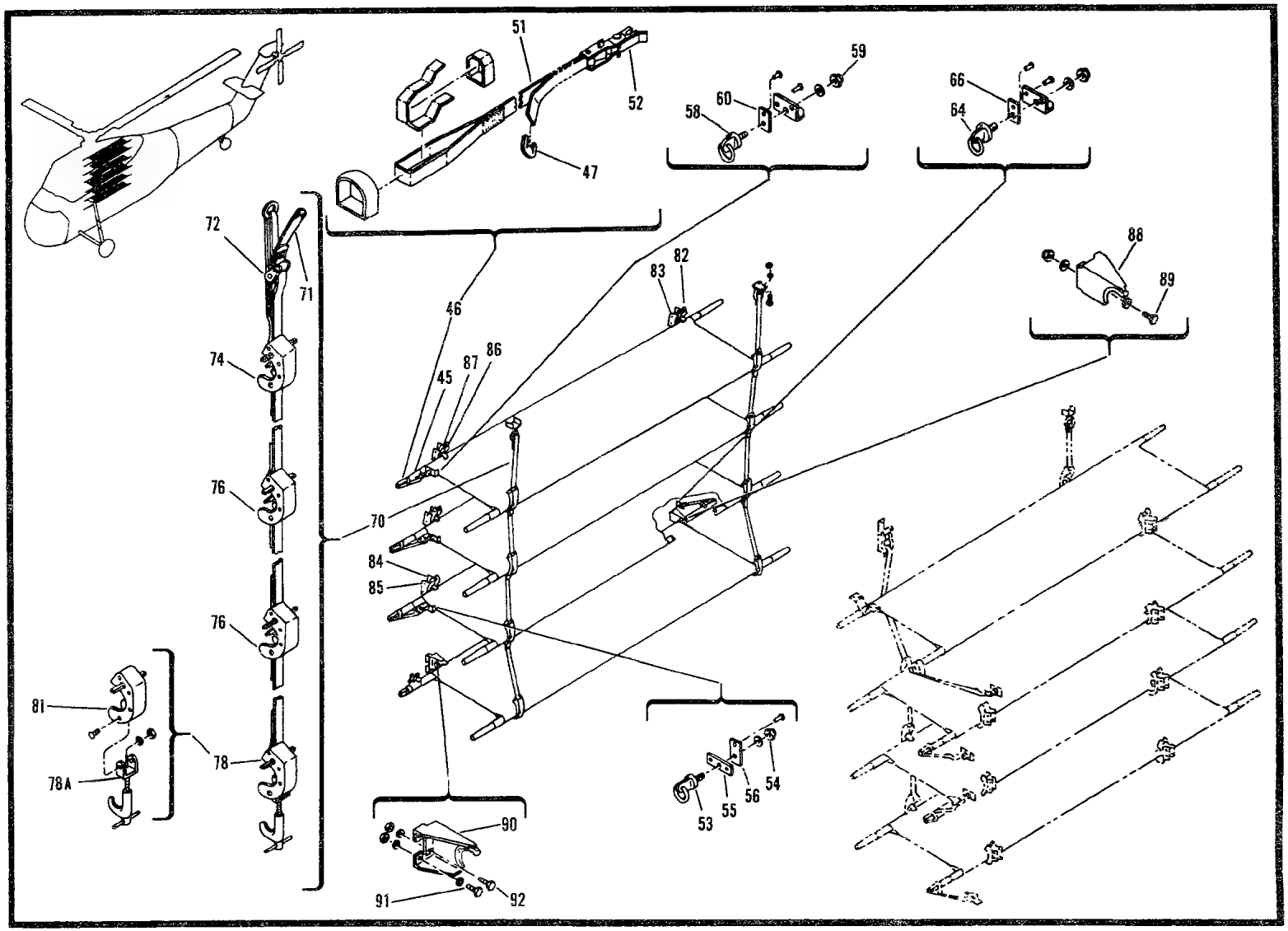

Figure 120 Litter Installation (Sheet 2 of 2)

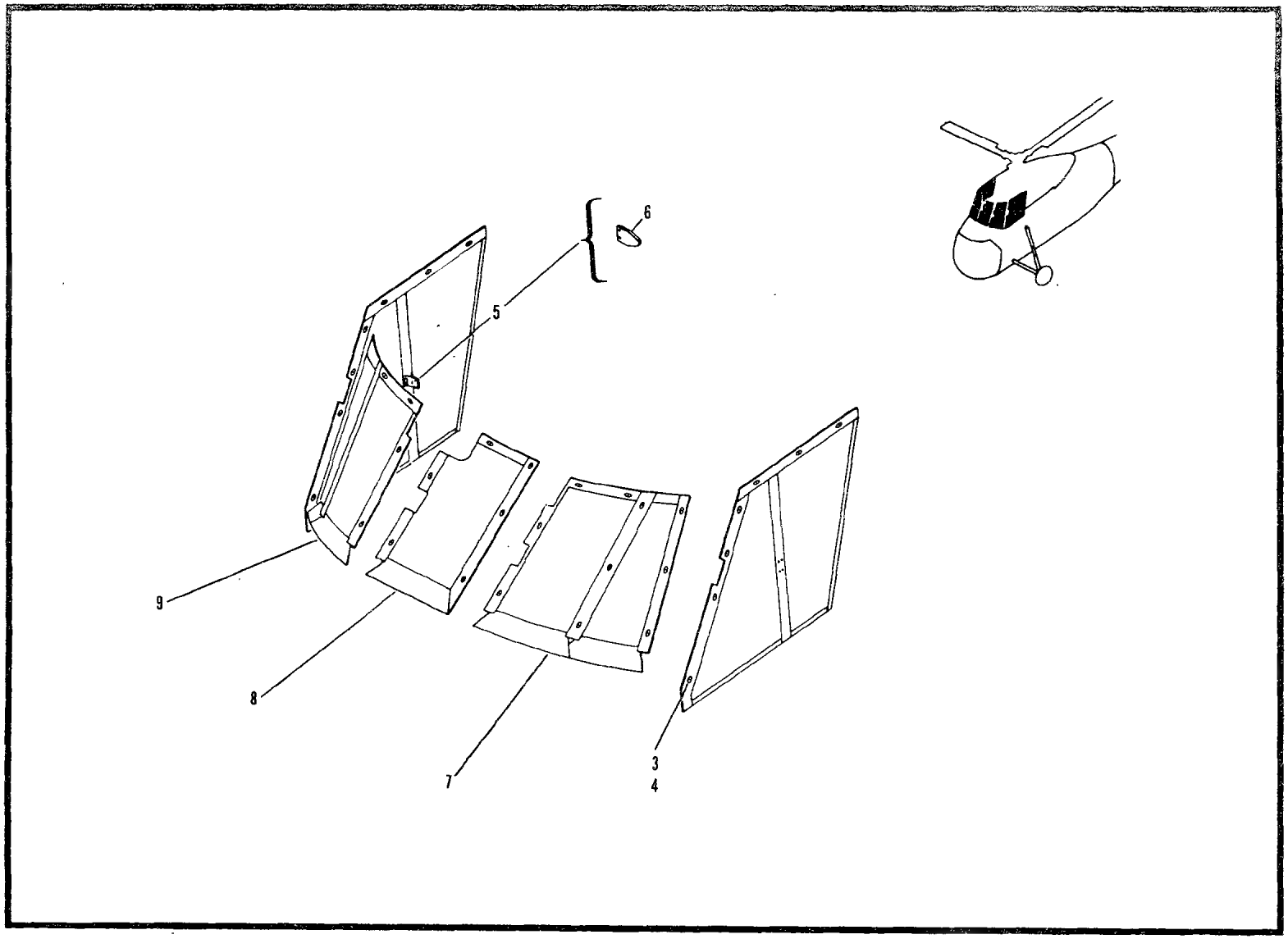

Figure 121 Blind Flying Panel Installation

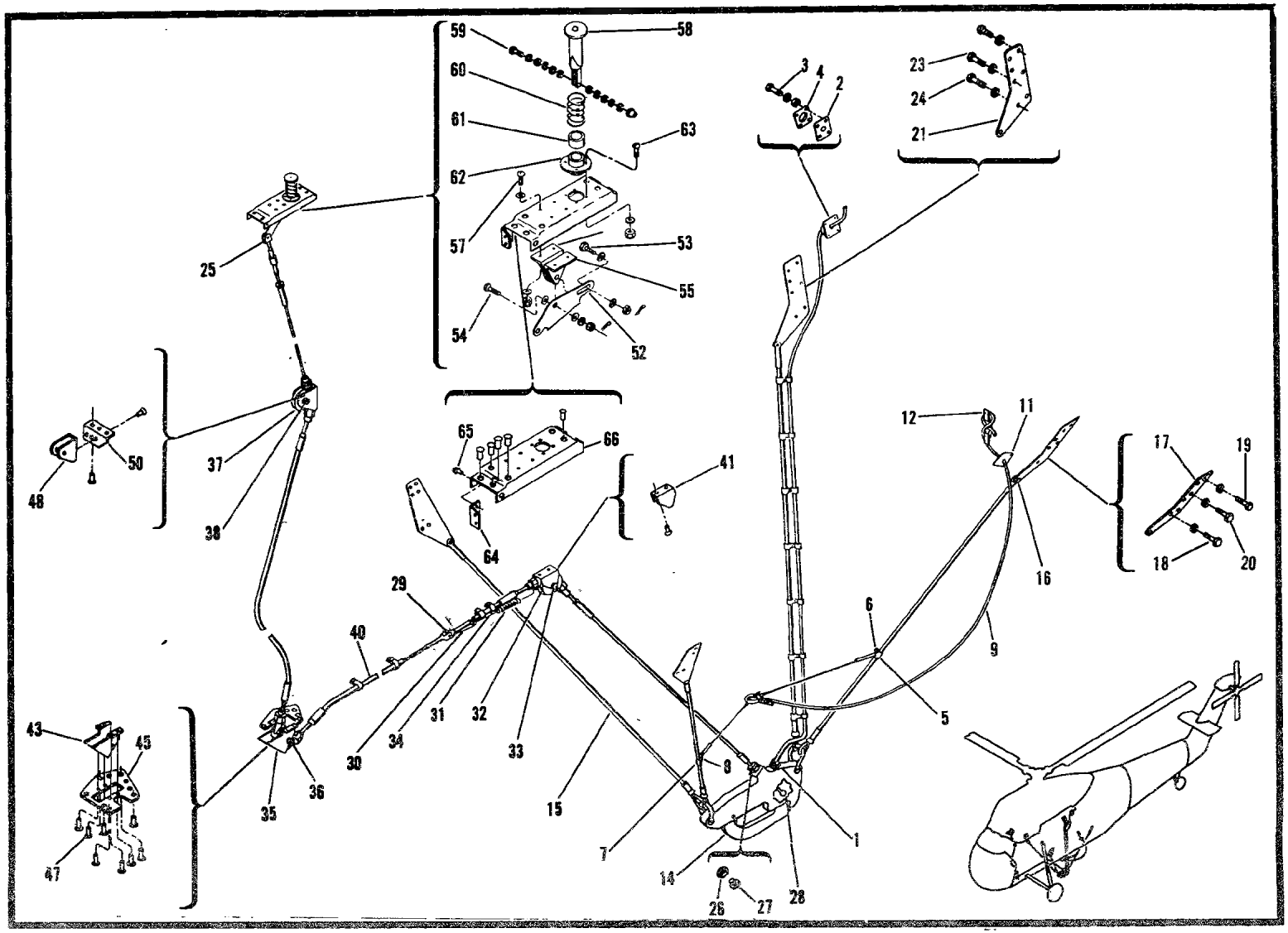

Figure 122. Cargo Sling Installation

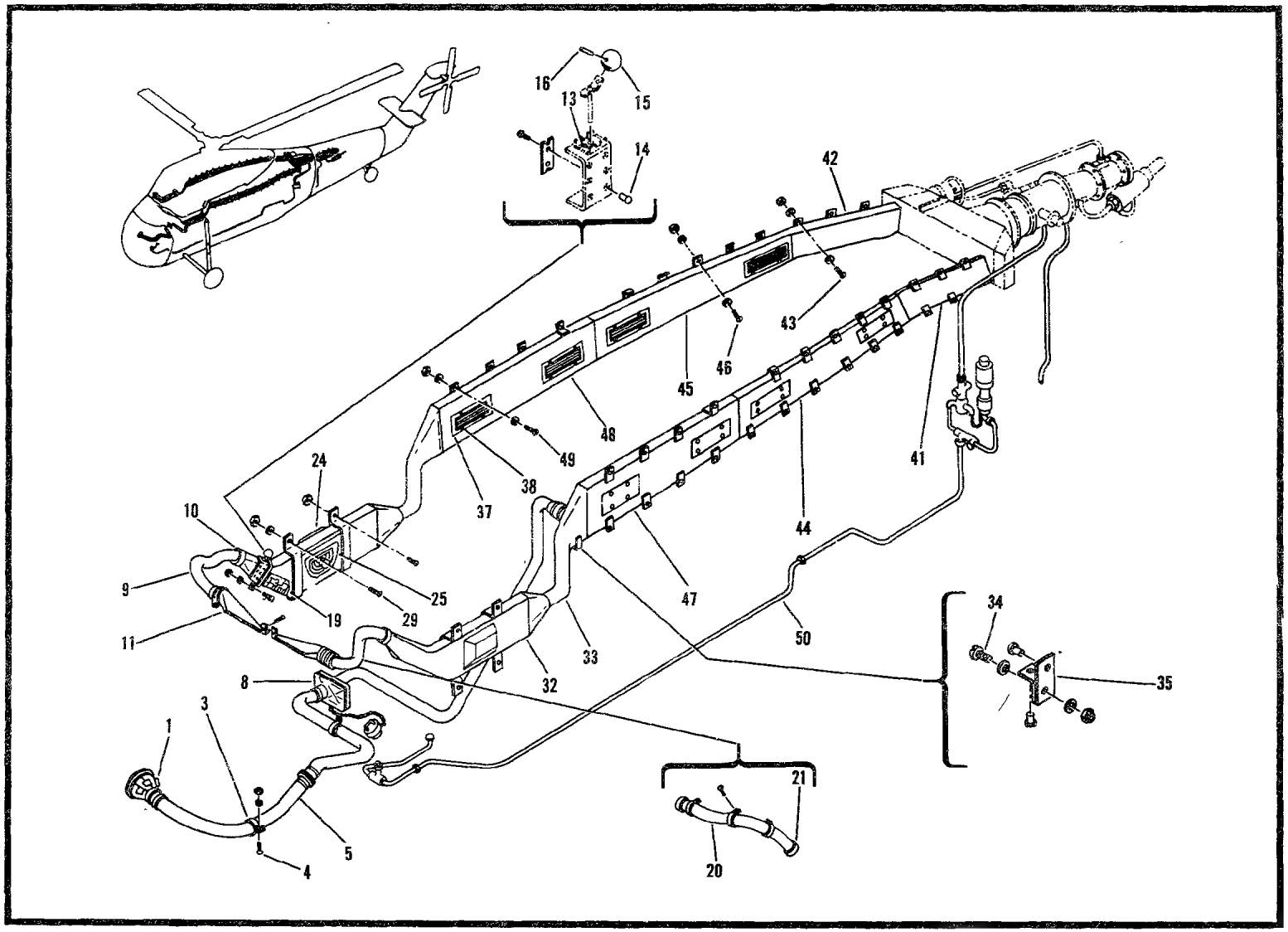

Figure 123. Heating System Installation (Sheet 1 of 2)

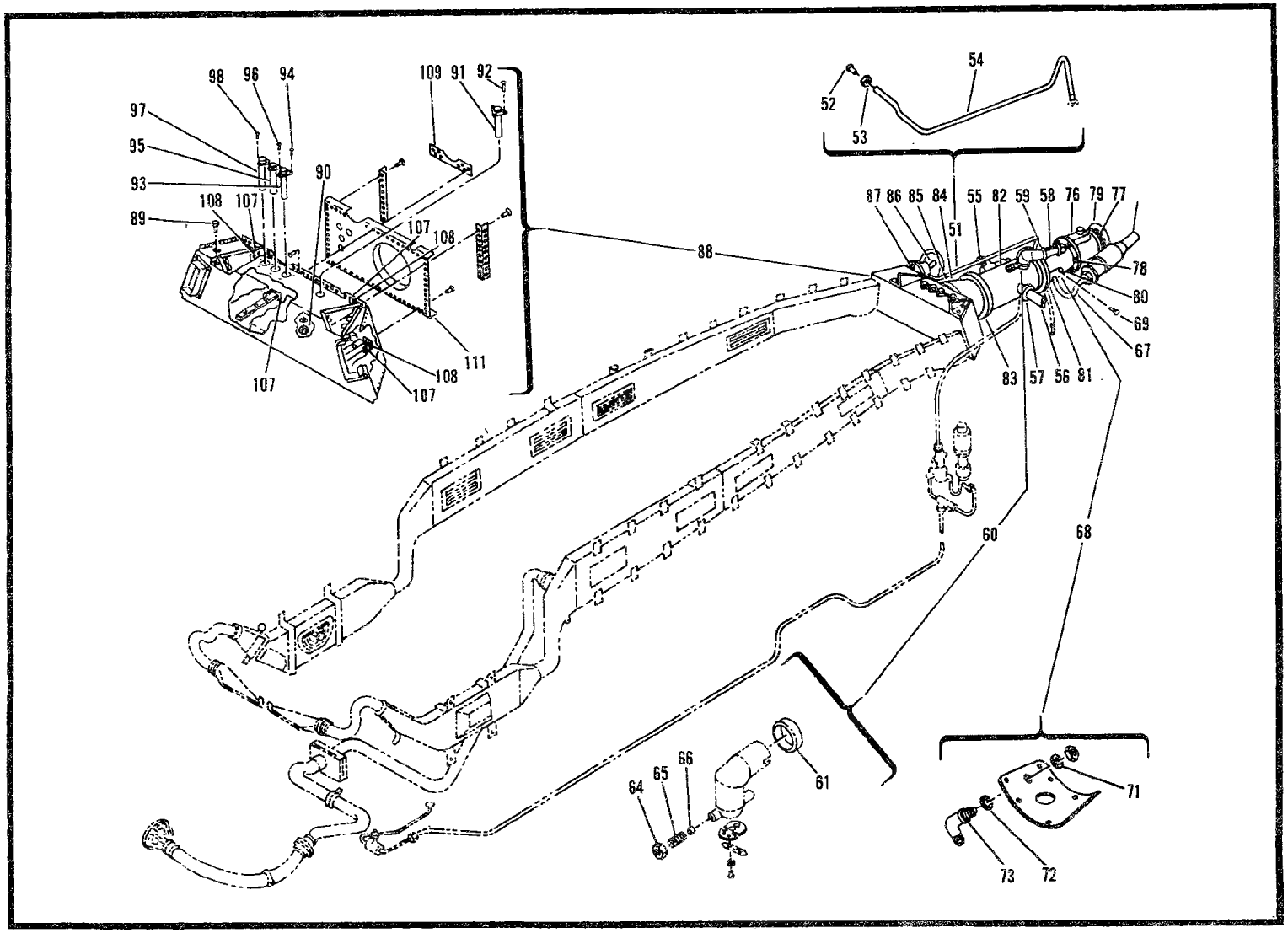

Figure 123. Heating System Installation (Sheet 2 of 2)

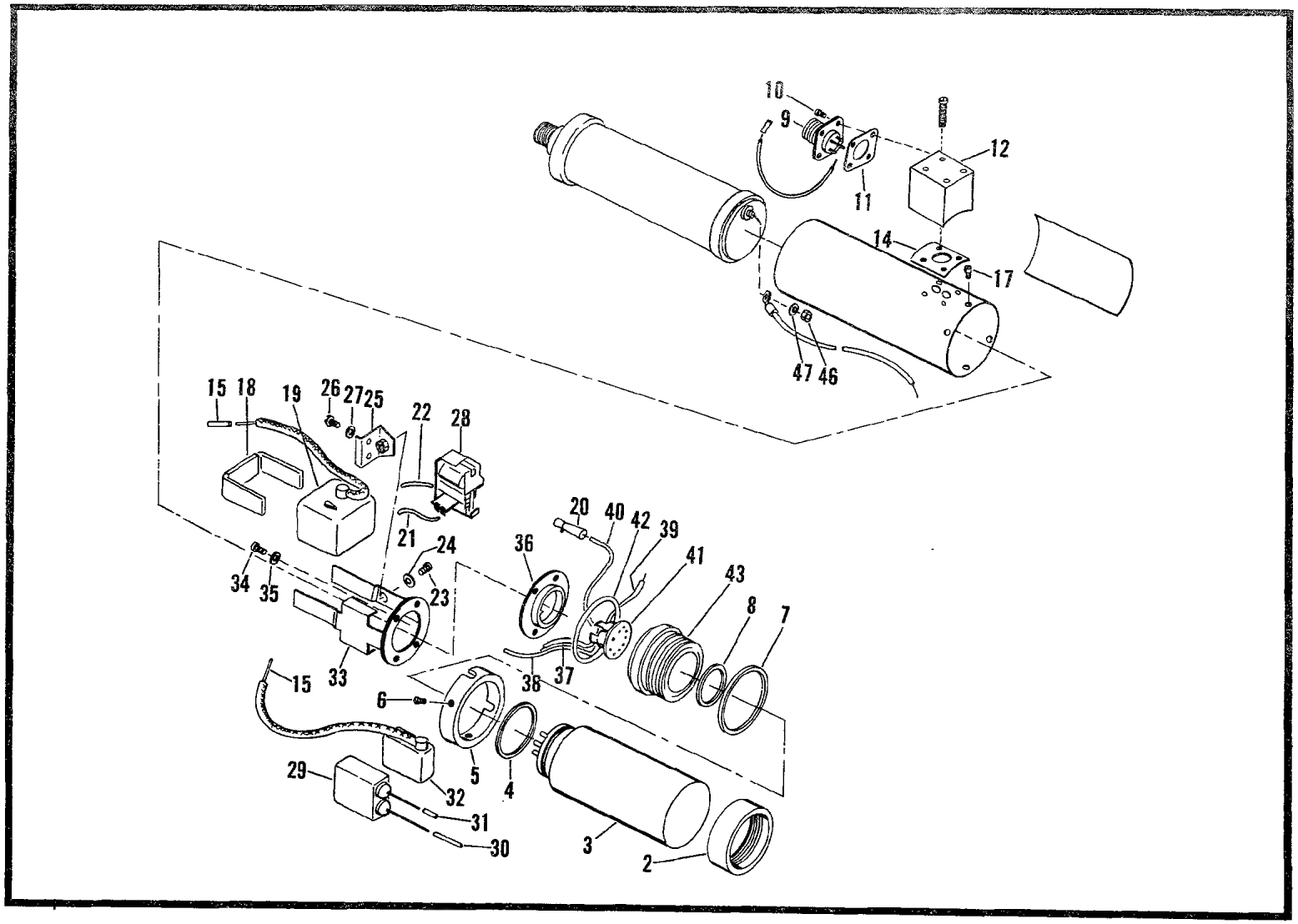

Figure 123A. Ignition Assembly

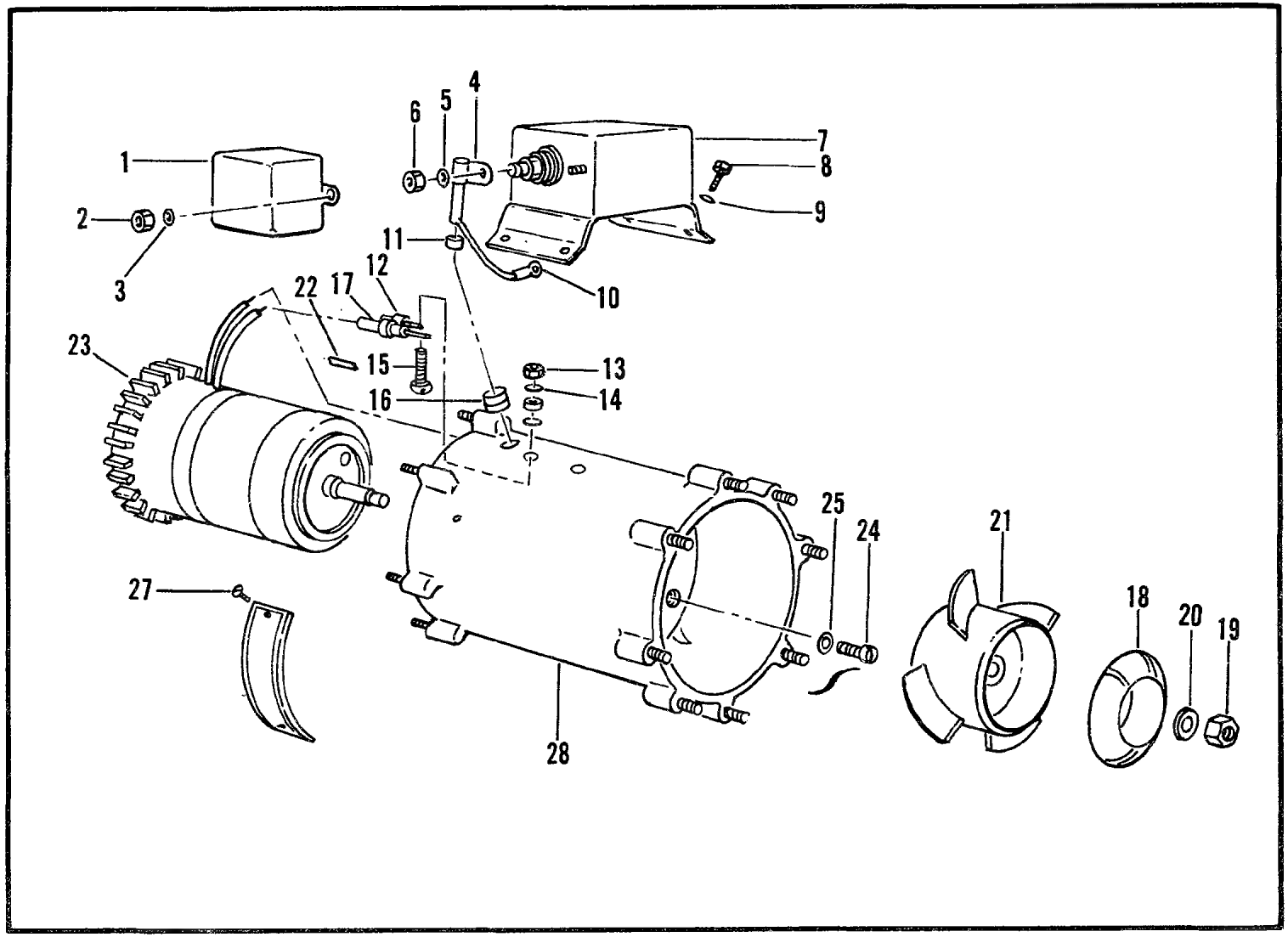

Figure 123B. Fan, Vane, Axial (Sheet 1 of 2)

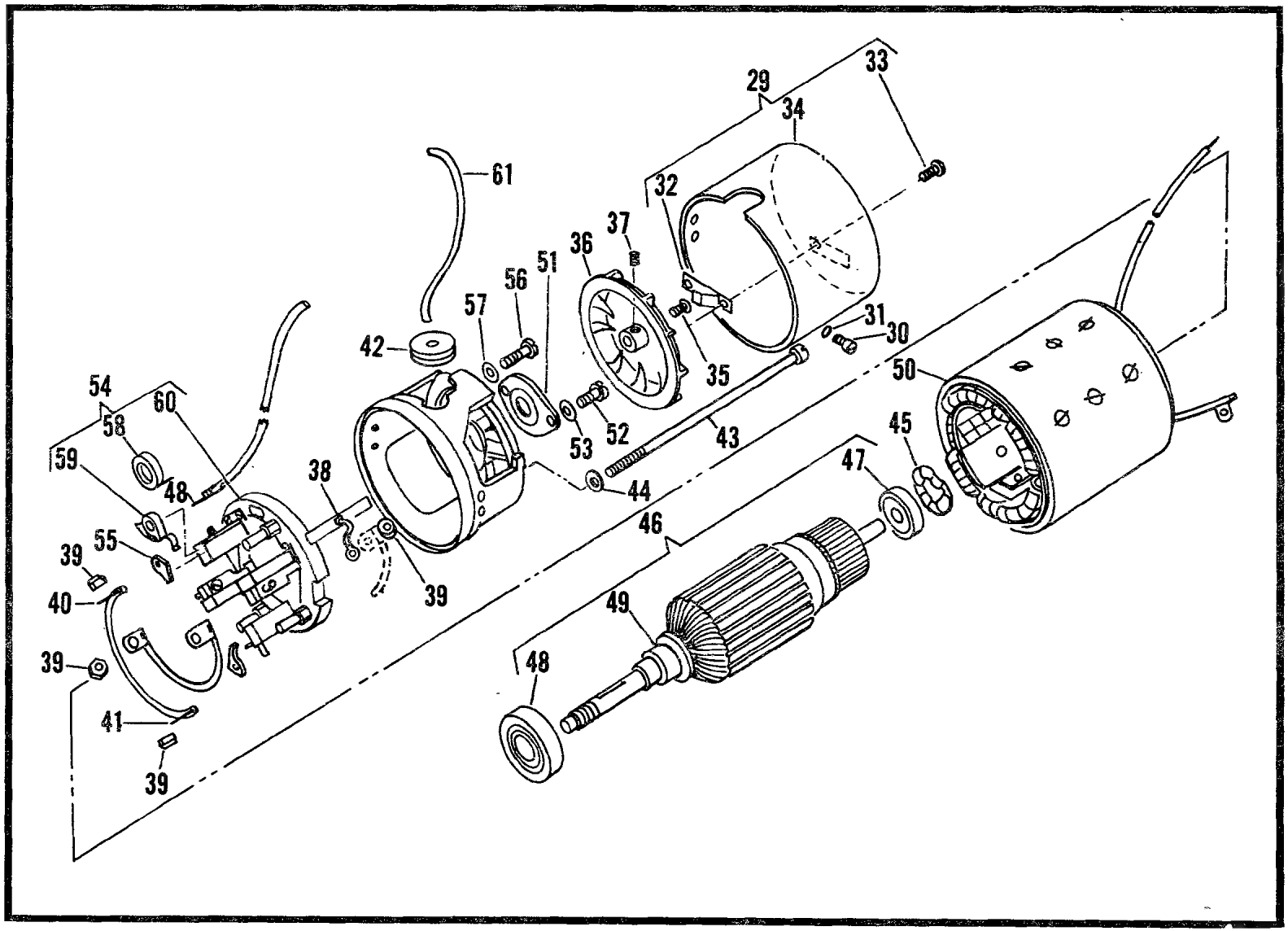

Figure 123B. Fan, Vane, Axial (Motor, Direct Current, Electric)(Sheet 2 of 2)

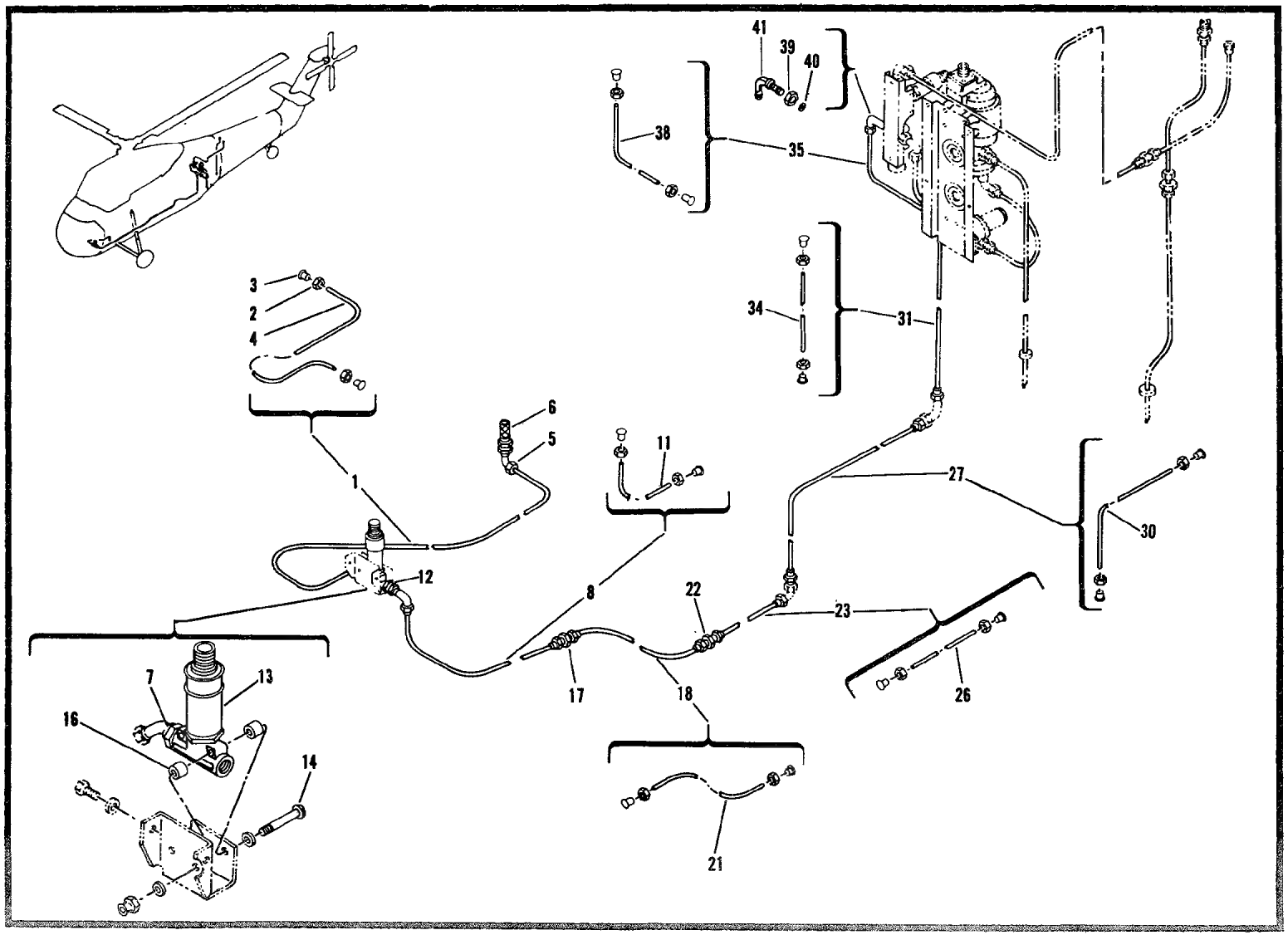

Figure 124. Heating System, Fuel System Installation (Sheet 1 of 2)

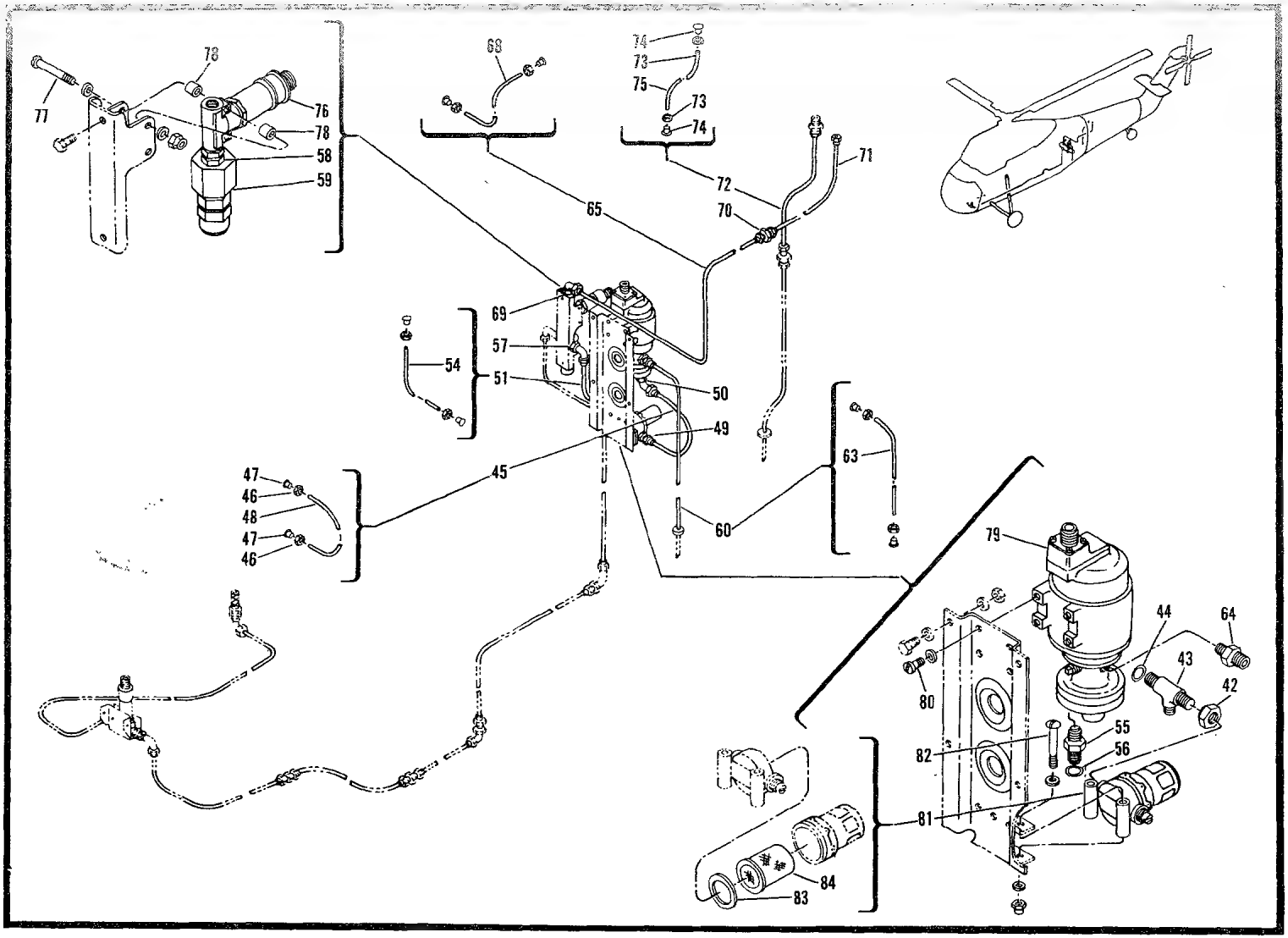

Figure 124. Heating System, Fuel System Installation (Sheet 2 of 2)

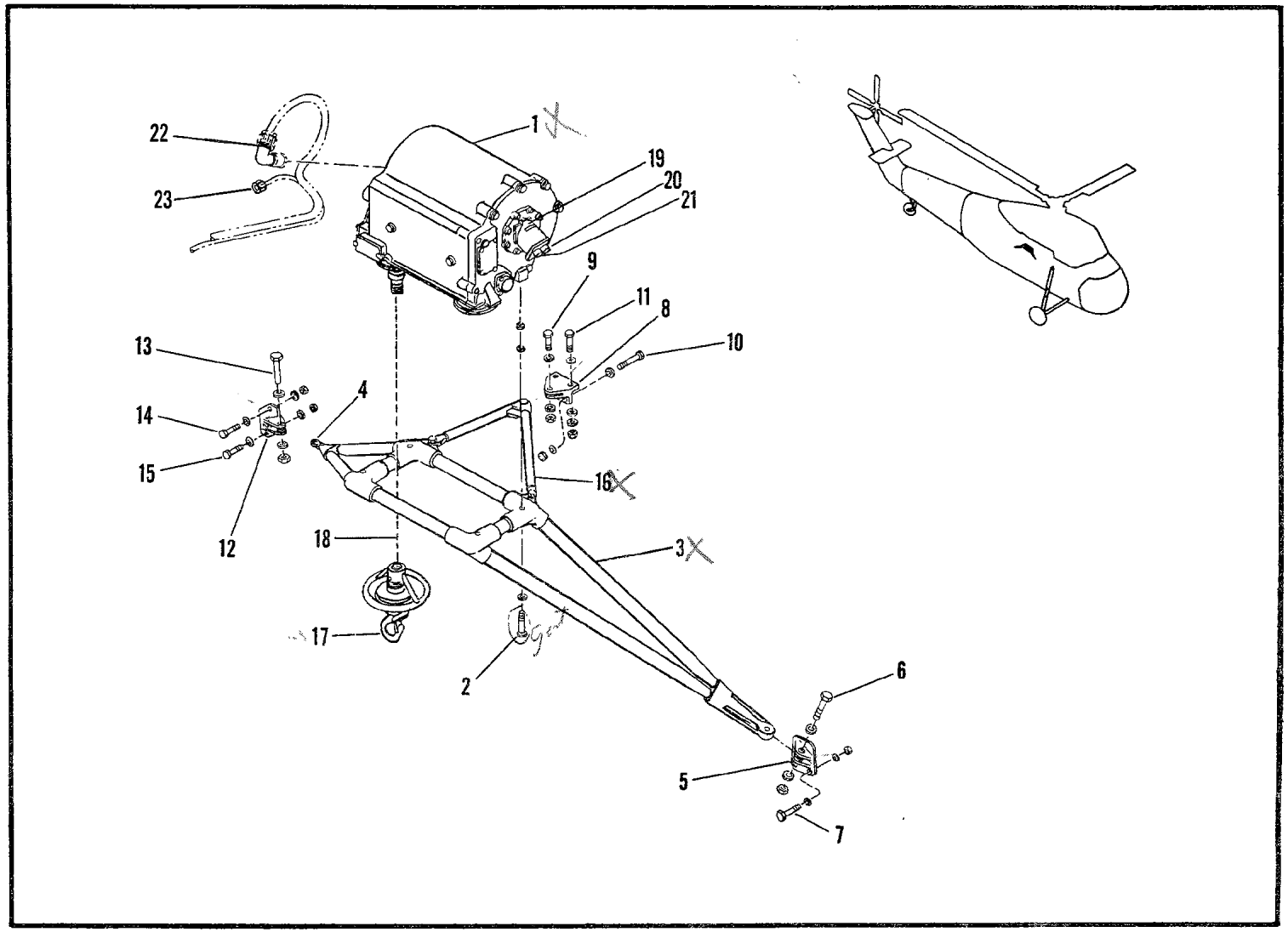

Figure 125. Rescue Hoist Installation

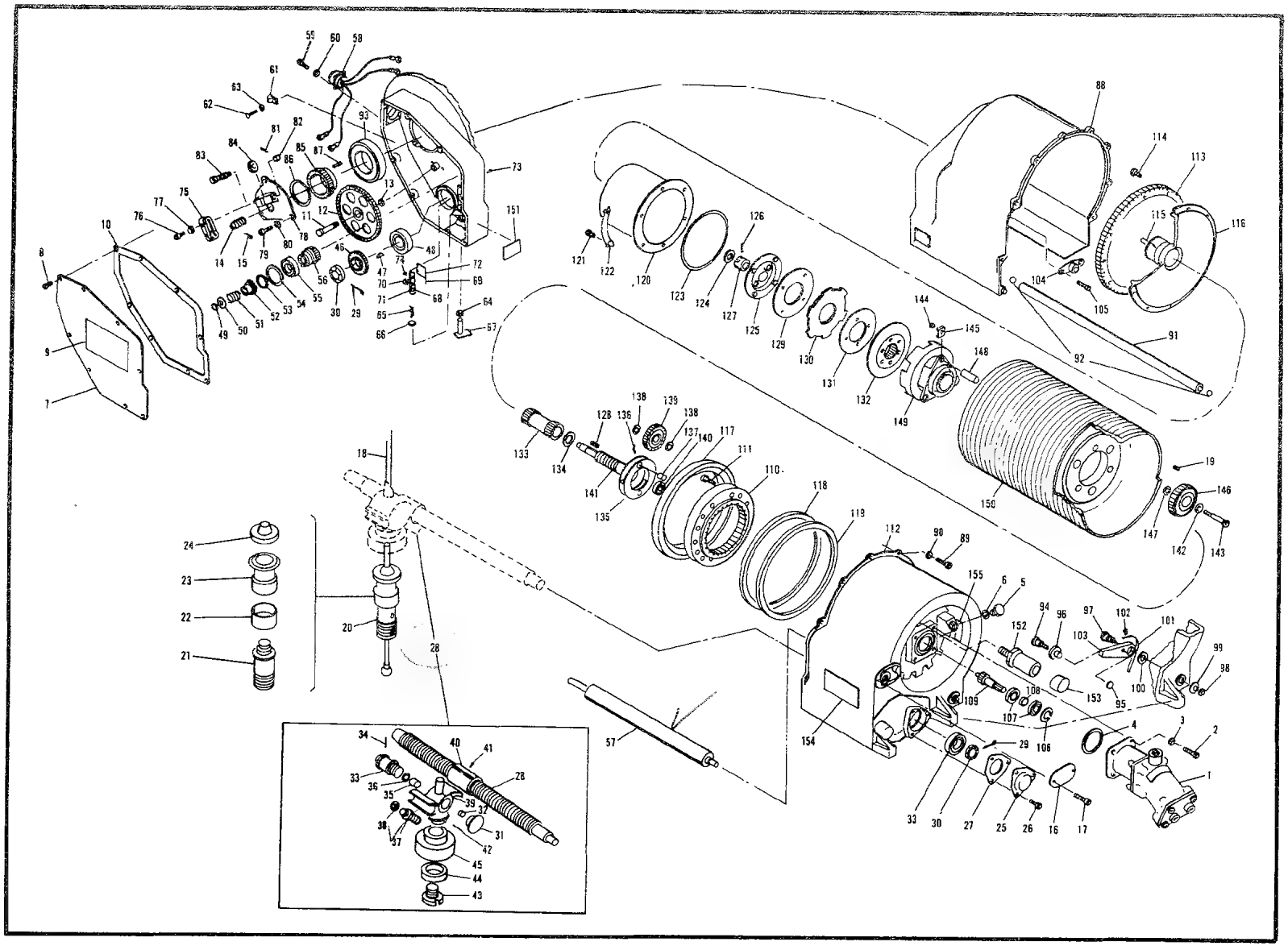

Figure 125A. Winch, Aircraft Mounted

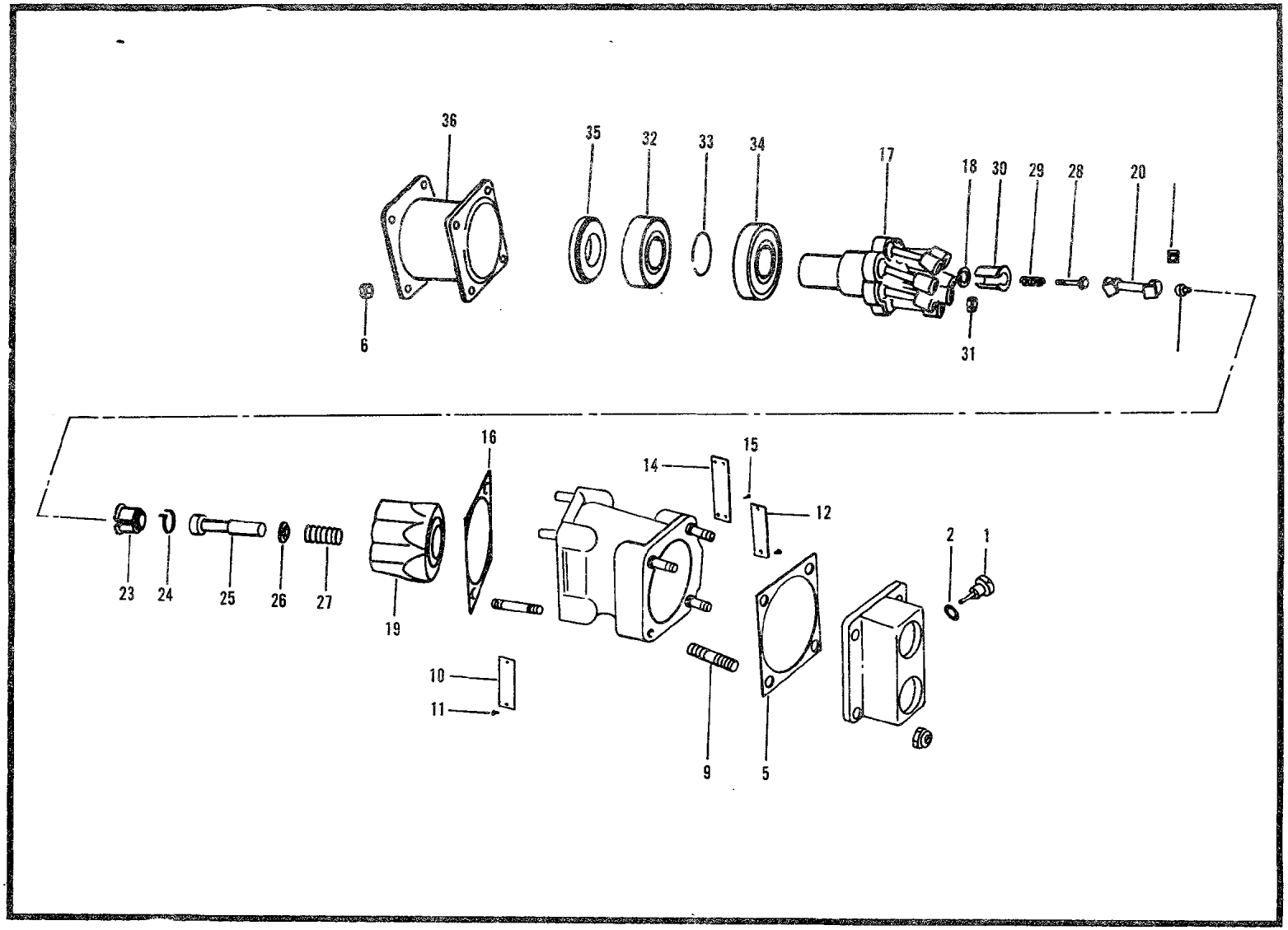

Figure 125B. Motor, Hydraulic

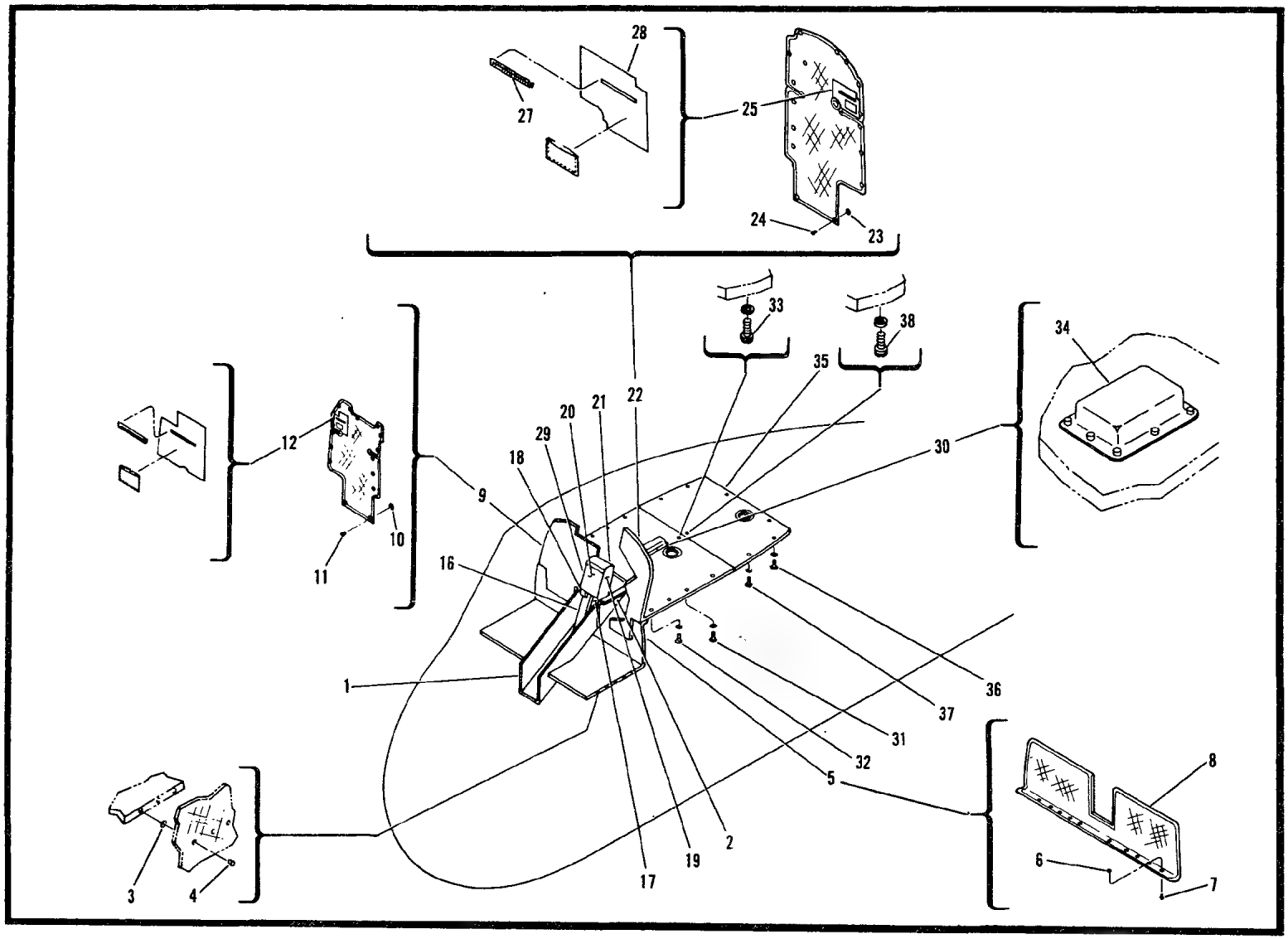

Figure 126. Sound Proofing Installation

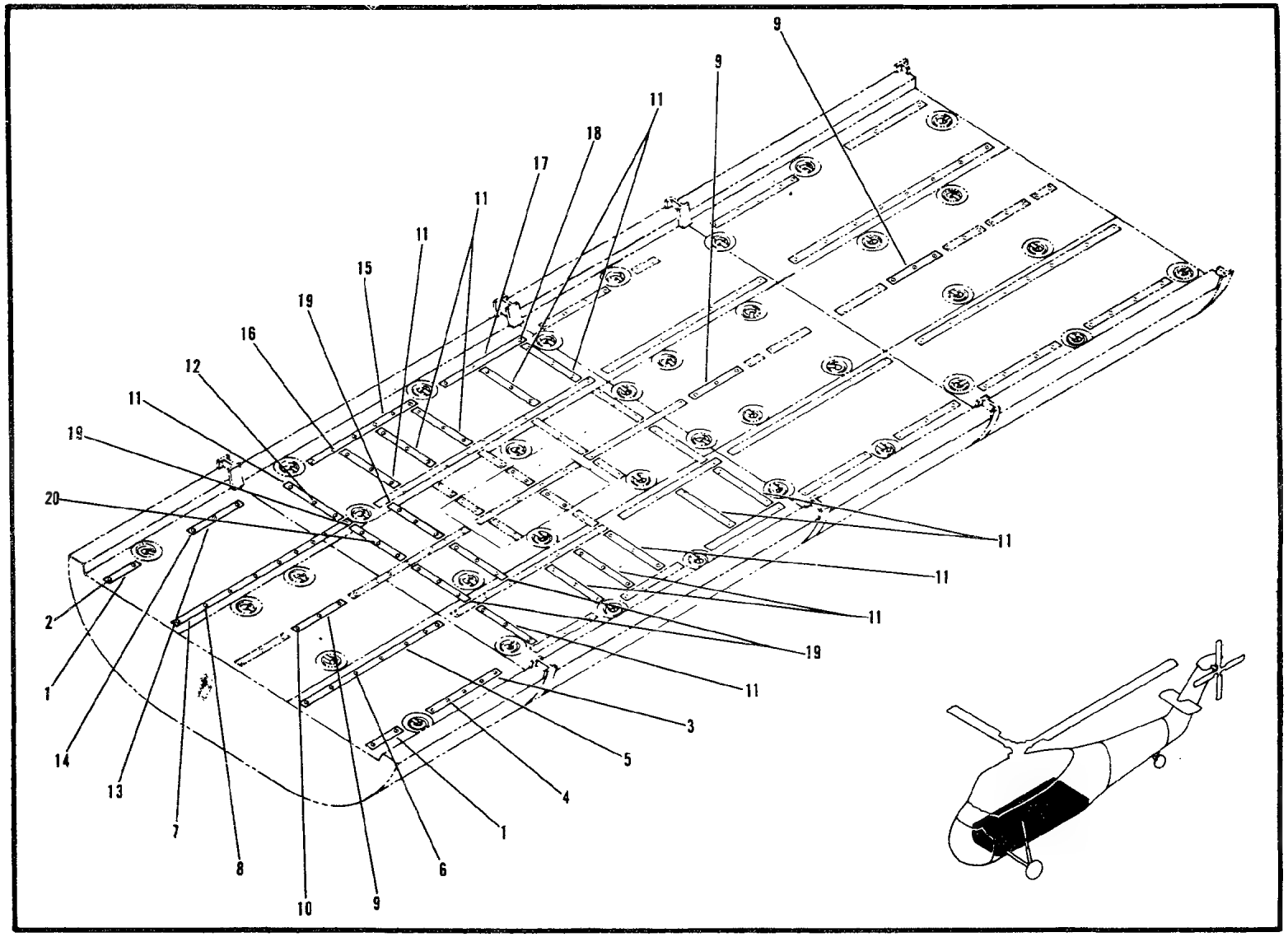

783

Figure 127. Skid Rail Installation

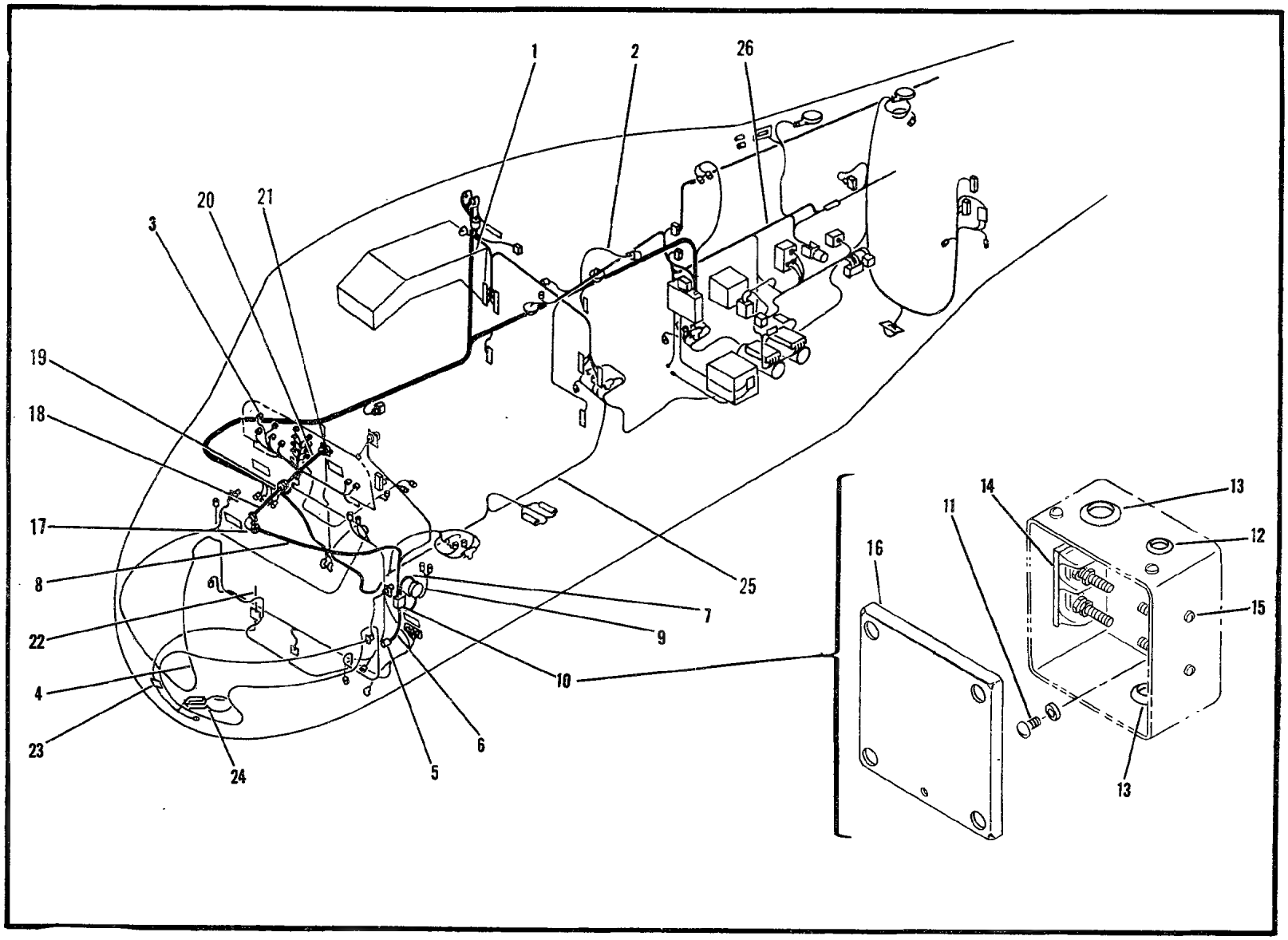

Figure 128. Forward Section Electrical Wiring Installation

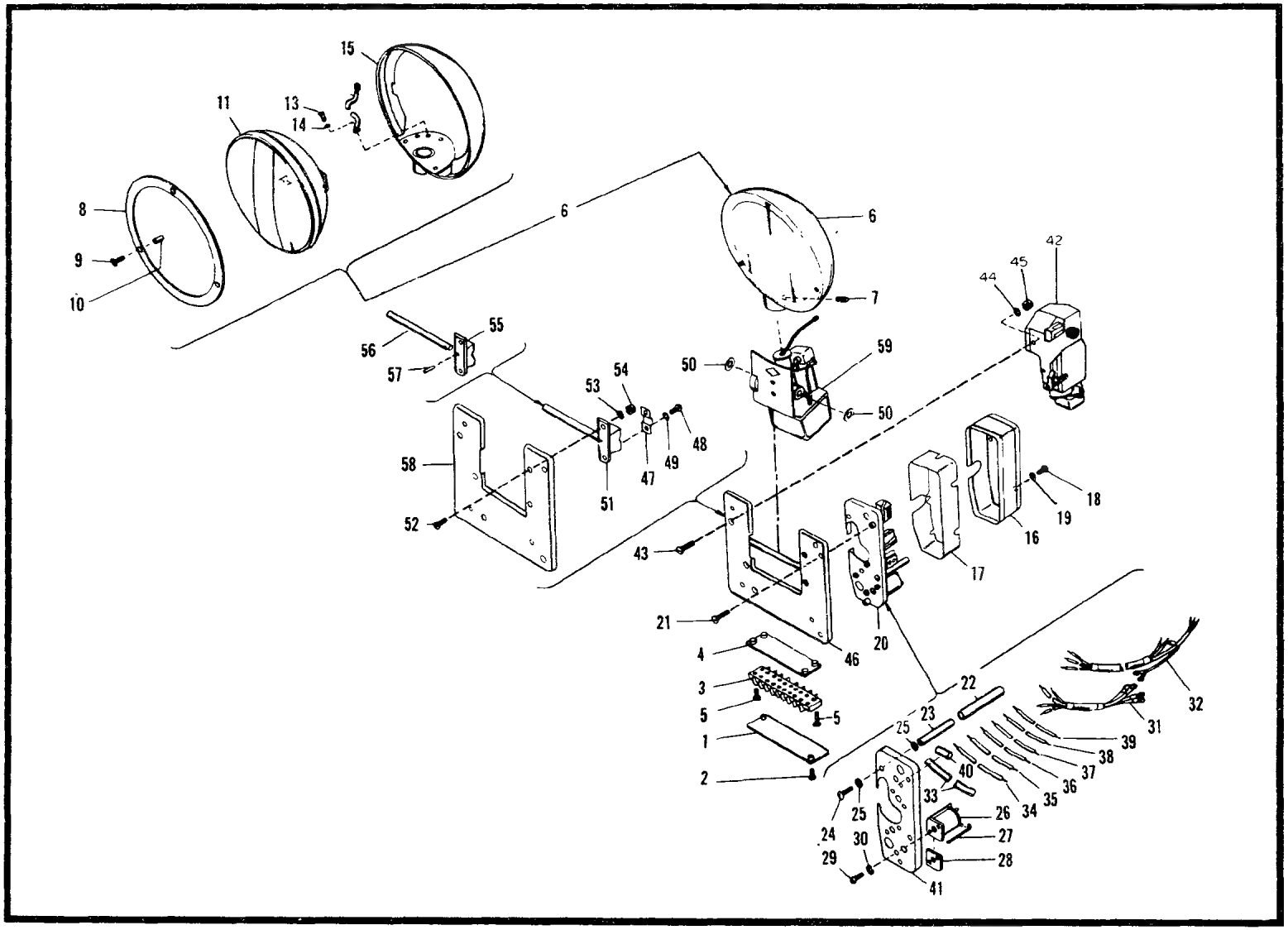

Figure 128A. Light, Landing, Aircraft (Sheet 1 of 4)

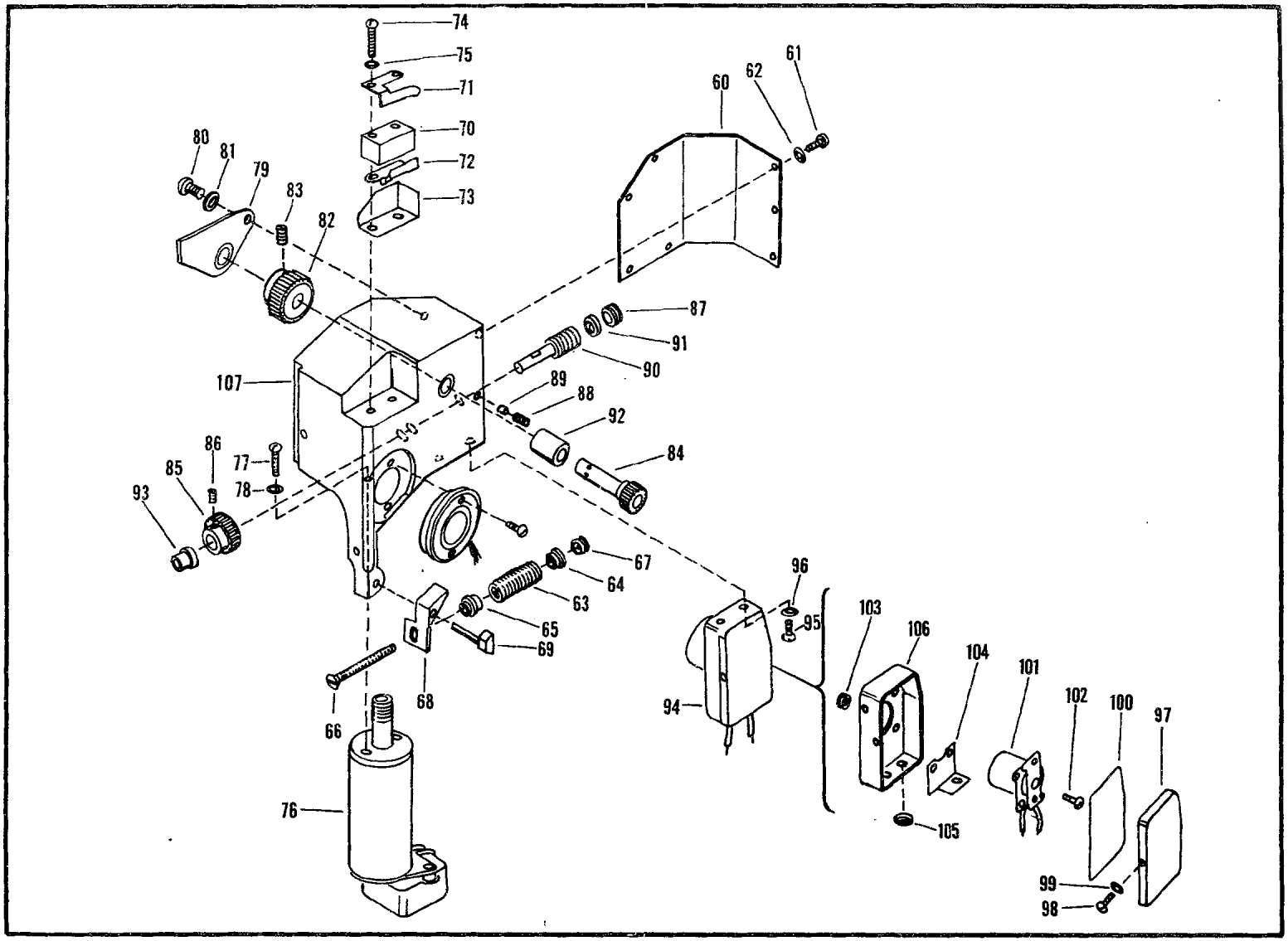

Figure 128A. Light, Landing, Aircraft (Gear Box Assembly) (Sheet 2 of 4)

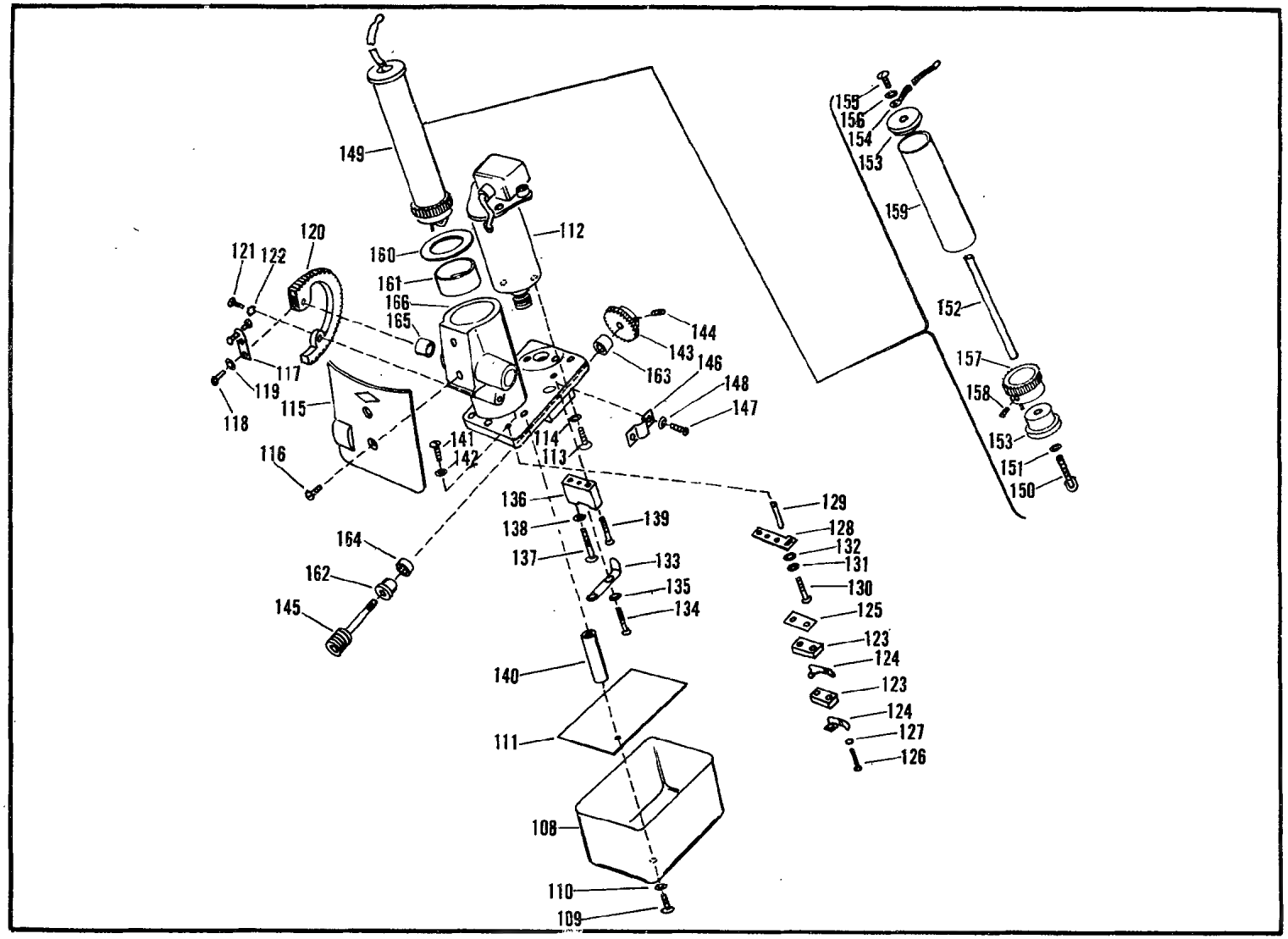

Figure 128A. Light, Landing, Aircraft (Rotating Mechanism) (Sheet 3 of 4)

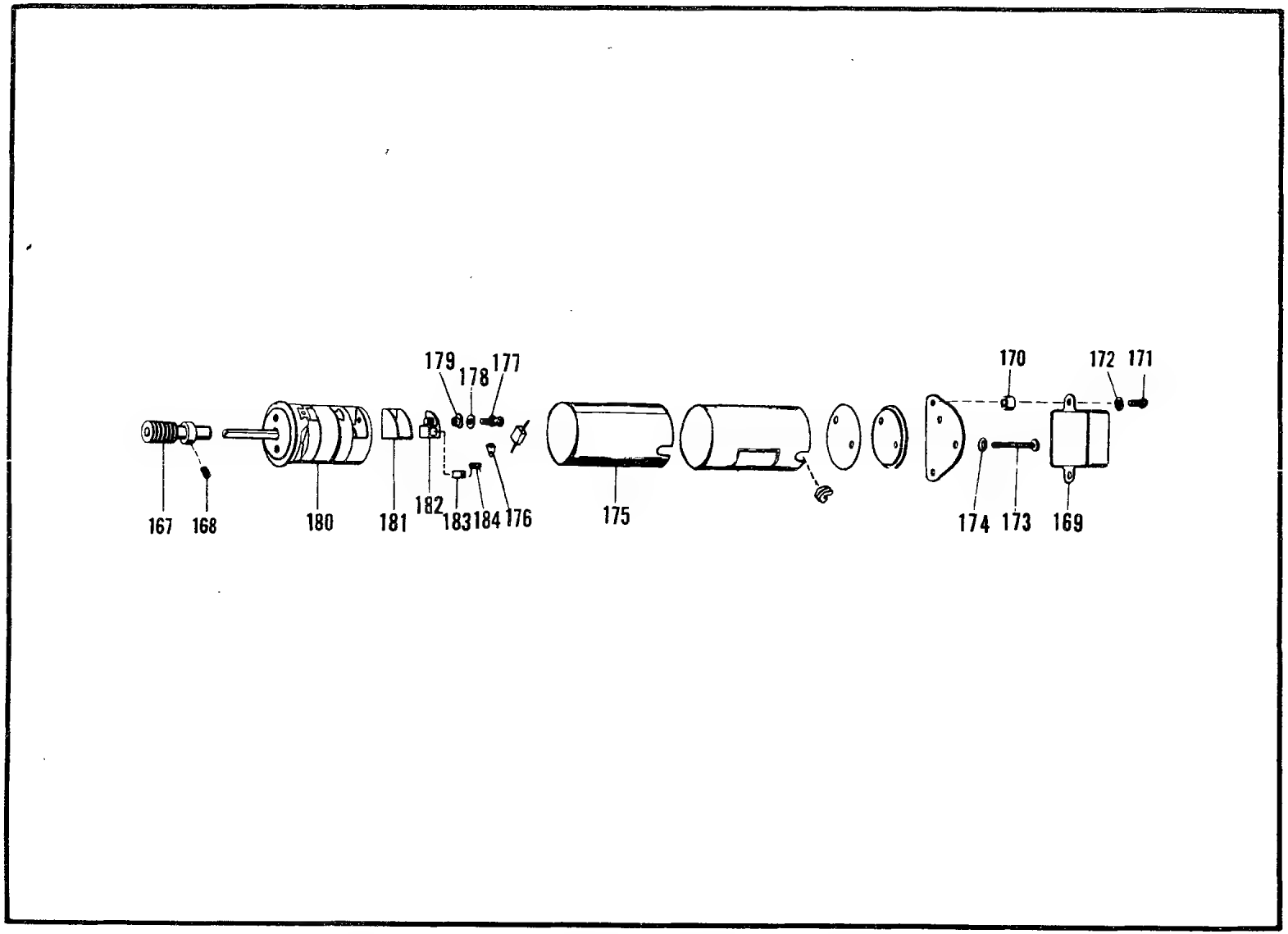

Figure 128A. Light, Landing, Aircraft (Motor Assembly) (Sheet 4 of 4)

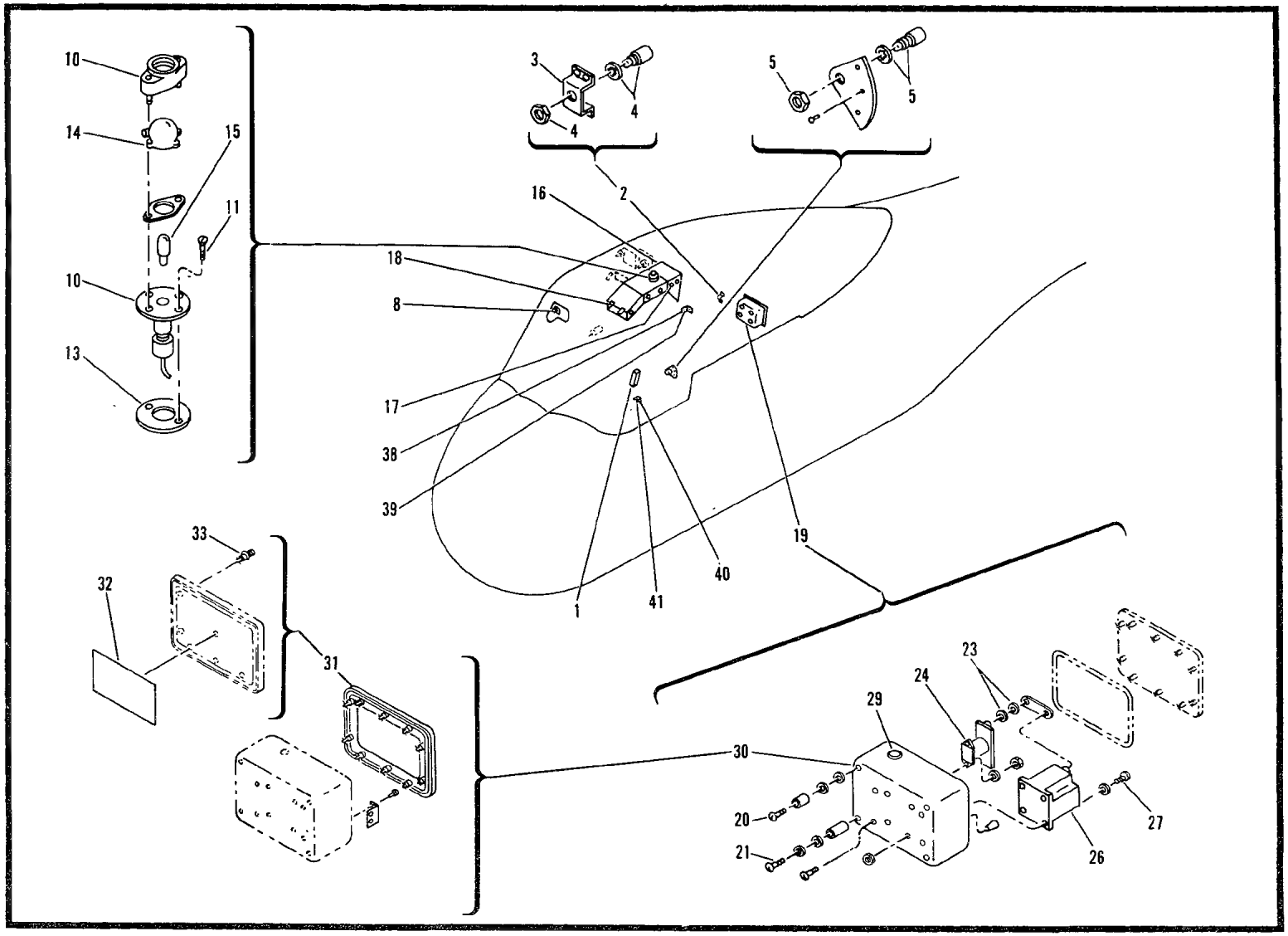

Figure 129. Canopy Equipment and Wiring Installation

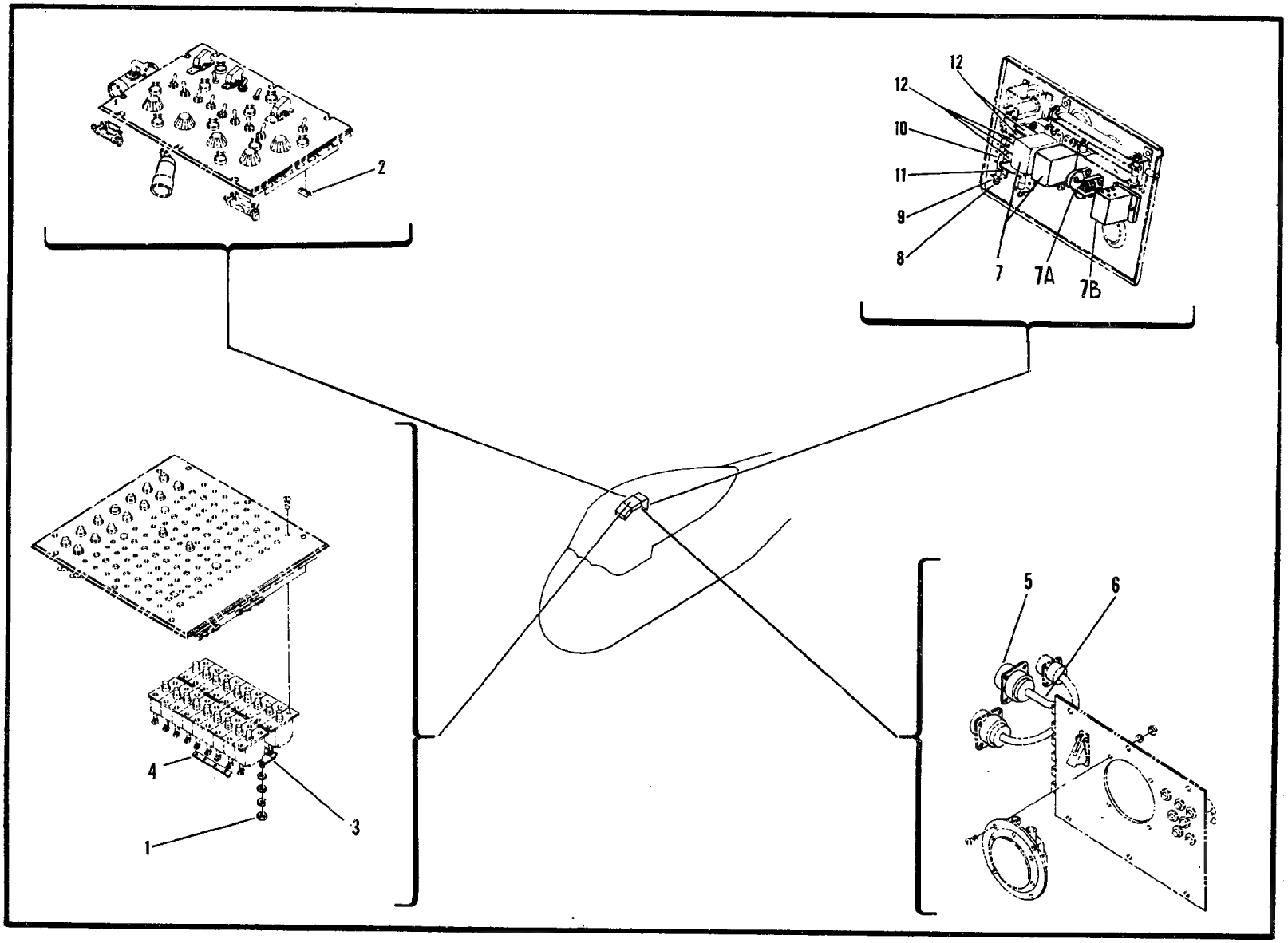

Figure 130. Wiring Assembly-Overhead Control Panel (Sheet 1 of 2)

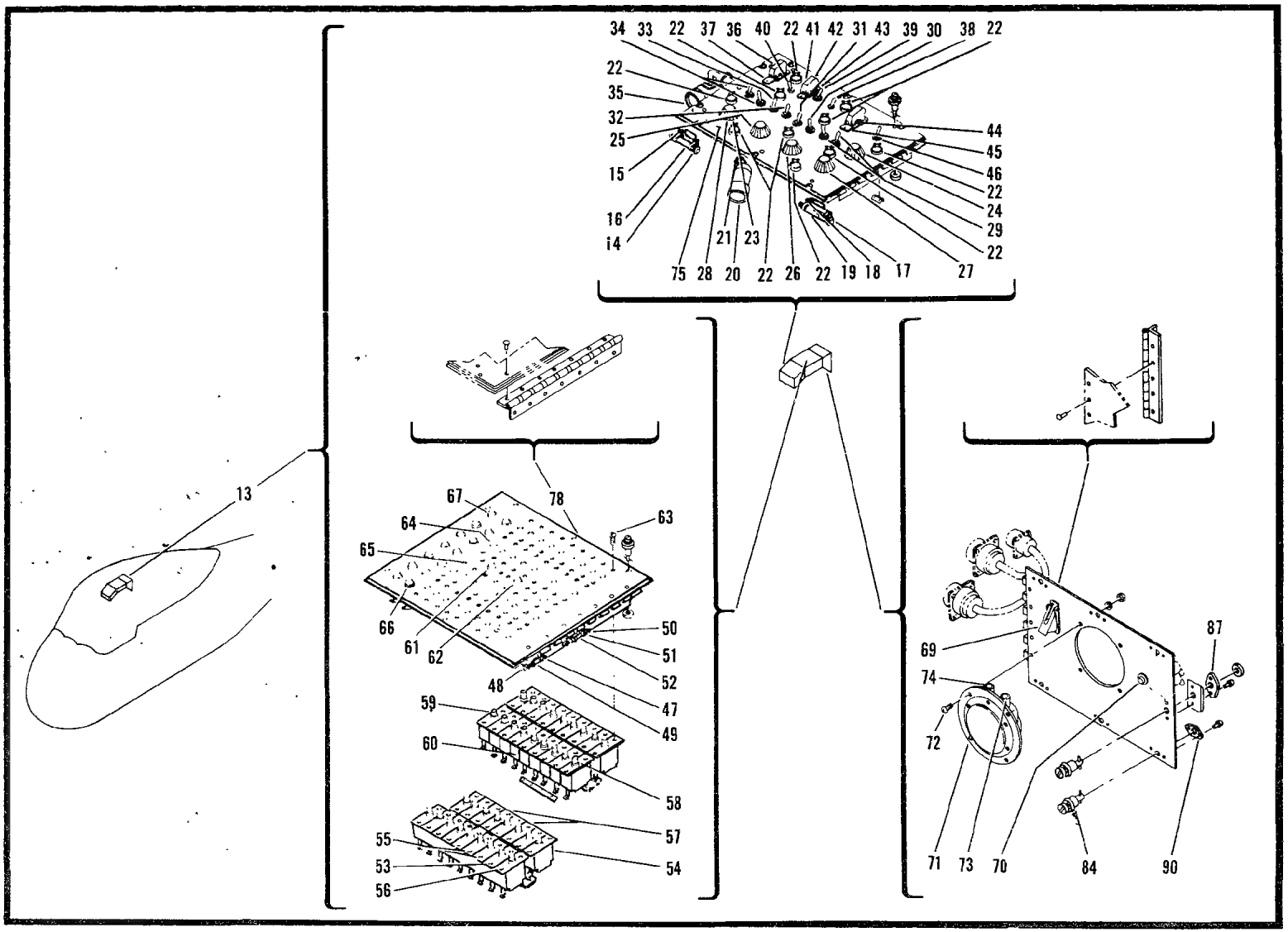

Figure 130. Wiring Assembly-Overhead Control Panel (Sheet 2 of 2)

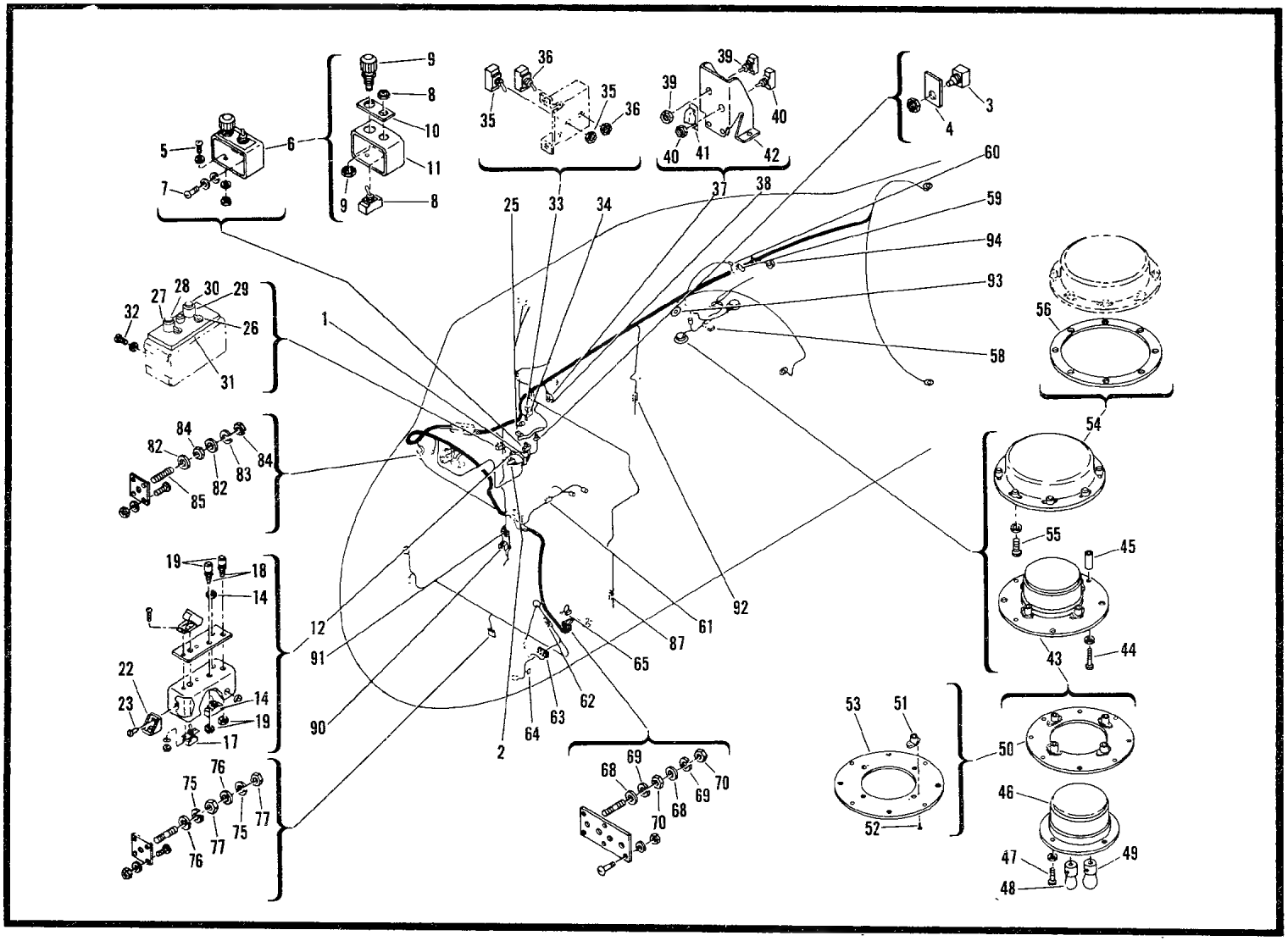

Figure 131. Cabin Equipment and Wiring Installation
(USBL EFF 53-4475 thru 56-4312)

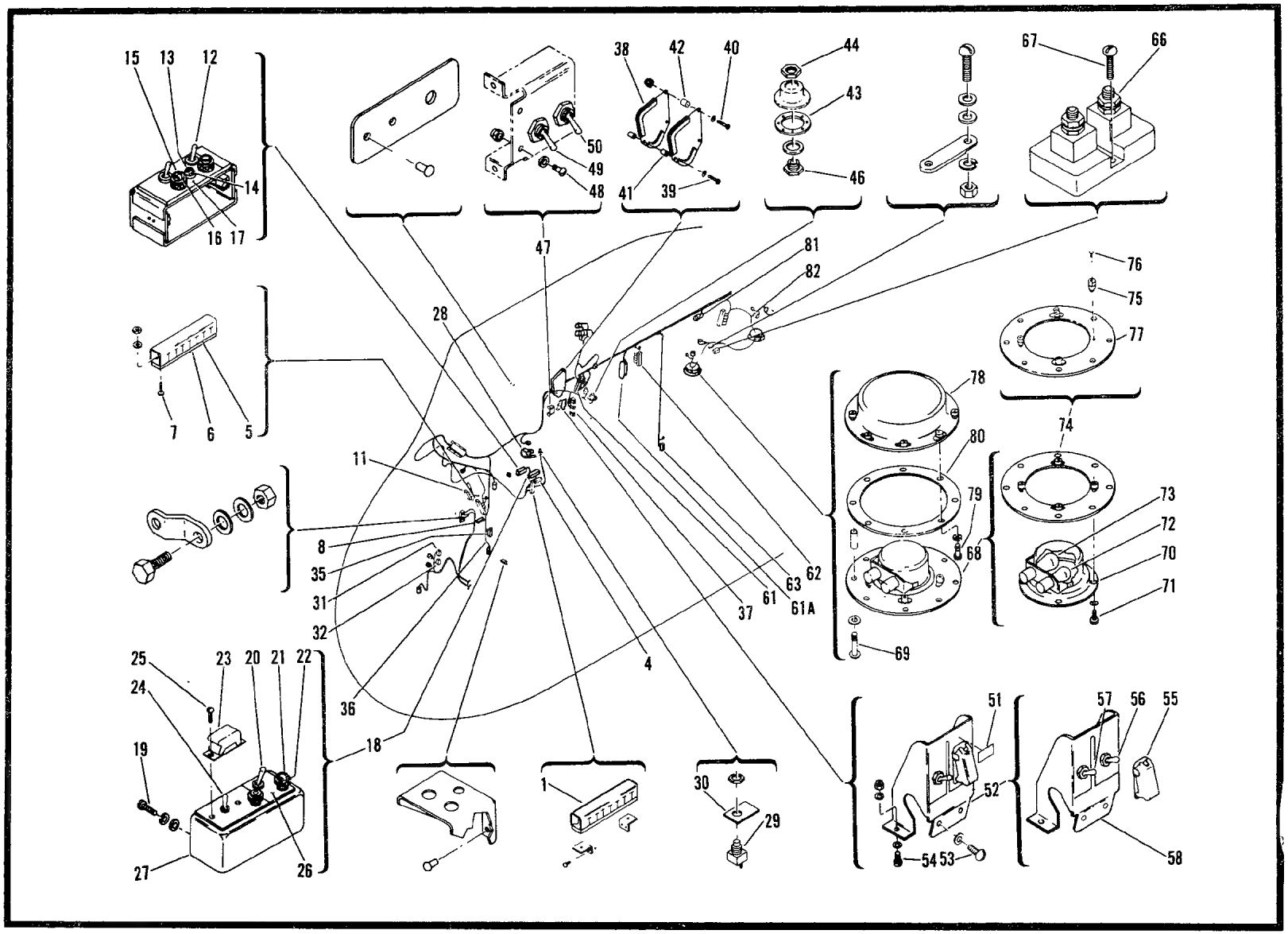

Figure 132. Cabin Equipment and Wiring Installation (USBL EFF 56-4313 and Subsequent)(Sheet 1 of 2)

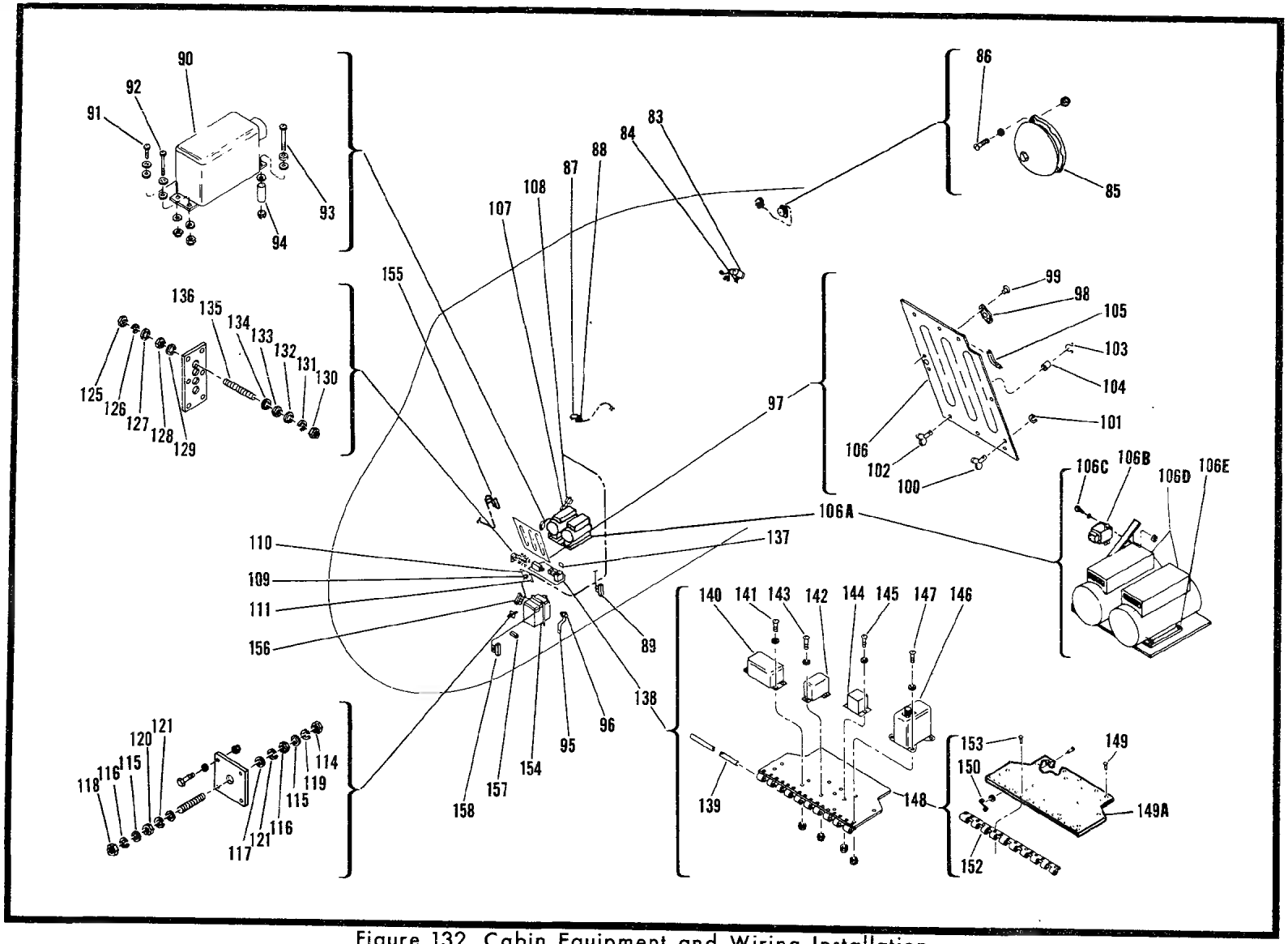

Figure 132. Cabin Equipment and Wiring Installation
(USBL EFF 56-4313 and Subsequent)(Sheet 2 of 2)

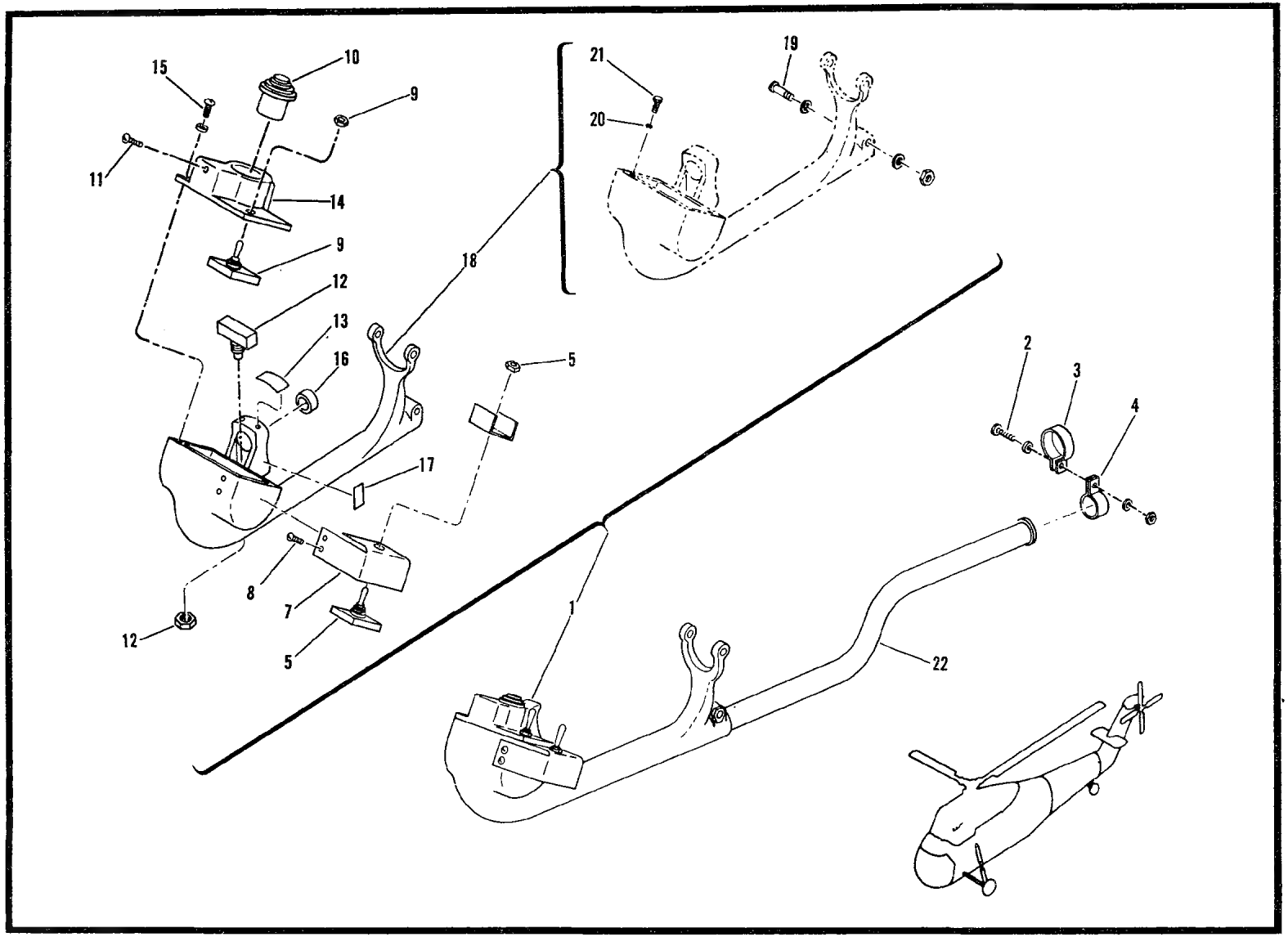

Figure 133. Landing Light Control Box Installation

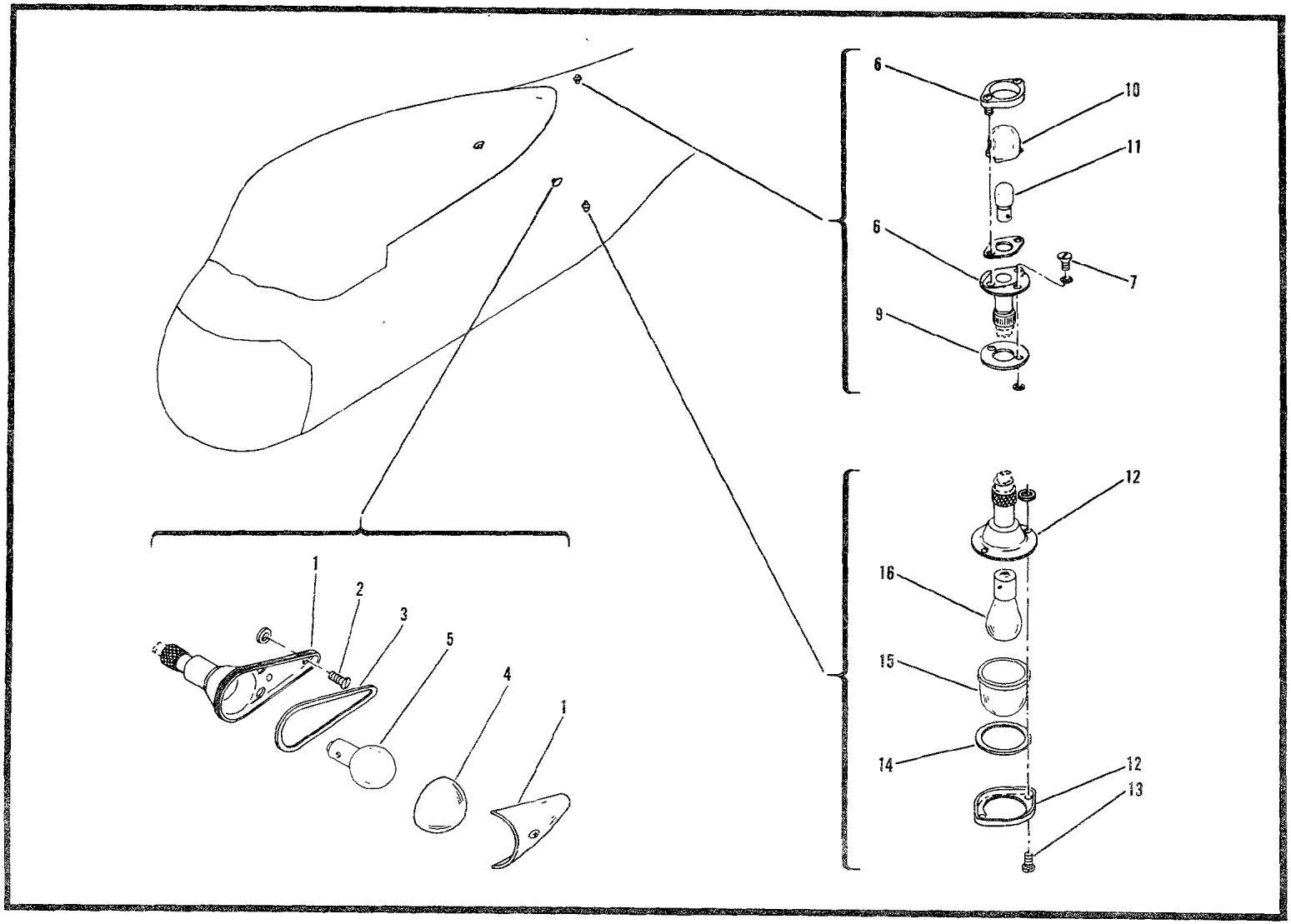

Figure 134. Fuselage and Position Lights Installation

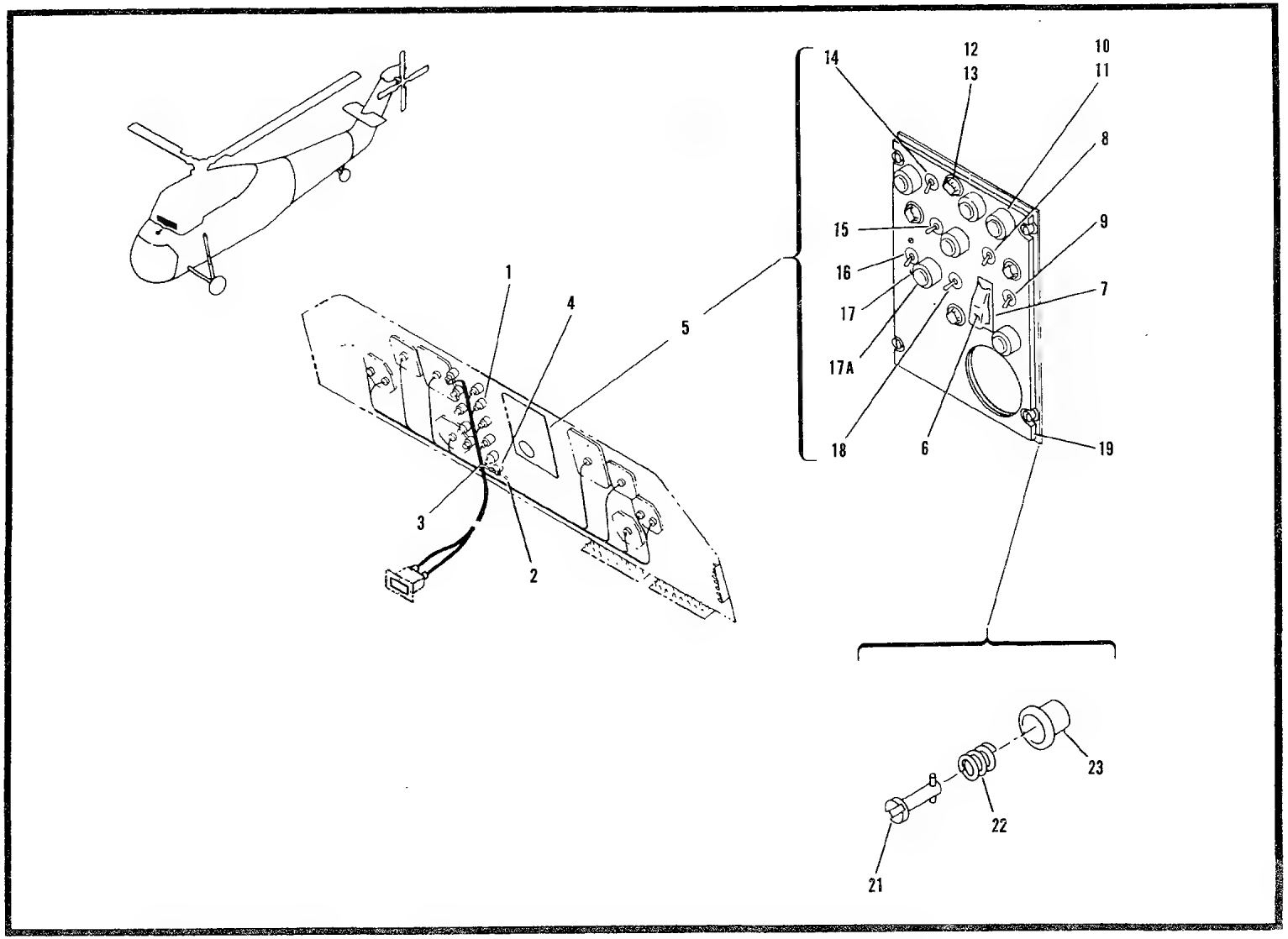

Figure 135. Instrument Panel Wiring Assembly

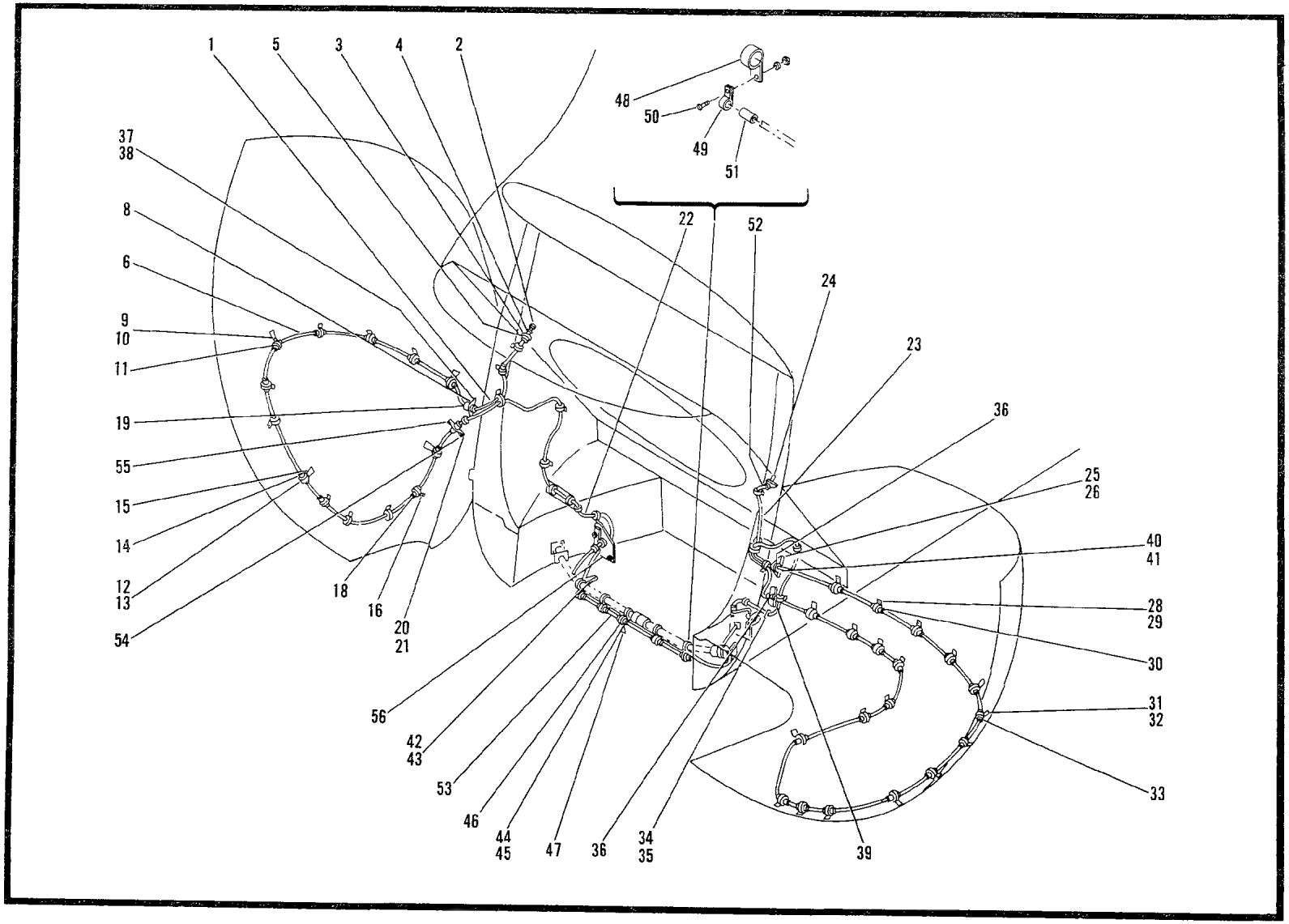

Figure 136. Fire Detection Wiring Installation

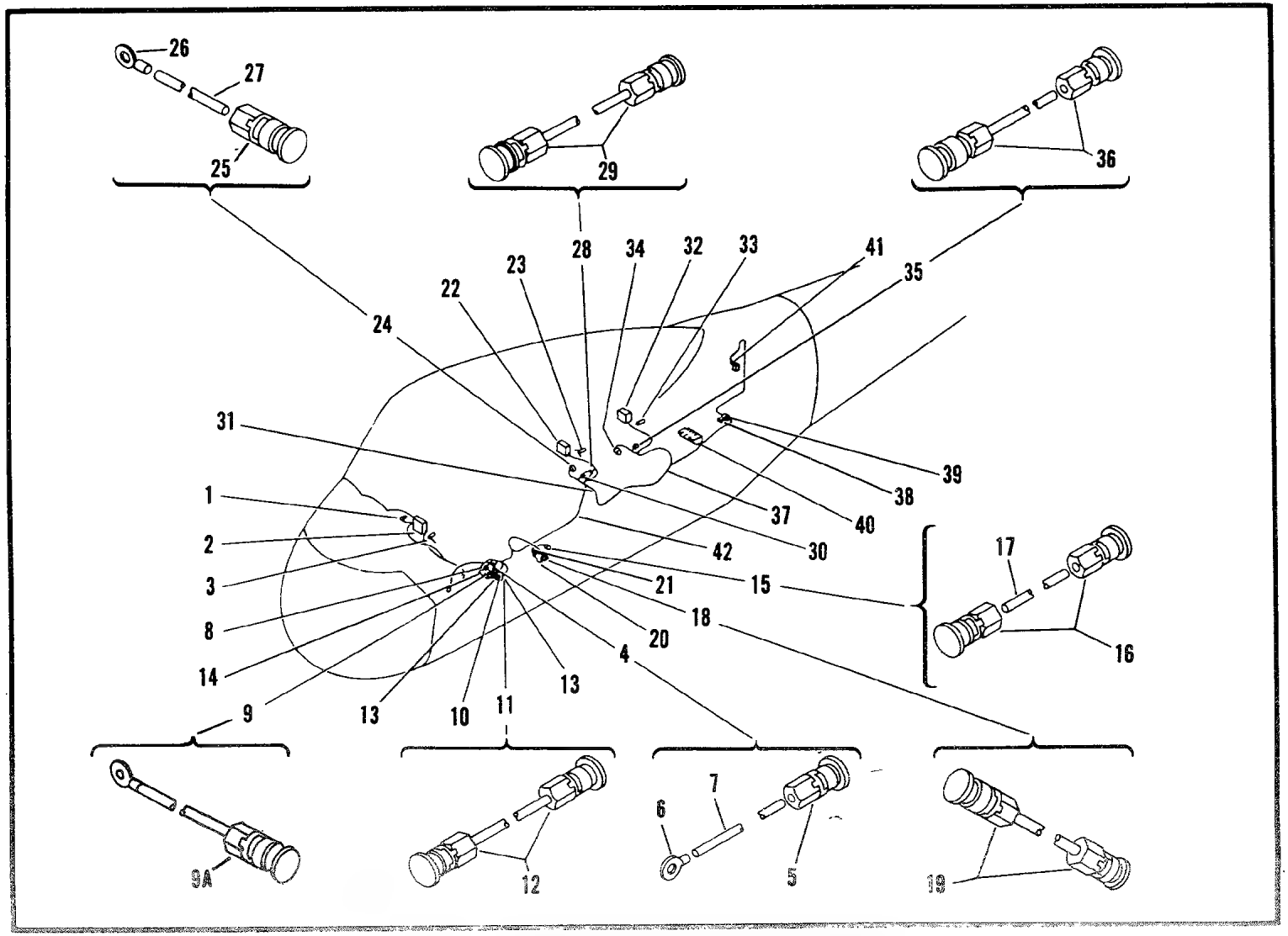

Figure 707. Fuel Gauging System Wiring Harness

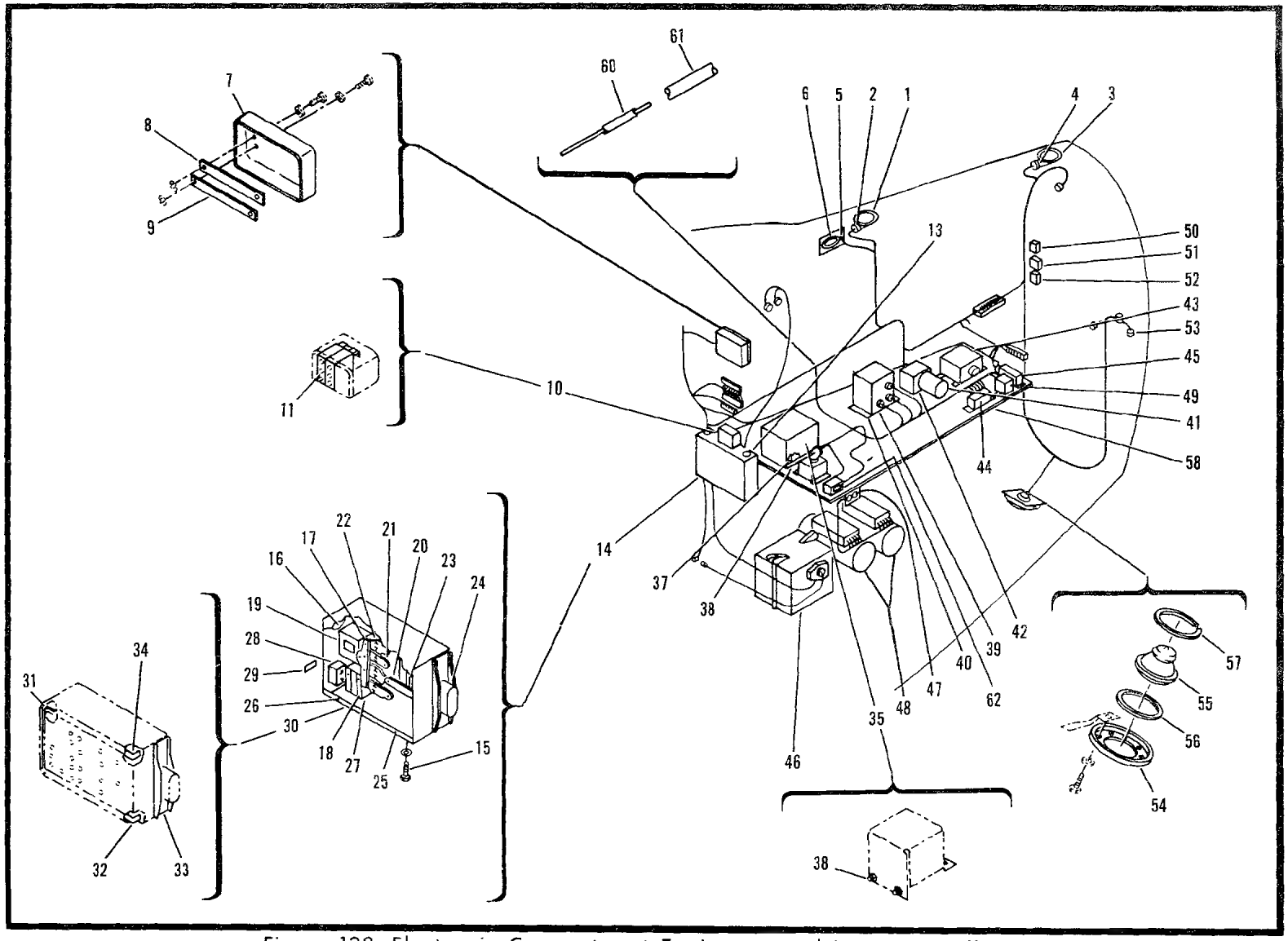

Figure 138. Electronic Compartment Equipment and Wiring Installation
(USBL EFF 53-4475 thru 56-4312)

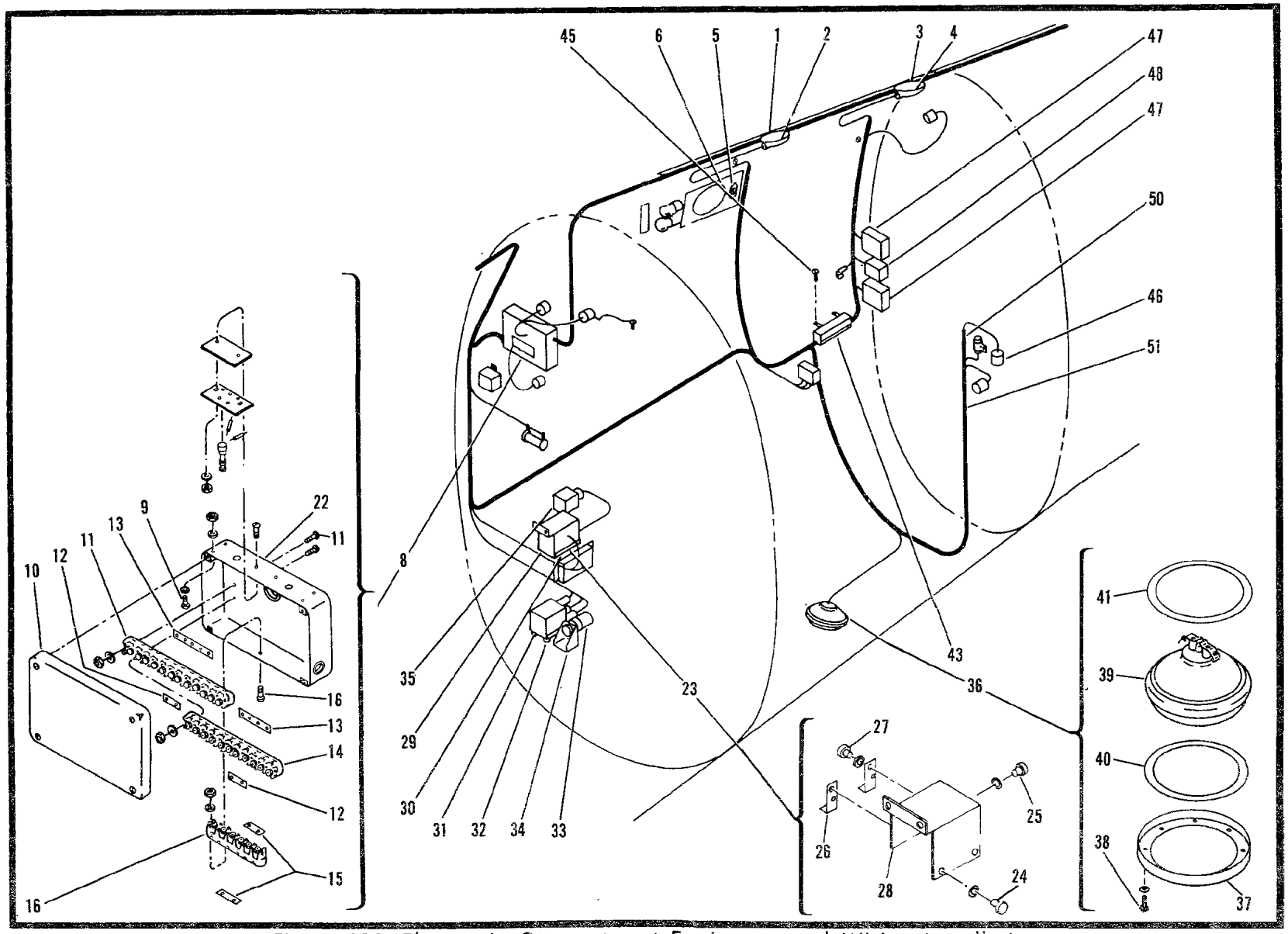

Figure 139. Electronic Compartment Equipment and Wiring Installation (USBL EFF 56-4313 and Subsequent)

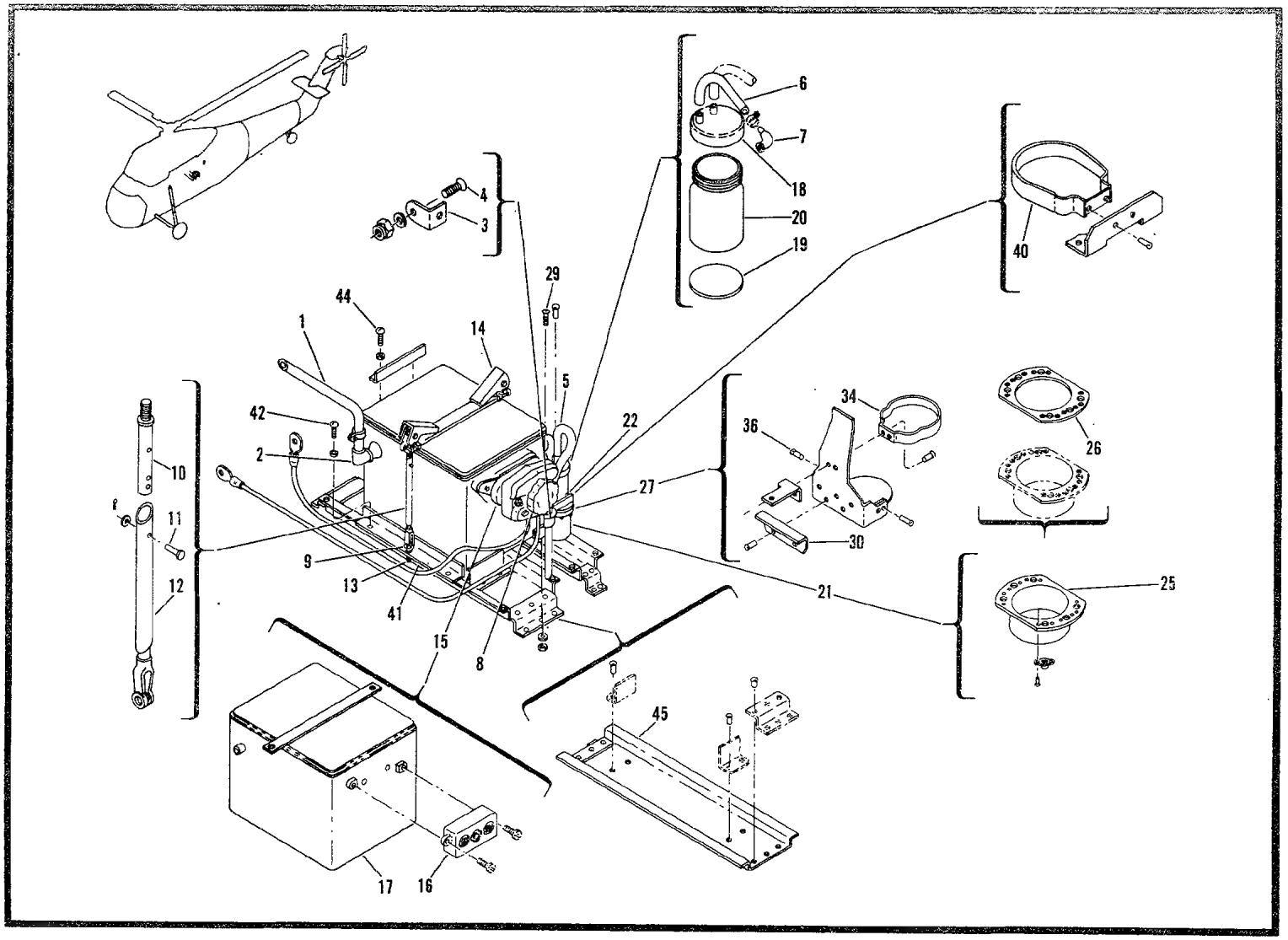

Figure 140. Battery Installation (USBL EFF 53-4475 thru 56-4312)

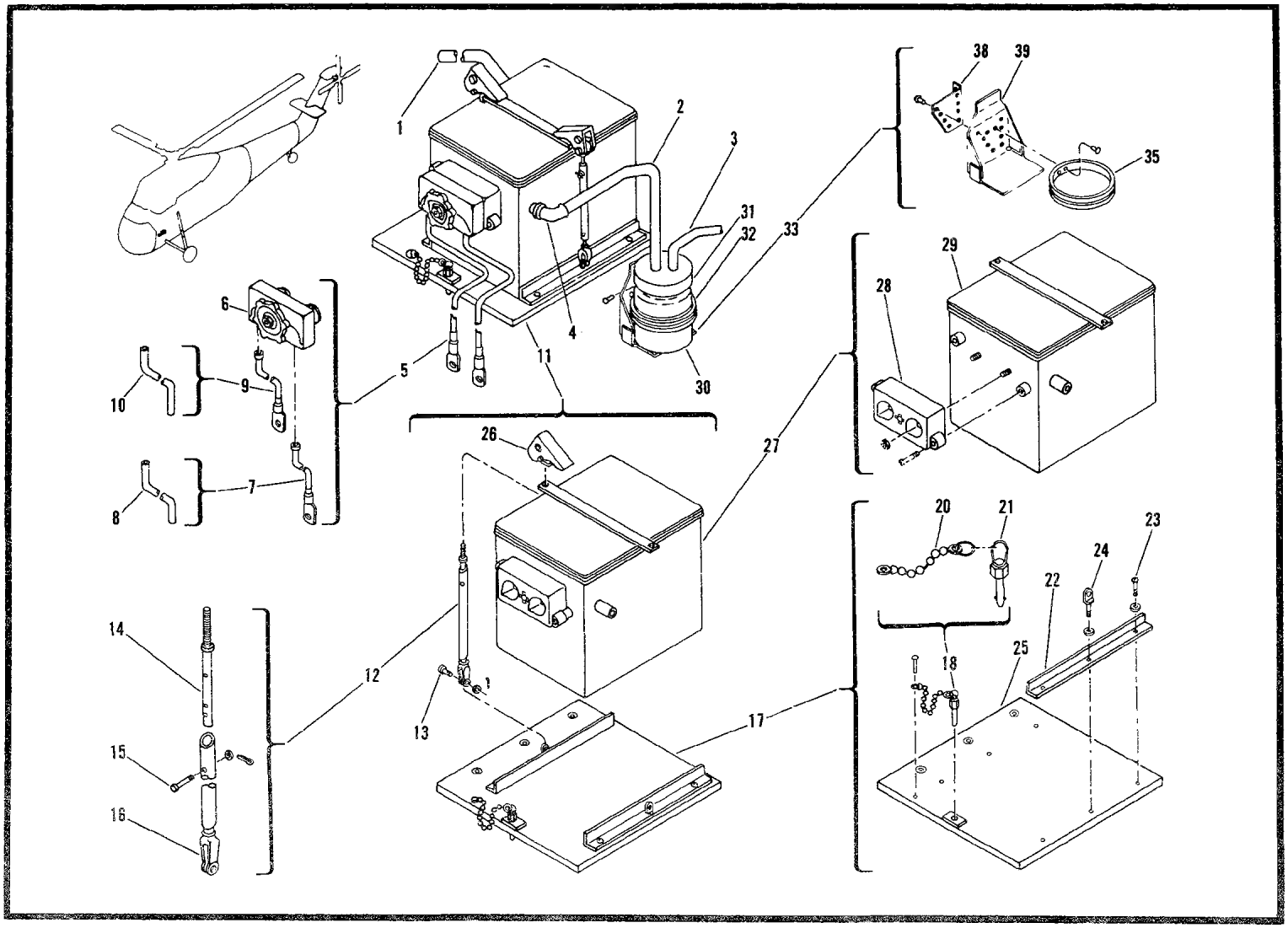

Figure 141. Battery Installation (USBL EFF 56-4313 and Subsequent)

Figures 142 and 143 Not Used In TM55-1520-202-35P

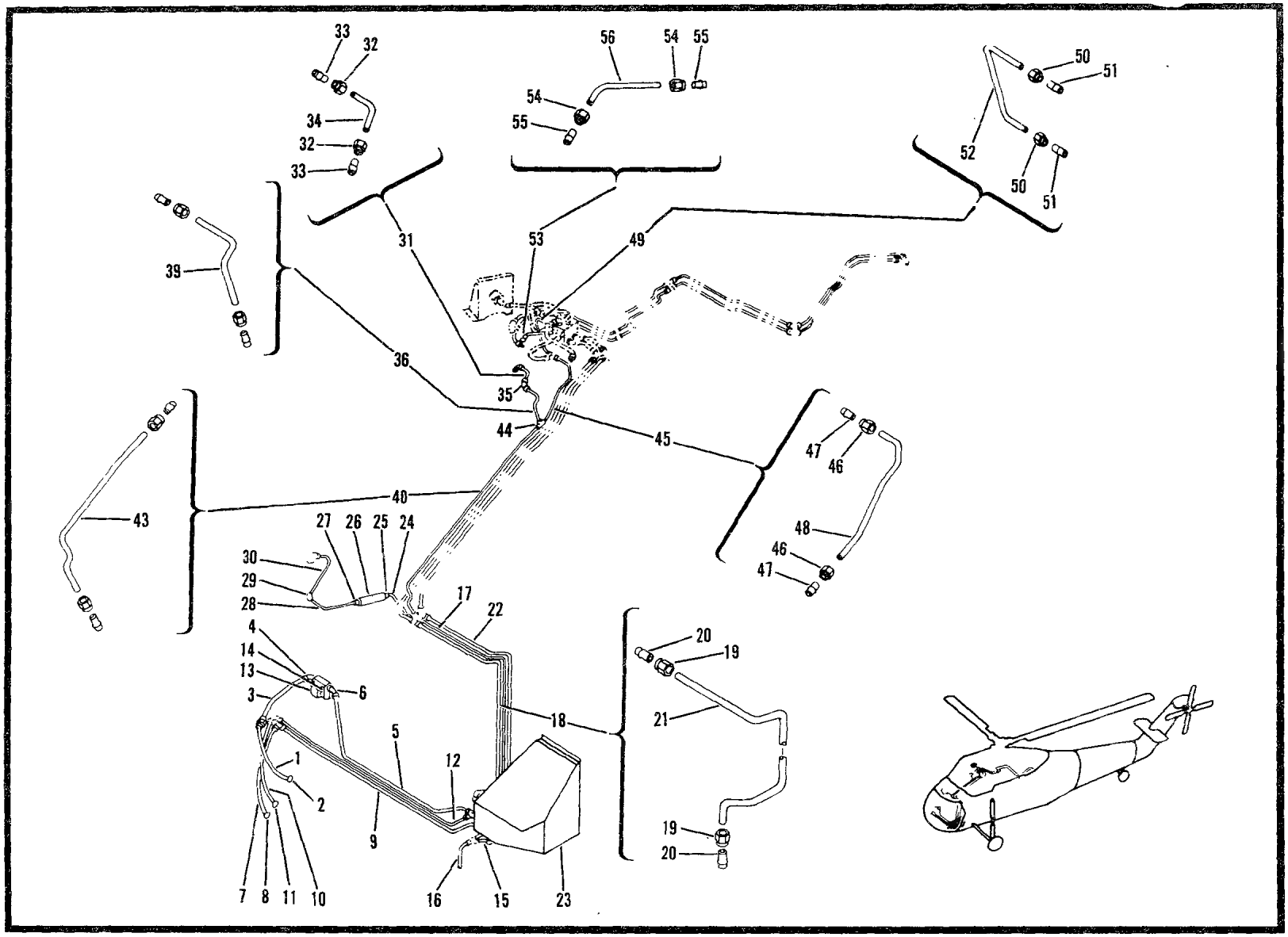

Figure 144 Automatic Stabilization Servo Hydraulic System Installation (USBL EFF 53-4475 thru 56-4312)(Sheet 1 of 3)

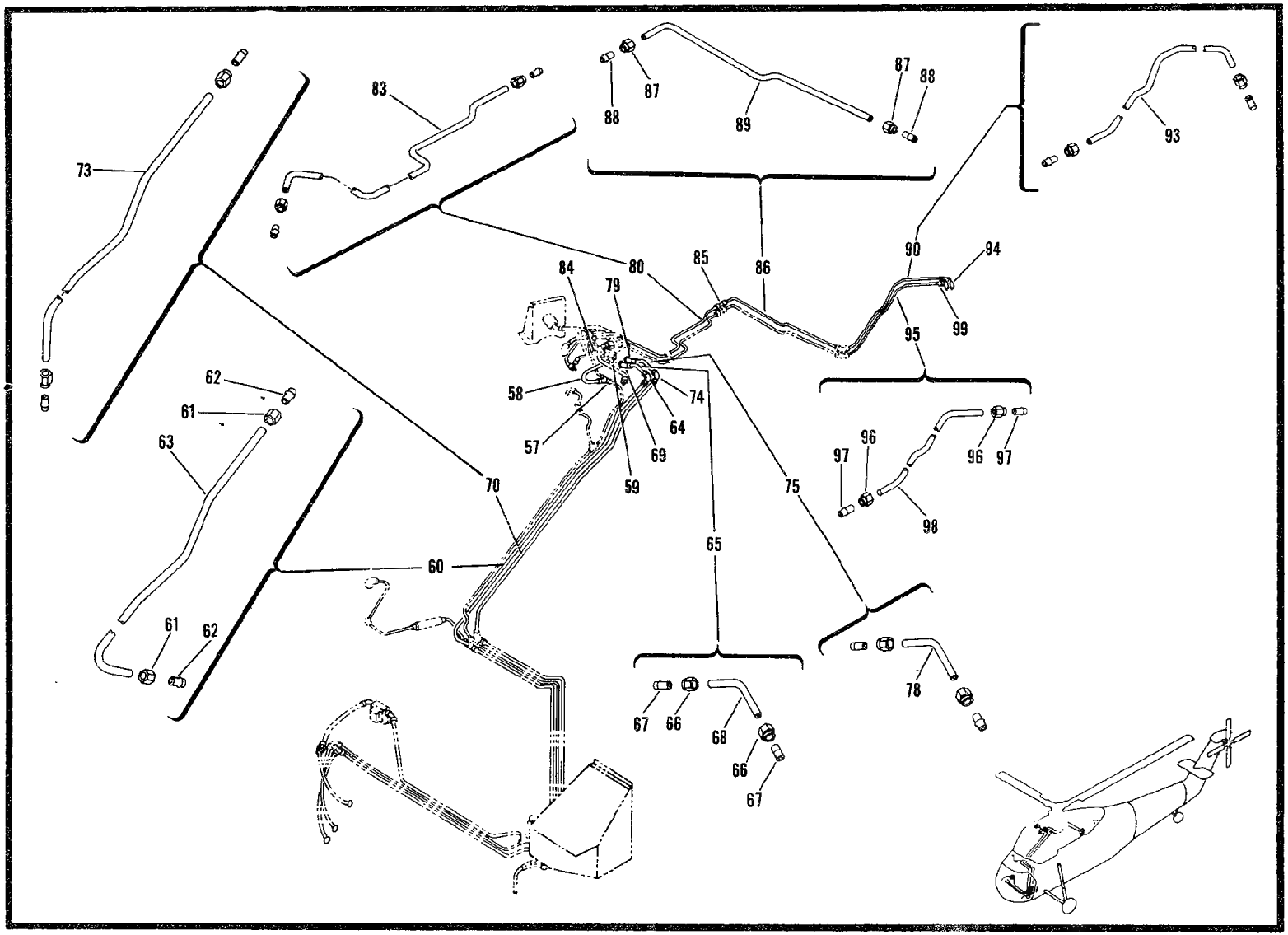

Figure 144. Automatic Stabilization Servo Hye Hydraulic System Installation (USBL EFF 53-4475 thru 56-4312)(Sheet 2 of 3)

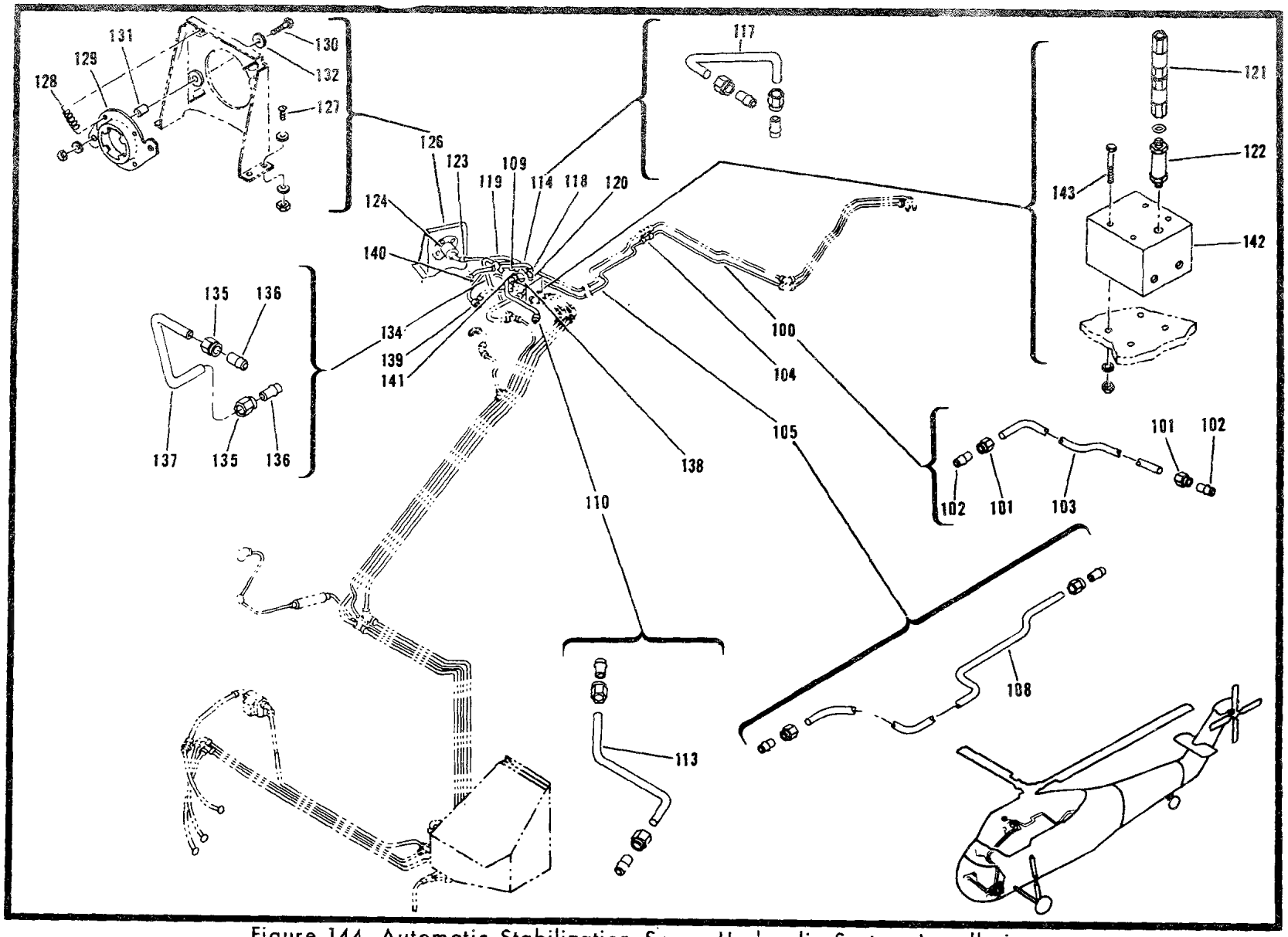

Figure 144. Automatic Stabilization Servo Hydraulic System Installation (USBL EFF 53-4475 thru 56-4312) (Sheet 3 of 3)

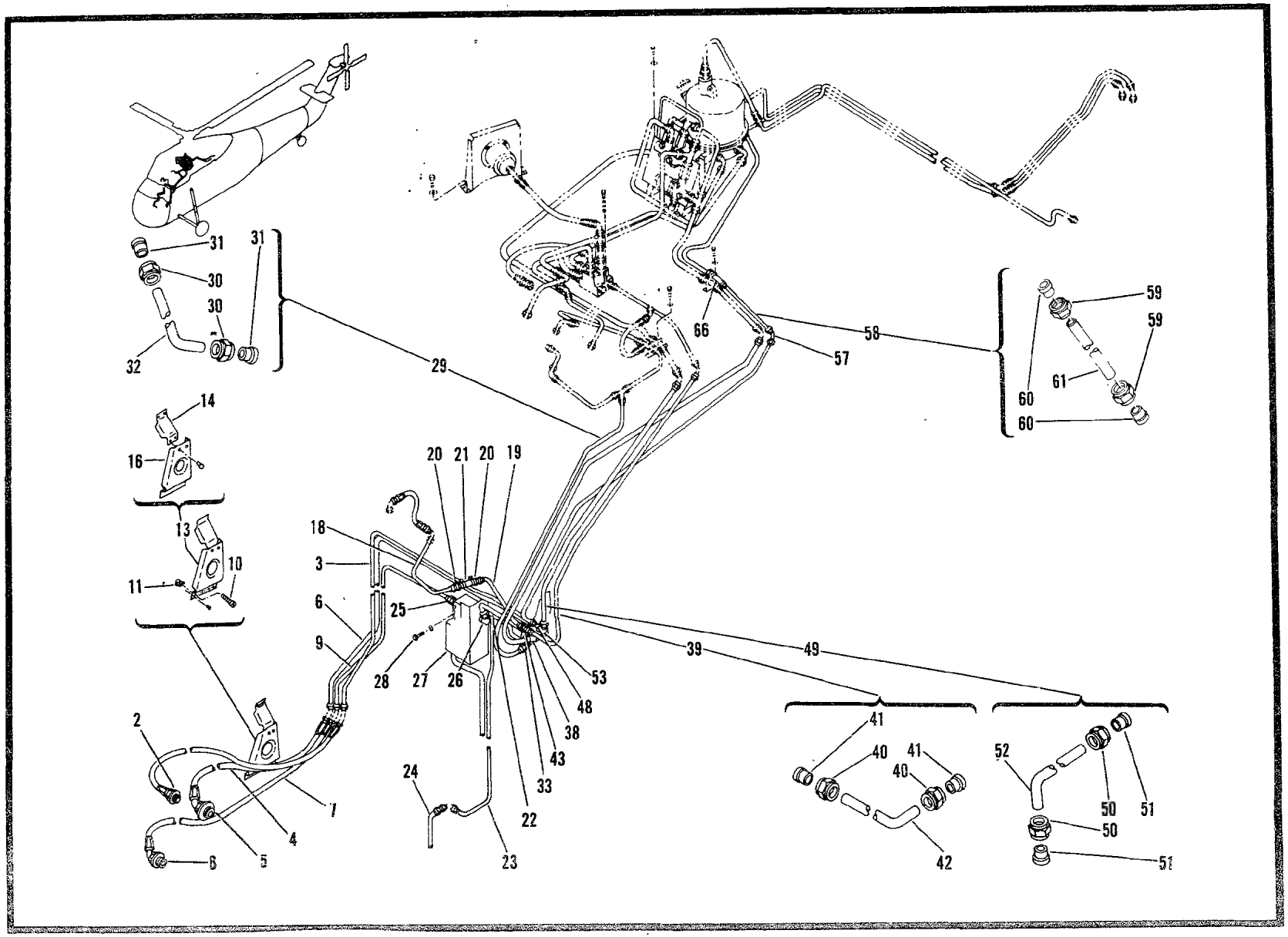

Figure 145. Automatic Stablization Servo Hydraulic System Installation (USBL EFF 56-4313 and Subsequent)(Sheet 1 of 3)

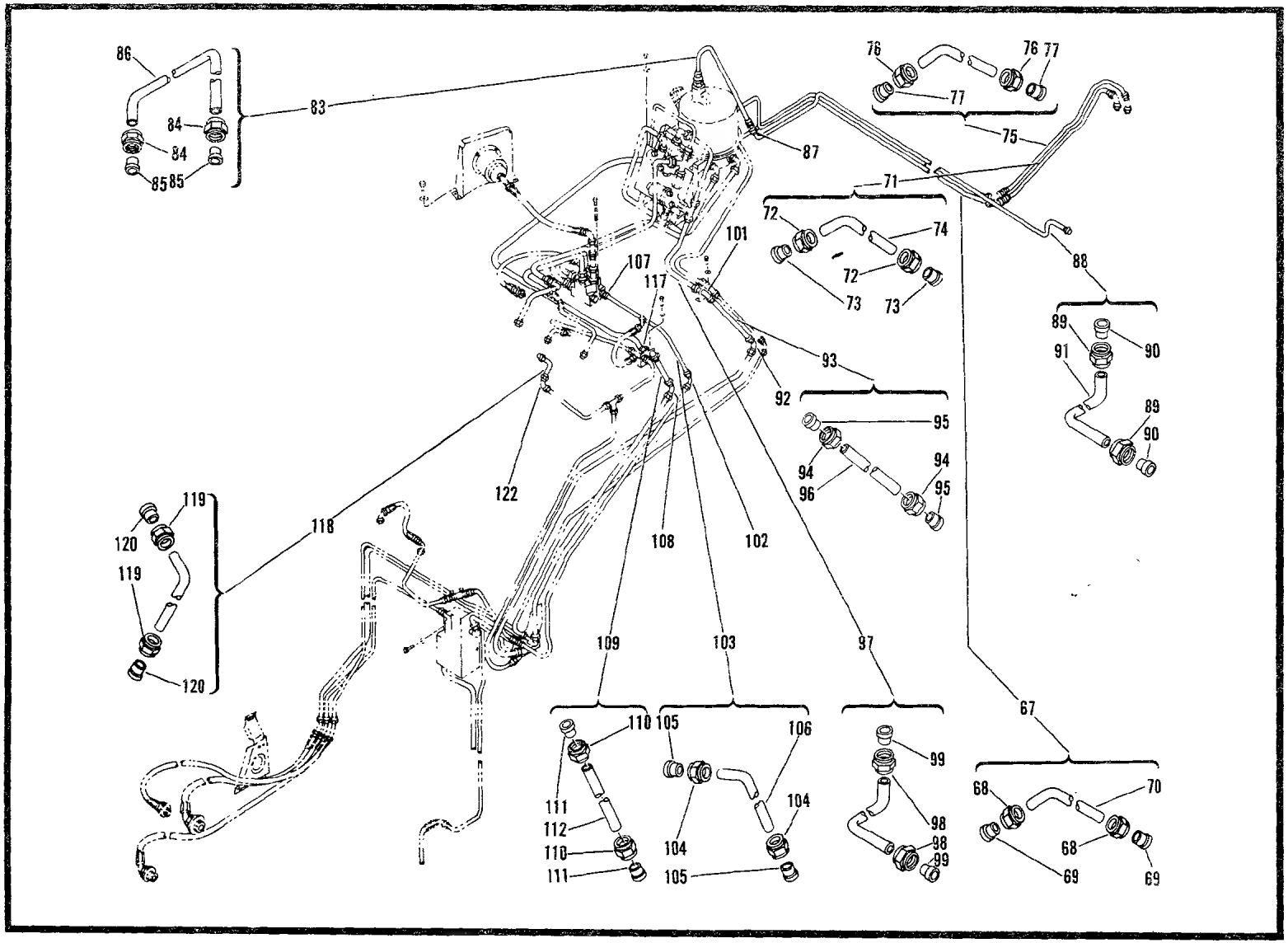

Figure 145. Automatic Stabilization Servo Hydraulic System Installation (USBL EFF 56-4313 and Subsequent) (Sheet 2 of 3)

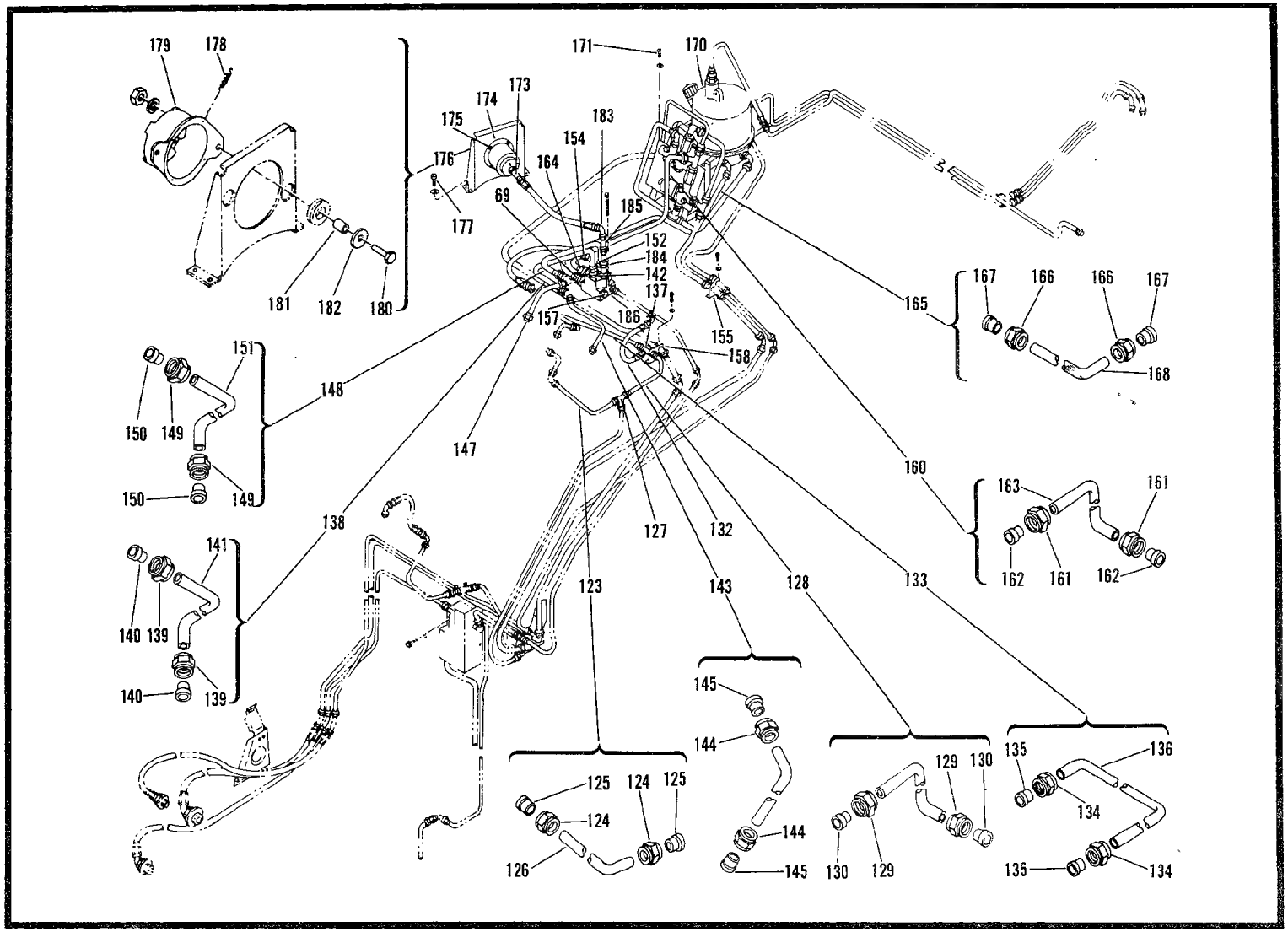

Figure 145. Automatic Stabilization Servo Hydraulic System Installation (USBL EFF 56-4313 and Subsequent) (Sheet 3 of 3)

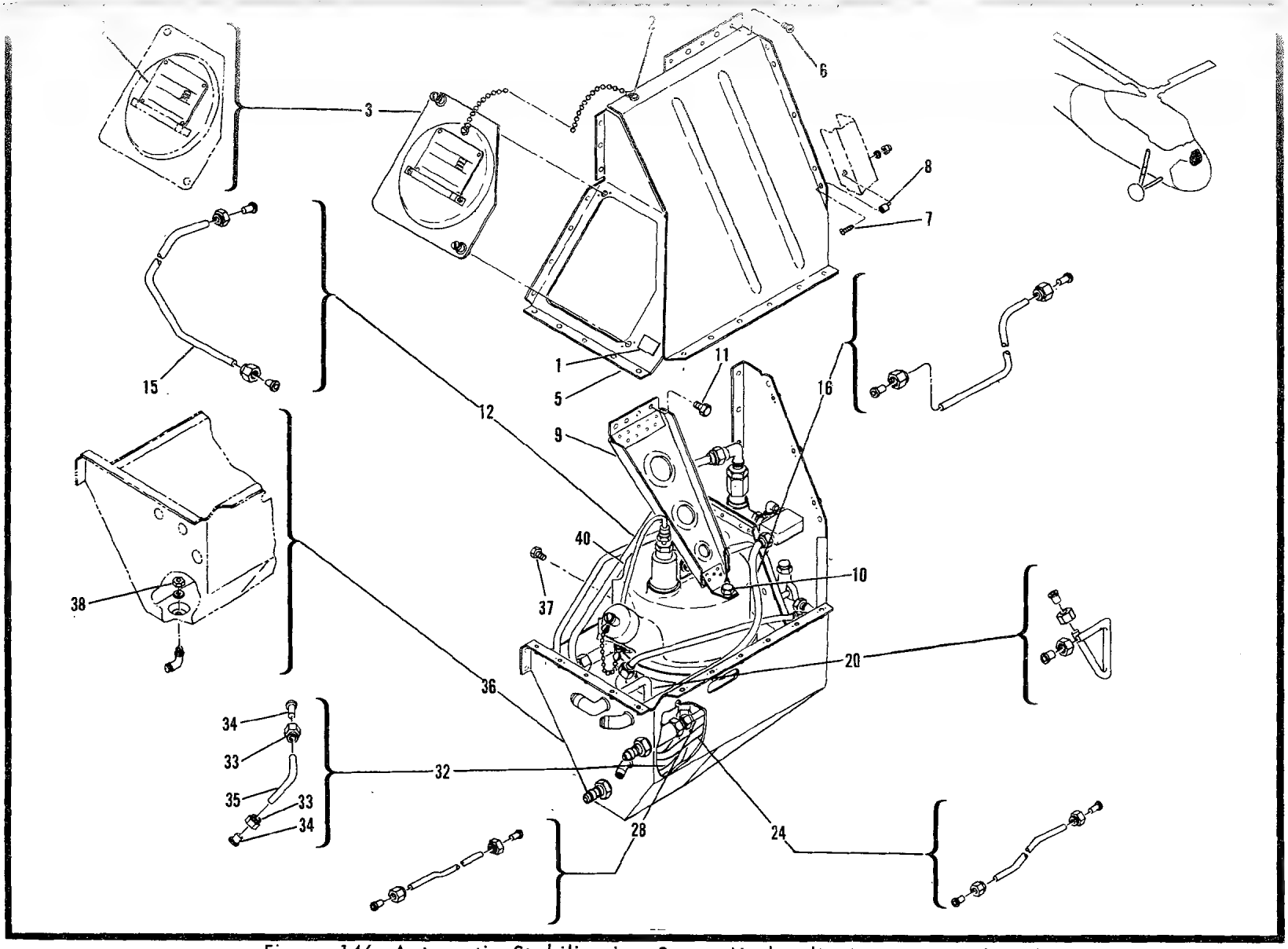

Figure 146. Automatic Stabilization Servo Hydraulic System Panel and Casing Installation (USBL EFF 53-4475 thru 56-4312)

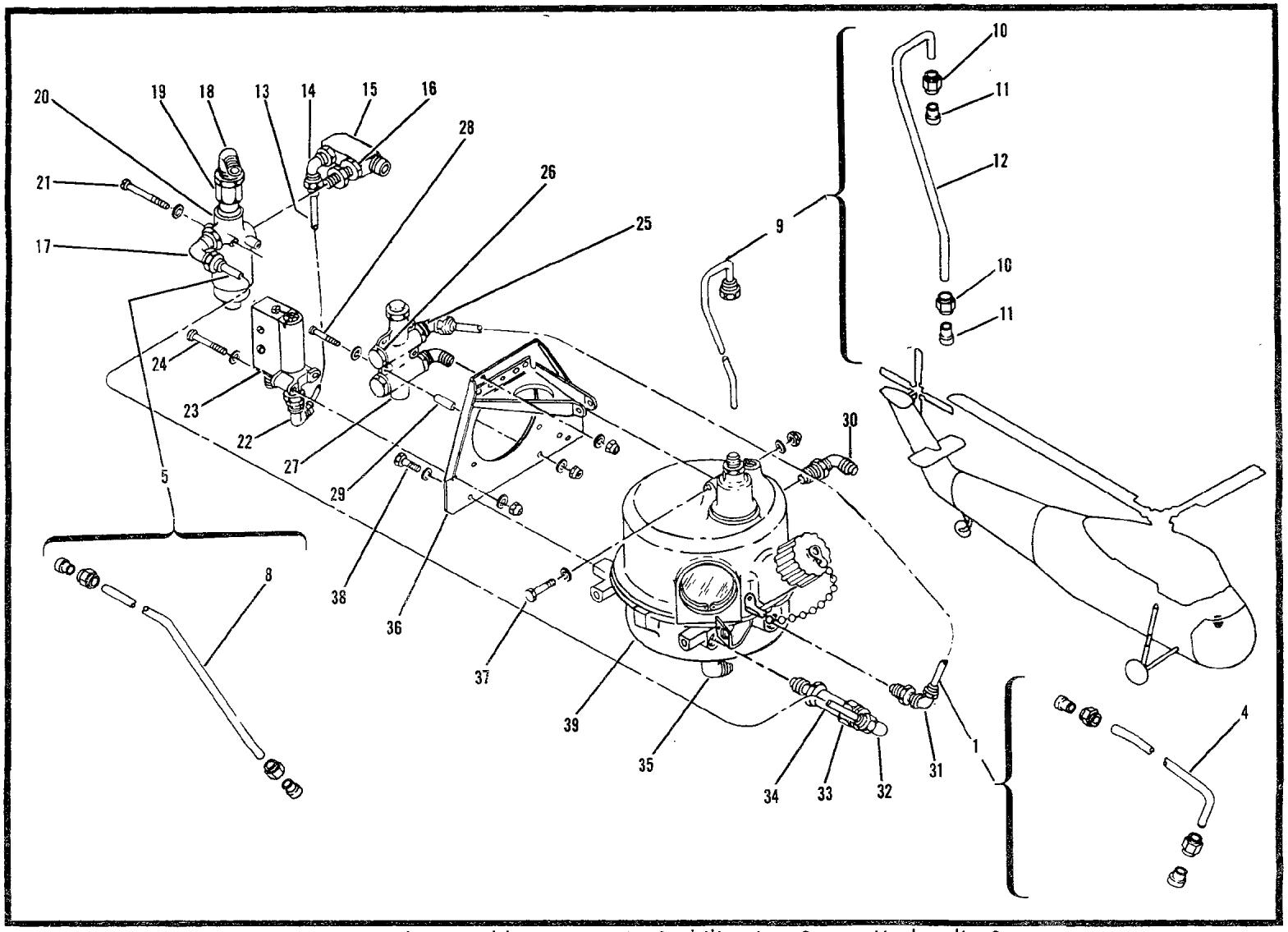

Figure 147 Panel Assembly-Automatic Stabilization Servo Hydraulic System
(USBL EFF 53-4554 Thru 56-4312)

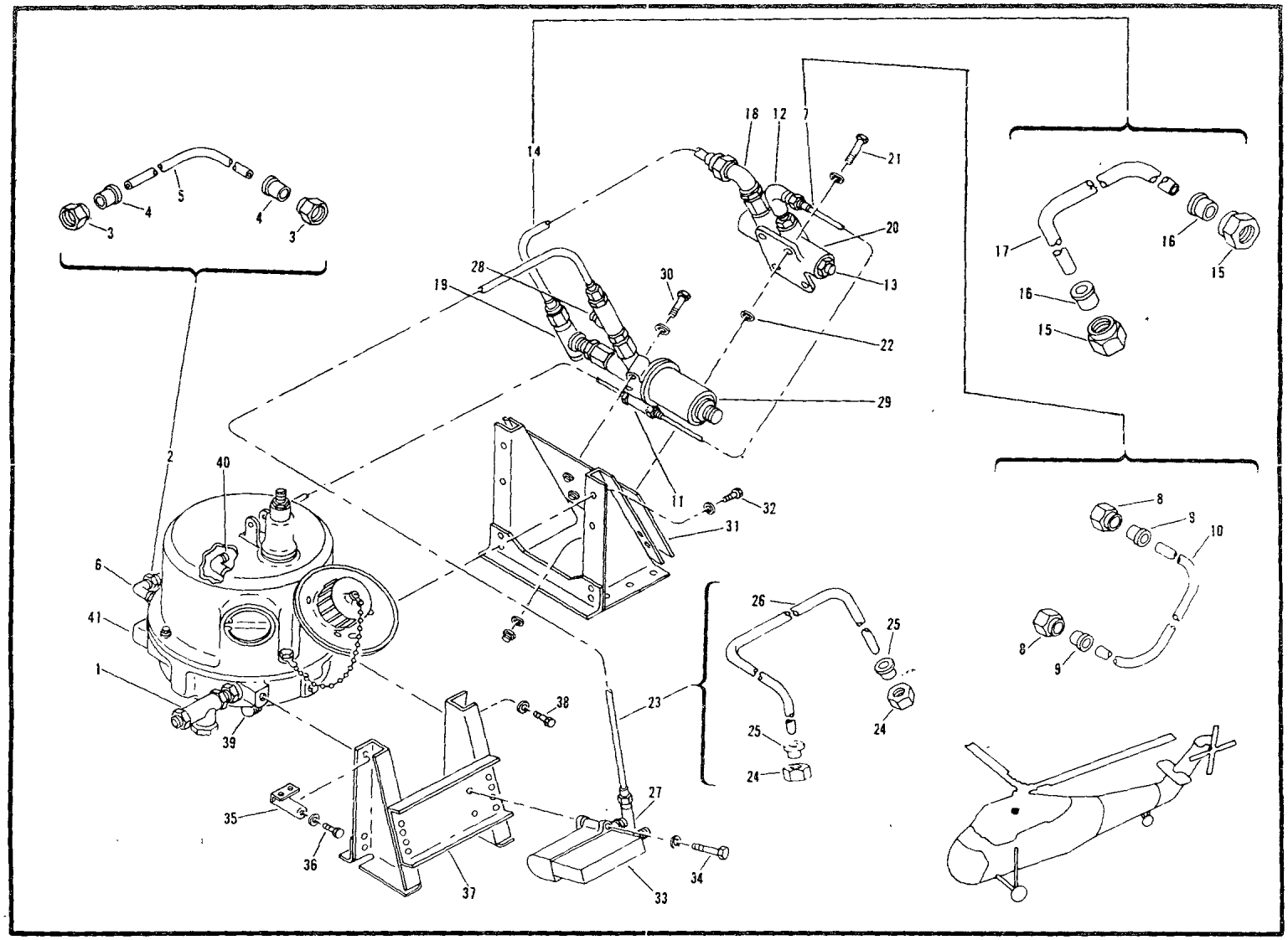

Figure 148. Panel Assembly – Automatic Stabilization Servo Hydraulic System (USBL EFF 56-4313 and Subsequent)

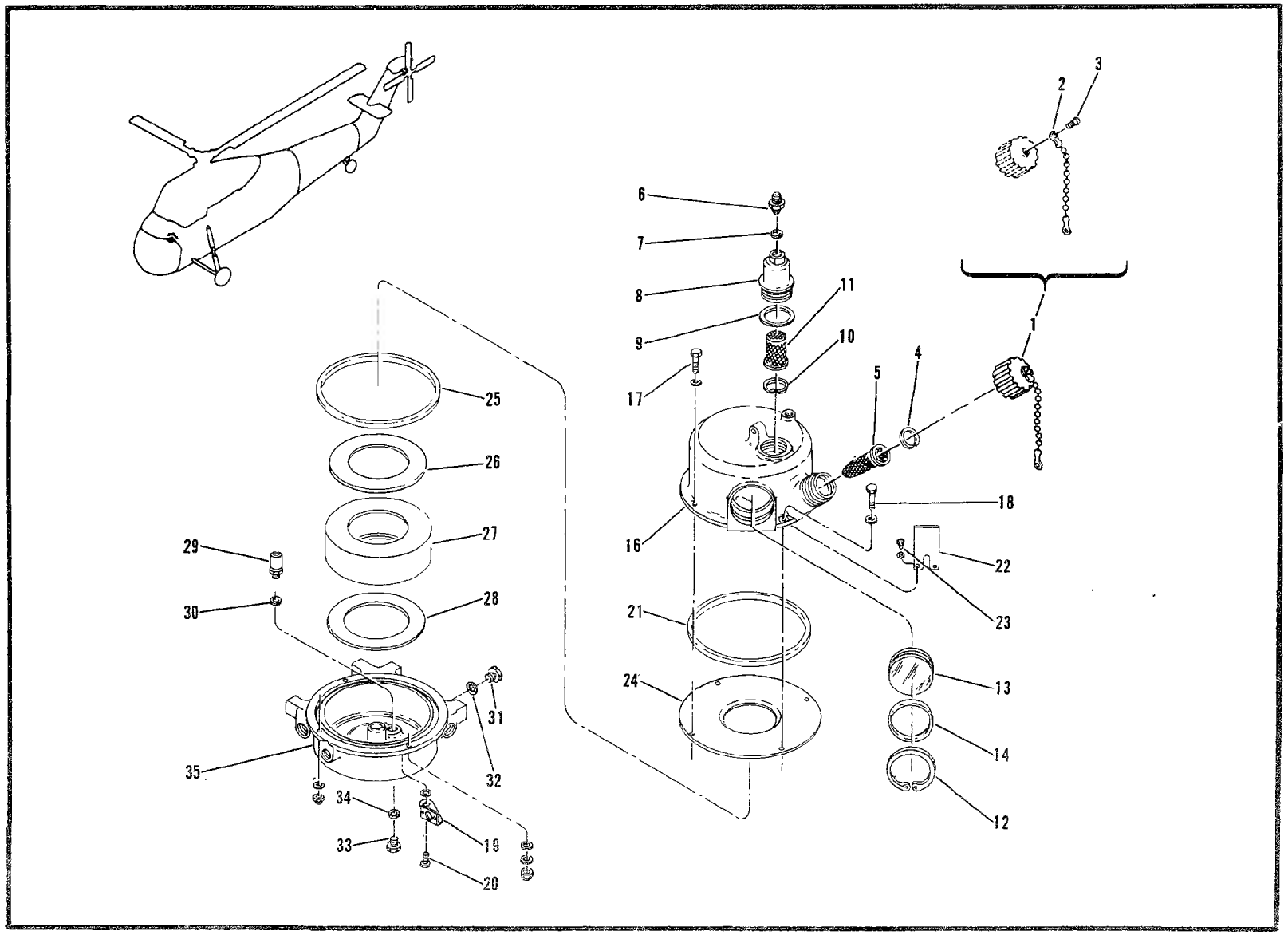

Figure 149. Reservoir Assembly—Automatic Stabilization Servo Hydraulic System

SECTION II

FUNCTIONAL GROUP 06

AFT SECTION
FUSELAGE AND EQUIPMENT

(1) SOURCE, MAINT AND REC CODE (a) SOURCE CODE	(b) MAINT LEVEL	(c) REC CODE	(2) FEDERAL STOCK NUMBER	REFERENCE NUMBER		(3) DESCRIPTION	MODELS USABLE ON CH-34C	(4) UNIT OF ISSUE	(5) QTY INC IN UNIT PACK	(6) QTY INC IN UNIT	(7) 30-DAY DS-GS MAINT ALW (a) 1-20	(b) 21-50	(c) 51-100	(8) 1-YR ALWPER 100 EQUIP CNTGCY	(9) DEPOT MAINT ALWPER 100 EQUIP	(10) ILLUSTRATION (a) FIG NO	(b) ITEM NO
				S1620-63000-3	<78286>	AFT SECTION TAIL CONE..... EQUIPMENT SEE FIG.39 FOR NHA		EA								150	
P	O		1560-563-9863	S1620-63174	<78286>	.RING,TIE DOWN..... ATTACHING PARTS		EA		2	*	*	2		*	150	1
			5306-584-5503	AN6CH17	<88044>	.BOLT,MACHINE.....		EA		2	*	*	*			150	2
			5310-167-0804	AN960C616	<88044>	.WASHER,FLAT.....		HD		4	*	*	*		*	150	
			5310-596-7173	AN310C6	<88044>	.NUT,CASTELLATED,HEXAGON.....		EA		2	*	*	*		*	150	
			5315-234-1864	MS24665-302	<96906>	.PIN,COTTER.....		HD		2	*	*	*		*	150	
						---*---											
				S1635-63000-1	<78286>	.AFT TRANSMISSION..... INSTALLATION SEE FIG.151 FOR BREAKDOWN				1						150	3
				S1655-63002	<78286>	.WIRING INSTALLATION-AFT.....				1						150	
				S1655-63002-1	<78286>	.WIRING INSTALLATION-AFT.....				1						150	
				S1655-63015	<78286>	..LIGHTS INSTALLATION.....				1						150	
P	O		6220-189-4797	AN3040-1B	<88044>	...LENS,AIRCRAFT,..... NAVIGATIONAL LIGHT,CLEAR ATTACHING PARTS		EA		1	*	*	*		REF	150	4
				AN507C440-10	<88044>	...SCREW.....		EA		5						150	5
			5310-550-5009	MS15795-704	<96906>	...WASHER,FLAT.....		HD		5					*	150	
			5310-088-0551	MS21044N04	<96906>	...NUT,SELF-LOCKING,HEXAGON..		EA		5	*	*	*		*	150	
						---*---											
P	O		6240-155-8714	MS25231-313	<96906>	...LAMP,INCANDESCENT.....		EA		1	REF	REF	REF		REF	150	6
P	O		6220-299-4759	AN3030-9A	<88044>	...LIGHT,NAVIGATION,..... AIRCRAFT		EA		1	*	*	*		REF	150	
P	O		6220-299-7140	AN3040-3B	<88044>	...LENS,AIRCRAFT..... NAVIGATIONAL LIGHT-RED ATTACHING PARTS		EA		1	*	*	*		*	150	7
				AN507C440-10	<88044>	...SCREW.....		EA		5						150	8
			5310-550-5009	MS15795-704	<88044>	...WASHER,FLAT.....		HD		5					*	150	
			5310-088-0551	MS21044N04	<96906>	...NUT,SELF-LOCKING,HEXAGON..		EA		5	*	*	*		*	150	
						---*---											
P	O		6240-155-8714	MS25231-313	<96906>	...LAMP,INCANDESCENT.....		EA		1	REF	REF	REF		REF	150	9
P	O		6220-299-4759	AN3030-9A	<88044>	...LIGHT,NAVIGATION,..... AIRCRAFT		EA		1	*	*	*		REF	150	
			1680-773-6265	S1640-63000	<78286>	..CONTROLS INSTALLATION .... DIRECTIONAL AND TAIL WHEEL LOCK SEE FIG. 152 FOR BREAKDOWN		EA		1	*	*	*			150	10
		R	1560-326-3453	S1620-63100	<78286>	.TAIL CONE ASSEMBLY RPL-BY.. 1560-947-3520										150	
		R	1560-575-2048	S1620-63100-14	<78286>	.TAIL CONE ASSEMBLY RPL-BY.. 1560-947-3520										150	
		R	1560-592-0610	S1620-63100-31	<78286>	.TAIL CONE ASSEMBLY RPL-BY.. 1560-947-3520										150	
		R	1560-626-1978	S1620-63100-27	<78286>	.TAIL CONE ASSEMBLY RPL-BY.. 1560-947-3520										150	
		R	1560-625-4515	S1620-63100-36	<78286>	.TAIL CONE ASSEMBLY RPL-BY.. 1560-947-3520										150	
P	F	R	1560-947-3520	S1620-63100-79	<78286>	.TAIL CONE ASSEMBLY RPLS--.. 1560-326-3453,		EA		1	*	*	2	7	*	150	11

(1) SOURCE, MAINT AND REC CODE (a) SOURCE CODE	(b) MAINT LEVEL	(c) REC CODE	(2) FEDERAL STOCK NUMBER	REFERENCE NUMBER	(3) DESCRIPTION	MODELS USABLE ON CH-34C	(4) UNIT OF ISSUE	(5) QTY INC IN UNIT PACK	(6) QTY INC IN UNIT	(7) 30-DAY DS/GS MAINT ALW (a) 1-20	(b) 21-50	(c) 51-100	(8) 1-YR ALW PER 100 EQUIP CNTGCY	(9) DEPOT MAINT ALW PER 100 EQUIP	(10) ILLUSTRATION (a) FIG NO	(b) ITEM NO
					CONTINUED 1560-575-2048, 1560-592-0610, 1560-625-4515,& 1560-626-1978										150	11
P	F		1730-632-4547	S1670-10482-9 <78286>	..FITTING ASSEMBLY,SADDLE.... ATTACHING PARTS		EA		1	*	*	*		*	150	12
				MS20470B5 <96906>	...RIVET..... ---*---		EA		4						150	
P	F		1560-563-9864	S1620-63244 <78286>	..FITTING ASSEMBLY,TOWING,... HANDLING,MOORING ATTACHING PARTS		EA		2	*	*	*		*	150	14
			5306-182-1854	AN3CH5A <88044>	..BOLT,MACHINE.....		EA		4	*	*	*		*	150	15
			5310-167-0753	AN960PD10L <88044>	..WASHER,FLAT.....		HD		8	*	*	*		*	150	
			5310-877-5797	MS21044N3 <96906>	..NUT,SELF-LOCKING,HEXAGON... ---*---		EA		4	*	*	*		*	150	
			1680-532-6678	AN7510-2 <88044>	..PLATE,IDENTIFICATION ... MODIFICATION ATTACHING PARTS		EA		1	*	*	*		*	150	16
				MS20470AD3 <96906>	..RIVET..... ---*---		EA		4						150	
P	F		1560-307-3567	S1520-63141 <78286>	..FITTING ASSEMBLY,TAIL CONE. ATTACHING PARTS		EA		1	*	*	*		*	150	18
				MS20470B4 <96906>	..RIVET,SOLID..... ---*---		EA		AR						150	19
				S1620-63052 <78286>	..PLATE INSTALLATION..... REINFORCEMENT				1						150	
				S1620-63052-1 <78286>	...PLATE-REINFORCEMENT..... ATTACHING PARTS		EA		1						150	20
				SPS07722-17 <56878>	...BOLT.....		EA		9						150	21
			5310-167-0753	AN960PD10L <88044>	...WASHER,FLAT.....		HD		18	*	*	*		*	150	
			5310-877-5797	MS21044N3 <96906>	...NUT,SELF-LOCKING,HEXAGON.. ---*---		EA		9	*	*	*		*	150	
				MS20470B6 <96906>	...RIVET..... ---*---		EA		9						150	
MF	F			S1620-63052-2 <78286>	...SHIM..... MAKER AR 9535-243-1875 SHIM		EA		AR						150	23
P	F		1560-563-9860	S1620-63100-22 <78286>	..SHIM,TAIL CONE ASSEMBLY....		EA		AR	*	*	*		*	150	24
				S1620-63100-13 <78286>	..SKIN INSTALLATION.....				1						150	
				S1620-63100-29 <78286>	..SKIN INSTALLATION.....				1						150	
				S1620-63100-37 <78286>	..SKIN INSTALLATION.....				1						150	
				S1620-63190-1 <78286>	...BRACKET INSTALLATION-LH...				1						150	
				S1620-63190-2 <78286>	...BRACKET INSTALLATION-RH...				1						150	
				S1620-63190-3 <78286>	....BRACKET..... ATTACHING PARTS		EA		1						150	
				MS20470B4 <96906>	....RIVET,SOLID..... ---*---		EA		4						150	
P	F		1560-332-3515	S1620-65159-4 <78286>	...HANDLE..... ATTACHING PARTS		EA		1	*	*	*		*	150	27
			5306-182-2059	AN3H6A <88044>	...BOLT,MACHINE.....		HD		2	*	*	*		*	150	28

(1) SOURCE, MAINT AND REC CODE (a) SOURCE CODE	(b) MAINT LEVEL	(c) REC CODE	(2) FEDERAL STOCK NUMBER	REFERENCE NUMBER	(3) DESCRIPTION	MODELS USABLE ON CH-34C	(4) UNIT OF ISSUE	(5) QTY INC IN UNIT PACK	(6) QTY INC IN UNIT	(7) 30-DAY DS/GS MAINT ALW (a) 1-20	(b) 21-50	(c) 51-100	(8) 1-YR ALW PER 100 EQUIP CNTGCY	(9) DEPOT MAINT ALW PER 100 EQUIP	(10) ILLUSTRATION (a) FIG NO	(b) ITEM NO
			5310-183-4406	AN960PD10	<88044> ...WASHER,FLAT.....		HD		4	*	*	*		*	150	
			5310-877-5797	MS21044N3	<96906> ...NUT,SELF-LOCKING,HEXAGON..		EA		2	*	*	*		*	150	
					---*---											
X2	F		1560-879-2479	S1620-63243	<78286> ...BRACKET,LOCATING U/O..... PN S1620-63100-29		EA		1	*	*	*			150	29
					ATTACHING PARTS											
				MS20470B5	<96906> ...RIVET.....		EA		4						150	
					---*---											
				S1620-63219	<78286> ...PLATE INSTALLATION-FLASH..				1						150	
P	F		1560-805-5105	S1620-63219-2	<78286> ....DOUBLER,FLASH PLATE..... INSTALLATION		EA		1	*	*	*		*	150	31
					ATTACHING PARTS											
				MS2047034	<96906> ....RIVET,SOLID.....		EA		16						150	
					---*---											
P	F		5330-732-1733	S1620-63219-3	<78286> ....GASKET,FLASH PLATE..... INSTALLATION		EA		1	2	2	3		*	150	33
P	F		1560-675-5768	S1620-63219-1	<78286> ....PLATE,FACE AFT SECTION... DASH		EA		1	*	*	*		*	150	34
					ATTACHING PARTS											
				MS20470B5	<96906> ....RIVET.....		EA		36						150	
				MS20470B4	<96906> ....RIVET,SOLID.....		EA		9						150	
					---*---											
X2	F			S1620-61352-1	<78286> ...CLIP.....		EA		1						150	
					ATTACHING PARTS											
				MS20470AD5-7	<96906> ...CLIP.....		EA		1						150	
					ATTACHING PARTS											
				MS20470AD5-7	<96906> ...RIVET,SOLID.....		LB		2						150	
					---*---											
X2	F			S1620-61352-2	<78286> ...CLIP.....		EA		1						150	
					ATTACHING PARTS											
				MS20470AD5-7	<96906> ...RIVET,SOLID.....		LB		2						150	
					---*---											
X2	F			S1620-61525-1	<78286> ...CLIP.....		EA		1						150	
					ATTACHING PARTS											
				MS20470AD5-7	<96906> ...RIVET,SOLID.....		LB		2						150	
					---*---											
X2	F			S1620-61353-1	<78286> ...CLIP.....		EA		1						150	
					ATTACHING PARTS											
				MS20470AD5-7	<96906> ...RIVET,SOLID.....		LB		2						150	
					---*---											
X2	F			S1620-61526-2	<78286> ...CLIP.....		EA		1						150	
					ATTACHING PARTS											
				MS20470AD5-7	<96906> ...RIVET,SOLID.....		LB		2						150	
					---*---											
			1560-591-6751	S1620-63245	<78286> ... ANGLE-FITTING		EA		2	*	*	*			150	37
					ATTACHING PARTS											
			5306-559-8143	AN3DDH6A	<88044> ...BOLT,MACHINE.....		EA		4	*	*	*		*	150	38
			5310-167-0753	AN960PD10L	<88044> ...WASHER,FLAT.....		HD		4	*	*	*		*	150	
			5310-877-5798	MS21044D3	<96906> ...NUT,SELF-LOCKING,HEXAGON..		EA		4	*	*	*		*	150	
					---*---											
P	F		1560-326-3431	S1620-61561-1	<78286> ...ROD ASSEMBLY,NOSE DOOR.... LOCK		EA		2	*	*	*		*	150	39

(1) SOURCE, MAINT AND REC CODE (a) SOURCE CODE	(b) MAINT CODE	(c) REC CODE	(2) FEDERAL STOCK NUMBER	REFERENCE NUMBER	(3) DESCRIPTION	MODELS USABLE ON CH-34C	(4) UNIT OF ISSUE	(5) QTY INC IN UNIT PACK	(6) QTY INC IN UNIT	(7) 30-DAY DS GS MAINT ALW (a) 1-20	(b) 21-50	(c) 51-100	(8) 1-YR ALW PER 100 EQUIP CNTGCY	(9) DEPOT MAINT ALW PER 100 EQUIP	(10) ILLUSTRATION (a) FIG NO	(b) ITEM NO
					CONTINUED										150	39
					ATTACHING PARTS											
			5315-811-1241	MS20392-2C17 <96906>	...PIN,STRAIGHT,HEADED.....		EA		2	*	*	*		*	150	40
			5310-183-4406	AN960PD10 <88044>	...WASHER,FLAT.....		HD		2	*	*	*		*	150	
			5315-234-1856	MS24665-155 <96906>	...PIN,COTTER.....		HD		2	*	*	*		*	150	
					---*---											
P	F		1560-326-3432	S1620-61562-1 <78286>	...CLIP,LOCK ROD,TAIL.....		EA		2	*	*	*		*	150	41
					ATTACHING PARTS											
				MS20470B4 <96906>	...RIVET,SOLID.....		EA		2						150	
					---*---											
				S1620-63157-11 <78286>	...STIFFENER-LH.....		EA		1						150	
				S1620-63157-12 <78286>	...STIFFENER-RH.....		EA		1						150	
					ATTACHING PARTS											
				MS20470B4 <96906>	...RIVET,SOLID.....		EA		10						150	
				MS20470B5 <96906>	...RIVET.....		EA		2						150	
					---*---											
				S1620-63157-9 <78286>	...STIFFENER-LH.....		EA		1						150	
				S1620-63157-10 <78286>	...STIFFENER-RH.....		EA		1						150	
					ATTACHING PARTS											
				MS20470B4 <96906>	...RIVET,SOLID.....		EA		9						150	
				MS20470B5 <96906>	...RIVET.....		EA		2						150	
					---*---											
				S1620-63157-13 <78286>	...CLIP.....		EA		2						150	
					ATTACHING PARTS											
				MS20470B5 <96906>	...RIVET.....		EA		2						150	
					---*---											
				S1620-63101 <78286>	..SKELETON ASSEMBLY.....		EA		1						150	
				S1620-63102 <78286>	...FRAME INSTALLATION.....				1						150	
				S1620-63102-1 <78286>	....FRAME ASSEMBLY.....		EA		1						150	
X2	F			S1620-63102-3 <78286>	....FRAME.....		EA		1						150	
MF	F			S1620-61694 <78286>	.....FAIRLEAD,TAIL WHEEL LOCK		EA		1						150	51
					MAKEFR											
					AR 9330-576-3984 PLASTIC SH											
					ATTACHING PARTS											
				MS20426AD4 <96906>	.....RIVET.....		EA		2						150	
					---*---											
				S1620-63211 <78286>	...SUPPORT INSTALLATION.....				1						150	
				S1620-63215-1 <78286>	....ANGLE USBL EFF 53-4475..		EA		1						150	
					THRU 56-4432											
				S1620-63215-6 <78286>	....ANGLE USBL EFF 56-4433 &		EA		1						150	
					SUBSEQUENT											
					ATTACHING PARTS											
			5306-182-2056	AN3H3A <88044>	....BOLT,MACHINE.....		HD		2	*	*	*		*	150	
			5310-183-4406	AN960PD10 <88044>	....WASHER,FLAT.....		HD		4	*	*	*		*	150	
			5310-877-5797	MS21044N3 <96906>	....NUT,SELF-LOCKING,HEXAGON.		EA		2	*	*	*		*	150	
					---*---											
				S1620-63215-2 <78286>	....ANGLE.....		EA		1						150	
					ATTACHING PARTS											
			5306-182-2056	AN3H3A <88044>	....BOLT,MACHINE.....		HD		2	*	*	*		*	150	
			5310-183-4406	AN960PD10 <88044>	....WASHER,FLAT.....		HD		4	*	*	*		*	150	
			5310-877-5797	MS21044N3 <96906>	....NUT,SELF-LOCKING,HEXAGON.		EA		2	*	*	*		*	150	
					---*---											

(1) SOURCE, MAINT AND REC CODE (a) SOURCE CODE	(b) MAINT LEVEL	(c) REC CODE	(2) FEDERAL STOCK NUMBER	REFERENCE NUMBER		(3) DESCRIPTION	MODELS USABLE ON CH-34C	(4) UNIT OF ISSUE	(5) QTY INC IN UNIT PACK	(6) QTY INC IN UNIT	(7) 30-DAY DS GS MAINT ALW (a) 1-20	(b) 21-50	(c) 51-100	(8) 1-YR ALWPER 100 EQUIP CNTGCY	(9) DEPOT MAINT ALWPER 100 EQUIP	(10) ILLUSTRATION (a) FIG NO	(b) ITEM NO
				S1620-63215-3	<78286>	....ANGLE.....		EA		1						150	
						ATTACHING PARTS											
			5306-182-2056	AN3H3A	<88044>	....BOLT,MACHINE.....		HD		4	*	*	*		*	150	
			5310-183-4406	AN960PD10	<88044>	....WASHER,FLAT.....		HD		8	*	*	*		*	150	
			5310-877-5797	MS21044N3	<96906>	....NUT,SELF-LOCKING,HEXAGON.		EA		4	*	*	*		*	150	
						---*---											
X2	F		1560-931-2276	S1620-63216-1	<78286>	....INTERCOSTAL ASSEMBLY.....		EA		1	*	*	*		*	150	59
						ATTACHING PARTS											
				MS20470B4	<96906>	....RIVET,SOLID.....		EA		9						150	
						---*---											
P	F		1560-537-2087	S1650-61806-12	<78286>	....CLAMP ASSEMBLY,IGNITION..		EA		1	*	*	*		*	150	61
						UNIT											
			1560-537-2087	61-297	<13027>	ADDED PART NO.FOR ABOVE ITEM.		EA			*	*	*			150	61
						ATTACHING PARTS											
				MS20470B4	<96906>	....RIVET,SOLID.....		EA		2						150	
				MS20426B4	<96906>	....RIVET.....		EA		2						150	
						---*---											
P	F		1660-532-3698	S1650-61806-11	<78286>	....CLAMP ASSEMBLY,IGNITION..		EA		1	*	*	*		*	150	64
						UNIT											
						ATTACHING PARTS											
				MS20470B4	<96906>	....RIVET,SOLID.....		EA		2						150	
				MS20426B4	<96906>	....RIVET.....		EA		2						150	
						---*---											
				S1620-63103	<78286>	...FRAME INSTALLATION.....				1						150	
				S1620-63103-1	<78286>	....FRAME ASSEMBLY.....		EA		1						150	
MF	F			S1620-61694	<78286>	.....FAIRLEAD,TAIL WHEEL LOCK		EA		1						150	67
						MAKEFR											
						AR 9330-576-3984 PLASTIC SH											
				MS20470B4	<96906>	.....RIVET,SOLID.....		EA		2						150	
						---*---											
				S1620-63179	<78286>	...BRACKET INSTALLATION.....				1						150	
				S1620-63104	<78286>	...FRAME INSTALLATION.....				1						150	
P	F		1560-765-7787	S1620-63161	<78286>	....BEARING SUPPORT.....		EA		1	*	*	*		REF	150	
				S1620-63104-1	<78286>	....FRAME ASSEMBLY.....		EA		1						150	
MF	F			S1620-61694	<78286>	.....FAIRLEAD,TAIL WHEEL LOCK		EA		1						150	69
						MAKEFR											
						AR 9330-576-3984 PLASTIC SH											
				MS20470B4	<96906>	.....RIVET,SOLID.....		EA		2						150	
						---*---											
				S1620-63105	<78286>	...FRAME INSTALLATION.....				1						150	
				S1620-63124	<78286>	....CHANNEL-SPLICE.....		EA		1						150	
						ATTACHING PARTS											
				MS20470B5	<96906>	....RIVET.....		EA		22						150	
						---*---											
				S1620-63154	<78286>	....CHANNEL-SPLICE.....		EA		1						150	
						ATTACHING PARTS											
				MS20470B5	<96906>	....RIVET.....		EA		24						150	
						---*---											
				S1620-63105-1	<78286>	....FRAME ASSEMBLY.....		EA		1						150	
MF	F			S1620-61694	<78286>	.....FAIRLEAD,TAIL WHEEL LOCK		EA		1						150	75
						MAKEFR											
						AR 9330-576-3984 PLASTIC SH											

(1) SOURCE, MAINT AND REC CODE (a) SOURCE CODE	(b) MAINT LEVEL	(c) RECOVERY CODE	(2) FEDERAL STOCK NUMBER	REFERENCE NUMBER		(3) DESCRIPTION	MODELS USABLE ON CH-34C	(4) UNIT OF ISSUE	(5) QTY INC IN UNIT PACK	(6) QTY INC IN UNIT	(7) 30-DAY DS GS MAINT ALW (a) 1-20	(b) 21 50	(c) 51 100	(8) 1-YR ALW PER 100 EQUIP CNTGCY	(9) DEPOT MAINT ALW PER 100 EQUIP	(10) ILLUSTRATION (a) FIG NO	(b) ITEM NO
				MS20470B4	<96906>	.....RIVET,SOLID.....		EA		2						150	
						---*---											
				S1620-63170-1	<78286>	...CLIP.....		EA		1						150	
						ATTACHING PARTS											
				MS20470B5	<96906>	...RIVET.....		EA		4						150	
						---*---											
				S1620-63106	<78286>	...FRAME INSTALLATION.....				1						150	
P	F		1560-708-0869	S1620-63161-1	<78286>	....BEARING SUPPORT.....		EA		1	*	*	*		*	150	79
			1560-708-0869	L1560-708-0869	<13803>	ADDED PART NO.FOR ABOVE ITEM.		EA			*	*	*			150	79
						ATTACHING PARTS											
				MS20470B5	<96906>	....RIVET.....		EA		6						150	
						---*---											
				S1620-63106-1	<78286>	....FRAME ASSEMBLY.....		EA		1						150	
				S1620-63199	<78286>	.....BRACKET INSTALLATION....				1						150	
				S1620-63200-1	<78286>	.....BRACKET.....		EA		1						150	
						ATTACHING PARTS											
				MS20470B5	<96906>	.....RIVET.....		EA		2						150	
						---*---											
				S1620-63200-2	<78286>	.....BRACKET.....		EA		1						150	
						ATTACHING PARTS											
				MS20470B5	<96906>	.....RIVET.....		EA		2						150	
						---*---											
				S1620-63107	<78286>	...BULKHEAD INSTALLATION.....				1						150	
P	F		1560-708-0869	S1620-613161-1	<78286>	....BEARING SUPPORT.....		EA		1	*	*	*		REF	150	
P	F		1560-326-3457	S1620-63158-1	<78286>	....FITTING ASSEMBLY,.....		EA		1	*	*	*		*	150	85
						FUSELAGE											
						ATTACHING PARTS											
				MS20470B4	<96906>	....RIVET,SOLID.....		EA		5						150	
						---*---											
				S1620-63107-1	<78286>	....BULKHEAD ASSEMBLY.....		EA		1						150	
P	F		1560-516-8908	S1620-61514	<78286>	.....ADAPTER,AIRCRAFT.....		EA		1	*	*	*		*	150	87
						JACKING POINT											
						ATTACHING PARTS											
			5306-180-2756	AN5H17	<88044>	.....BOLT,MACHINE.....		HD		1	*	*	*		*	150	88
			5310-167-0803	AN960C516	<88044>	.....WASHER,FLAT.....		HD		1	*	*	*		*	150	
			5310-660-3381	MS21083N5	<96906>	.....NUT,SELF-LOCKING,HEXAGON				1					*	150	
				MS20470B5	<96906>	.....RIVET.....		EA		6						150	
						---*---											
P	F		1560-336-0764	S1620-61516	<78286>	.....FITTING ASSEMBLY,TAIL...		EA		1	*	*	*		*	150	90
						WHEEL											
						ATTACHING PARTS											
P	F		5320-038-3265	ALPPHT8-8	<29666>	.....PIN,RIVET.....		EA		12					REF	150	91
P	F		5320-489-4824	LCC8	<29666>	.....COLLAR,RIVET PIN.....		EA		12	*	*	*		REF	150	
				MS20470B5	<96906>	.....RIVET.....		EA		28						150	
			5306-559-8134	AN3DDH5A	<88044>	.....BOLT,MACHINE.....		EA		2	*	*	*		*	150	93
			5310-167-0753	AN960PD10L	<88044>	.....WASHER,FLAT.....		HD		2	*	*	*		*	150	
			5310-877-5798	MS21044D3	<96906>	.....NUT,SELF-LOCKING,HEXAGON		EA		2	*	*	*		*	150	
						---*---											
AF	F			S1620-63109	<78286>	...BULKHEAD ASSEMBLY.....		EA		1						150	94
X2	F		1560-768-0331	S1620-63171-9	<78286>	....ANGLE,FUSELAGE,AFT.....		EA		1	*	*	*		*	150	
						SECTION											
X2	F		1560-772-5540	S1620-63171-10	<78286>	....ANGLE,FUSELAGE,AFT.....		EA		1	*	*	*		*	150	

(1) SOURCE, MAINT AND REC CODE (a) SOURCE CODE	(b) MAINT LEVEL	(c) REC CODE	(2) FEDERAL STOCK NUMBER	REFERENCE NUMBER		(3) DESCRIPTION	MODELS USABLE ON CH-34C	(4) UNIT OF ISSUE	(5) QTY INC IN UNIT PACK	(6) QTY INC IN UNIT	(7) 30-DAY DS GS MAINT ALW (a) 1-20	(b) 21-50	(c) 51-100	(8) 1-YR ALW PER 100 EQUIP CNTGCY	(9) DEPOT MAINT ALW PER 100 EQUIP	(10) ILLUSTRATION (a) FIG NO	(b) ITEM NO
						CONTINUED										150	
						SECTION											
			1560-326-3454	S1620-63130-2	<78286>	....HINGE ASSEMBLY RPL-BY...										150	
						1560-987-3296											
P	H		1560-987-3296	S1620-63130-12	<78286>	....HINGE ASSEMBLY,UPPER.....		EA		1	*	*	*		*	150	95
						RPLS-- 1560-326-3454											
						ATTACHING PARTS											
				MS20470AD5	<96906>	....RIVET.....		EA		28						150	
						---*---											
			1560-662-7566	S1620-63129-1	<78286>	.....BEARING,SLEEVE RPL-BY..										150	
						3120-682-2397											
P	F		3120-682-2397	S1620-63129-8	<78286>	.....BUSHING RPLS--.....		EA		4	2	2	4		*	150	97
						1560-662-7566											
			1560-326-3455	S1620-63130-3	<78286>	....HINGE ASSEMBLY,FUSELAGE..										150	
						SECTION RPL-BY											
						5340-955-9653											
P	H		5340-955-9653	S1620-63130-13	<78286>	....HINGE ASSEMBLY,FUSELAGE..		EA		1	*	*	*		*	150	98
						RPLS-- 1560-326-3455											
						ATTACHING PARTS											
				MS20470AD5	<96906>	....RIVET.....		EA		20						150	
				MS20470AD6	<96906>	....RIVET.....		EA		6						150	
						---*---											
P	F		3120-682-2397	S1620-63129-8	<78286>	.....BUSHING RPLS--.....		EA		1	REF	REF	REF		REF	150	101
						1560-662-7566											
P	F		1560-326-3456	S1620-63131	<78286>	....FITTING ASSEMBLY,BULKHEAD		EA		1	*	*	*		*	150	102
						ATTACHING PARTS											
			5306-182-1855	AN3CH6A	<88044>	....BOLT,MACHINE.....		EA		8	*	*	*		*	150	103
			5310-167-0753	AN960PD10L	<88044>	....WASHER,FLAT.....		HD		16	*	*	*		*	150	
			5310-807-1467	MS21042-3	<96906>	....NUT,SELF-LOCKING,HEXAGON.				8					*	150	
						---*---											
				MS20470AD5	<96906>	....RIVET.....		EA		2						150	
				MS20470AD6	<96906>	....RIVET.....		EA		2						150	
						---*---											
				S1620-63121	<78286>	...WEB INSTALLATION-.....				1						150	
						HORIZONTAL											
				S1625-50156	<78286>	....CHAIN ASSEMBLY.....		EA		1						150	106
						ATTACHING PARTS											
				MS20470B4	<96906>	....RIVET,SOLID.....		EA		1						150	
						---*---											
				S1620-63156	<78286>	...CATWALK INSTALLATION.....				1						150	
X2	F		1560-591-6534	S1620-63156-2	<78286>	....FLOOR,FUSELAGE-AFT.....		EA		1	*	*	*		*	150	108
						ATTACHING PARTS											
			5305-206-1201	AN525-10R14	<88044>	....SCREW,MACHINE.....		HD		8	*	*	*		*	150	109
						---*---											
				AN526C1032	<88044>	....SCREW.....		EA		4						150	
						---*---											
X2	F			S1620-63227	<78287>	....ADAPTER,FUSELAGE-AFT.....		EA		1						150	
P	F		1560-591-6533	S1620-63156-1	<78286>	....FLOOR,FUSELAGE.....		EA		1	*	*	*		*	150	111
						ATTACHING PARTS											
			5305-206-1201	AN525-10R14	<88044>	....SCREW,MACHINE.....		HD		16	*	*	*		*	150	112
						---*---											
				S1620-63192	<78286>	...SUPPORT INSTALLATION.....				1						150	

(1) SOURCE, MAINT AND REC CODE (a) SOURCE CODE	(b) MAINT LEVEL	(c) REC CODE	(2) FEDERAL STOCK NUMBER	REFERENCE NUMBER	(3) DESCRIPTION	MODELS USABLE ON CH-34C	(4) UNIT OF ISSUE	(5) QTY INC IN UNIT PACK	(6) QTY INC IN UNIT	(7) 30-DAY DS GS MAINT ALW (a) 1-20	(b) 21-50	(c) 51-100	(8) 1-YR ALW PER 100 EQUIP CNTGCY	(9) DEPOT MAINT ALW PER 100 EQUIP	(10) ILLUSTRATION (a) FIG NO	(b) ITEM NO
				S1620-63193	<78286> ....SUPPORT ASSEMBLY.....		EA		1						150	
					ATTACHING PARTS											
				MS20470B4	<96906> ....RIVET,SOLID.....		EA		4						150	
					---*---											
				S1620-63195	<78286> ....STRAP.....		EA		1						150	
					ATTACHING PARTS											
				MS20470AD4	<96906> ....RIVET.....		EA		4						150	
					---*---											
				S1620-63194	<78286> ....SUPPORT.....		EA		1						150	
				S1620-63168-1	<78286> ...BRACKET INSTALLATION.....				1						150	
				S1620-63167	<78286> ....BRACKET ASSEMBLY.....		EA		1						150	
				S1620-63262	<78286> ....BRACKET ASSEMBLY.....		EA		1						150	
					ATTACHING PARTS											
				MS20470AD4	<96906> ....RIVET.....		EA		6						150	
					---*---											
				S1620-63167-1	<78286> .....SUPPORT ASSEMBLY.....		EA		1						150	
				S1620-63262-1	<78286> .....SUPPORT ASSEMBLY.....		EA		1						150	
					ATTACHING PARTS											
				MS20470AD4	<96906> .....RIVET.....		EA		4						150	
					---*---											
			5310-272-7041	AN366DF632A	<88044> .....NUT,SELF-LOCKING,PLATE.		EA		3	*	*	*		*	150	122
					ATTACHING PARTS											
				MS20426AD3	<96906> .....RIVET.....		EA		6						150	
					---*---											
				S1620-63167-3	<78286> .....SUPPORT.....		EA		1						150	
				S1620-63262-2	<78286> .....SUPPORT.....		EA		1						150	
				S1620-63167-2	<78286> .....ANGLE.....		EA		1						150	
				S1635-63000-1	<78286> AFT TRANSMISSION INSTALLATION										151	
					SEE FIG.150 FOR NHA											
			5306-182-1964	AN4H16A	<88044> .BOLT,MACHINE.....		HD		8	*	*	*		*	151	1
			5310-194-0637	MS9320-10	<96906> .WASHER,THRUST.....		EA		16	*	*	*		*	151	
			5310-141-1795	AN960-416	<88044> .WASHER,FLAT.....		HD		4	*	*	*		*	151	
			5310-543-4443	MS20364-428A	<96906> .NUT,SELF-LOCKING,HEXAGON....		HD		8	*	*	*		*	151	
			5306-182-2016	AN4H5A	<88044> .BOLT,MACHINE.....		HD		4	*	*	*		*	151	2
			5310-194-0637	MS9320-10	<96906> .WASHER,THRUST.....		EA		8	*	*	*		*	151	
			5310-543-4443	MS20364-428A	<96906> .NUT,SELF-LOCKING,HEXAGON....		HD		4	*	*	*		*	151	
P	F		1560-301-3561	S1635-61205	<78286> .RING,HALF,TAIL ROTOR DRIVE..		EA		2	REF	REF	REF		REF	151	3
					SHAFT BEARING											
P	F		1615-626-8454	S1620-61189-4	<78286> .BEARING SUPPORT,DRIVE.....		EA		2	*	REF	REF		REF	151	4
			5306-182-1964	AN4H16A	<88044> .BOLT,MACHINE.....		HD		4	*	*	*		*	151	5
			5310-194-0637	AN122582	<88044> .WASHER,THRUST.....		EA		8	*	*	*		*	151	
			5310-141-1795	AN960-416	<88044> .WASHER,FLAT.....		HD		4	*	*	*		*	151	
			5310-543-4443	MS20364-428A	<96906> .NUT,SELF-LOCKING,HEXAGON....		HD		4	*	*	*		*	151	
			5306-182-2016	AN4H5A	<88044> .BOLT,MACHINE.....		HD		2	*	*	*		*	151	6
			5310-194-0637	MS9320-10	<96096> .WASHER,THRUST.....		EA		4	*	*	*		*	151	
			5310-543-4443	MS20364-428A	<96906> .NUT,SELF-LOCKING,HEXAGON....		HD		2	*	*	*		*	151	

(1) SOURCE, MAINT AND REC CODE (a) SOURCE CODE	(b) MAINT LEVEL	(c) REC CODE	(2) FEDERAL STOCK NUMBER	REFERENCE NUMBER		(3) DESCRIPTION	MODELS USABLE ON CH-34C	(4) UNIT OF ISSUE	(5) QTY INC IN UNIT PACK	(6) QTY INC IN UNIT	(7) 30-DAY DS GS MAINT ALW (a) 1-20	(b) 21-50	(c) 51-100	(8) 1-YR ALW PER 100 EQUIP CNTGCY	(9) DEPOT MAINT ALW PER 100 EQUIP	(10) ILLUSTRATION (a) FIG NO	(b) ITEM NO
P	F		1560-301-3561	S1635-61205	<78286>	.RING,HALF,TAIL ROTOR DRIVE.. SHAFT		EA		1	REF	REF	REF		REF	151	7
P	F		1560-766-4849	S1620-61189-7	<78286>	.PLATE ASSEMBLY,BEARING..... SUPPORT		EA		1	*	*	2		*	151	8
			5306-182-1964	AN4H16A	<88044>	.BOLT,MACHINE.....		HD		6	*	*	*		*	151	9
			5310-184-9001	AN960PD416L	<88044>	.WASHER,FLAT.....		HD		12	*	*	*		*	151	
			5310-194-0637	MS9320-10	<96906>	.WASHER,THRUST.....		EA		12		*	*		*	151	
			5310-543-4443	MS20364-428A	<96906>	.NUT,SELF-LOCKING,HEXAGON....		HD		6	*	*	*		*	151	
			5306-182-2016	AN4H5A	<88044>	.BOLT,MACHINE.....		EA		2		*	*		*	151	
P	F		1560-301-3561	S1635-61205	<78286>	.RING,HALF,TAIL ROTOR DRIVE.. SHAFT		EA		1	REF	REF	REF		REF	151	10
AF	F			S1635-63001-2	<78286>	.SHAFT ASSEMBLY.....		EA		1						151	11
			1560-613-3025	S1635-63001-3	<78286>	.SHAFT ASSEMBLY RPL-BY..... 1560-987-3335										151	
P	F		1560-987-3335	S1635-63001-5	<78286>	.SHAFT ASSEMBLY RPLS--..... 1560-613-3025		EA		1	*	2	2		*	151	
P	F		1615-034-6179	S1635-63350-4	<78286>	..COUPLING,HALF-SHAFT..... RPLS-- 1615-310-1418, 1615-310-4199,& 1615-522-8896 ATTACHING PARTS		EA		1	REF	REF	REF		REF	151	12
			5306-180-2721	AN5H26	<88044>	..BOLT,MACHINE.....		EA		2	*	*	*		*	151	13
P	F		5310-596-9485	S1635-63353	<78286>	..WASHER,FLAT.....		EA		4	*	*	*		REF	151	14
			5310-088-0553	MS21044N5	<96906>	..NUT,SELF-LOCKING,HEXAGON... ---*---		HD		2	*	*	*		*	151	15
P	F		1560-308-3534	S1635-63352	<78286>	..WEDGE,TAIL ROTOR DRIVE..... SHAFT		EA		4	REF	REF	REF		REF	151	16
P	F		1560-307-3651	S1635-63351	<78286>	..BUSHING,SLEEVE.....		EA		2	REF	REF	REF		REF	151	17
P	F		1560-323-4306	S1635-63304	<78286>	..COUPLING ASSEMBLY,TAIL..... ATTACHING PARTS		EA		1	*	*	2		*	151	18
			5306-180-2721	AN5H26	<88044>	..BOLT,MACHINE.....		EA		2	*	*	*		*	151	19
P	F		5310-596-9485	S1635-63353	<78286>	..WASHER,FLAT.....		EA		4	*	*	*		REF	151	20
			5310-088-0553	MS21044N5	<96906>	..NUT,SELFLOCKING,HEXAGON.... ---*---		HD		2	*	*	*		*	151	21
P	F		1560-307-3647	S1635-63317	<78286>	...COVER,COUPLING..... TRANSMISSION ATTACHING PARTS		EA		1	*	*	*		*	151	22
			5315-234-1864	MS24665-302	<96906>	...PIN,COTTER..... ---*---		HD		3	*	*	*		*	151	23
			5330-853-6655	MS29561-243	<96906>	...PACKING,PREFORMED.....		EA		1	16	40	80	960	*	151	24
P	F		1560-307-3644	S1635-63313	<78286>	...COUPLING,INPUT..... TRANSMISSION		EA		1	*	*	2		*	151	25
P	F		1560-308-3534	S1635-63352	<78286>	..WEDGE,TAIL ROTOR DRIVE..... SHAFT		EA		4	REF	REF	REF		REF	151	26
P	F		1560-307-3651	S1635-63351	<78286>	..BUSHING,SLEEVE.....		EA		2	REF	REF	REF		REF	151	27
			1560-307-3645	S1635-63314	<78286>	..GUIDE SHAFT,TRANSMISSION... RPL-BY 1560-589-8443		EA			*	*	*			151	
P	F		1560-589-8443	S1635-63333	<78286>	..GUIDE SHAFT,TAIL ROTOR..... RPLS-- 1560-307-3645		EA		1	*	2	2		*	151	28
			1560-589-8443	61-31	<13027>	ADDED PART NO.FOR ABOVE ITEM.		EA			*	REF	REF			151	28
AF	F			S1635-61204-1	<78286>	..BEARING ASSEMBLY,TAIL ROTOR		EA		4						151	29
AF	F			S1635-61204-1	<78286>	..BEARING ASSEMBLY,TAIL ROTOR		EA		3						151	

(1) SOURCE, MAINT AND REC CODE (a) SOURCE CODE	(b) MAINT LEVEL	(c) RECOV CODE	(2) FEDERAL STOCK NUMBER	REFERENCE NUMBER		(3) DESCRIPTION	MODELS USABLE ON CH-34C	(4) UNIT OF ISSUE	(5) QTY INC IN UNIT PACK	(6) QTY INC IN UNIT	(7) 30-DAY DS/GS MAINT ALW (a) 1-20	(b) 21-50	(c) 51-100	(8) 1-YR ALW PER 100 EQUIP CNTGCY	(9) DEPOT MAINT ALW PER 100 EQUIP	(10) ILLUSTRATION (a) FIG NO	(b) ITEM NO
			3110-626-9521	SB1114-2	<78286>	...BEARING,BALL,ANNULAR..... RPL-BY 3110-992-1065				1						151	
P	F	.	3110-992-1065	SB1114-4	<78286>	...BEARING,BALL ANNULAR..... RPLS-- 3110-626-9521 ATTACHING PARTS		EA		1	*	*	*		*	151	30
P	F		5340-664-1756	S1635-61210	<78286>	...RING,RETAINING..... ---*---		EA		2	*	*	*		REF	151	31
P	F		1560-346-1160	S1635-61206-2	<78286>	...HOUSING ASSEMBLY,SUPPORT.. BEAM RPLS-- 1560-310-1416		EA		1	REF	REF	REF		REF	151	32
X1				S1635-61209	<78286>	...BUSHING,SLEEVE.....		EA		1						151	33
			1680-773-6265	S1640-63000	<78286>	AFT DIRECTIONAL AND TAIL..... WHEEL LOCK CONTROLS INSTALLATION SEE FIG.150 FOR NHA		EA			*	*	*			152	
				S1625-63800-1	<78286>	.CONTROLS INSTALLATION-AFT... WHEEL LOCK				1						152	
			5340-067-9871	MS21251B3S	<96906 >	..TURNBUCKLE,BODY.....		EA		1					*	152	1
			5315-597-1562	NAS427K9	<80205>	..PIN,SPRING.....		EA		1	*	*	*		*	152	2
			5315-597-1562	NAS427K9	<80205>	..PIN,SPRING.....		EA		4	*	*	*		*	152	3
			5315-597-1562	NAS427K9	<80205>	..PIN,SPRING.....		EA		1	*	*	*		*	152	4
			5315-812-3757	MS20392-1C21	<96906>	..PIN,STRAIGHT,HEADED.....		EA		1	*	*	*		*	152	5
			5310-550-5009	MS15795-704	<96906>	..WASHER,FLAT.....		HD		1					*	152	
			5315-234-1856	MS24665-155	<96906>	..PIN,COTTER.....		HD		1	*	*	*		*	152	
			4010-563-9889	S1625-61809-2	<78286>	..CABLE ASSEMBLY RPL-BY..... 4010-631-3817										152	
P	O		4010-631-3817	NAS302-36-1152	<80205>	..WIRE ROPE RPLS--..... 4010-563-9889 ATTACHING PARTS		EA		1	*	*	*		*	152	6
			5315-990-1338	MS20392-2C19	<96906>	..PIN,STRAIGHT,HEADED.....		EA		1	*	*	*		*	152	7
			5310-183-4406	AN960PD10	<88044>	..WASHER,FLAT.....		HD		1	*	*	*		*	152	
			5315-234-1856	MS24665-155	<96906>	..PIN,COTTER..... ---*---		HD		1	*	*	*		*	152	
P	O		5315-633-6991	S1625-50557	<78286>	..PIN,STRAIGHT,HEADLESS.....		EA		1	9	23	47		*	152	8
P	O		1560-575-2062	S1625-50550	<78286>	..LINK,TAILWHEEL..... ATTACHING PARTS		EA		1	*	2	2		*	152	9
			5315-989-7631	MS20392-2C7	<96906>	..PIN,STRAIGHT,HEADED.....		EA		1	*	*	*		*	152	10
			5310-183-4406	AN960PD10	<88044>	..WASHER,FLAT.....		HD		1	*	*	*		*	152	
			5315-234-1856	MS24665-155	<96906>	..PIN,COTTER..... ---*---		HD		1	*	*	*		*	152	
			3020-288-3411	MS20219A2	<96906>	..PULLEY,GROOVE..... ATTACHING PARTS		EA		1	*	*	*		*	152	11
			5306-182-1961	AN4H13A	<88044>	..BOLT,MACHINE.....		HD		1	*	*	*		*	152	12
			5310-187-2354	AN960PD416	<88044>	..WASHER,FLAT.....		HD		1	*	*	*		*	152	
			5310-877-5796	MS21044N4	<96906>	..NUT,SELF-LOCKING,HEXAGON...		EA		1	*	*	*		*	152	

(1) SOURCE, MAINT AND REC CODE (a) SOURCE CODE	(b) MAINT CODE	(c) REC CODE	(2) FEDERAL STOCK NUMBER	REFERENCE NUMBER	(3) DESCRIPTION	MODELS USABLE ON CH-34C	(4) UNIT OF ISSUE	(5) QTY INC IN UNIT PACK	(6) QTY INC IN UNIT	(7) 30-DAY DS GS MAINT ALW (a) 1-20	(b) 21-50	(c) 51-100	(8) 1-YR ALW PER 100 EQUIP CNTGCY	(9) DEPOT MAINT ALW PER 100 EQUIP	(10) ILLUSTRATION (a) FIG NO	(b) ITEM NO
					CONTINUED										152	
					---*---											
			3120-662-6989	NAS77-4-19 <80205>	..BUSHING,SLEEVE.....		EA		1	*	*	*		*	152	13
P	O		1560-575-2061	S1625-50549 <78286>	..INDICATOR ASSEMBLY.....		EA		1	2	2	4		*	152	14
			1560-575-2061	3132 <13804>	ADDED PART NO.FOR ABOVE ITEM.		EA			REF	REF	REF			152	14
				S1640-63500 <78286>	.FORWARD DIRECTIONAL CONTROLS INSTALLATION				1						152	
P	F		1560-534-2156	S1640-61694-1 <78286>	..FAIRLEAD,DIRECTIONAL..... CONTROL CABLE ATTACHING PARTS		EA		2	*	REF	REF		REF	152	15
			5305-656-0283	AN525D832R18 <88044>	..SCREW,MACHINE.....		EA		2	*	*	*		*	152	16
			5310-184-8966	AN960PD8 <88044>	..WASHER,FLAT.....		HD		4	*	*	*		*	152	
			5310-060-2039	MS21044D08 <96906>	..NUT,SELF-LOCKING,HEXAGON...		EA		2	*	*	*		*	152	
					---*---											
			5315-597-1520	NAS427K13 <80205>	..PIN,SPRING.....		EA		2	*	*	*		*	152	17
P	F		1560-922-8287	S1640-61684-1 <78286>	..SUPPORT CHANNEL-LH..... ATTACHING PARTS		EA		1	*	*	*		*	152	18
			5305-844-3572	AN525D832R8 <88044>	..SCREW,MACHINE.....		EA		3	*	*	*		*	152	19
			5310-184-8966	AN960PD8 <88044>	..WASHER,FLAT.....		HD		6	*	*	*		*	152	
			5310-060-2039	MS21044D08 <96906>	..NUT,SELF-LOCKING,HEXAGON...		EA		3	*	*	*		*	152	
					---*---											
MF	F			S1640-61694-2 <78286>	..FAIRLEAD-LH..... MAKEFR		EA		2						152	20
					AR 9330-202-3806 AL ALLY SH ATTACHING PARTS											
			5305-292-5923	AN525D832R12 <88044>	..SCREW,MACHINE.....		EA		1	*	*	*		*	152	21
			5310-184-8966	AN960PD8 <88044>	..WASHER,FLAT.....		HD		2	*	*	*		*	152	
			5310-060-2039	MS21044D08 <96906>	..NUT,SELF-LOCKING,HEXAGON...		EA		1	*	*	*		*	152	
					---*---											
MF	F			S1640-61694-2 <78286>	..FAIRLEAD-LH..... MAKEFR		EA		2						152	22
					AR 9330-202-3806 AL ALLY SH ATTACHING PARTS											
			5305-292-5923	AN525D832R12 <88044>	..SCREW,MACHINE.....		EA		1	*	*	*		*	152	23
			5310-184-8966	AN960PD8 <88044>	..WASHER,FLAT.....		HD		2	*	*	*		*	152	
			5310-060-2039	MS21044D08 <96906>	..NUT,SELF-LOCKING,HEXAGON...		EA		1	*	*	*		*	152	
					---*---											
			5315-597-1520	NAS427K13 <80205>	..PIN,SPRING.....		EA		2	*	*	*		*	152	24
P	F		1560-560-5401	S1640-63508-5 <78286>	..CABLE ASSEMBLY,DIRECTIONAL. FLIGHT CONTROLS		EA		1	*	*	*		*	152	25
				S1640-63520 <78286>	..CYLINDER INSTALLATION.....				1						152	
				NAS649-32L <80205>	...TURNBUCKLE.....		EA		2						152	
			5340-010-3090	MS21256-2 <96906>	...CLIP.....		EA		AR	*	*	*			152	27
P	F		1560-524-8386	S1640-63521-1 <78286>	...CYLINDER ASSEMBLY.....		EA		1	*	*	2		*	152	28
			5340-257-0210	AN996-20 <88044>	....RING,LOCKING.....		EA		1	*	*	*		*	152	29
X1				S1640-63523 <78286>	....CAP,FLIGHT CONTROLS..... SPRING CYLINDER WHEN EXHTD RQTN NHA 1560-524-8386		EA		1						152	30
X1				S1640-63522 <78286>	....PISTON,FLIGHT CONTROLS... DIRECTIONAL WHEN EXHTD RQTN NHA 1560-524-8386		EA		1						152	31

(1) SOURCE, MAINT AND REC CODE (a) SOURCE CODE	(b) MAINT LEVEL	(c) REC CODE	(2) FEDERAL STOCK NUMBER	REFERENCE NUMBER	(3) DESCRIPTION	MODELS USABLE ON CH-34C	(4) UNIT OF ISSUE	(5) QTY INC IN UNIT PACK	(6) QTY INC IN UNIT	(7) 30-DAY DS GS MAINT ALW (a) 1-20	(b) 21-50	(c) 51-100	(8) 1-YR ALW PER 100 EQUIP CNTGCY	(9) DEPOT MAINT ALW PER 100 EQUIP	(10) ILLUSTRATION (a) FIG NO	(b) ITEM NO
P	F		1560-589-4306	S1640-63527	<78286> ....SPRING,HELICAL..... COMPRESSION		EA		1	*	*	*		*	152	32
P	F		1560-589-4307	S1640-63528	<78286> ....SPRING,HELICAL..... COMPRESSION		EA		1	*	*	*		*	152	33
X1				S1640-63524	<78286> ....BARREL,FLIGHT CONTROLS... WHEN EXHTD RQTN NHA 1560-524-8386		EA		1						152	33A
			5340-548-7703	EAB720026	<81996> ...CLAMP,SUPPORT..... ATTACHING PARTS		EA		4	*	*	*		*	152	34
			5306-182-2060	AN3H7A	<88044> ...BOLT,MACHINE.....		HD		1	*	*	*		*	152	35
			5310-167-0753	AN960PD10L	<88044> ...WASHER,FLAT.....		HD		2	*	*	*		*	152	
			5310-183-4406	AN960PD10	<88044> ...WASHER,FLAT.....		HD		AR	*	*	*		*	152	
			5310-877-5797	MS21044N3	<96906> ...NUT,SELF-LOCKING,HEXAGON..		EA		1	*	*	*		*	152	
					---*---											
P	F		1560-586-6778	S1640-63525	<78286> ...GUARD,FLIGHT CONTROLS.....		EA		1	*	*	*		*	152	36
				S1640-63501	<78286> ..QUADRANT INSTALLATION SEE. FIG.153 FOR BREAKDOWN ATTACHING PARTS				1						152	37
			5306-206-6370	NAS464-4-18	<80205> ..BOLT,SHEAR.....		EA		1	*	*	*		*	152	38
			5310-187-2354	AN960PD416	<88044> ..WASHER,FLAT.....		HD		2	*	*	*		*	152	
			5310-176-8108	AN320-4	<88044> ..NUT,SLOTTED,HEXAGON.....		HD		1	*	*	*		*	152	
			5315-234-1856	MS24665-155	<96906> ..PIN,COTTER.....		HD		1	*	*	*		*	152	
					---*---											
				S1640-63501	<78286> QUADRANT INSTALLATION SEE... FIG.152 FOR NHA										153	
			5315-812-3757	MS20392-1C21	<96906> .PIN,STRAIGHT,HEADED.....		EA		4	*	*	*		*	153	1
			5310-550-5009	MS15795-704	<96906> .WASHER,FLAT.....		HD		4					*	153	
			5315-234-1856	MS24665-155	<96906> .PIN,COTTER.....		HD		4	*	*	*		*	153	
			1560-334-6401	S1640-63508-1	<78286> .CABLE ASSEMBLY RPL-BY..... 4010-631-3789		EA			*	*	*			153	
P	F		4010-631-3789	NAS305-27-1446	<80205> .WIRE ROPE ASSEMBLY RPLS--.. 1560-334-6401		EA		1	*	*	*		*	153	2
P	F		1560-560-9147	S1640-63508-6	<78286> .CABLE ASSEMBLY-RH..... ATTACHING PARTS		EA		1	*	*	*		*	153	
			5306-292-8252	AN4H7A	<88044> .BOLT,MACHINE.....		HD		1	*	*	*		*	153	3
			5310-141-1795	AN960-416	<88044> .WASHER,FLAT.....		HD		1	*	*	*		*	153	
			5310-877-5796	MS21044N4	<96906> .NUT,SELF-LOCKING,HEXAGON....		EA		1	*	*	*		*	153	
					---*---											
			1560-336-7958	S1640-64009-3	<78286> .ROD ASSEMBLY RPL-BY..... 1560-328-4840		EA			*	*	*			153	
P	F		1560-328-4840	S1640-61157-6	<78286> .ROD ASSEMBLY,FLIGHT..... CONTROLS RPLS-- 1560-336-7958 ATTACHING PARTS		EA		1	*	*	2		*	153	4
			5306-206-6370	NAS464-4-18	<80205> .BOLT,SHEAR.....		EA		1	*	*	*		*	153	5
			5310-187-2354	AN960PD416	<88044> .WASHER,FLAT.....		HD		2	*	*	*		*	153	

(1) SOURCE, MAINT AND REC CODE (a) SOURCE CODE	(b) MAINT LEVEL	(c) REC CODE	(2) FEDERAL STOCK NUMBER	REFERENCE NUMBER		(3) DESCRIPTION	MODELS USABLE ON CH-34C	(4) UNIT OF ISSUE	(5) QTY INC IN UNIT PACK	(6) QTY INC IN UNIT	(7) 30-DAY DS GS MAINT ALW (a) 1-20	(b) 21-50	(c) 51-100	(8) 1-YR ALW PER 100 EQUIP CNTGCY	(9) DEPOT MAINT ALW PER 100 EQUIP	(10) ILLUSTRATION (a) FIG NO	(b) ITEM NO
			5310-176-8108	AN320-4	<88044>	.NUT,SLOTTED,HEXAGON.....		HD		1	*	*	*		*	153	
			5315-234-1856	MS24665-155	<96906>	.PIN,COTTER.....		HD		1	*	*	*		*	153	
			5306-550-2138	NAS464P4A23	<80205>	.BOLT,SHEAR.....		EA		1	*	*	*			153	6
			5310-187-2354	AN960PD416	<88044>	.WASHER,FLAT.....		HD		2	*	*	*		*	153	
			5310-543-4443	MS20364-428A	<96906>	.NUT,SELF-LOCKING,HEXAGON....		HD		1	*	*	*		*	153	
						---*---											
X1				S1640-61311-2	<78286>	..ROD END ASSEMBLY RPLS--... 1560-554-1072 ATTACHING PARTS		EA		2						153	7
				AN470AD5	<88044>	..RIVET,SOLID.....		EA		2						153	
						---*---											
			1560-334-6400	S1640-63506	<78286>	.BELL CRANK ASSEMBLY..... RPL-BY 1560-624-1878		EA			*	*	*			153	
P	F		1560-624-1878	S1640-63506-2	<78286>	.BELL CRANK ASSEMBLY..... RPLS-- 1560-334-6400, 1560-601-0297 ATTACHING PARTS		EA		1	*	2	2		*	153	9
			5306-206-6380	NAS464-5-33	<80205>	.BOLT,SHEAR.....		EA		1	*	*	*		*	153	10
			5310-187-2399	AN960PD516	<88044>	.WASHER,FLAT.....		HD		2	*	*	*		*	153	
			5310-176-8109	AN320-5	<88044>	.NUT,SLOTTED,HEXAGON.....		HD		1	*	*	*		*	153	
			5315-234-1856	MS24665-155	<96906>	.PIN,COTTER.....		HD		1	*	*	*		*	153	
						---*---											
P	F		3110-158-6298	DW5	<21335>	..BEARING,BALL,AIRFRAME.....		EA		1	*	REF	REF		REF	153	12
P	F		1560-606-7524	S1640-63510-5	<78286>	.QUADRANT ASSEMBLY RPLS--... 1560-305-4193 & 1560-334-6399 ATTACHING PARTS		EA		1	*	*	2		*	153	13
			5306-207-0995	NAS464-4-59	<80205>	.BOLT,SHEAR.....		EA		1	*	*	*		*	153	14
			5310-187-2354	AN960PD416	<88044>	.WASHER,FLAT.....		HD		1	*	*	*		*	153	
			5310-176-8108	AN320-4	<88044>	.NUT,SLOTTED,HEXAGON.....		HD		1	*	*	*		*	153	
			5315-234-1856	MS24665-155	<96906>	.PIN,COTTER.....		HD		1	*	*	*		*	153	
						---*---											
P	F		3110-142-4461	AN200KP4	<88044>	..BEARING,BALL,AIRFRAME.....		EA		2	*	*	*		REF	153	15
P	F		1560-563-9769	SS4055-4-165	<78286>	..SPACER,ASSEMBLY.....		EA		1	*	*	*		*	153	16
P	F		1560-606-7525	S1640-63513-1	<78286>	.SUPPORT ASSEMBLY,FLIGHT..... RPLS-- 1560-334-6403, 1560-340-1141		EA		1	*	*	*		*	153	17
MF	F			S1640-63514-1	<78286>	..TAB,RIGGING PIN..... MAKEFR AR 9535-167-2280 AL ALLY SH ATTACHING PARTS		EA		1						153	18
			5305-286-1772	AN525-832R14	<88044>	..SCREW,MACHINE.....		EA		1	*	*	*		*	153	19
			5310-184-8966	AN960PD8	<88044>	..WASHER,FLAT.....		HD		2	*	*	*		*	153	
			5310-811-3494	MS21044N08	<96906>	..NUT,SELF-LOCKING,HEXAGON...		EA		1	*	*	*		*	153	
						---*---											
X2	F		5340-828-8079	S1640-63514-2	<78286>	..SPACER,DIRECTIONAL CONTROLS		EA		1	*	*	*		*	153	20
				NAS538-4P42	<80205>	..BUSHING,SLEEVE.....		EA		1						153	
P	F		5310-768-3862	SS4400-1	<78286>	..WASHER.....		EA		1	*	*	*		*	153	22
P	F		3120-528-6624	SS4006-5-56	<78286>	..BUSHING,SLEEVE.....		EA		2	*	*	*		*	153	23
				SS4400-2	<78286>	..WASHER.....		EA		1						153	
			5306-282-2680	AN4H50A	<88044>	..BOLT,MACHINE.....		EA		2	*	*	*		*	153	25
			5310-184-9001	AN960PD416L	<88044>	..WASHER,FLAT.....		HD		4	*	*	*		*	153	

(1) SOURCE, MAINT AND REC CODE (a) SOURCE CODE	(b) MAINT LEVEL	(c) REC CODE	(2) FEDERAL STOCK NUMBER	REFERENCE NUMBER	(3) DESCRIPTION	MODELS USABLE ON CH-34C	(4) UNIT OF ISSUE	(5) QTY INC IN UNIT PACK	(6 QTY INC IN UNIT	(7) 30-DAY DS/GS MAINT ALW (a) 1-20	(b) 21-50	(c) 51-100	(8) 1-YR ALW PER 100 EQUIP CNTGCY	(9) DEPOT MAINT ALW PER 100 EQUIP	(10) ILLUSTRATION (a) FIG NO	(b) ITEM NO
			5310-877-5796	MS21044N4 <96906>	..NUT,SELF-LOCKING,HEXAGON...		EA		2	*	*	*		*	153	
				S1640-63512-3 <78286>	..SUPPORT,DIRECTIONAL..... CONTROLS		EA		1						153	
MF	F	.		S1640-63509 <78286>	.GUARD,FLIGHT CONTROL..... MAKEFR Ar 9330-576-3984 PLASTIC SH ATTACHING PARTS		EA		2						153	27
			5305-272-4949	AN526-832R9 <88044>	.SCREW,MACHINE.....		GR		2	*	*	*		*	153	28
			5310-184-8966	AN960PD8 <88044>	.WASHER,FLAT.....		HD		4	*	*	*		*	153	
			5310-811-3494	MS21044N08 <96906>	.NUT,SELF-LOCKING,HEXAGON.... ---*---		EA		2	*	*	*		*	153	

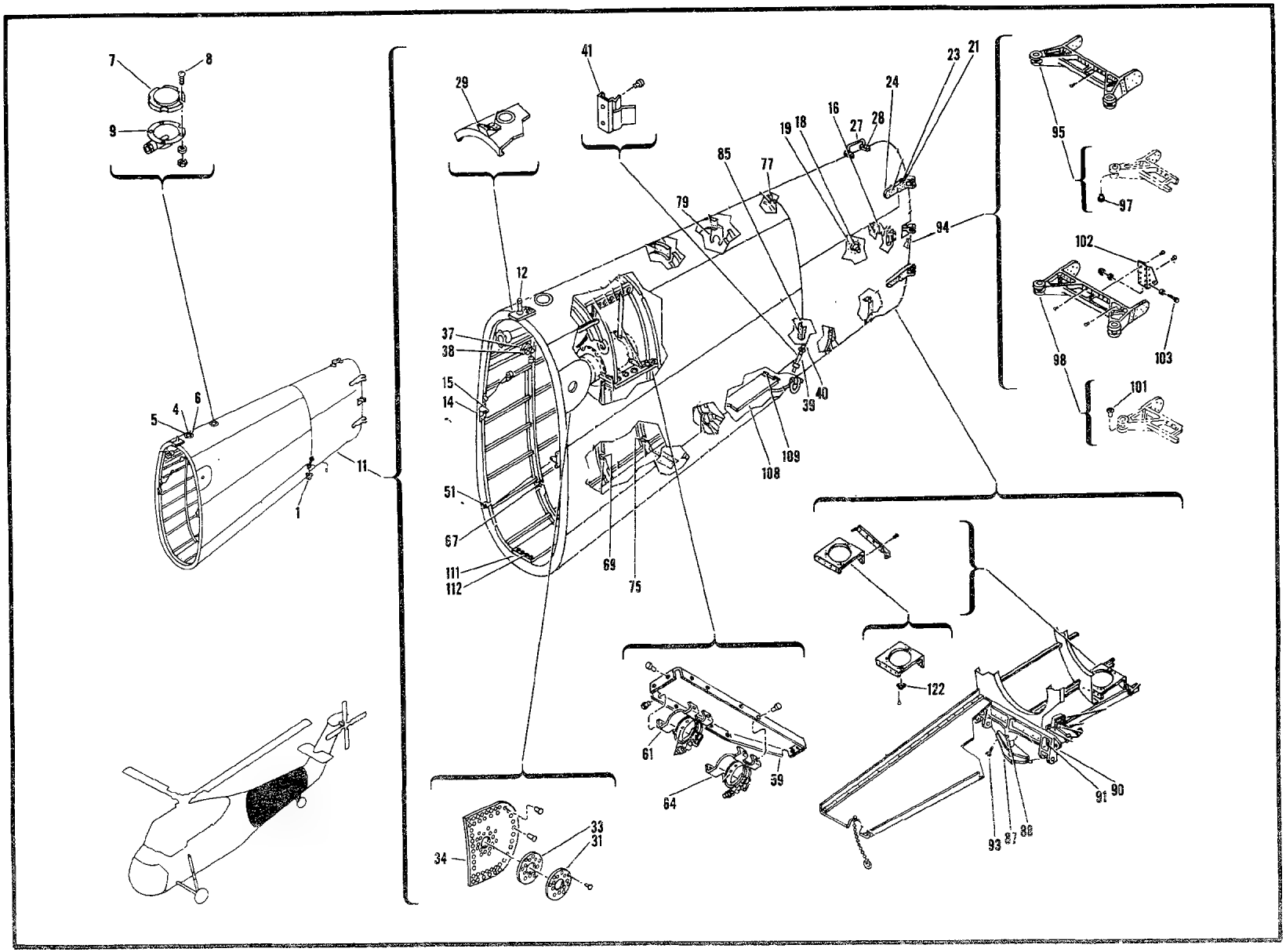

Figure 150. Aft Section Tail Cone Equipment

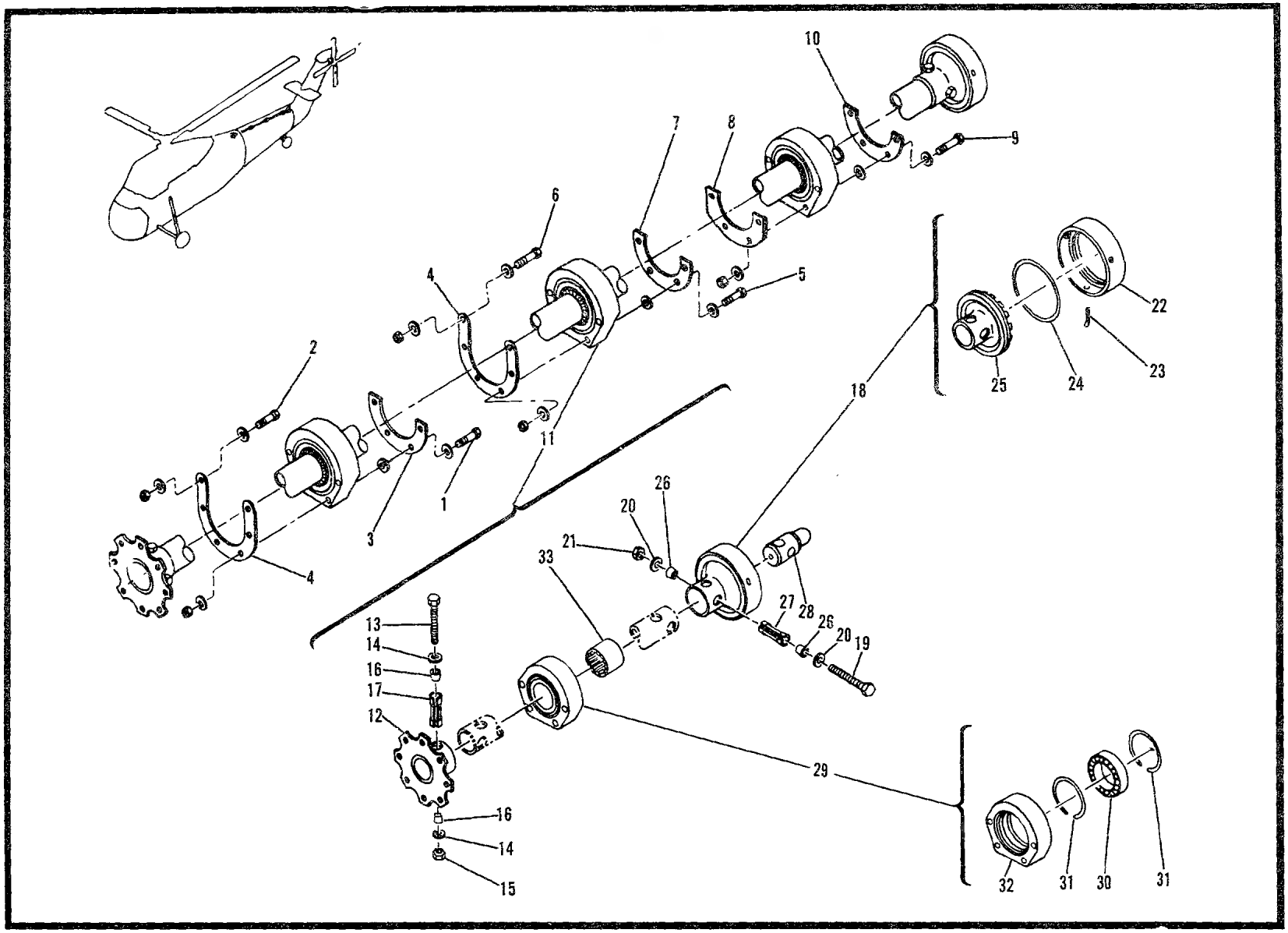

Figure 151. Aft Transmission Installation

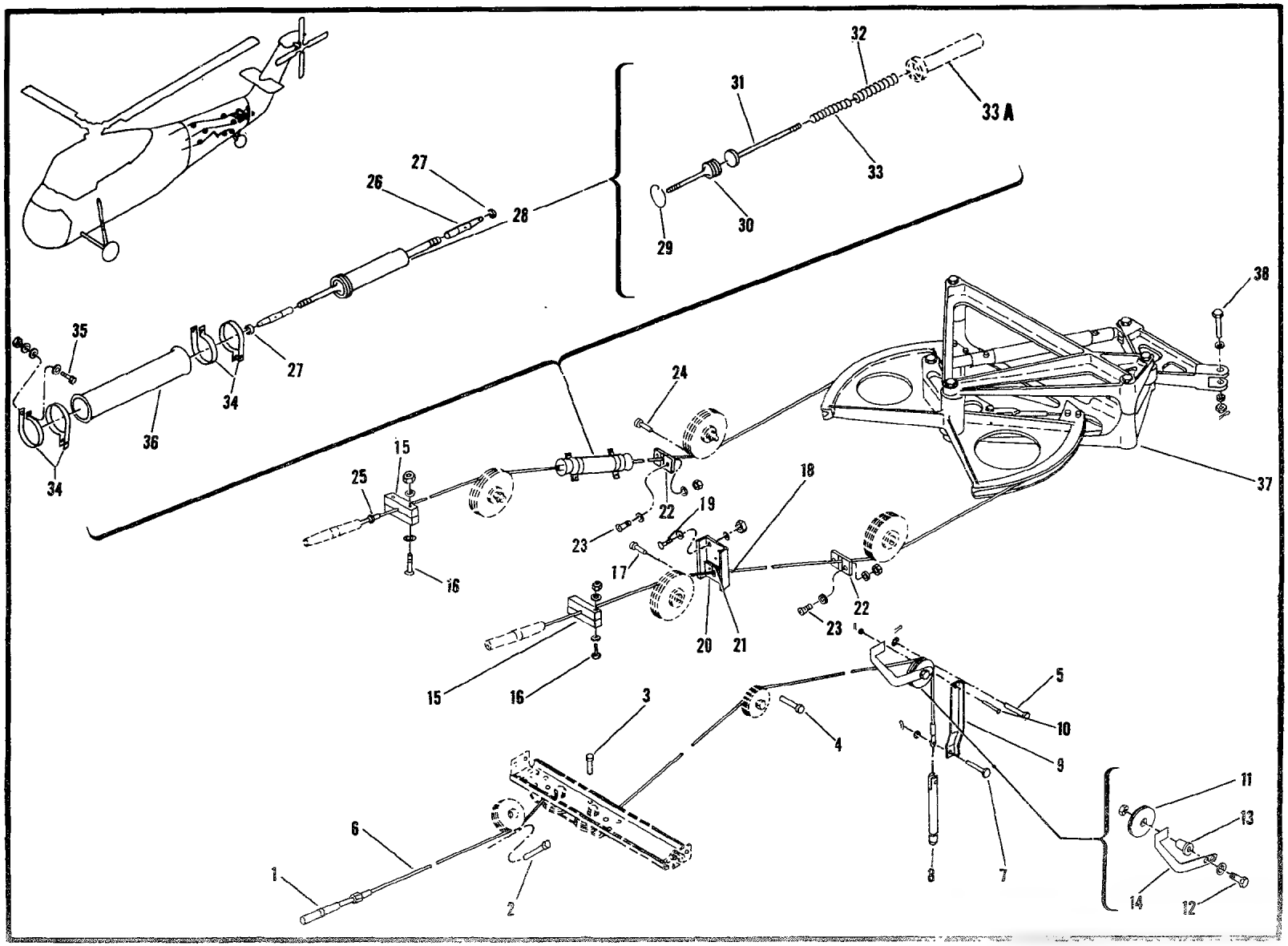

Figure 152. Aft Directional and Tail Wheel Lock Controls Installation.

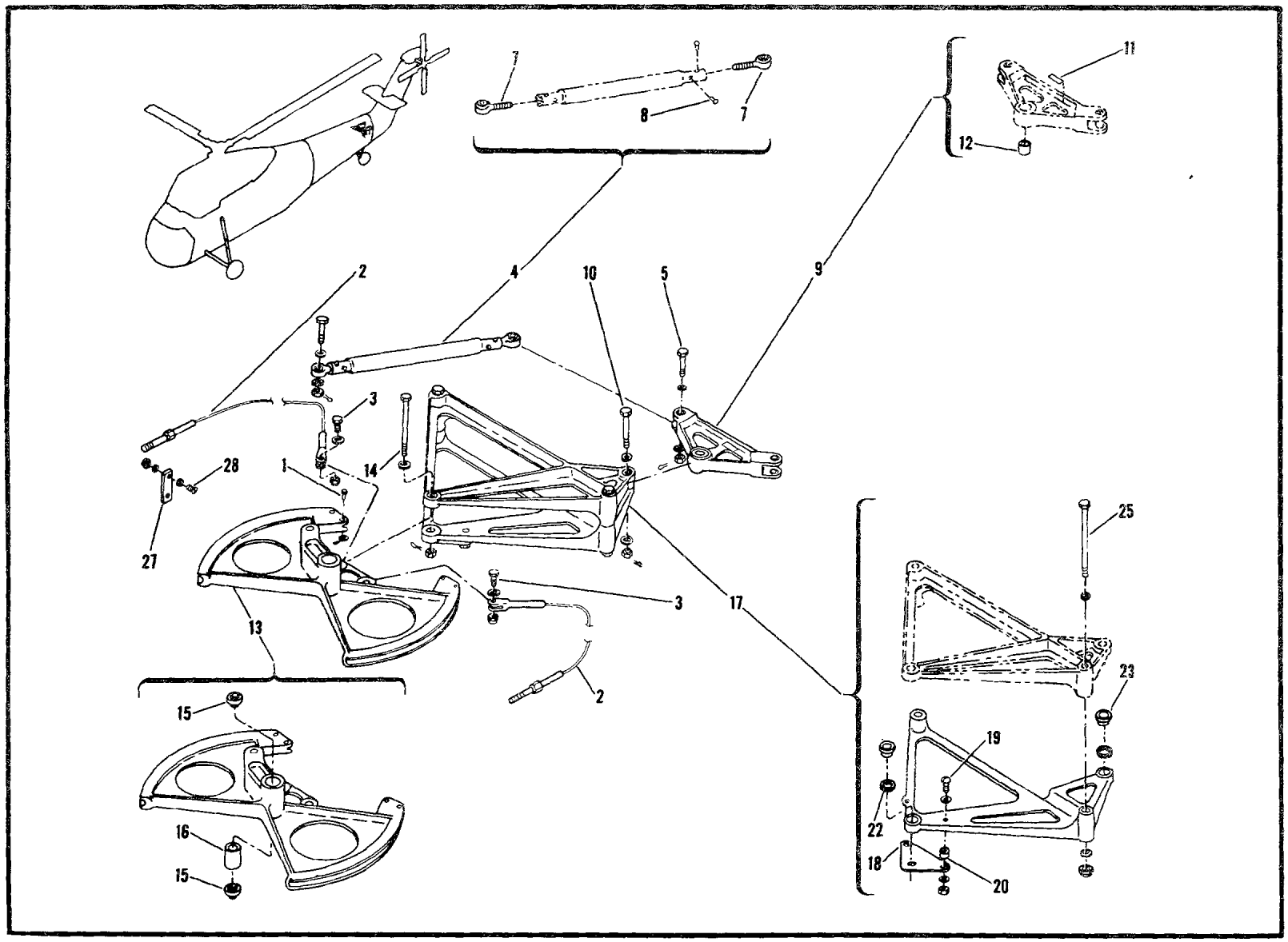

Figure 153. Quadrant Installation

(1) SOURCE, MAINT AND REC CODE (a) SOURCE CODE	(b) MAINT LEVEL	(c) RLC CODE	(2) FEDERAL STOCK NUMBER	REFERENCE NUMBER		(3) DESCRIPTION	MODELS USABLE ON	(4) UNIT OF MEAS	(5) QTY INC IN UNIT PACK	(6) QTY INC IN UNIT	(7) 30-DAY DS GS MAINT ALW (a) 1-20	(b) 21-50	(c) 51-100	(8) 1-YR ALW PER 100 EQUIP CNTGCY	(9) DEPOT MAINT ALW PER 100 EQUIP	(10) ILLUSTRATION (a) FIG NO	(b) ITEM NO
				S1620-64000-6	<78286>	PYLON AND EQUIPMENT SEE..... FIG.39 FOR NHA										154	
				S1635-64300-4	<78286>	.PYLON TRANSMISSION..... INSTALLATION SEE FIG.155 FOR BREAKDOWN				1						154	1
				S1640-64000	<78286>	.PYLON DIRECTIONAL CONTROLS.. INSTALLATION SEE FIG.159 FOR BREAKDOWN				1						154	2
				S1655-64000-4	<78286>	.WIRING INSTALLATION-PYLON... ELECTRICAL				1						154	
				S1655-64010-2	<78286>	..LIGHT AND SUPPORT..... INSTALLATION-POSITION				1						154	
				S1655-64010-3	<78286>	...LIGHT AND SUPPORT ASSEMBLY ATTACHING PARTS		EA		1						154	3
			5305-281-8527	AN525-832R8	<88044>	...SCREW,MACHINE.....		HD		7	*	*	*		*	154	4
			5310-184-8966	AN960PD8	<88044>	...WASHER,FLAT.....		HD		7	*	*	*		*	154	
						---*---											
P	F		6220-548-0313	MS25219-1	<96906>	....LIGHT,NAVIGATIONAL,..... AIRCRAFT RPLS-- 6220-688-5053 ATTACHING PARTS		EA		1	*	*	*		REF	154	5
			5305-889-2999	MS35206-217	<96906>	....SCREW,MACHINE.....		HD		2					*	154	6
						---*---											
P	C		6220-557-8861	MS23006-3	<96906>	....LENS,AIRCRAFT,..... NAVIGATIONAL LIGHT		EA		1	6	16	31		*	154	
			6240-155-7784	MS25232-307	<96906>	....LAMP,INCANDESCENT.....		EA		1	*	*	*		*	154	8
P	D		6240-592-1006	MS24513-4174	<96906>	....LAMP,INCANDESCENT.....		EA		AR	*	*	*			154	
P	F		1560-560-9149	S1655-64011	<78286>	....SUPPORT,PYLON POSITION,.. LIGHT		EA		1	*	*	*		*	154	9
				S1655-64212	<78286>	..LIGHT INSTALLATION..... ROTATING BEACON				1						154	
			6220-475-0217	WRM24	<10402>	...LIGHT,NAVIGATIONAL RPL-BY 6220-963-9359										154	
			6220-500-0736	G7740-24	<72914>	...LIGHT,NAVIGATIONAL RPL-BY 6220-963-9359										154	

SECTION II

FUNCTIONAL GROUP 07

PYLON AND EQUIPMENT

(1) SOURCE, MAINT AND REC CODE (a) SOURCE CODE	(b) MAINT LEVEL	(c) REC CODE	(2) FEDERAL STOCK NUMBER	REFERENCE NUMBER		(3) DESCRIPTION	MODELS USABLE ON CH-34C	(4) UNIT OF ISSUE	(5) QTY INC IN UNIT PACK	(6) QTY INC IN UNIT	(7) 30-DAY DS GS MAINT ALW (a) 1-20	(b) 21-50	(c) 51-100	(8) 1-YR ALW PER 100 EQUIP CNTGCY	(9) DEPOT MAINT ALW PER 100 EQUIP	(10) ILLUSTRATION (a) FIG NO	(b) ITEM NO
			6220-500-1877	G7740-8-24	<72914>	...LIGHT,NAVIGATIONAL RPL-BY 6220-963-9359										154	
			6220-627-0370	7740-24	<72914>	...LIGHT,NAVIGATIONAL RPL-BY 6220-963-9359										154	
			6220-691-1189	G8400A8-24	<72914>	...LIGHT,NAVIGATIONAL RPL-BY 6220-963-9359										154	
			6220-711-1959	G7740A24	<72914>	...LIGHT,NAVIGATIONAL RPL-BY 6220-963-9359										154	
			6220-783-6178	G8400-8-24	<72914>	...LIGHT,NAVIGATIONAL RPL-BY 6220-963-9359										154	
			6220-783-6855	WB24	<10402>	...LIGHT,NAVIGATIONAL RPL-BY 6220-963-9359										154	
			6220-803-4610	G8400A24-24	<72914>	...LIGHT,NAVIGATIONAL RPL-BY 6220-963-9359										154	
			6220-882-1647	PD214A	<81996>	...LIGHT,NAVIGATIONAL RPL-BY 6220-963-9359										154	
P	O		6220-963-9359	MILL58085	<81349>	...LIGHT,NAVIGATIONAL RPLS-- 6220-475-0217, 6220-500-0736, 6220-500-1877, 6220-627-0370, 6220-691-1189, 6220-711-1959, 6220-783-6178, 6220-783-6855, 6220-803-4610,& 6220-882-1647 ATTACHING PARTS		EA		1	2	4	7	86	*	154	10
			5305-282-2712	AN502-6-8	<88044>	...SCREW,MACHINE.....		HD		3	*	*	*		*	154	11
			5310-188-7721	AN960PD6	<88044>	...WASHER,FLAT..... ---*---		HD		3	*	*	*		*	154	
P	O		6240-225-5128	WRM45K	<10402>	....LAMP,INCANDESCENT..... RPLS-- 6240-856-0196 U/O 6220-086-6844, 6220-475-0217		EA		1						154	11A
P	O		6220-064-6300	WRM10	<10402>	....DOME.....		EA		1	*	*	*		*	154	11B
P	O		6220-064-6299	WRM25	<10402>	....CLAMP.....		EA		1	*	*	*		*	154	11C
P	O		6220-064-6298	WRM30	<10402>	....GASKET.....		EA		1	*	*	*		*	154	11D
			6240-564-1084	MS25338-7079	<96906>	....LAMP,INCANDESCENT..... 6220-711-1960, 6220-803-4610		EA		AR	2	5	9		*	154	
			6240-564-1084	A7079-24	<72914>	ADDED PART NO FOR ABOVE ITEM.		EA			REF	REF	REF			154	
P	O		6240-141-6143	1939	<08804>	....LAMP U/O 6220-066-0297..		EA		1	*	*	*		*	154	
P	O		6220-572-3788	A7942	<72914>	....LENS AND PLUG ASSEMBLY,.. NAVIGATION U/O 6620-963-9359 ATTACHING PARTS		EA		1	*	*	*		*	154	
P	O		6220-572-3787	A7632	<72914>	....GASKET U/O 6620-963-9359		EA		1	*	*	*		*	154	
P	O		5340-790-5203	A7635A	<72914>	....CLAMP,LOOP U/O..... 6620-963-9359		EA		1	*	*	*		*	154	
P	O		5305-679-6192	A7634	<72914>	....SCREW U/O 6620-963-9359. ---*---		EA		1	*	*	*		*	154	

(1) SOURCE, MAINT AND REC CODE (a) SOURCE CODE	(b) MAINT CATEGORY	(c) RECOVERY CODE	(2) FEDERAL STOCK NUMBER	REFERENCE NUMBER	(3) DESCRIPTION	MODELS USABLE ON CH-34C	(4) UNIT OF ISSUE	(5) QTY INC IN UNIT PACK	(6) QTY INC IN UNIT	(7) 30-DAY DS/GS MAINT ALW (a) 1-20	(b) 21-50	(c) 51-100	(8) 1-YR ALW PER 100 EQUIP CNTGCY	(9) DEPOT MAINT ALW PER 100 EQUIP	(10) ILLUSTRATION (a) FIG NO	(b) ITEM NO
				18	<88708> ..OKOCORD.....		EA		1						154	12
		R	1560-336-0770	S1620-64100-1	<78286> .PYLON ASSEMBLY RPL-BY..... 1560-856-0197										154	
		R	1560-489-2811	S1620-64100	<78286> .PYLON ASSEMBLY RPL-BY..... 1560-856-0197										154	
		R	1560-591-0531	S1620-64100-2	<78286> .PYLON ASSEMBLY RPL-BY..... 1560-856-0197										154	
		R	1560-591-6661	S1620-64100-11	<78286> .PYLON ASSEMBLY RPL-BY..... 1560-856-0197										154	
		R	1560-626-1976	S1620-64100-15	<78286> .PYLON ASSEMBLY RPL-BY..... 1560-856-0197										154	
X2			1560-630-0932	S1620-64124-9	<78286> ..TRAILING EDGE ASSEMBLY.....		EA		1	*	*	*		*	154	
		R	1680-775-5969	S1620-64100-14	<78286> .PYLON ASSEMBLY RPL-BY..... 1560-856-0197										154	
P	F	R	1560-856-0197	S1620-64100-19	<78286> .PYLON ASSEMBLY,TAIL ROTOR... RPLS-- 1560-336-0770, 1560-489-2811, 1560-591-0531, 1560-591-6661, 1560-626-1976,& 1680-775-5969		EA		1	*	2	2	24	*	154	13
P	F		1615-062-9520	S1620-64150-5	<78286> ..ANGLE,TAIL ROTOR PYLON.....		EA		1	*	*	*		*	154	
			1560-772-5541	S1620-64125-9	<78286> ..FAIRING INSTALLATION-GEAR.. BOX COOLING SCREEN		EA		1	*	*	*			154	
P	O		1560-326-3458	S1620-64125-1	<78286> ...FAIRING ASSEMBLY,GEAR..... BOX COOLING SCREEN		EA		1	*	2	2		*	154	
P	O		1560-563-9866	S1620-64125-3	<78286> ....FAIRING,TAIL ROTOR..... PYLON		EA		1	*	*	*		*	154	14
			1560-563-9865	S1620-64125-2	<78286> ...SCREEN ASSEMBLY,GEAR BOX.. RPL-BY 1560-991-0433										154	
P	O		1560-991-0433	S1620-64200-1	<78280> ...SCREEN,TAIL ROTOR PYLON... RPLS-- 1560-563-9865 ATTACHING PARTS		EA		1	*	2	2		*	154	
			5305-273-5342	AN525-832R12	<88044> ...SCREW,MACHINE..... ---*---		EA		2	*	*	*		*	154	15
				MS15985D8R9	<96906> ...SCREW,SELF-LOCKING,HEXAGON ---*---		EA		10						154	
				S1620-64160	<78286> ..FAIRING INSTALLATION..... STABILIZER LOWER				1						154	
P	O		1560-327-3861	S1620-64160-1	<78286> ...FAIRING ASSEMBLY,PYLON.... SECTION		EA		1	*	*	*		*	154	17
P	O		1560-327-3860	S1620-64153-1	<78286> ...FAIRING ASSEMBLY,PYLON.... SECTION ATTACHING PARTS		EA		1	*	*	2		*	154	
			5305-281-8526	AN525-832R6	<88044> ...SCREW,MACHINE.....		HD		17	*	*	*		*	154	18
			5310-184-8966	AN960PD8	<88044> ...WASHER,FLAT..... ---*---		HD		17	*	*	*		*	154	
				W11D832	<71087> ...NUT PLATE..... ATTACHING PARTS		EA		2						154	
				MS20426B3	<96906> ...RIVET..... ---*---		EA		1						154	
MF	F			S1620-64160-4	<78286> ...CLIP-LH.....NOTE 5		EA		1						154	21

(1) SOURCE, MAINT AND REC CODE (a) SOURCE CODE	(b) MAINT LEVEL	(c) RECOVERY CODE	(2) FEDERAL STOCK NUMBER	REFERENCE NUMBER		(3) DESCRIPTION	MODELS USABLE ON CH-34C	(4) UNIT OF ISSUE	(5) QTY INC IN UNIT PACK	(6) QTY INC IN UNIT	(7) 30-DAY DS/GS MAINT ALW (a) 1-20	(b) 21-50	(c) 51-100	(8) 1-YR ALW PER 100 EQUIP CNTGCY	(9) DEPOT MAINT ALW PER 100 EQUIP	(10) ILLUSTRATION (a) FIG NO	(b) ITEM NO
MF	F			S1620-64160-5	<78286>	...CLIP-RH.....NOTE 5		EA		1						154	
						ATTACHING PARTS											
				MS20470B4	<96906>	...RIVET,SOLID.....		EA		2						154	
						---*---											
				S1620-64122-1	<78286>	..PANEL INSTALLATION.....				1						154	
						INTERMEDIATE GEAR BOX											
						DOOR											
				S1620-64099-1	<78286>	...DOOR INSTALLATION.....				1						154	
P	O		1560-570-4858	S1620-64099-2	<78286>	....DOOR ASSEMBLY,ACCESS,....		EA		1	*	*	*		*	154	23
						INTERMEDIATE GEAR BOX											
						ATTACHING PARTS											
				MS20470B5	<96906>	....RIVET.....		EA		3						154	
						---*---											
				H5000C032-072	<83014>	.....LATCH.....		EA		1						154	
						ATTACHING PARTS											
				MS20470B3	<96906>	.....RIVET.....		EA		4						154	
						---*---											
P	O		1560-716-8508	S1620-64099-7	<78286>	.....DOOR,ACCESS.....		EA		1	*	*	*		*	154	29
				S1620-64099-5	<78286>	....ANGLE ASSEMBLY.....		EA		1						154	
						ATTACHING PARTS											
			5306-182-2058	AN3H5A	<88044>	....BOLT,MACHINE.....		EA		1	*	*	*		*	154	38
			5310-183-4406	AN960PD10	<88044>	....WASHER,FLAT.....		HD		2	*	*	*		*	154	
			5310-877-5797	MS21044N3	<96906>	....NUT,SELF-LOCKING,HEXAGON.		EA		1	*	*	*		*	154	
				MS20470B4	<96906>	....RIVET,SOLID.....		EA		6						154	39
						---*---											
				S1620-64122-2	<78286>	...PANEL ASSEMBLY.....		EA		1						154	45
						ATTACHING PARTS											
			5306-182-2057	AN3H4A	<88044>	...BOLT,MACHINE.....		HD		47	*	*	*		*	154	46
			5306-182-2056	AN3H3A	<88044>	...BOLT,MACHINE.....		HD		6	*	*	*		*	154	47
			5306-182-2058	AN3H5A	<88044>	...BOLT,MACHINE.....		EA		6	*	*	*		*	154	48
			5310-167-0753	AN960PD10L	<88044>	...WASHER,FLAT.....		HD		59	*	*	*		*	154	
						---*---											
				S1620-64122-12	<78286>	....FRAME-WINDOW.....		EA		1						154	49
						ATTACHING PARTS											
				MS20470AD4	<96906>	....RIVET.....		EA		12						154	50
						---*---											
P	F		1560-530-1191	S1620-64122-13	<78286>	....WINDOW,OBSERVATION.....		EA		1	*	*	*		*	154	51
				S1620-64117-9	<78286>	..FITTING INSTALLATION.....				1						154	
						RIVETED											
P	F		1560-098-8277	S1620-64151-1	<78286>	...FITTING,STABILIZER.....		EA		1	*	*	*		*	154	58
P	F		1560-098-8278	S1620-64151-2	<78286>	...FITTING,STABILIZER.....		EA		1	*	*	*		*	154	
						ATTACHMENT											
						ATTACHING PARTS											
			5320-167-4949	P6J	<29666>	...RIVET,BLIND.....		EA		10	*	*	*			154	59
				P6F	<29666>	...RIVET,BLIND.....		EA		10						154	60
						---*---											
				S1620-64117-11	<78286>	...SHIM.....		EA		2						154	61
P	H		1560-327-3859	S1620-64119	<78286>	...FITTING,PYLON SECTION.....		EA		1	*	*	*		*	154	62
						STABILIZER											
						ATTACHING PARTS											
P	H		5320-680-3598	ALPPHT6-5	<29666>	...PIN,RIVET.....		EA		4						154	63
P	H		5320-489-4823	LCC6	<29666>	...COLLAR,RIVET PIN.....		EA		4	*	*	*		REF	154	

(1) SOURCE, MAINT AND REC CODE (a) SOURCE CODE	(b) MAINT CODE	(c) REC CODE	(2) FEDERAL STOCK NUMBER	REFERENCE NUMBER	(3) DESCRIPTION	MODELS USABLE ON CH-34C	(4) UNIT OF ISSUE	(5) QTY INC IN UNIT PACK	(6) QTY INC IN UNIT	(7) 30-DAY DS GS MAINT ALW (a) 1-20	(b) 21-50	(c) 51-100	(8) 1-YR ALW PER 100 EQUIP CNTGCY	(9) DEPOT MAINT ALW PER 100 EQUIP	(10) ILLUSTRATION (a) FIG NO	(b) ITEM NO
					CONTINUED										154	
					---*---											
				S1620-64132-56	<78286> ..FAIRING INSTALLATION.....				1						154	
P	F		1560-474-3109	S1620-66500-4	<78286> ...RING ASSEMBLY.....		EA		1	*	*	*		*	154	
X2	F			S1620-64132-60	<78286> ...DOUBLER,TAIL ROTOR.....		EA		1						154	
				S1620-64132-3	<78286> ...COVER INSTALLATION.....				1						154	
			1560-570-4861	S1620-64132-8	<78286> ....GRILL ASSEMBLY RPL-BY...										154	
					1560-981-1731											
P	F		1560-981-1731	S1620-64201-1	<78286> ....SCREEN ASSEMBLY RPLS--..		EA		1	*	2	2		*	154	64
					1560-570-4861											
P	F		1560-066-1389	S1620-64132-9	<78286> ....GRILL ASSEMBLY,PYLON.....										154	
					TAIL ROTOR											
					RPL-BY 1560-879-2480											
P	F		1560-879-2480	S1620-64201-5	<78286> ....SCREEN ASSEMBLY,FAIRING,.		EA		1	*	*	*		*	154	
					TAIL ROTOR PYLON											
P	O		1560-623-5867	S1620-64132-65	<78286> ....COVER,PYLON,TAIL ROTOR...		EA		1	*	2	2		*	154	65
					ATTACHING PARTS											
			5305-286-0213	AN525-832R10	<88044> ....SCREW,MACHINE.....		HD		1	*	*	*		*	154	66
			5310-184-8966	AN960PD8	<88044> ....WASHER,FLAT.....		HD		3	*	*	*		*	154	
			5310-941-6440	MS21083D08	<96906> ....NUT,SELF-LOCKING,HEXAGON.				1	*	*	*		*	154	
			5305-286-0213	AN525-832R10	<88044> ....SCREW,MACHINE.....		HD		9	*	*	*		*	154	67
			5310-184-8966	AN960PD8	<88044> ....WASHER,FLAT.....		HD		18	*	*	*		*	154	
			5310-941-6440	MS21083D08	<96906> ....NUT,SELF-LOCKING,HEXAGON.				9	*	*	*		*	154	
			5305-286-0213	AN525-832R10	<88044> ....SCREW,MACHINE.....		HD		7	*	*	*		*	154	68
			5310-184-8966	AN960PD8	<88044> ....WASHER,FLAT.....		HD		28	*	*	*		*	154	
			5310-941-6440	MS21083D08	<96906> ....NUT,SELF-LOCKING,HEXAGON.				7	*	*	*		*	154	
			5305-286-0213	AN525-832R10	<88044> ....SCREW,MACHINE.....		HD		1	*	*	*		*	154	69
			5310-184-8966	AN960PD8	<88044> ....WASHER,FLAT.....		HD		3	*	*	*		*	154	
			5310-941-6440	MS21083D08	<96906> ....NUT,SELF-LOCKING,HEXAGON.				1	*	*	*		*	154	
			5305-286-0213	AN525-832R10	<88044> ....SCREW,MACHINE.....		HD		1	*	*	*		*	154	70
			5310-184-8966	AN960PD8	<88044> ....WASHER,FLAT.....		HD		2	*	*	*		*	154	
			5310-941-6440	MS21083D08	<96906> ....NUT,SELF-LOCKING,HEXAGON.				1	*	*	*		*	154	
			5305-286-0213	AN525-832R10	<88044> ....SCREW,MACHINE.....		HD		2	*	*	*		*	154	71
			5310-184-8966	AN960PD8	<88044> ....WASHER,FLAT.....		HD		4	*	*	*		*	154	
			5310-941-6440	MS21083D08	<96906> ....NUT,SELF-LOCKING,HEXAGON.				2	*	*	*		*	154	
			5305-281-8527	AN525-832R8	<88044> ....SCREW,MACHINE.....		HD		2	*	*	*		*	154	72
			5310-184-8966	AN960PD8	<88044> ....WASHER,FLAT.....		HD		2	*	*	*		*	154	
			5305-281-8527	AN525-832R8	<88044> ....SCREW,MACHINE.....		HD		2	*	*	*		*	154	73
			5310-184-8966	AN960PD8	<88044> ....WASHER,FLAT.....		HD		2	*	*	*		*	154	
			5305-286-0213	AN525-832R10	<88044> ....SCREW,MACHINE.....		HD		1	*	*	*		*	154	74
			5310-184-8966	AN960PD8	<88044> ....WASHER,FLAT.....		HD		2	*	*	*		*	154	
			5310-941-6440	MS21083D08	<96906> ....NUT,SELF-LOCKING,HEXAGON.				1	*	*	*		*	154	
			5305-286-0213	AN525-832R10	<88044> ....SCREW,MACHINE.....		HD		8	*	*	*		*	154	75
			5310-184-8966	AN960PD8	<88044> ....WASHER,FLAT.....		HD		16	*	*	*		*	154	
			5310-941-6440	MS21083D08	<96906> ....NUT,SELF-LOCKING,HEXAGON.				8	*	*	*		*	154	
			5305-286-0213	AN525-832R10	<88044> ....SCREW,MACHINE.....		HD		9	*	*	*		*	154	76
			5310-184-8966	AN960PD8	<88044> ....WASHER,FLAT.....		HD		18	*	*	*		*	154	
			5310-941-6440	MS21083D08	<96906> ....NUT,SELF-LOCKING,HEXAGON.				9	*	*	*		*	154	
			5305-286-0213	AN525-832R10	<88044> ....SCREW,MACHINE.....		HD		1	*	*	*		*	154	77
			5310-184-8966	AN960PD8	<88044> ....WASHER,FLAT.....		HD		3	*	*	*		*	154	
			5310-941-6440	MS21083D08	<96906> ....NUT,SELF-LOCKING,HEXAGON.				1	*	*	*		*	154	
			5305-286-0213	AN525-832R10	<88044> ....SCREW,MACHINE.....		HD		7	*	*	*		*	154	78

(1) SOURCE, MAINT AND REC CODE (a) SOURCE CODE	(b) MAINT LEVEL	(c) REC CODE	(2) FEDERAL STOCK NUMBER	REFERENCE NUMBER		(3) DESCRIPTION	MODELS USABLE ON CH-34C	(4) UNIT OF ISSUE	(5) QTY INC IN UNIT PACK	(6) QTY INC IN UNIT	(7) 30-DAY DS GS MAINT ALW (a) 1-20	(b) 21-50	(c) 51-100	(8) 1-YR ALWPER 100 EQUIP CNTGCY	(9) DEPOT MAINT ALWPER 100 EQUIP	(10) ILLUSTRATION (a) FIG NO	(b) ITEM NO
			5310-184-8966	AN960PD8	<88044>	....WASHER,FLAT.....		HD		28	*	*	*		*	154	
			5310-941-6440	MS21083D08	<96906>	....NUT,SELF-LOCKING,HEXAGON.				7	*	*	*		*	154	
			5305-286-0213	AN525-832R10	<88044>	....SCREW,MACHINE.....		HD		1	*	*	*		*	154	79
			5310-184-8966	AN960PD8	<88044>	....WASHER,FLAT.....		HD		3	*	*	*		*	154	
			5310-941-6440	MS21083D08	<96906>	....NUT,SELF-LOCKING,HEXAGON.				1	*	*	*		*	154	
						---*---											
P	F		1615-766-8573	S1620-64132-66	<78286>	....DOUBLER,TAIL ROTOR.....		EA		1	*	*	*		*	154	
				S1620-64102-35	<78286>	..PLATING INSTALLATION.....				1						154	
				S1620-64142	<78286>	...HINGE FAIRING INSTALLATION				1						154	
MO	O			S1620-64142-6	<78286>	....STRIP,WEATHER.....NOTE 6		EA		1						154	82
MO	O			S1620-64142-7	<78286>	....STRIP,WEATHER.....NOTE 6		EA		1						154	83
MO	O			S1620-64142-8	<78286>	....STRIP,WEATHER.....NOTE 6		EA		1						154	84
MO	O			S1620-64142-9	<78286>	....STRIP,WEATHER.....NOTE 6		EA		1						154	85
MO	O			S1620-64142-10	<78286>	....STRIP,WEATHER.....NOTE 6		EA		1						154	86
				S1620-64146-1	<78286>	...PANEL INSTALLATION-TAIL... ROTOR GEAR BOX & BEARING				1						154	
				S1620-64146-2	<78286>	...PANEL INSTALLATION-TAIL... ROTOR GEAR BOX & BEARING				1						154	
P	O		1560-675-5793	S1620-64146-3	<78286>	....COVER,TAIL ROTOR..... GEAR BOX AND BEARING NOTE 1		EA		1	*	*	*		*	154	87
				S1620-64146-5	<78286>	....COVER.....NOTE 2 ATTACHING PARTS		EA		1						154	88
			5305-281-8527	AN525-832R8	<88044>	....SCREW,MACHINE.....		HD		12	*	*	*		*	154	89
						---*---											
				S1620-64146-4	<78286>	....DOUBLER.....NOTE 1		EA		1						154	90
				S1620-64146-6	<78286>	....DOUBLER.....NOTE 2 ATTACHING PARTS		EA		1						154	91
				MS20426B4	<96906>	....RIVET.....NOTE 1		EA		12						154	92
				MS20426B4	<96906>	....RIVET.....NOTE 2		EA		8						154	93
						---*---											
				S1620-64174-1	<78286>	...GUSSET-LH.....		EA		1						154	94
				S1620-64174-2	<78286>	...GUSSET-RH..... ATTACHING PARTS		EA		1						154	
P	F		5320-911-9992	HS38-8-3	<73197>	...PIN,RIVET.....		EA		12	*	*	*		*	154	95
			5320-285-9005	HS15-8	<73197>	...COLLAR,RIVET.....		EA		12						154	
P	F		5320-911-9991	HS38-6-3	<73197>	...RIVET.....		EA		4	*	*	*		*	154	96
P	F		5320-579-1215	NAS528A6	<80205>	...COLLAR,RIVET PIN.....		EA		4	*	*	*		*	154	
MF	F			S1620-64102-40	<78286>	...SHIM,TAIL ROTOR PYLON..... NOTE 7		EA		1						154	103
MF	F			S1620-64102-27	<78286>	...PANEL,TAIL ROTOR PYLON.... NOTE 7 ATTACHING PARTS		EA		1						154	
				MS20470AD5	<96906>	...RIVET.....		EA		AR						154	
				MS20470AD4	<96906>	...RIVET.....		EA		AR						154	
			5310-167-0753	AN960PD10L	<88044>	...WASHER,FLAT.....		HD		8	*	*	*		*	154	
			5310-877-5797	MS21044N3	<96906>	...NUT,SELF-LOCKING,HEXAGON..		EA		4	*	*	*		*	154	
			5310-167-0753	AN960PD10L	<88044>	...WASHER,FLAT.....		HD		16	*	*	*		*	154	
			5310-877-5797	MS21044N3	<96906>	...NUT,SELF-LOCKING,HEXAGON..		EA		8	*	*	*		*	154	
						---*---											
MF	F			S1620-64102-18	<78286>	...PANEL.....NOTE 5		EA		1						154	111
MF	F			S1620-64102-8	<78286>	...PANEL.....NOTE 5		EA		1						154	

(1) SOURCE, MAINT AND REC CODE (a) SOURCE CODE	(b) MAINT CATEGORY	(c) REC CODE	(2) FEDERAL STOCK NUMBER	REFERENCE NUMBER		(3) DESCRIPTION	MODELS USABLE ON CH-34C	(4) UNIT OF ISSUE	(5) QTY INC IN UNIT PACK	(6) QTY INC IN UNIT	(7) 30-DAY DS/GS MAINT ALW (a) 1-20	(b) 21-50	(c) 51-100	(8) 1-YR ALW PER 100 EQUIP CNTGCY	(9) DEPOT MAINT ALW PER 100 EQUIP	(10) ILLUSTRATION (a) FIG NO	(b) ITEM NO
				S1620-64169-1	<78286>	...ANGLE INSTALLATION.....				1						154	
				S1620-64169-2	<78286>	...ANGLE INSTALLATION.....				1						154	
				S1620-64169-3	<78286>	....ANGLE.....		EA		1						154	115
MF	F			S1620-64102-3	<78286>	...PLATE.....NOTE 5		EA		1						154	118
MF	F			S1620-64102-4	<78286>	...PLATE.....NOTE 5		EA		1						154	
						ATTACHING PARTS											
MF	F			S1620-64102-15	<78286>	...PANEL.....NOTE 5		EA		1						154	120
				S1620-64116	<78286>	...LATCH INSTALLATION.....				1						154	
P	F		1560-992-2519	295447	<76530>	....WEDJIT ASSEMBLY.....		EA		1	*	*	*		*	154	
				S1620-64101-3	<78286>	..SKELETON ASSEMBLY.....		EA		1						154	
X2	F		1560-630-0943	S1620-64124-8	<78286>	...EDGE ASSEMBLY.....		EA		1	*	*	*		*	154	
			1560-326-3459	S1620-64127	<78286>	...HINGE ASSEMBLY,PYLON.....										154	
						RPL-BY 1560-961-1722											
P	H		1560-961-1722	S1620-64127-4	<78286>	...HINGE ASSEMBLY,PYLON.....		EA		1	*	*	2		*	154	121
						RPLS-- 1560-326-3459											
						ATTACHING PARTS											
			5320-269-9413	NAS1526-4	<80205>	...PIN,RIVET.....		EA		10	*	*	*		*	154	122
			5320-286-4630	NAS1080D6	<80205>	...COLLAR,RIVET PIN.....		EA		10	*	*	*		*	154	
			5320-269-9414	ALPPHE6-5	<29666>	...RIVET PIN.....		EA		6	*	*	*			154	123
			5320-286-4630	NAS1080D6	<80205>	...COLLAR,RIVET PIN.....		EA		6	*	*	*		*	154	
						---*---											
			1560-528-5431	S1620-63129-2	<78286>	....BEARING,SLEEVE RPL-BY...										154	
						3120-068-8121											
P	F		3120-068-8121	S1620-63129-7	<78286>	....BUSHING,SLEEVE RPLS--...		EA		4	5	13	26		*	154	125
						1560-528-5431											
			1560-326-3461	S1620-64131	<78286>	...HINGE ASSEMBLY,PYLON.....										154	
						RPL-BY 1560-996-2178											
P	H		1560-996-2178	S1620-64131-4	<78286>	...HINGE ASSEMBLY,PYLON.....		EA		1	*	*	*		*	154	126
						LOWER ASSEMBLY RPLS--											
						1560-326-3461											
						ATTACHING PARTS											
P	H		5320-619-0157	ALPPHT6-6	<29666>	...PIN,RIVET.....		EA		2	*	*	*		REF	154	128
P	H		5320-489-4823	LCC6	<29666>	...COLLAR,RIVET PIN.....		EA		2	*	*	*		REF	154	
						---*---											
P	F		3120-068-8121	S1620-63129-7	<78286>	....BUSHING,SLEEVE RPLS--...		EA		4	REF	REF	REF		REF	154	130
						1560-528-5431											
			1560-336-0775	S1620-64128	<78286>	....FITTING,FUSELAGE.....										154	
						RPL-BY 1560-672-9452											
P	F		1560-672-9452	S1620-64128-3	<78286>	....FITTING,FUSELAGE.....		EA		1	*	*	2		*	154	131
						RPLS-- 1560-336-0775											
				S1620-64110	<78286>	...FRAME ASSEMBLY.....		EA		1						154	
P	H		1615-326-3460	S1620-64129	<78286>	....FITTING ASSEMBLY,TAIL....		EA		1	*	*	2		*	154	137
						ROTOR PYLON											
X2	F			S1620-64107	<78286>	...FRAME ASSEMBLY.....		EA		1						154	
			5310-777-5793	MS21059L4	<96906>	.....NUT,SELF-LOCKING,PLATE.		EA		2	*	*	*		*	154	163
						ATTACHING PARTS											
			5320-119-6819	MS20470B3-4	<96906>	.....RIVET,SOLID.....		LB		2	*	*	*		*	154	164
						---*---											
P	F		1560-758-5697	S1620-64107-6	<78286>	.....BEARING SUPPORT.....		EA		1	*	*	*		*	154	165
P	F		1560-866-6035	S1620-64107-7	<78286>	.....DOUBLER.....		EA		1	*	*	*		*	154	166
P	F		1560-972-0255	S1620-64150-4	<78286>	...ANGLE,TAIL ROTOR PYLON....		EA		1	*	*	*		*	154	

(1) SOURCE, MAINT AND REC CODE (a) SOURCE CODE	(b) MAINT LEVEL	(c) REC CODE	(2) FEDERAL STOCK NUMBER	REFERENCE NUMBER	(3) DESCRIPTION	MODELS USABLE ON CH-34C	(4) UNIT OF ISSUE	(5) QTY INC IN UNIT PACK	(6) QTY INC IN UNIT	(7) 30-DAY DS GS MAINT ALW (a) 1-20	(b) 21-50	(c) 51-100	(8) 1-YR ALW PER 100 EQUIP CNTGCY	(9) DEPOT MAINT ALW PER 100 EQUIP	(10) ILLUSTRATION (a) FIG NO	(b) ITEM NO
				S1620-64091	<78286> ....FITTING INSTALLATION.....				1						154	
P	F		1560-571-3525	S1620-64091-4	<78286> .....FITTING,PYLON RPLS--...		EA		1	*	*	2		*	154	
					1560-969-9213											
P	F		1560-571-3518	S1620-64091-5	<78286> .....FITTING,PYLON RPLS--...		EA		1	*	*	2		*	154	
					1560-969-9214											
			1560-969-9215	S1620-64091-3	<78286> .....SHIM RPL-BY.....										154	
					1560-571-3527											
P	F		1560-571-3527	S1620-64091-6	<78286> .....SHIM,PYLON RPLS--.....		EA		1	*	2	2		*	154	178
					1560-969-9215											
					ATTACHING PARTS											
			5306-182-1854	AN3CH5A	<88044> .....BOLT,MACHINE.....		EA		4	*	*	*		*	154	179
			5310-167-0753	AN960PD10L	<88044> .....WASHER,FLAT.....		HD		8	*	*	*		*	154	
			5310-877-5797	MS21044N3	<96906> .....NUT,SELF-LOCKING,HEXAGON		EA		4	*	*	*		*	154	
					---*---											
				S1620-64145-5	<78286> ...ANGLE.....		EA		1						154	199
					ATTACHING PARTS											
MF	F			S1620-64155-1	<78286> ...CLIP.....		EA		8						154	205
					MAKEFR											
					AR 9535-618-6843 AL ALLY SH											
					ATTACHING PARTS											
				MS20470B4	<96906> ...RIVET,SOLID.....		EA		3						154	206
					---*---											
MF	F			S1620-64155-2	<78286> ...CLIP.....NOTE 7		EA		10						154	207
MF	F			S1620-64155-3	<78286> ...CLIP.....NOTE 7		EA		7						154	209
MF	F			S1620-64155-4	<78286> ...CLIP.....NOTE 7		EA		9						154	211
				MS20470B4	<96906> ...RIVET,SOLID.....		EA		3						154	212
					---*---											
MF	F			S1620-64155-5	<78286> ...CLIP.....NOTE 7		EA		1						154	213
MF	F			S1620-64155-6	<78286> ...CLIP.....NOTE 7		EA		1						154	215
MF	F			S1620-64155-7	<78286> ...CLIP.....NOTE 7		EA		1						154	217
MF	F			S1620-64155-8	<78286> ...CLIP.....NOTE 7		EA		1						154	219
MF	F			S1620-64155-9	<78286> ...CLIP.....NOTE 7		EA		2						154	221
				MS20470B4	<96906> ...RIVET,SOLID.....		EA		3						154	222
					---*---											
MF	F			S1620-64155-10	<78286> ...CLIP.....NOTE 7		EA		2						154	223
				MS20470B4	<96906> ...RIVET,SOLID.....		EA		3						154	224
					---*---											
MF	F			S1620-64155-11	<78286> ...CLIP.....		EA		2						154	225
					MAKEFR											
					AR 9535-618-6843 AL ALLY SH											
MF	F			S1620-64155-12	<78286> ...CLIP.....NOTE 7		EA		2						154	227
MF	F			S1620-64155-13	<78286> ...CLIP.....NOTE 7		EA		2						154	229
				S1620-64172	<78286> ...CONDUIT INSTALLATION.....				1						154	
					PYLON ELECTRICAL WIRING											
				S1660-64002	<78286> ...CONDUIT INSTALLATION RADIO				1						154	
			5340-533-3515	EAB700-8	<81996> ....CLAMP,SUPPORT.....NOTE 3		EA		1	*	*	*		*	154	231
					ATTACHING PARTS											
			5305-984-6193	MS35206-245	<96906> ....SCREW,MACHINE.....		HD		1	*	*	*		*	154	232
			5310-184-8966	AN960PD8	<88044> ....WASHER,FLAT.....		HD		2	*	*	*		*	154	
			5310-811-3494	MS21044N08	<96906> ....NUT,SELF-LOCKING,HEXAGON.		EA		1	*	*	*		*	154	
					---*---											
X2	F			S1660-64003-1	<78286> ....ANGLE,RADIO CONDUIT.....		EA		1						154	

(1) SOURCE, MAINT AND REC CODE (a) SOURCE CODE	(b) MAINT LEVEL	(c) REC CODE	(2) FEDERAL STOCK NUMBER	REFERENCE NUMBER		(3) DESCRIPTION	MODELS USABLE ON CH-34C	(4) UNIT OF ISSUE	(5) QTY INC IN UNIT PACK	(6) QTY INC IN UNIT	(7) 30-DAY DS GS MAINT ALW (a) 1-20	(b) 21-50	(c) 51-100	(8) 1-YR ALW PER 100 EQUIP CNTGCY	(9) DEPOT MAINT ALW PER 100 EQUIP	(10) ILLUSTRATION (a) FIG NO	(b) ITEM NO
				S1660-64003-2	<78286>	....ANGLE,RADIO CONDUIT.....		EA		1						154	
				S1660-64003-3	<78286>	....ANGLE,RADIO CONDUIT.....		EA		1						154	
				S1660-64003-4	<78286>	....ANGLE,RADIO CONDUIT.....		EA		1						154	
				S1620-64172-1	<78286>	....CONDUIT.....NOTE 3		EA		1						154	235
P	O		1560-632-4421	S1660-64001	<78286>	....CONDUIT.....NOTE 4		EA		1	*	*	*		*	154	236
				S1620-64092	<78286>	..DOUBLER INSTALLATION,..... TAIL ROTOR PYLON				1						154	
P	H		1560-086-7223	S1620-64092-1	<78286>	...DOUBLER,TAIL ROTOR PYLON..		EA		2	*	*	2		*	154	
P	H		5340-086-7358	S1607-2407-2	<78286>	...SHIM.....		EA		2	*	*	*		*	154	
P	H		5340-086-7357	S1607-2407-3	<78286>	...SHIM.....		EA		2	*	*	*		*	154	
				S1607-2407-4	<78286>	...SHIM,PYLON.....		EA		2						154	
P	H		5320-167-4946	P5C	<29666>	...RIVET,BLIND.....		EA		8	*	*	*		REF	154	
P	H		5340-936-9633	NAS1669-3-3	<80205>	...RIVET,BLIND..... RPL-BY 5340-936-9633		EA		6	*	*	*		*	154	
P	H		5340-936-9633	NAS1669-3-3	<80205>	...RIVET,SOLID.....		EA		6	*	*	*		*	154	
P	H		5320-949-9193	NAS1689-3-4	<80205>	...FASTENER,BLIND.....		EA		6	*	*	*		*	154	
P	H		5320-068-9987	P200-5	<98524>	...RIVET,BLIND.....		EA		6	*	*	*		*	154	
P	H		5320-069-0781	NAS1669-3K6	<80205>	...RIVET,BLIND.....		EA		6	*	*	*		*	154	
P	H		5320-059-3312	NAS1669-3K7	<80205>	...RIVET,BLIND.....		EA		6	*	*	*		*	154	
P	H		5320-063-2448	NAS1669-3K13	<80205>	...RIVET,BLIND.....		EA		6	*	*	*		*	154	
P	H		5320-063-2447	P200-17	<98524>	...RIVET,BLIND.....		EA		6	*	*	*		*	154	
			5320-165-8817	MS20470B5-6	<96906>	...RIVET,SOLID.....		LB		AR	*	*	*		*	154	
			5320-165-8820	MS20470B5-12	<96906>	...RIVET,SOLID.....		LB		AR	*	*	*		*	154	
			5320-165-8716	MS20470B6-24	<96906>	...RIVET,SOLID.....		LB		AR	*	*	*		*	154	
			5320-119-6773	MS20470B6-7	<96906>	...RIVET,SOLID.....		LB		AR	*	*	*		*	154	
				S1620-64117	<78286>	.STABILIZER ASSEMBLY AND..... INSTALLATION SEE FIG.160 FOR BREAKDOWN				1						154	237
						NOTE 1											
						U/W PN S1620-64146-1											
						NOTE 2											
						U/W PN S1620-64146-2											
						NOTE 3											
						U/W PN S1620-64172											
						NOTE 4											
						U/W PN S1620-64002											
						NOTE 5											
						MAKEFR											
						AR 9535-554-1414 AL ALLY SH											
						NOTE 6											
						MAKEFR											
						AR 9320-141-7166 RUBBER SH											
						NOTE 7											
						MAKEFR											
						AR 9535-554-1412 AL ALLY SH											

(1) SOURCE, MAINT AND REC CODE (a) SOURCE CODE	(b) MAINT LEVEL	(c) REC CODE	(2) FEDERAL STOCK NUMBER	REFERENCE NUMBER		(3) DESCRIPTION	MODELS USABLE ON CH-34C	(4) UNIT OF ISSUE	(5) QTY INC IN UNIT PACK	(6) QTY INC IN UNIT	(7) 30-DAY DS GS MAINT ALW (a) 1-20	(b) 21-50	(c) 51-100	(8) 1-YR ALW PER 100 EQUIP CNTGCY	(9) DEPOT MAINT ALW PER 100 EQUIP	(10) ILLUSTRATION (a) FIG NO	(b) ITEM NO
				S1635-64300-4	<78286>	PYLON TRANSMISSION..... INSTALLATION SEE FIG.154 FOR NHA										155	
			1560-591-6669	S1635-63301-1	<78286>	.COUPLING ASSEMBLY,TAIL..... ROTOR RPL-BY PN S1635-63301-2										155	
AF	F			S1635-63301-2	<78286>	.COUPLING ASSEMBLY-TAIL..... ROTOR DRIVE SHAFT DISCONNECT RPLS-- 1560-334-6363, 1560-591-6669 SEE FIG. 156 FOR BREAKDOWN		EA		1						155	1
						ATTACHING PARTS											
			5306-292-8252	AN4H7A	<88044>	.BOLT,MACHINE.....		HD		7	*	*	*		*	155	2
			5310-184-9001	AN960PD416L	<88044>	.WASHER,FLAT.....		HD		AR	*	*	*		*	155	
			5310-877-5796	MS21044N4	<96906>	.NUT,SELF-LOCKING,HEXAGON....		EA		7	*	*	*		*	155	
			5306-182-1960	AN4H12A	<88044>	.BOLT,MACHINE.....		HD		8	*	*	*		*	155	3
			5310-194-0637	MS9320-10	<96906>	.WASHER,THRUST.....		EA		16	*	*	*		*	155	
			5310-543-4443	MS20364-428A	<96906>	.NUT,SELF-LOCKING,HEXAGON....		HD		8	*	*	*		*	155	
						---*---											
P	F		1615-304-4621	S1635-63324	<78286>	.SHIM,TAIL ROTOR SHAFT.....		EA		AR	3	7	14		*	155	4
P	F		1615-326-3494	S1635-64312-1	<78286>	.SHIM.....		EA		3	REF	REF	REF		REF	155	5
P	F		1615-334-6364	S1635-64312-2	<78286>	.SHIM.....		EA		3	REF	REF	REF		REF	155	
P	F		1615-326-3495	S1635-64312-3	<78286>	.SHIM.....		EA		3	REF	REF	REF		REF	155	
P	F		1615-620-4506	S1635-64312-5	<78286>	.SHIM.....		EA		3	REF	REF	REF		REF	155	
AF	F	R		S1635-64302-2	<78286>	.SHAFT ASSEMBLY.....		EA		1						155	6
						ATTACHING PARTS											
			5306-182-1960	AN4H12A	<88044>	.BOLT,MACHINE.....		HD		8	*	*	*		*	155	7
			5310-194-0637	MS9320-10	<96906>	.WASHER,THRUST.....		EA		16	*	*	*		*	155	
			5310-543-4443	MS20364-428A	<96906>	.NUT,SELF-LOCKING,HEXAGON....		HD		8	*	*	*		*	155	
						---*---											
P	F		1560-571-6227	S1635-61202-2	<78286>	..RUBBER COUPLING ASSEMBLY... RPLS--1560-326-3492, OBSTS 1560-310-1415		EA		2	REF	REF	REF		REF	155	8
						ATTACHING PARTS											
			5306-182-2017	AN4H6A	<88044>	..BOLT,MACHINE.....		HD		8	*	*	*		*	155	9
			5310-194-0637	MS9320-10	<96906>	..WASHER,THRUST.....		EA		16	*	*	*		*	155	
			5310-877-5796	MS21044N4	<96906>	..NUT,SELF-LOCKING,HEXAGON...		EA		8	*	*	*		*	155	
						---*---											
P	F		1615-034-6179	S1635-63350-4	<78286>	..COUPLING HALF,SHAFT..... RPLS-- 1615-310-1418, 1615-360-1419,& 1615-522-8896		EA		2	REF	REF	REF		REF	155	10
						ATTACHING PARTS											
			5306-180-2721	AN5H26	<88044>	..BOLT,MACHINE.....		EA		2	*	*	*		*	155	11
P	F		5310-596-9485	S1635-63353	<78286>	..WASHER,FLAT.....		EA		2	*	*	*		REF	155	
			5310-088-0553	MS21044N5	<96906>	..NUT,SELF-LOCKING,HEXAGON...		HD		2	*	*	*		*	155	
P	F		1560-308-3534	S1635-63352	<78286>	..WEDGE,TAIL ROTOR DRIVE..... SHAFT		EA		4	REF	REF	REF		REF	155	12
P	F		1560-307-3651	S1635-63351	<78286>	..BUSHING,SLEEVE.....		EA		2	REF	REF	REF		REF	155	13
						---*---											
P	F		1560-991-0387	S1635-64311-1	<78286>	..SHAFT,TRANSMISSION.....		EA		1	REF	REF	REF		REF	155	14

(1) SOURCE, MAINT AND REC CODE (a) SOURCE CODE	(b) MAINT CODE	(c) REC CODE	(2) FEDERAL STOCK NUMBER	REFERENCE NUMBER		(3) DESCRIPTION	MODELS USABLE ON CH-34C	(4) UNIT OF ISSUE	(5) QTY INC IN UNIT PACK	(6) QTY INC IN UNIT	(7) 30-DAY DS GS MAINT ALW (a) 1-20	(b) 21-50	(c) 51-100	(8) 1-YR ALW PER 100 EQUIP CNTGCY	(9) DEPOT MAINT ALW PER 100 EQUIP	(10) ILLUSTRATION (a) FIG NO	(b) ITEM NO
						CONTINUED INSTALLATION,FORWARD RPLS-- 1560-307-3676										155	14
P	F		6150-642-1267	CF4F	<79550>	.LEAD,ELECTRICAL.....		EA		1	*	*	*		REF	155	15
P	F		1615-326-3494	S1635-64312-1	<78286>	.SHIM.....		EA		AR	REF	REF	REF		REF	155	16
P	F		1615-334-6364	S1635-64312-2	<78286>	.SHIM.....		EA		3	REF	REF	REF		REF	155	
P	F		1615-326-3495	S1635-64312-3	<78286>	.SHIM.....		EA		3	REF	REF	REF		REF	155	
P	F		1615-620-4506	S1635-64312-5	<78286>	.SHIM.....		EA		3	REF	REF	REF		REF	155	
			4730-289-2191	AN814-8L	<88044>	.PLUG,MACHINE THREAD.....		EA		1	*	*	*		*	155	17
			5330-808-0794	MS28778-8	<96906>	.PACKING,PREFORMED.....		EA		1	REF	REF	REF		*	155	18
			5306-182-1964	AN4H16A	<88044>	.BOLT,MACHINE.....		HD		4	*	*	*		*	155	19
			5310-141-1795	AN960-416	<88044>	.WASHER,FLAT.....		HD		8	*	*	*		*	155	
			5310-141-1795	AN960-416	<88044>	.WASHER,FLAT.....		HD		4	*	*	*		*	155	
P	F		1560-301-3561	S1635-61205	<78286>	.RING,HALF,TAIL ROTOR DRIVE.. SHAFT		EA		1	REF	REF	REF		REF	155	20
AF	F			S1635-64301-3	<78286>	.SHAFT ASSEMBLY,PYLON.....		EA		1						155	21
AF	F			S1635-64301-4	<78286>	.SHAFT ASSEMBLY.....		EA		1						155	
			1560-340-2023	S1635-64301-1	<78286>	..SHAFT ASSEMBLY,PYLON..... TRANSMISSION RPL-BY 1615-886-5986										155	
P	F		1615-886-5986	S1635-64301-5	<78286>	..SHAFT ASSEMBLY,TAIL..... TRANSMISSION RPLS-- 1560-340-2023, 1560-624-6161 ATTACHING PARTS		EA		1	*	2	2		*	155	
			5306-182-2017	AN4H6A	<88044>	..BOLT,MACHINE.....		HD		8	*	*	*		*	155	22
			5310-194-0637	MS9320-10	<96906>	..WASHER,THRUST.....		EA		16	*	*	*		*	155	
			5310-543-4443	MS20364-428A	<96906>	..NUT,SELF-LOCKING,HEXAGON...		HD		8	*	*	*		*	155	
			5306-182-1960	AN4H12A	<88044>	..BOLT,MACHINE.....		HD		8	*	*	*		*	155	23
			5310-194-0637	MS9320-10	<96906>	..WASHER,THRUST.....		EA		16	*	*	*		*	155	
			5310-543-4443	MS20364-428A	<96906>	..NUT,SELF-LOCKING,HEXAGON...		HD		8	*	*	*		*	155	
						---*---											
P	F		1560-571-6227	S1635-61202-2	<78286>	...RUBBER COUPLING ASSEMBLY.. RPLS-- 1560-326-3492, OBSLTS 1560-310-1415 ATTACHING PARTS		EA		2	REF	REF	REF		REF	155	24
			5306-182-2017	AN4H6A	<88044>	...BOLT,MACHINE.....		HD		8	*	*	*		*	155	25
			5310-194-0637	MS9320-10	<96906>	...WASHER,THRUST.....		EA		16	*	*	*		*	155	
			5310-543-4443	MS20364-428A	<96906>	...NUT,SELF-LOCKING,HEXAGON..		HD		8	*	*	*		*	155	
						---*---											
P	F		1615-034-6179	S1635-63350-4	<78286>	...COUPLING HALF,SHAFT..... RPLS-- 1615-310-1418, 1615-310-1419,& 1615-522-8896 ATTACHING PARTS		EA		2	REF	REF	REF		REF	155	26
			5306-180-2721	AN5H26	<88044>	...BOLT,MACHINE.....		EA		2	*	*	*		*	155	27
P	F		5310-596-9485	S1635-63353	<78286>	...WASHER,FLAT.....		EA		4	*	*	*		REF	155	
			5310-088-0553	MS21044N5	<96906>	...NUT,SELF-LOCKING,HEXAGON..		HD		2	*	*	*		*	155	
P	F		1560-308-3534	S1635-63352	<78286>	...WEDGE,TAIL ROTOR DRIVE.... SHAFT		EA		4	REF	REF	REF		REF	155	28
P	F		1560-307-3651	S1635-63351	<78286>	...BUSHING,SLEEVE.....		EA		2	REF	REF	REF		REF	155	29
						---*---											

(1) SOURCE, MAINT AND REC CODE (a) SOURCE CODE	(b) MAINT LEVEL	(c) REC CODE	(2) FEDERAL STOCK NUMBER	REFERENCE NUMBER		(3) DESCRIPTION	MODELS USABLE ON — CH-34C	(4) UNIT OF ISSUE	(5) QTY INC IN UNIT PACK	(6) QTY INC IN UNIT	(7) 30-DAY DS GS MAINT ALW (a) 1-20	(b) 21-50	(c) 51-100	(8) 1-YR ALW PER 100 EQUIP CNTGCY	(9) DEPOT MAINT ALW PER 100 EQUIP	(10) ILLUSTRATION (a) FIG NO	(b) ITEM NO
AF	F			S1635-61204-1	<78286>	...BEARING ASSEMBLY,TAIL..... ROTOR		EA		1						155	30
P	F		3110-626-9521	SB1114-2	<78286>	....BEARING,BALL,ANNULAR..... RPL-BY 3110-992-1065										155	
P	F		3110-992-1065	SB1114-4	<78286>	...BEARING,BALL,ANNULAR..... RPLS-- 3110-626-9521 ATTACHING PARTS		EA		1	*	*	*		*	155	31
P	F		5340-664-1756	S1635-61210	<78286>	....RING,RETAINING..... ---*---		EA		2	*	*	*		REF	155	32
P	F		1560-346-1160	S1635-61206-2	<78286>	....HOUSING ASSEMBLY,..... SUPPORT BEAM RPLS-- 1560-310-1416		EA		1	REF	REF	REF		REF	155	33
P	F		1560-301-3562	S1635-61208	<78286>	...BUSHING ASSEMBLY,TAIL..... ROTOR DRIVE SHAFT		EA		1	REF	REF	REF		REF	155	34
X1				S1635-64310	<78286>	...SHAFT,PYLON TAIL DRIVE....		EA		1						155	35
P	F		6150-642-1267	CF4F	<79550>	.LEAD,ELECTRICAL.....		EA		1	*	*	*		REF	155	36
P	F		1615-326-3494	S1635-64312-1	<78286>	.SHIM,TAIL DRIVE COUPLING.... PYLON		EA		1	REF	REF	REF		REF	155	37
P	F		1615-334-6364	S1635-64312-2	<78286>	.SHIM,TAIL DRIVE COUPLING....		EA		4	REF	REF	REF		REF	155	
P	F		1615-326-3495	S1635-64312-3	<78286>	.SHIM,TAIL ROTOR COUPLING.... PYLON		EA		4	REF	REF	REF		REF	155	
P	F		1615-620-4506	S1635-64312-5	<78286>	.SHIM,PYLON TAIL DRIVE..... COUPLING		EA		4	REF	REF	REF		REF	155	
		T	1615-303-8591	S1635-64100-1	<78286>	.GEAR BOX ASSEMBLY,..... INTERMEDIATE RPL-BY 1615-671-1773										155	
		T	1615-333-7047	S1635-64100-2	<78286>	.GEAR BOX ASSEMBLY,..... INTERMEDIATE RPL-BY 1615-671-1773										155	
P	F	T	1615-671-1773	S1635-64100-3	<78286>	.GEAR BOX ASSEMBLY,..... INTERMEDIATE RPLS-- 1615-303-8591, 1615-333-7047 USBL EFF 53-4479 & SUBSEQUENT SEE FIG.157 FOR BREAKDOWN ATTACHING PARTS		EA		1	2	3	6	74	*	155	38
			5310-194-0636	MS9320-11	<96906>	.WASHER,THRUST.....		EA		8	*	*	*		*	155	39
			5310-088-0553	MS21044N5	<96906>	.NUT,SELF-LOCKING,HEXAGON.... ---*---		HD		8	*	*	*		*	155	
		T	1615-328-4832	S1635-64000	<78286>	.GEAR BOX ASSEMBLY RPL-BY... 1615-587-6385										155	
		T	1615-332-3547	S1635-64000-1	<78286>	.GEAR BOX ASSEMBLY RPL-BY... 1615-587-6385										155	
		T	1560-564-6463	S1635-64000-2	<78286>	.GEAR BOX ASSEMBLY RPL-BY... 1615-587-6385										155	
P	F	T	1615-587-6385	S1635-64000-3	<78286>	.GEAR BOX ASSEMBLY RPLS--... 1615-328-4832, 1615-332-3547,& 1615-564-6463 SEE FIG.158 FOR BREAKDOWN ATTACHING PARTS		EA		1	2	4	7	86	*	155	40
			5310-194-0636	MS9320-11	<96906>	.WASHER,THRUST.....		EA		8	*	*	*		*	155	41

(1) SOURCE, MAINT AND REC CODE (a) SOURCE CODE	(b) MAINT LEVEL	(c) REC CODE	(2) FEDERAL STOCK NUMBER	REFERENCE NUMBER	(3) DESCRIPTION	MODELS USABLE ON CH-34C	(4) UNIT OF ISSUE	(5) QTY INC IN UNIT PACK	(6) QTY INC IN UNIT	(7) 30-DAY DS GS MAINT ALW (a) 1-20	(b) 21-50	(c) 51-100	(8) 1-YR ALW PER 100 EQUIP CNTGCY	(9) DEPOT MAINT ALW PER 100 EQUIP	(10) ILLUSTRATION (a) FIG NO	(b) ITEM NO
			5310-088-0553	MS21044N5 <96906>	.NUT,SELF-LOCKING,HEXAGON.... ---*---		HD		8	*	*	*		*	155	
					COUPLING ASSEMBLY-TAIL..... ROTOR DRIVE SHAFT DISCONNECT										156	
AF	F			S1635-63301-2 <78286>	COUPLING ASSEMBLY-TAIL..... ROTOR DRIVE SHAFT DISCONNECT RPLS-- 1560-334-6363, 1560-591-6669 SEE FIG.155 FOR NHA		EA								156	
AO	O			S1635-63331 <78286>	.PLATE ASSEMBLY,BRAKE..... ATTACHING PARTS		EA		1						156	1
P	O		5306-591-6672	S1635-63329 <78286>	.BOLT,SHOULDER.....		EA		2	2	2	3		*	156	2
			5310-187-2354	AN960PD416 <88044>	.WASHER,FLAT.....		HD		2	*	*	*		*	156	
			5310-543-4443	MS20364-428A <96906>	.NUT,SELF-LOCKING,HEXAGON....		HD		2	*	*	*		*	156	3
P	O		1560-307-3650	S1635-63323 <78286>	.SHIM,TAIL ROTOR SHAFT..... ---*---		EA		1	2	4	8		*	156	4
			5305-010-5137	MS24694S109 <96906>	..SCREW,MACHINE.....		EA		1	*	*	*		*	156	5
			5310-187-2354	AN960PD416 <88044>	..WASHER,FLAT.....		HD		1	*	*	*		*	156	
			5310-877-5796	MS21044N4 <96906>	..NUT,SELF-LOCKING,HEXAGON...		EA		1	*	*	*		*	156	
P	O		1560-315-0895	S1635-63327 <78286>	..SPRING,HELICAL,COMPRESSION.		EA		1	2	5	10		*	156	6
P	O		1560-639-0591	S1635-63330 <78286>	..LOCK,TAIL DRIVE SHAFT..... DISCONNECT		EA		1	2	2	3		*	156	7
			1560-304-4619	S1635-63318 <78286>	..PLATE,BRAKE-TAIL ROTOR..... RPL-BY 1560-639-0588										156	
P	O		1560-639-0588	S1635-63318-1 <78286>	..BRAKE PLATE,TAIL ROTOR..... DRIVE RPLS-- 1560-304-4619		EA		1	2	2	5		*	156	8
AF	F			S1635-63302-1 <78286>	.HOUSING AND SHAFT ASSEMBLY..		EA		1						156	9
P	F		5340-282-5584	RST143 <80756>	..RING,RETAINING.....		EA		1	*	*	*		*	156	10
P	F		1560-307-3642	S1635-63305 <78286>	..COUPLING ASSEMBLY,DRIVE....		EA		1	*	2	2		*	156	11
P	F		1560-663-2854	S1635-63328 <78286>	..SPRING,HELICAL..... COMPRESSION RPLS-- 1560-315-0894		EA		1	*	*	*		*	156	12
P	F		1560-307-3646	S1635-63316 <78286>	..RETAINER-SPRING.....		EA		1	*	*	*		*	156	13
			1560-315-0894	S1635-63315 <78286>	..SPRING,HELICAL,COMPRESSION. RPL-BY 1560-663-2854										156	
P	F		1560-663-2854	S1635-63328 <78286>	..SPRING,HELICAL,COMPRESSION. RPLS-- 1560-315-0894		EA		2	*	*	*		*	156	
P	F		1615-304-4623	S1635-63326 <78286>	..SPACER,TRANSMISSION U/W... S1635-63315		EA		1	*	*	*		*	156	
			5315-234-1864	MS24665-302 <96906>	..PIN,COTTER.....		HD		1	*	*	*		*	156	14
P	F		5310-639-3595	S1635-64125 <78286>	..NUT,PLAIN ROUND.....		EA		1	*	*	2		*	156	15
P	D		1560-307-3674	S1635-64120 <78286>	..FLANGE,TRANSMISSION SYSTEM.		EA		1	*	*	*		*	156	16
P	F		1560-307-3649	S1635-63322 <78286>	..RETAINER,BEARING.....		EA		1	*	*	*		*	156	17

(1) SOURCE, MAINT AND REC CODE (a) SOURCE CODE	(b) MAINT LEVEL	(c) REC CODE	(2) FEDERAL STOCK NUMBER	REFERENCE NUMBER		(3) DESCRIPTION	MODELS USABLE ON CH-34C	(4) UNIT OF ISSUE	(5) QTY NC IN UNIT PACK	(6) QTY INC IN UNIT	(7) 30-DAY DS GS MAINT ALW (a) 1-20	(b) 21-50	(c) 51-100	(8) 1 YR ALW PER 100 EQUIP CNTGCY	(9) DEPOT MAINT ALW PER 100 EQUIP	(10) ILLUSTRATION (a) FIG NO	(b) ITEM NO
						CONTINUED										156	17
						ATTACHING PARTS											
			5310-877-5796	MS21044N4	<96906>	..NUT,SELF-LOCKING,HEXAGON...		EA		6	*	*	*		*	156	18
						---*---											
P	F		1615-304-4622	S1635-63325	<78286>	..SHIM,TAIL ROTOR DRIVE SHAFT		EA		1	*	2	2		*	156	19
P	F	U	3110-624-3621	SB1113-1	<78286>	..BEARING,BALL,ANNULAR.....		EA		1	2	4	7		*	156	20
P	F		1560-304-4620	S1635-63321	<78286>	..SPACER,TAIL ROTOR SHAFT....		SE		1	*	*	*		*	156	21
			1560-307-3643	S1635-63311	<78286>	..SHAFT,MAIN TAIL ROTOR.....										156	
						COUPLING RPL-BY											
						1560-703-8954											
P	F		1560-703-8954	S1635-63311-1	<78286>	..SHAFT,DISCONNECT COUPLING..		EA		1	*	2	2		*	156	22
						RPLS-- 1560-307-3643											
			4730-050-4207	MS15001-4	<96906>	..FITTING,GREASE.....		EA		1	*	*	*		*	156	23
P	F		1615-326-3493	S1635-63303	<78286>	..HOUSING ASSEMBLY.....		EA		1	*	*	2		*	156	24
P	F	T	1615-671-1773	S1635-64100-3	<78286>	GEAR BOX ASSEMBLY,.....		EA			REF	REF	REF	REF		157	
						INTERMEDIATE RPLS--											
						1560-303-8591,											
						1560-333-7047 USBL EFF											
						53-4479 & SUBSEQUENT SEE											
						FIG.155 FOR NHA											
			5310-543-4443	MS20364-428A	<96906>	.NUT,SELF-LOCKING,HEXAGON....		HD		8	*	*	*		*	157	1
			5310-141-1795	AN960-416	<88044>	.WASHER,FLAT.....		HD		8	*	*	*		*	157	
P	F		1560-317-0852	S1635-64127	<78286>	.FRAME,WINDOW,INTERMEDIATE...		EA		1	*	*	*		*	157	2
						GEAR BOX											
P	F		1560-320-6943	S1635-64129	<78286>	.GASKET.....NOTE 1		EA		1	*	2	2		*	157	3
			1560-527-6951	S1635-64128	<78286>	.WINDOW,OBSERVATION RPL-BY..		EA			*	*	*			157	
						1560-340-2032											
P	F		1560-340-2032	S1635-64128-1	<78286>	.WINDOW,OBSERVATION RPLS--..		EA		1	*	2	2		*	157	4
						1560-527-6951											
P	F		1560-320-6943	S1635-64129	<78286>	.GASKET.....NOTE 1		EA		1	*	REF	REF		REF	157	5
			4730-200-0580	AN814-16DL	<88044>	.PLUG,MACHINE THREAD.....		EA		1	*	*	*		*	157	6
			1560-307-3670	S1635-64102	<78286>	.HOUSING ASSEMBLY-INPUT.....										157	
						RPL-BY PN S1635-64102-2											
AD	D			S1635-64102-2	<78286>	.HOUSING ASSEMBLY-INPUT.....		EA		1						157	7
						RPLS-- 1560-307-3670											
						ATTACHING PARTS											
			5310-167-0820	AN960-516	<88044>	.WASHER,FLAT.....		HD		8					*	157	
			5310-088-0553	MS21044N5	<96906>	.NUT,SELF-LOCKING,HEXAGON....		HD		8					*	157	8
						---*---											
			5315-234-1856	MS24665-155	<96906>	..PIN,COTTER.....		HD		1	*	*	*		*	157	9
P	F		5310-639-3595	S1635-64125	<78286>	..NUT,PLAIN,ROUND.....		EA		1	*	*	REF		REF	157	10
P	D		1560-307-3674	S1635-64120	<78286>	..FLANGE,TRANSMISSION SYSTEM.		EA		1					REF	157	11
			5330-707-6807	D65X979-21195	<03668>	..SEAL RPL-BY.....										157	
						5330-956-3342											
P	F		5330-956-3342	21708-0979	<73680>	..SEAL RPLS-- 5330-707-6807.		EA		1	*	*	*		*	157	12
P	D		3110-624-3620	SB1112-1	<78286>	..BEARING,BALL,ANNULAR.....		EA		1					100	157	13

(1) SOURCE, MAINT AND REC CODE (a) SOURCE CODE	(b) MAINT LEVEL	(c) REC CODE	(2) FEDERAL STOCK NUMBER	REFERENCE NUMBER		(3) DESCRIPTION	MODELS USABLE ON CH-34C	(4) UNIT OF ISSUE	(5) QTY INC IN UNIT PACK	(6) QTY INC IN UNIT	(7) 30-DAY DS/GS MAINT ALW (a) 1 20	(b) 21-50	(c) 51-100	(8) 1-YR ALW PER 100 EQUIP CNTGCY	(9) DEPOT MAINT ALW PER 100 EQUIP	(10) ILLUSTRATION (a) FIG NO	(b) ITEM NO
P	D		1560-307-3671	S1635-64105	<78286>	..HOUSING AND LINER ASSEMBLY.		EA		1					*	157	14
						ATTACHING PARTS											
			5306-780-8452	MS20073-05-15	<96906>	..BOLT,MACHINE.....		EA		3					*	157	15
			5310-167-0820	AN960-516	<88044>	..WASHER,FLAT.....		HD		3					*	157	
						---*---											
P	D		1560-306-4444	S1635-64117	<78286>	...LINER,INTERMEDIATE GEAR...		EA		1					*	157	16
						BOX OUTPUT BEARING											
P	D		1615-209-2761	S1635-64118	<78286>	...BUSHING,SLEEVE.....		EA		1					*	157	17
			3110-208-3363	MS172246	<96906>	..NUT,PLAIN,ROUND.....		EA		1					*	157	18
			3110-566-8872	MS172211	<96906>	..WASHER,KEY.....NOTE 1		EA		1					*	157	19
P	D		3110-624-3625	SB1253-1	<78286>	..BEARING,BALL,ANNULAR.....		PR		1					100	157	20
P	H		1615-307-3673	S1635-64119	<78286>	..PLATE,RETAINING,BEARING....		EA		1	*	*	*		*	157	21
						SYSTEM											
P	D		1560-304-4629	S1635-64107	<78286>	..GEAR ASSEMBLY.....		EA		1					*	157	22
						INTERMEDIATE GEAR BOX											
P	D		1560-572-8278	S1635-64139-2	<78286>	...PLUG ASSEMBLY.....		EA		1					*	157	23
P	H		1560-307-3675	S1635-64126	<78286>	.SHIM,INTERMEDIATE GEAR BOX..		EA		1	*	*	*		*	157	24
P	D		1560-328-4833	S1635-64151-1	<78286>	.PLATE ASSEMBLY,GEAR BOX.....		EA		1					*	157	25
						COVER											
						ATTACHING PARTS											
			5306-182-2016	AN4H5A	<88044>	.BOLT,MACHINE.....		HD		8					*	157	26
			5310-141-1795	AN960-416	<88044>	.WASHER,FLAT.....		HD		8					*	157	
						---*---											
P	D		4730-203-3914	A722	<97484>	..PLUG,MACHINE THREAD..NOTE 2		EA		1	*	REF	REF		REF	157	27
			5330-804-5695	MS28778-6	<96906>	...PACKING,PREFORMED.....		EA		1	REF	REF	REF		*	157	
			5330-285-9842	MS28778-10	<96906>	..PACKING,PREFORMED.....		EA		1	REF	REF	REF	REF	*	157	28
P	D		1560-306-4445	S1635-64136	<78286>	.GASKET,INTERMEDIATE GEAR BOX		EA		1					*	157	29
			1680-304-4627	S1635-64103	<78286>	.HOUSING ASSEMBLY RPL-BY....										157	
						PN S1635-64103-2											
			1560-772-5447	S1635-64103-1	<78286>	.HOUSING ASSEMBLY.....										157	
						RPL-BY PN S1635-64103-2											
AD	D			S1635-64103-2	<78286>	.HOUSING ASSEMBLY RPLS--....		EA		1						157	30
						1560-772-5447											
						1680-304-4627											
						ATTACHING PARTS											
			5305-045-3180	MS24694S101	<96906>	.SCREW,MACHINE.....		EA		3					*	157	31
						---*---											
			5315-234-1864	MS24665-302	<96906>	..PIN,COTTER.....		HD		1	*	*	*		*	157	32
P	F		5310-639-3595	S1635-64125	<78286>	..NUT,PLAIN,ROUND.....		EA		1	*	*	REF		REF	157	33
P	D		1560-307-3674	S1635-64120	<78286>	..FLANGE,TRANSMISSION SYSTEM.		EA		1					REF	157	34
			5306-150-9290	MS20073-05-16	<96906>	..BOLT,MACHINE.....		EA		3	*	*	*		*	157	35
			5310-167-0820	AN960-516	<88044>	..WASHER,FLAT.....		HD		3	*	*	*		*	157	
P	D		1615-304-4630	S1635-64116	<78286>	..SPIRAL,TRANSMISSION SYSTEM.		EA		1					*	157	36
P	D		3110-624-3625	SB1253-1	<78286>	..BEARING,BALL,ANNULAR.....		PR		1					REF	157	37
P	H		1615-307-3673	S1635-64119	<78286>	..PLATE,RETAINING,BEARING....		EA		1	*	*	*		REF	157	38
P	D		1560-307-3672	S1635-64108	<78286>	..GEAR ASSEMBLY.....		EA		1					*	157	39
			1560-570-4889	S1635-64139-3	<78286>	...PLUG ASSEMBLY.....NOTE 1		EA		1						157	40
P	D		5330-641-0887	S1635-64140	<78286>	...SEAL,TRANSMISSION SYSTEM..		EA		1					*	157	41
			5330-297-9832	D63X979	<73680>	..SEAL RPL-BY.....										157	
						5330-956-3342											
P	F		5330-956-3342	21708-0979	<73680>	..SEAL RPLS--.....		EA		1	*	*	*		REF	157	42
						5330-297-9832,											

(1) SOURCE, MAINT AND REC CODE (a) SOURCE CODE	(b) MAINT LEVEL	(c) REC CODE	(2) FEDERAL STOCK NUMBER	REFERENCE NUMBER	(3) DESCRIPTION	MODELS USABLE ON CH-34C	(4) UNIT OF ISSUE	(5) QTY INC IN UNIT PACK	(6) QTY INC IN UNIT	(7) 30-DAY DS GS MAINT ALW (a) 1-20	(b) 21-50	(c) 51-100	(8) 1-YR ALWPER 100 EQUIP CNTGCY	(9) DEPOT MAINT ALWPER 100 EQUIP	(10) ILLUSTRATION (a) FIG NO	(b) ITEM NO
					CONTINUED										157	42
					5330-707-6807											
P	D		3110-624-3620	SB1112-1 <78286>	..BEARING,BALL,ANNULAR.....		EA		1					REF	157	43
P	D		1615-304-4628	S1635-64106 <78286>	..HOUSING AND LINER ASSEMBLY.		EA		1					*	157	44
P	D		1560-306-4444	S1635-64117 <78286>	...LINER,INTERMEDIATE GEAR...		EA		1					REF	157	45
					BOX OUTPUT BEARING											
P	D		1615-209-2761	S1635-64118 <78286>	...BUSHING,SLEEVE.....		EA		1					REF	157	46
P	H		1560-307-3675	S1635-64126 <78286>	.SHIM,INTERMEDIATE GEAR BOX..		EA		1	*	*	*		REF	157	47
P	F		5340-290-7231	1604-81 <93460>	.PLUG,PROTECTIVE.....		EA		1	*	*	*		*	157	48
P	D		1560-307-3669	S1635-64101-1 <78286>	.HOUSING ASSEMBLY.....		EA		1					*	157	50
P	D		5307-497-4004	SF101-9SA10A <83324>	..STUD,LOCKED IN.....		EA		8					*	157	51
P	D		5310-200-7749	RL24SB7 <83324>	..RING,LOCK,SERRATED.....		HD		8					REF	157	
			5307-025-8293	SF111-11SA14A <83324>	..STUD,LOCKED IN RPL-BY.....										157	
					5307-637-8908											
P	D		5307-637-8908	SF111-11SA15A <83324>	..STUD,LOCKED IN RPLS--.....		EA		8					*	157	52
					5307-025-8293											
P	D		5310-682-5877	RL28SB8 <83324>	..RING,LOCK,SERRATED.....		HD		8					*	157	
P	D		5307-025-8295	SF111-11SA18A <83324>	..STUD,LOCKED IN.....		EA		8					*	157	53
P	D		5310-682-5877	RL28SB8 <83324>	..RING,LOCK,SERRATED.....		HD		8					REF	157	
P	D		5340-290-5090	R206SB8 <83324>	..INSERT,SCREW THREAD.....		EA		3					*	157	54
P	D		5340-664-2867	R1206SB10 <83324>	..INSERT,SCREW THREAD.....		EA		1					*	157	
P	D		5310-682-5877	RL28SB8 <83324>	..RING,LOCK,SERRATED.....		HD		3					REF	157	
P	D		5340-200-4184	R206SB10 <83324>	..INSERT,SCREW THREAD.....		EA		8					*	157	55
P	D		5310-682-5877	RL28SB8 <83324>	..RING,LOCK,SERRATED.....		HD		8					REF	157	
				S1635-64111-2 <78286>	..HOUSING-CENTER.....		EA		1						157	56
			4730-278-3462	AN932-2 <88044>	...PLUG,PIPE.....NOTE 3		EA		1					*	157	57
P	D		5340-626-7262	S1635-64111-4 <78286>	...PLUG,HOUSING INTERMEDIATE.		EA		3					*	157	58
					GEAR BOX CENTER											
P	D		1560-715-2260	S1607-3602-1 <78286>	PARTS KIT,INTERMEDIATE GEAR..		EA		1					*	157	
					BOX U/O 1615-671-1773											
					SEE CHAPTER 5 FOR											
					COMPONENTS											
P	D		1560-715-2261	S1607-3602-2 <78286>	PARTS KIT,INTERMEDIATE GEAR..		EA		1					*	157	
					BOX-<CURE DATE> U/O											
					1615-671-1773 SEE											
					FUNCTIONAL GROUP 50											
					FOR COMPONENTS											
					NOTE 1											
					COMPONENT OF KIT											
					1560-715-2260											
					NOTE 2											
					COMPONENT OF KIT											
					1560-715-2258 WHICH APPEARS											
					IN FIG.158											
					NOTE 3											
					COMPONENT OF KIT											
					1560-715-2262											

(1) SOURCE, MAINT AND REC CODE (a) SOURCE CODE	(b) MAINT LEVEL	(c) REC CODE	(2) FEDERAL STOCK NUMBER	REFERENCE NUMBER	(3) DESCRIPTION	MODELS USABLE ON CH-34C	(4) UNIT OF ISSUE	(5) QTY INC IN UNIT PACK	(6) QTY INC IN UNIT	(7) 30-DAY DS/GS MAINT ALW (a) 1-20	(b) 21-50	(c) 51-100	(8) 1-YR ALW PER 100 EQUIP CNTGCY	(9) DEPOT MAINT ALW PER 100 EQUIP	(10) ILLUSTRATION (a) FIG NO	(b) ITEM NO
					GEAR BOX ASSEMBLY-TAIL ROTOR.										158	
P	F	T	1615-587-6385	S1635-64000-3 <78286>	GEAR BOX ASSEMBLY,TAIL ROTOR. RPLS-- 1615-328-4832, 1615-332-3547,& 1615-564-6463 SEE FIG.155 FOR NHA		EA			REF	REF	REF	REF		158	
P	O		4730-203-3914	A722 <97484>	.PLUG,MACHINE THREAD..... NOTE 1		EA		1	*	REF	REF		REF	158	1
			5330-804-5695	MS28778-6 <96906>	..PACKING,PREFORMED.....		EA		1	REF	REF	REF		*	158	
			5330-250-1218	AN123870 <88044>	.PACKING,PREFORMED.....		EA		1	*	*	*		*	158	2
P	O		1560-307-3663	S1635-64050 <78286>	.FILL PLUG AND DIPSTICK..... ASSEMBLY		EA		1	*	*	*		*	158	3
			5330-808-0794	MS28778-8 <96906>	.PACKING,PREFORMED.....		EA		1	REF	REF	REF		*	158	4
MF	O			S1635-64063-1 <78286>	.PLATE,IDENTIFICATION..... MAKEFR AR 9535-554-1411 AL ALLY SH		EA		1						158	5
AF	F			S1635-64042-1 <78286>	.COVER ASSEMBLY..... ATTACHING PARTS		EA		1						158	6
			5310-141-1795	AN960-416 <88044>	.WASHER,FLAT.....		HD		14	*	*	*		*	158	
			5310-877-5796	MS21044N4 <96906>	.NUT,SELF-LOCKING,HEXAGON.... ---*---		EA		14	*	*	*		*	158	7
			5305-045-3180	MS24694S101 <96906>	..SCREW,MACHINE.....		EA		14	*	*	*		*	158	8
			5310-183-4406	AN960PD10 <88044>	..WASHER,FLAT.....		HD		14	*	*	*		*	158	
			5310-877-5797	MS21044N3 <96906>	..NUT,SELF-LOCKING,HEXAGON...		EA		14	*	*	*		*	158	
P	F		1615-307-3661	S1635-64040 <78286>	..FRAME,WINDOW-TRANSMISSION..		EA		1	*	*	*		*	158	9
P	F		1560-990-1334	S1635-64041-1 <78286>	..WINDOW,OBSERVATION.....		EA		1	*	2	2		*	158	10
P	F		1615-315-0897	S1635-64039 <78286>	..GASKET.....NOTE 1		EA		1	2	2	4		*	158	11
P	F		1615-307-3656	S1635-64015 <78286>	..COVER-INTERMEDIATE HOUSING.		EA		1	*	*	2		*	158	12
P	F		1560-527-6288	S1635-64043 <78286>	.GASKET.....		EA		1	2	3	5		*	158	13
			1560-307-3619	S1610-34001 <78286>	.BEAM,TAIL ROTOR PITCH..... CONTROL INSTALLATION RPL-BY 1560-591-6664										158	
			1560-323-4271	S1610-34004 <78286>	.BEAM,TAIL ROTOR PITCH..... CONTROL INSTALLATION RPL-BY 1560-591-6664		EA			*	*	*			158	
		R	1560-693-8827	S1610-34004-1 <78286>	.BEAM,TAIL ROTOR PITCH..... CONTROL INSTALLATION RPL-BY 1560-591-6664		EA			*	*	*			158	
P	F		1560-591-6664	S1610-34004-2 <78286>	.BEAM,TAIL ROTOR RPLS--..... 1560-307-3619, 1560-323-4271, 1560-693-8827,& 1560-787-2406 ATTACHING PARTS		EA		1	2	2	3		*	158	14
			5306-639-2474	AN8H6A <88044>	.BOLT,MACHINE.....		EA		1	*	*	*		*	158	15
			5315-200-2284	AN386-3-16 <88044>	.PIN,TAPERED,THREADED.....		EA		1	*	*	*		*	158	16
			5310-167-0686	AN975-4 <88044>	.WASHER,RECESSED.....		HD		1	*	*	*		*	158	
			5310-176-8108	AN320-4 <88044>	.NUT,SLOTTED,HEXAGON.....		HD		1	*	*	*		*	158	
			5315-234-1856	MS24665-155 <96906>	.PIN,COTTER..... ---*---		HD		1	*	*	*		*	158	
P	F		1560-591-6665	S1610-34006 <78286>	.COLLECT,TAIL ROTOR.....		EA		1	*	2	2		*	158	17
P	D		1560-524-8337	S1635-64072 <78286>	.BOOT,DUST AND MOISTURE SEAL.		EA		1					*	158	18

(1) SOURCE, MAINT AND REC CODE (a) SOURCE CODE	(b) MAINT LEVEL	(c) REC CODE	(2) FEDERAL STOCK NUMBER	REFERENCE NUMBER	(3) DESCRIPTION	MODELS USABLE ON CH-34C	(4) UNIT OF ISSUE	(5) QTY INC IN UNIT PACK	(6) QTY INC IN UNIT	(7) 30-DAY DS GS MAINT ALW (a) 1-20	(b) 21-50	(c) 51-100	(8) 1-YR ALW PER 100 EQUIP CNTGCY	(9) DEPOT MAINT ALW PER 100 EQUIP	(10) ILLUSTRATION (a) FIG NO	(b) ITEM NO
P	D		1560-520-6318	S1635-64068	<78286> .ROD ASSEMBLY,TAIL ROTOR GEAR ATTACHING PARTS		EA		1					*	158	19
			5306-174-4114	AN174H14	<88044> .BOLT,MACHINE.....		EA		1					*	158	20
			5310-141-1795	AN960-416	<88044> .WASHER,FLAT.....		HD		2					*	158	
			5310-176-8108	AN320-4	<88044> .NUT,SLOTTED,HEXAGON.....		HD		1					*	158	
			5315-234-1856	MS24665-155	<96906> .PIN,COTTER.....		HD		1					*	158	
P	D		5340-664-8894	S1635-64020	<78286> .RING,RETAINING.....		EA		1					*	158	21
			5315-234-1864	MS24665-302	<96906> .PIN,COTTER.....		HD		1					*	158	
P	D		1560-568-5268	S1635-64019	<78286> .RING,EXTERNALLY THREADED.... PITCH CONTROL SHAFT		EA		1					*	158	22
					---*---											
			5310-167-0821	AN960-616	<88044> .WASHER,FLAT.....		HD		1					*	158	
			5310-582-6058	AN310-6	<88044> .NUT,CASTELLATED,HEXAGON.....		EA		1					*	158	23
			5315-234-1856	MS24665-155	<96906> .PIN,COTTER.....		HD		1					*	158	
P	D		3110-580-0704	SB2300-3	<78286> .BEARING,ROLLER,..... SELF-ALIGNING		EA		1					*	158	24
P	D		1560-313-0576	S1635-64065	<78286> .SPACER,TAIL ROTOR GEAR BOX..		EA		1					*	158	25
P	D		1560-305-1659	S1635-64055-1	<78286> .SHAFT ASSEMBLY,TAIL ROTOR...		EA		1					*	158	26
P	D		1560-662-8018	S1635-64052	<78286> ..BEARING,SLEEVE.....		EA		1					*	158	27
X1				S1635-64054-1	<78286> ..SHAFT-ACTUATOR WHEN..... EXHTD RQTN NHA 1560-305-1659		EA		1						158	28
			1615-307-3667	S1635-64062	<78286> .ARM ASSEMBLY,PIVOT SHAFT.... RPL-BY 1615-608-0700										158	
P	F		1615-608-0700	S1635-64062-2	<78286> .ARM ASSEMBLY RPLS--..... 1615-307-3667 ATTACHING PARTS		EA		1	*	*	*		*	158	29
			5315-200-2285	AN386-3-18	<88044> .PIN,TAPERED,THREADED.....		EA		2	*	*	*		*	158	30
			5310-167-0686	AN975-4	<88044> .WASHER,RECESSED.....		HD		2	*	*	*		*	158	
			5310-176-8108	AN320-4	<88044> .NUT,SLOTTED,HEXAGON.....		HD		2	*	*	*		*	158	
			5315-234-1856	MS24665-155	<96906> .PIN,COTTER.....		HD		2	*	*	*		*	158	
					---*---											
			3120-580-9991	NAS538-4P17	<80205> ..BUSHING,SLEEVE.....		EA		1	*	*	*		*	158	31
			3120-810-1964	NAS537-4P25	<80205> ..BUSHING,SLEEVE.....		EA		1	*	*	*			158	32
X1				S1635-64061-2	<78286> ..ARM,TAIL ROTOR GEAR BOX....		EA		1						158	33
P	F		1615-307-3659	S1635-64036	<78286> .RETAINER,TRANSMISSION..... ATTACHING PARTS		EA		1	*	*	2		*	158	34
			5310-141-1795	AN960-416	<88044> .WASHER,FLAT.....		HD		4	*	*	*		*	158	35
			5310-877-5796	MS21044N4	<96906> .NUT,SELF-LOCKING,HEXAGON....		EA		4	*	*	*		*	158	
					---*---											
P	D		1560-515-5688	S1635-64038	<78286> .GASKET.....		EA		1					*	158	36
			5330-702-7656	65X321	<73680> .SEAL,PLAIN,ENCASED RPL-BY.. 5330-951-6506										158	
P	F		5330-951-6506	21708-0321	<73680> .SEAL RPLS-- 5330-702-7656..		EA		1	*	*	*		*	158	37
P	D		1560-307-3660	S1635-64037	<78286> .COVER,PIVOT,SHAFT..... TRANSMISSION ATTACHING PARTS		EA		1					*	158	39
			5310-141-1795	AN960-416	<88044> .WASHER,FLAT.....		HD		4					*	158	
			5310-877-5796	MS21044N4	<96906> .NUT,SELF-LOCKING,HEXAGON....		EA		4					*	158	40
					---*---											
P	D		1560-515-5688	S1635-64038	<78286> .GASKET.....		EA		1					REF	158	41
			5340-803-7320	MS16624-1106	<96906> .RING,RETAINING.....		EA		1					*	158	42

(1) SOURCE, MAINT AND REC CODE (a) SOURCE CODE	(b) MAINT LEVEL	(c) REC CODE	(2) FEDERAL STOCK NUMBER	REFERENCE NUMBER	(3) DESCRIPTION	MODELS USABLE ON CH-34C	(4) UNIT OF ISSUE	(5) QTY INC IN UNIT PACK	(6) QTY INC IN UNIT	(7) 30-DAY DS/GS MAINT ALW (a) 1-20	(b) 21-50	(c) 51-100	(8) 1-YR ALW PER 100 EQUIP CNTGCY	(9) DEPOT MAINT ALW PER 100 EQUIP	(10) ILLUSTRATION (a) FIG NO	(b) ITEM NO
P	D		3110-142-4330	FS914	<81996> .BEARING,BALL,AIRFRAME.....		EA		1					REF	158	43
P	D		1615-308-3536	S1635-64066	<78286> .PLUG,TAIL ROTOR GEAR BOX....		EA		1					1	158	44
			5315-234-1856	MS24665-155	<96906> .PIN,COTTER.....		HD		1					*	158	45
AD	D			S1635-64057	<78286> .PIVOT SHAFT AND LEVER..... ASSEMBLY		EA		1						158	46
			5310-167-0686	AN975-4	<88044> ..WASHER,RECESSED.....		HD		1					*	158	
			5310-176-8108	AN320-4	<88044> ..NUT,SLOTTED,HEXAGON.....		HD		1					*	158	
P	D		1560-560-9146	S1635-64032	<78286> ..LEVER ASSEMBLY,TAIL ROTOR..		EA		1					*	158	48
P	D		3110-926-4655	DW4K	<21335> ...BEARING,BALL,AIRFRAME.....		EA		1					REF	158	49
P	D		1560-565-5628	S1635-64053	<78286> ..SHAFT,TAIL ROTOR,GEAR BOX..		EA		1					*	158	51
				S1635-64001	<78286> .HOUSING AND GEAR ASSEMBLY...		EA		1						158	
			1615-587-6385	S1635-64000-3	<78286> .GEARBOX ASSEMBLY..... RPLS-- PN S1635-64001 ATTACHING PARTS		EA		1	*	*	*		*	158	52
			5310-167-0820	AN960-516	<88044> .WASHER,FLAT.....		HD		8					*	158	53
			5310-088-0553	MS21044N5	<96906> .NUT,SELF-LOCKING,HEXAGON.... ---*---		HD		8					*	158	53A
			5315-234-1864	MS24665-302	<96906> ..PIN,COTTER.....		HD		1	*	*	*		*	158	54
P	F		5310-639-3595	S1635-64125	<78286> ..NUT,PLAIN,ROUND.....		EA		1	*	*	REF		REF	158	55
P	D		1560-662-6716	S1635-64028	<78286> ..WASHER,THRUST.....		EA		1					*	158	56
P	D		3110-624-3495	SB3201A1	<78286> ..CONE AND ROLLERS,TAPERED... ROLLER BEARING		EA		1					REF	158	57
P	D		3110-624-3494	SB3201B1	<78286> ..CUP,TAPERED ROLLER BEARING.		EA		1					REF	158	58
P	D		1560-304-4626	S1635-64060	<78286> ..PINION AND PLUG ASSEMBLY...		EA		1					*	158	59
			1560-570-4888	S1635-64059-1	<78286> ...PLUG ASSEMBLY,TAIL ROTOR.. NOTE 1		EA		1						158	60
P	D		1560-670-1669	S1635-64017	<78286> ...GEAR,BEVEL.....		EA		1					*	158	61
P	F		1560-307-3657	S1635-64022	<78286> ..FLANGE,INPUT,TRANSMISSION..		EA		1	*	*	*		*	158	62
P	F		5330-474-8899	63X1258	<73680> ..OIL SEAL.....		EA		1	*	*	*		*	158	63
P	F		5330-066-2781	D65X1258	<73680> ..SEAL,PLAIN,ENCASED.....		EA		1	*	*	*		*	158	
P	D		3110-624-3491	SB3153A1	<78286> ..CONE AND ROLLERS,TAPERED... ROLLER BEARING		EA		1					*	158	64
P	D		3110-624-3490	SB3153B1	<78286> ..CUP,TAPERED ROLLER BEARING.		EA		1					100	158	65
P	D		1560-336-1160	S1635-64007-1	<78286> ..HOUSING ASSEMBLY,INPUT..... TAIL ROTOR GEAR BOX RPLS-- 1560-307-3654		EA		1					*	158	66
P	D		1615-209-2411	S1635-64047	<78286> ...RETAINER,OIL SEAL.....		EA		1					*	158	67
			1560-307-3664	S1635-64051	<78286> .SHIM,TRANSMISSION SYSTEM.... ISSUE UNTIL EXHAUSTED,THEN REQUISITION COMPLETE KIT 1560-715-2258 FOR REPLACEMENT PARTS		EA		1						158	68
P	F		5310-575-6461	S1635-64071	<78286> .NUT,PLAIN,ROUND.....		EA		1	2	2	4		*	158	69
			5310-639-1954	MS172289	<96906> .WASHER,KEY.....		EA		1	*	*	*		*	158	70
P	D		1615-591-6667	S1635-64073	<78286> .SPACER,TAIL ROTOR GEAR BOX..		EA		1					*	158	71
AD	D			S1635-64004-1	<78286> .HOUSING AND HORN ASSEMBLY... OUTBOARD ATTACHING PARTS		EA		1						158	72
			5310-167-0820	AN960-516	<88044> .WASHER,FLAT.....		HD		12					*	158	
			5310-088-0553	MS21044N5	<96906> .NUT,SELF-LOCKING,HEXAGON.... ---*---		HD		12					*	158	73
P	F		5330-855-7783	21708-1471	<73680> ..SEAL,PLAIN,ENCASED.....		EA		1	REF	REF	REF		REF	158	74

(1) SOURCE, MAINT AND REC CODE (a) SOURCE CODE	(b) MAINT LEVEL	(c) REC CODE	(2) FEDERAL STOCK NUMBER	REFERENCE NUMBER	(3) DESCRIPTION	MODELS USABLE ON CH-34C	(4) UNIT OF ISSUE	(5) QTY INC IN UNIT PACK	(6) QTY INC IN UNIT	(7) 30-DAY DS GS MAINT ALW (a) 1-20	(b) 21-50	(c) 51-100	(8) 1-YR ALW PER 100 EQUIP CNTGCY	(9) DEPOT MAINT ALW PER 100 EQUIP	(10) ILLUSTRATION (a) FIG NO	(b) ITEM NO
					CONTINUED										158	74
					RPLS-- 5330-474-8539											
			3110-275-0112	RM9310KMBR <21335>	..BEARING,BALL,ANNULAR.....		EA								158	
					RPL-BY 3110-624-3623											
P	D	U	3110-624-3623	SB1055-1 <78286>	..BEARING,BALL,ANNULAR.....		EA		1					100	158	75
					RPLS-- 3110-275-0112											
P	D		1560-307-3653	S1635-64005 <78286>	..HORN ASSEMBLY.....		EA		1					*	158	76
					ATTACHING PARTS											
			5310-167-0820	AN960-516 <88044>	..WASHER,FLAT.....		HD		8					*	158	
			5310-088-0553	MS21044N5 <96906>	..NUT,SELF-LOCKING,HEXAGON...		HD		8					*	158	77
					---*---											
P	D		1560-307-3655	S1635-64012 <78286>	...LINER,TRANSMISSION SYSTEM.		EA		1					*	158	78
			1560-698-5449	S1635-64045 <78286>	..GASKET.....NOTE 1		EA		1						158	80
				S1635-64003-1 <78286>	..HOUSING AND GEAR.....		EA		1						158	81
					ASSEMBLY,OUTBOARD											
P	D		1615-286-9597	S1635-64027 <78286>	...WASHER,FLAT.....		EA		1					*	158	84
P	D		3110-624-3504	SB3252A1 <78286>	...CONE AND ROLLERS,TAPERED..		EA		1					100	158	85
					ROLLER BEARING											
X1	D			39250 <08162>	...CONE AND ROLLERS,TAPERED..		EA		1						158	
					ROLLER BEARING											
P	D		3110-624-3505	SB3252B1 <78286>	...CUP,TAPERED ROLLER.....		EA		1					*	158	86
X1	D			39412 <08162>	...CUP,TAPERED ROLLER BEARING		EA		1						158	
P	D		3110-624-3501	SB3207A1 <78286>	...CONE AND ROLLERS,TAPERED..		EA		1					100	158	87
					ROLLER BEARING											
P	D		3110-624-3500	SB3207B1 <78286>	...CUP,TAPERED ROLLER BEARING		EA		1					*	158	88
P	D		1560-571-1547	S1635-64006-1 <78286>	...HOUSING ASSEMBLY,.....		EA		1					*	158	89
					TRANSMISSION											
			1615-098-8284	S1635-64016 <78286>	...GEAR BOX ASSEMBLY.....										158	
					RPL-BY 1560-564-1512											
P	D		1560-564-1512	S1635-64016-3 <78286>	...GEAR BOX ASSEMBLY.....		EA		1					*	158	90
					RPLS-- 1615-098-8284											
P	D		1560-662-7930	S1635-64044 <78286>	....BEARING,SLEEVE.....		EA		1					*	158	91
			5315-234-7465	MS16562-220 <96906>	....PIN,SPRING.....		EA		3					*	158	92
P	D		1560-662-7482	S1635-64025 <78286>	....BEARING,SLEEVE.....		EA		1					*	158	93
P	D		1615-701-4158	S1635-64016-1 <78286>	....GEAR,OUTPUT.....		EA		1					*	158	94
			1560-307-3662	S1635-64046 <78286>	.SHIM,TRANSMISSION GEAR BOX..		EA		1						158	95
					NOTE 1											
P	D		1560-330-6186	S1635-64002-1 <78286>	.HOUSING ASSEMBLY,TAIL.....		EA		1					*	158	96
					ROTOR GEAR BOX											
					INTERMEDIATE RPLS--											
					1560-307-3652											
P	D		1560-098-8283	S1635-64008 <78286>	..LINER,GEAR BOX HOUSING.....		EA		2					*	158	97
P	D		1560-983-2485	RL72SB8 <05683>	..LOCKING,TAIL ROTOR GEAR....		EA		1					*	158	
P	D		5307-981-8779	SF101-9SA16A <78286>	..STUD RPLS-- 5307-025-8287		EA		8					*	158	
P	D		1560-715-2259	S1607-3601-2 <78286>	PARTS KIT,TAIL ROTOR GEAR....		EA		1					*	158	
					BOX-<CURE DATE> U/O											
					1615-587-6385 SEE											
					FUNCTIONAL GROUP 50											
P	D		1560-715-2258	S1607-3601-1 <78286>	PARTS KIT,TAIL ROTOR GEAR....		EA		1					*	158	
					BOX-OVERHAUL											
					U/O 1615-587-6385 SEE											
					FUNCTIONAL GROUP 50											

(1) SOURCE, MAINT AND REC CODE (a) SOURCE CODE	(b) MAINT LEVEL	(c) REC CODE	(2) FEDERAL STOCK NUMBER	REFERENCE NUMBER	(3) DESCRIPTION	MODELS USABLE ON CH-34C	(4) UNIT OF ISSUE	(5) QTY INC IN UNIT PACK	(6) QTY INC IN UNIT	(7) 30-DAY DS/GS MAINT ALW (a) 1-20	(b) 21-50	(c) 51-100	(8) 1-YR ALW PER 100 EQUIP CNTGCY	(9) DEPC. MAINT ALW PER 100 EQUIP	(a) FIG NO	(b) ITEM NO
					CONTINUED FOR COMPONENTS NOTE 1 COMPONENT OF KIT 1560-715-2258										158	
				S1640-64000 <78286>	PYLON DIRECTIONAL CONTROLS... INSTALLATION SEE FIG.154 FOR NHA										159	
P	F		1560-334-6411	S1640-64009-1 <78286>	.ROD ASSEMBLY,FLIGHT CONTROLS ATTACHING PARTS		EA		1	*	2	2		*	159	1
			5306-207-2321	NAS464P4A18 <80205>	.BOLT,SHEAR.....		EA		1	*	*	*		*	159	2
			5310-187-2354	AN960PD416 <88044>	.WASHER,FLAT.....		HD		2	*	*	*		*	159	
			5310-543-4443	MS20364-428A <96906>	.NUT,SELF-LOCKING,HEXAGON....		HD		1	*	*	*		*	159	
					---*---											
			5310-167-1300	AN316-6R <88044>	..NUT,PLAIN,HEXAGON.....		HD		1	*	*	*		*	159	3
P	F		3110-516-5763	REP4M6FS210 <21335>	..BEARING,BALL,ROD END..... OBSLTS 3110-839-3976		EA		1	*	*	*		REF	159	4
P	F		1560-563-9953	S1640-61157-4 <78286>	.ROD ASSEMBLY,FLIGHT CONTROLS ATTACHING PARTS		EA		1	*	*	*		*	159	5
			5306-206-6370	NAS464-4-18 <80205>	.BOLT,SHEAR.....		EA		1	*	*	*		*	159	6
			5310-187-2354	AN960PD416 <88044>	.WASHER,FLAT.....		HD		2	*	*	*		*	159	
			5310-176-8108	AN320-4 <88044>	.NUT,SLOTTED,HEXAGON.....		HD		1	*	*	*		*	159	
			5315-234-1851	MS24665-24 <96906>	.PIN,COTTER.....				1	*	*	*		*	159	
			5306-207-2321	NAS464P4A18 <80205>	.BOLT,SHEAR.....		EA		1	*	*	*		*	159	7
			5310-187-2354	AN960PD416 <88044>	.WASHER,FLAT.....		HD		2	*	*	*		*	159	
			5310-543-4443	MS20364-428A <96906>	.NUT,SELF-LOCKING,HEXAGON....		HD		1	*	*	*		*	159	
					---*---											
			5310-167-1300	AN316-6R <88044>	..NUT,PLAIN,HEXAGON.....		HD		1	*	*	*		*	159	8
P	F		3110-516-5763	REP4M6FS210 <21335>	..BEARING,BALL,ROD END..... OBSLTS 3110-839-3976		EA		1	*	*	*		REF	159	9
			1560-334-6408	S1640-64004 <78286>	.IDLER ASSEMBLY,PYLON..... DIRECTION CONTROLS RPL-BY 1560-611-7269										159	
P	F		1560-611-7269	S1640-64004-1 <78286>	.IDLER ASSEMBLY,PYLON..... DIRECTIONAL CONTROLS RPLS-- 1560-334-6408 ATTACHING PARTS		EA		1	*	2	2		*	159	10
			5306-631-3923	NAS501-4-17A <80205>	.BOLT,MACHINE.....		EA		1	*	*	*		*	159	11
			5310-187-2354	AN960PD416 <88044>	.WASHER,FLAT.....		HD		1	*	*	*		*	159	
					---*---											
P	F		3110-926-4655	DW4K <21335>	..BEARING,BALL,AIRFRAME.....		EA		1	REF	REF	REF	REF	REF	159	12
P	F		1560-315-5894	S1640-61157-5 <78286>	.ROD ASSEMBLY,FLIGHT..... CONTROLS RPLS-- 1560-334-6410 ATTACHING PARTS		EA		1	*	*	*		*	159	13
			5306-206-6370	NAS464-4-18 <80205>	.BOLT,SHEAR.....		EA		2	*	*	*		*	159	14

(1) SOURCE, MAINT AND REC CODE (a) SOURCE CODE	(b) MAINT LEVEL	(c) REC CODE	(2) FEDERAL STOCK NUMBER	REFERENCE NUMBER		(3) DESCRIPTION	MODELS USABLE ON CH-34C	(4) UNIT OF ISSUE	(5) QTY INC IN UNIT PACK	(6) QTY INC IN UNIT	(7) 30-DAY DS GS MAINT ALW (a) 1-20	(b) 21-50	(c) 51-100	(8) 1-YR ALW PER 100 EQUIP CNTGCY	(9) DEPOT MAINT ALW PER 100 EQUIP	(10) ILLUSTRATION (a) FIG NO	(b) ITEM NO
			5310-187-2354	AN960PD416	<88044>	.WASHER,FLAT.....		HD		4	*	*	*		*	159	
			5310-176-8108	AN320-4	<88044>	.NUT,SLOTTED,HEXAGON.....		HD		2	*	*	*		*	159	
			5315-234-1856	MS24665-155	<96906>	.PIN,COTTER.....		HD		2	*	*	*		*	159	
						---*---											
			5310-167-1300	AN316-6R	<88044>	..NUT,PLAIN,HEXAGON.....		HD		1	*	*	*		*	159	15
P	F		3110-516-5763	REP4M6FS210	<21335>	..BEARING,BALL,ROD END.....		EA		1	*	*	*		REF	159	16
						OBSLTS 3110-839-3976											
				S1640-64001	<78286>	.BELL CRANK INSTALLATION.....				1						159	
P	F		1560-606-7526	S1640-64002-1	<78286>	..BELL CRANK ASSEMBLY,PYLON..		EA		1	*	2	2		*	159	17
						DIRECTIONAL CONTROLS											
						RPLS-- 1560-334-6407											
						ATTACHING PARTS											
			5306-639-2517	NAS464-5-35	<80205>	..BOLT,SHEAR.....		EA		1	*	*	*		*	159	18
			5310-187-2399	AN960PD516	<88044>	..WASHER,FLAT.....		HD		2	*	*	*		*	159	
			5310-176-8109	AN320-5	<88044>	..NUT,SLOTTED,HEXAGON.....		HD		1	*	*	*		*	159	
			5315-234-1856	MS24665-155	<96906>	..PIN,COTTER.....		HD		1	*	*	*		*	159	
						---*---											
P	F		3110-158-6298	DW5	<21335>	...BEARING,BALL,AIRFRAME.....		EA		1	*	REF	REF		REF	159	19
			1560-091-4151	S1640-64003	<78286>	..BRACKET ASSEMBLY RPL-BY...		EA			*	*	*			159	
						1560-606-7528											
			1560-334-6417	S1640-64017-1	<78286>	..BRACKET ASSEMBLY RPL-BY...										159	
						1560-606-7528											
P	F		1560-606-7528	S1640-64017-7	<78286>	..BRACKET ASSEMBLY,FLIGHT....		EA		1	*	*	2		*	159	20
						CONTROLS RPLS--											
						1560-091-4151,											
						1560-334-6417											
						ATTACHING PARTS											
			5306-182-2060	AN3H7A	<88044>	..BOLT,MACHINE.....		HD		1	*	*	*		*	159	21
			5310-183-4406	AN960PD10	<88044>	..WASHER,FLAT.....		HD		1	*	*	*		*	159	
			5306-182-2064	AN3H13A	<88044>	..BOLT,MACHINE.....		HD		2	*	*	*		*	159	22
			5310-183-4406	AN960PD10	<88044>	..WASHER,FLAT.....		HD		2	*	*	*		*	159	
						---*---											
				SS4006-5-68	<78286>	...BUSHING,SLEEVE.....		EA		1						159	23
MF	F			S1640-64001-2	<78286>	..SHIM.....		EA		1						159	24
						MAKEFR											
						AR 9535-554-1418 AL ALLY SH											
				S1640-64001-1	<78286>	..SHIM.....		EA		1						159	25
			1560-336-7959	S1640-64017-2	<78286>	..BRACKET ASSEMBLY RPL-BY...										159	
						1560-606-7527											
P	F		1560-606-7527	S1640-64017-8	<78286>	..BRACKET ASSEMBLY,PYLON.....		EA		1	*	*	*		*	159	26
						DIRECTIONAL CONTROLS											
						RPLS-- 1560-336-7959											
						ATTACHING PARTS											
			5306-182-2060	AN3H7A	<88044>	..BOLT,MACHINE.....		HD		1	*	*	*		*	159	27
			5310-183-4406	AN960PD10	<88044>	..WASHER,FLAT.....		HD		1	*	*	*		*	159	
			5306-182-2064	AN3H13A	<88044>	..BOLT,MACHINE.....		HD		2	*	*	*		*	159	28
			5310-183-4406	AN960PD10	<88044>	..WASHER,FLAT.....		HD		2	*	*	*		*	159	
						---*---											
MF	F			S1640-64001-2	<78286>	..SHIM.....		EA		1						159	29
						MAKEFR											
						AR 9535-554-1418 AL ALLY SH											
				S1640-64001-1	<78286>	..SHIM.....		EA		1						159	30

(1) SOURCE, MAINT AND REC CODE (a) SOURCE CODE	(b) MAINT LEVEL	(c) REC CODE	(2) FEDERAL STOCK NUMBER	REFERENCE NUMBER		(3) DESCRIPTION	MODELS USABLE ON CH-34C	(4) UNIT OF ISSUE	(5) QTY INC IN UNIT PACK	(6) QTY INC IN UNIT	(7) 30-DAY DS/GS MAINT ALW (a) 1-20	(b) 21-50	(c) 51-100	(8) 1-YR ALWPER 100 EQUIP CNTGCY	(9) DEPOT MAINT ALWPER 100 EQUIP	(10) ILLUSTRATION (a) FIG NO	(b) ITEM NO
			1560-334-6410	S1640-64007-1	<78286>	.ROD ASSEMBLY..... RPL-BY 1560-070-7833										159	
P	F		1560-070-7833	S1640-64007-2	<78286>	.ROD ASSEMBLY..... RPLS-- 1560-334-6410 ATTACHING PARTS		EA		1	*	2	2		*	159	31
			5306-206-6370	NAS464-4-18	<80205>	.BOLT,SHEAR.....		EA		2	*	*	*		*	159	32
			5310-187-2354	AN960PD416	<88044>	.WASHER,FLAT.....		HD		4	*	*	*		*	159	
			5310-176-8108	AN320-4	<88044>	.NUT,SLOTTED,HEXAGON.....		HD		2	*	*	*		*	159	
			5315-234-1856	MS24665-155	<96906>	.PIN,COTTER..... ---*---		HD		2	*	*	*		*	159	
			5310-167-1300	AN316-6R	<88044>	..NUT,PLAIN,HEXAGON.....		HD		1	*	*	*		*	159	33
P	F		3110-516-5763	REP4M6FS210	<21335>	..BEARING,BALL,ROD END..... OBSLTS 3110-839-3970		EA		1	*	*	*		REF	159	34
			1560-334-6409	S1640-64005	<78286>	.IDLER ASSEMBLY,PYLON..... DIRECTIONAL CONTROLS RPL-BY 1615-611-7268										159	
P	F		1615-611-7268	S1640-64005-1	<78286>	.IDLER ASSEMBLY,PYLON..... DIRECTIONAL CONTROLS RPLS-- 1560-334-6409 ATTACHING PARTS		EA		1	*	2	2		*	159	35
			5306-207-1067	NAS464-4-35	<80205>	.BOLT,SHEAR.....		EA		1	*	*	*		*	159	36
			5310-187-2354	AN960PD416	<88044>	.WASHER,FLAT.....		HD		2	*	*	*		*	159	
			5310-176-8108	AN320-4	<88044>	.NUT,SLOTTED,HEXAGON.....		HD		1	*	*	*		*	159	
			5315-234-1856	MS24665-155	<96906>	.PIN,COTTER..... ---*---		HD		1	*	*	*		*	159	
P	F		3110-926-4655	DW4K	<21335>	..BEARING,BALL,AIRFRAME.....		EA		1	REF	REF	REF	REF	REF	159	37
P	F		5340-639-0648	S1640-64018	<78286>	.SHIM.....		EA		AR	*	*	*		*	159	38
				S1620-64117	<78286>	STABILIZER ASSEMBLY AND..... INSTALLATION SEE FIG.154 FOR NHA										160	
P	F		5340-336-2530	S1620-64154	<78286>	.TURNBUCKLE ASSEMBLY..... ATTACHING PARTS		EA		1	*	2	2		*	160	1
			5306-144-3849	AN25-13	<88044>	.BOLT,CLEVIS.....		EA		2	*	*	*		*	160	2
			5310-184-8980	AN960PD516L	<88044>	.WASHER,FLAT.....		HD		6	*	*	*		*	160	
			5310-176-8109	AN320-5	<88044>	.NUT,SLOTTED,HEXAGON.....		HD		2	*	*	*		*	160	
			5315-234-1856	MS24665-155	<96906>	.PIN,COTTER..... ---*---		HD		2	*	*	*		*	160	
			5310-638-9630	AN316C4L	<88044>	..NUT,PLAIN,HEXAGON.....		EA		1	*	*	*		*	160	3
P	F		5340-521-6236	S1620-64154-5	<78286>	..FORK,PYLON SECTION.....		EA		1	*	*	*		*	160	4
			5310-638-9630	AN316C4L	<88044>	..NUT,PLAIN,HEXAGON.....		EA		1	*	*	*		*	160	5
P	F		5340-523-0924	S1620-64154-4	<78286>	..CLEVIS,ROD END.....		EA		1	*	*	*		*	160	6
P	F		1560-336-0774	S1620-64117-1	<78286>	.STABILIZER ASSEMBLY,PYLON... SECTION ATTACHING PARTS		EA		1	*	2	2		*	160	7
			5306-144-3849	AN25-13	<88044>	.BOLT,CLEVIS.....		EA		2	*	*	*		*	160	8
			5310-184-8980	AN960PD516L	<88044>	.WASHER,FLAT.....		HD		6	*	*	*		*	160	

(1) SOURCE, MAINT AND REC CODE (a) SOURCE CODE	(b) MAINT LEVEL	(c) REC CODE	(2) FEDERAL STOCK NUMBER	REFERENCE NUMBER		(3) DESCRIPTION	MODELS USABLE ON CH-34C	(4) UNIT OF ISSUE	(5) QTY INC IN UNIT PACK	(6) QTY INC IN UNIT	(7) 30-DAY DS GS MAINT ALW (a) 1-20	(b) 21-50	(c) 51-100	(8) 1-YR ALW PER 100 EQUIP CNTGCY	(9) DEPOT MAINT ALW PER 100 EQUIP	(10) ILLUSTRATION (a) FIG NO	(b) ITEM NO
			5310-176-8109	AN320-5	<88044>	.NUT,SLOTTED,HEXAGON.....		HD		2	*	*	*		*	160	
			5315-234-1856	MS24665-155	<96906>	.PIN,COTTER.....		HD		2	*	*	*		*	160	
						---*---											
P	F		1560-570-4859	S1620-64120	<78286>	..FITTING,HINGE,PYLON SECTION ATTACHING PARTS		EA		1	*	*	*		*	160	9
			5320-243-3953	P5H	<29666>	..RIVET.....		EA		4	*	*	*			160	10
				S1620-64117-7	<78286>	..PYLON SECTION STABILIZER... FILLER		EA		2						160	11
P	F		1560-336-0776	S1620-64152	<78286>	..FITTING,STABILIZER HINGE... ATTACHING PARTS		EA		2	*	*	*		*	160	12
			5320-286-4704	CKLP5K	<29666>	..RIVET.....		EA		6	*	*	*			160	13
				MS20470AD5	<96906>	..RIVET.....		EA		4						160	
						---*---											
MH	H			AN7510-1	<88044>	..PLATE,IDENTIFICATION..... MAKEFR AR 9535-167-2219 AL ALLY SH ATTACHING PARTS		EA		1						160	14
			5320-167-4943	P4B	<29666>	..RIVET.....		EA		4	*	*	*		*	160	15
						---*---											
X2	F			S1620-64158	<78286>	..FAIRING ASSEMBLY-UPPER..... SECTION ATTACHING PARTS		EA		1						160	16
				MS20470B4	<96906>	..RIVET,SOLID.....		EA		21						160	17
						---*---											
				S1620-64147-2	<78286>	..PYLON SECTION STABILIZER... FILLER ATTACHING PARTS		EA		2						160	18
			5320-243-3955	100V5H	<29666>	..RIVET.....		EA		4	*	*	*			160	19
						---*---											
X2	F			S1620-64159	<78286>	..FAIRING ASSEMBLY-LOWER..... SECTION ATTACHING PARTS		EA		1						160	20
				MS20470B4	<96906>	..RIVET,SOLID.....		EA		22						160	21
						---*---											
				S1620-64147-2	<78286>	..PYLON SECTION STABILIZER... FILLER ATTACHING PARTS		EA		2						160	22
			5320-286-4704	CKLP5K	<29666>	..RIVET.....		EA		4	*	*	*			160	23
						---*---											
P	F		1560-327-3863	S1620-64162-2	<78286>	..TIP,PYLON SECTION..... STABILIZER ATTACHING PARTS		EA		2	*	2	2		*	160	24
			5305-180-0010	AN525-10R8	<88044>	..SCREW,MACHINE.....		HD		4	*	*	*		*	160	25
			5305-180-0010	AN525-10R8	<88044>	..SCREW,MACHINE.....		HD		1	*	*	*		*	160	26
			5310-167-0812	AN960C10L	<88044>	..WASHER,FLAT.....		HD		1	*	*	*		*	160	
			5310-877-5797	MS21044N3	<96906>	..NUT,SELF-LOCKING,HEXAGON...		EA		1	*	*	*		*	160	
						---*---											
P	F		1560-327-3862	S1620-64162-1	<78286>	..TIP,PYLON SECTION..... STABILIZER ATTACHING PARTS		EA		2	*	2	2		*	160	27
P	F		5320-119-5548	P5D	<29666>	..RIVET,BLIND.....		EA		2	*	*	*		REF	160	28
P	F		5320-119-5549	P5E	<29666>	..RIVET,BLIND.....		EA		2	*	*	*		*	160	

(1) SOURCE, MAINT AND REC CODE (a) SOURCE CODE	(b) MAINT LEVEL	(c) REC CODE	(2) FEDERAL STOCK NUMBER	(3) DESCRIPTION REFERENCE NUMBER			MODELS USABLE ON CH-34C	(4) UNIT OF ISSUE	(5) QTY INC IN UNIT PACK	(6) QTY INC IN UNIT	(7) 30-DAY DS/GS MAINT ALW (a) 1-20	(b) 21-50	(c) 51-100	(8) 1-YR ALW PER 100 EQUIP CNTCCY	(9) DEPOT MAINT ALW PER 100 EQUIP	(10) ILLUSTRATION (a) FIG NO	(b) ITEM NO
				MS20470B4	<96906>	..RIVET,SOLID.....		EA		46						160	
						---*---											
X2	F			S1620-64161-1	<78286>	..ANGLE.....		EA		3						160	37
X2	F			S1620-64161-2	<78286>	..ANGLE.....		EA		3						160	
						ATTACHING PARTS											
				MS20470AD4	<96906>	..RIVET.....		EA		28						160	38
						---*---											
X2	F			S1620-64147-3	<78286>	..ANGLE.....		EA		3						160	39
X2	F			S1620-64147-4	<78286>	..ANGLE.....		EA		3						160	
X2	F			S1620-64163-2	<78286>	..RIB.....		EA		2						160	40
X2	F			S1620-64163-1	<78286>	..RIB.....		EA		3						160	42
X2	F			S1620-64163-2	<78286>	..RIB.....		EA		1						160	44
X2	F			S1620-64163-1	<78286>	..RIB.....		EA		1						160	46
X2	F			S1620-64163-2	<78286>	..RIB.....		EA		4						160	48
X2	F			S1620-64165-2	<78286>	..RIB.....		EA		3						160	50
X2	F			S1620-64165-1	<78286>	..RIB.....		EA		5						160	52
X2	F			S1620-64165-2	<78286>	..RIB.....		EA		2						160	54

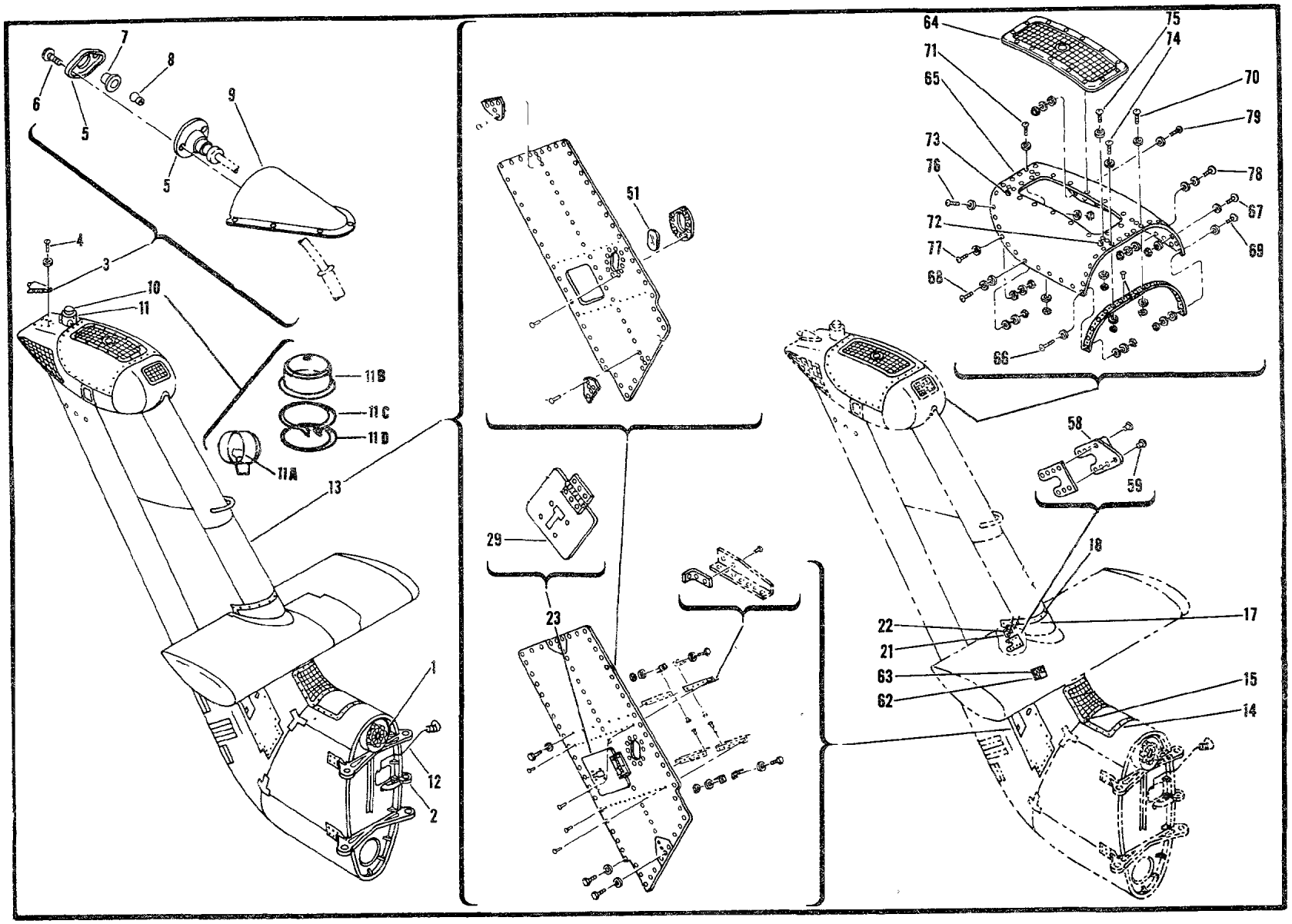

Figure 154. Pylon and Equipment (Sheet 1 of 3)

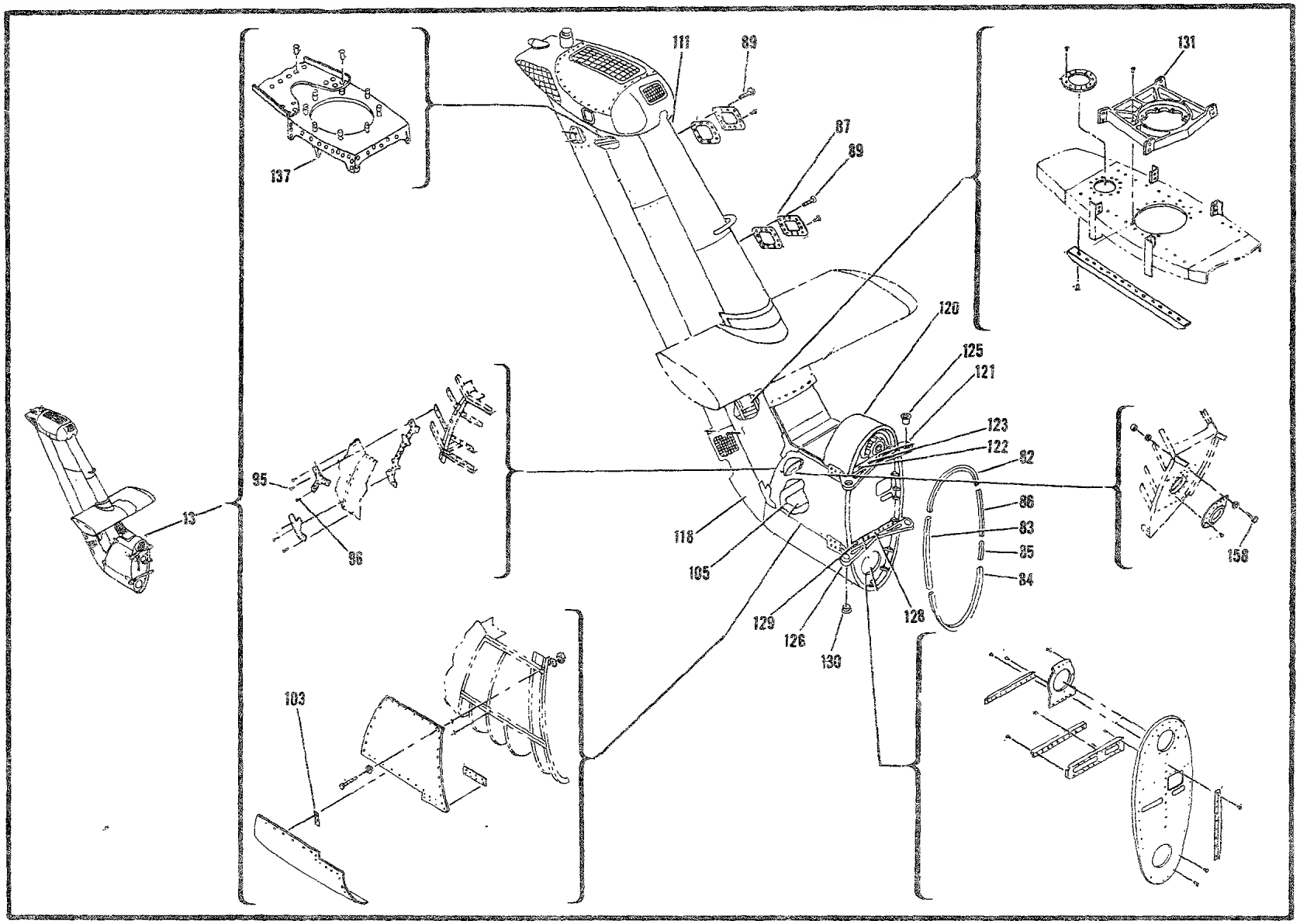

Figure 154. Pylon and Equipment (Sheet 2 of 3)

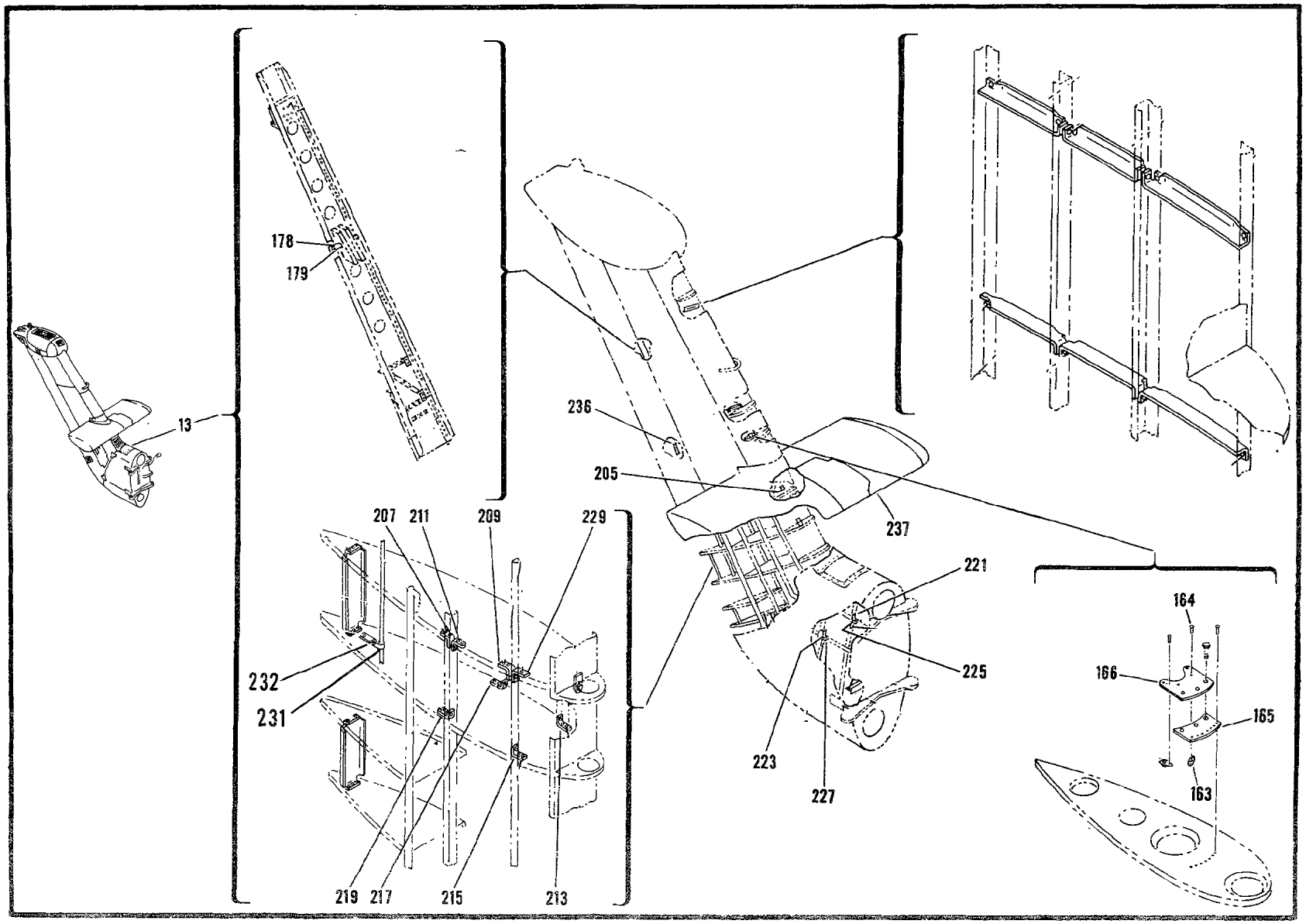

Figure 154. Pylon and Equipment (Sheet 3 of 3)

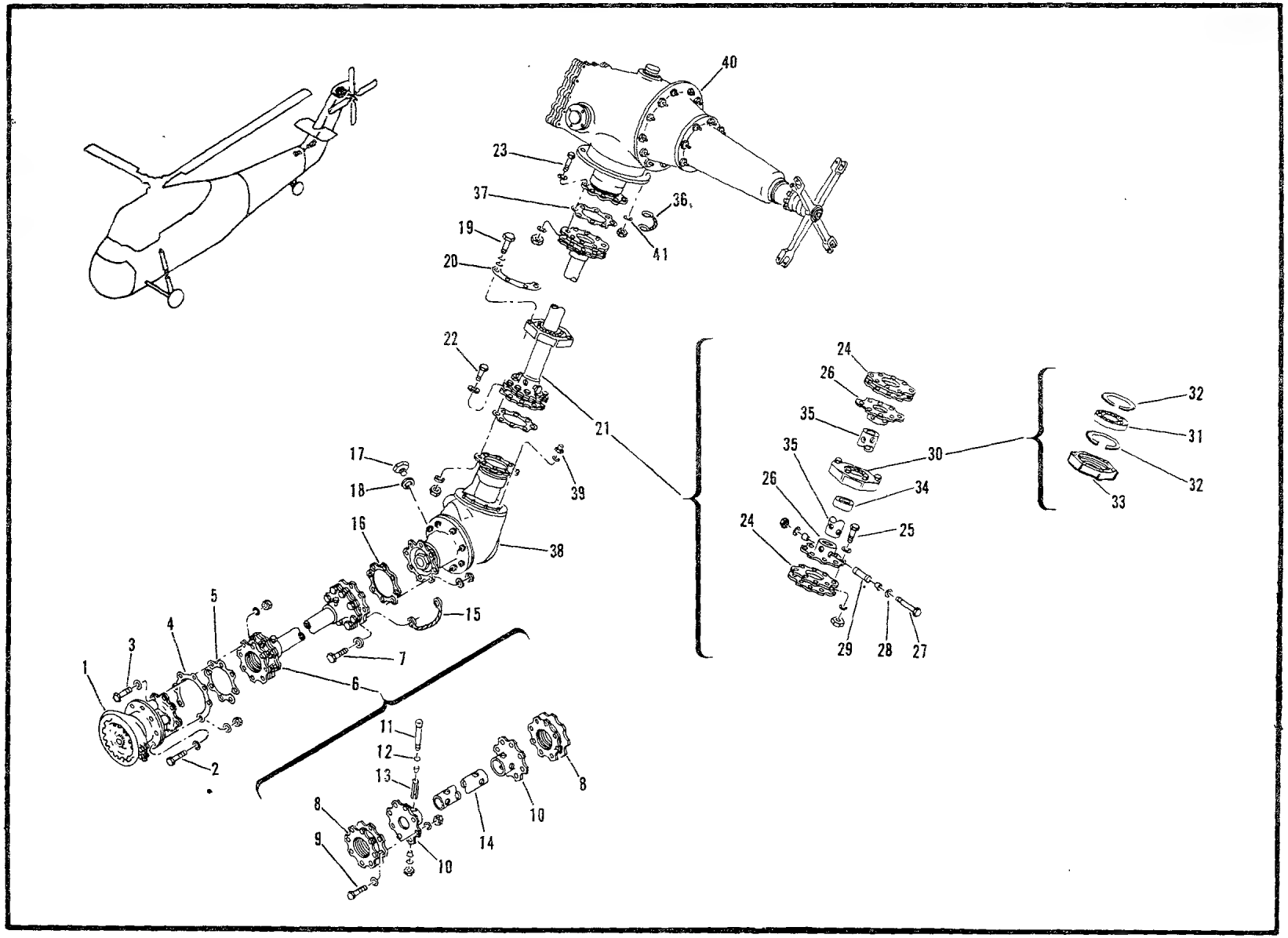

Figure 155. Pylon Transmission Installation

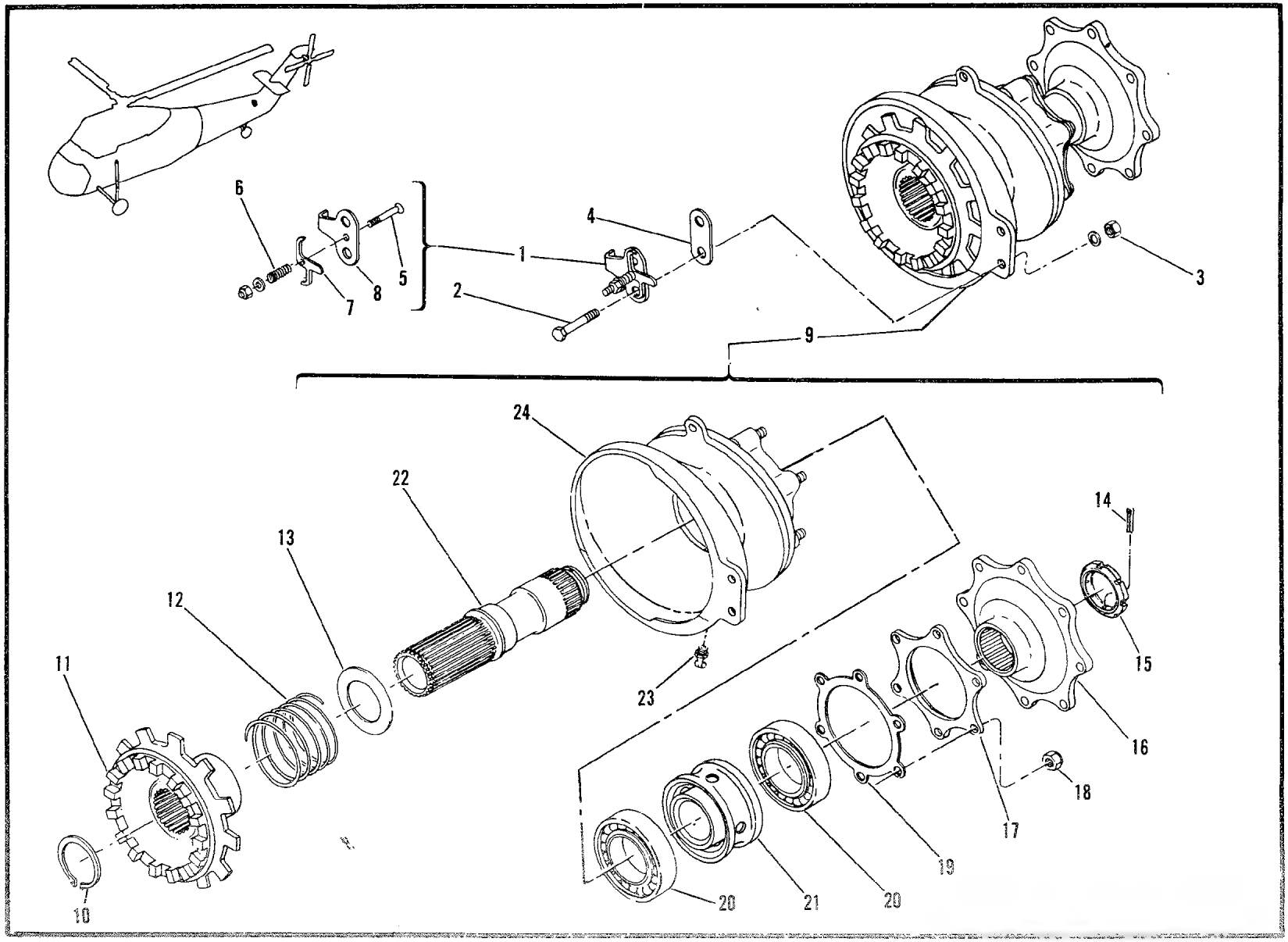

Figure 156. Coupling Assembly—Tail Rotor Drive Shaft Disconnect

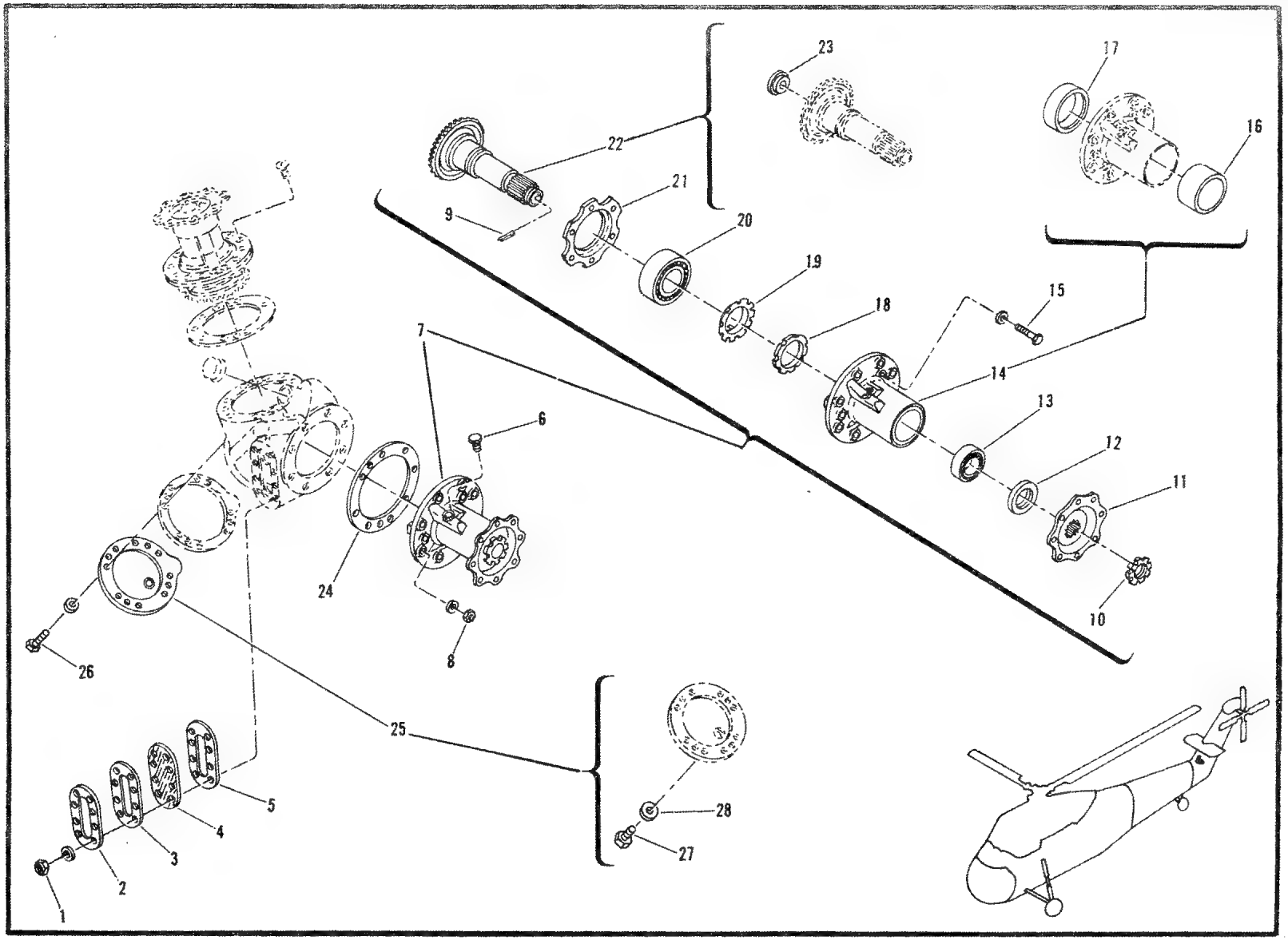

Figure 157. Gear Box Assembly, Intermediate (Sheet 1 of 2)

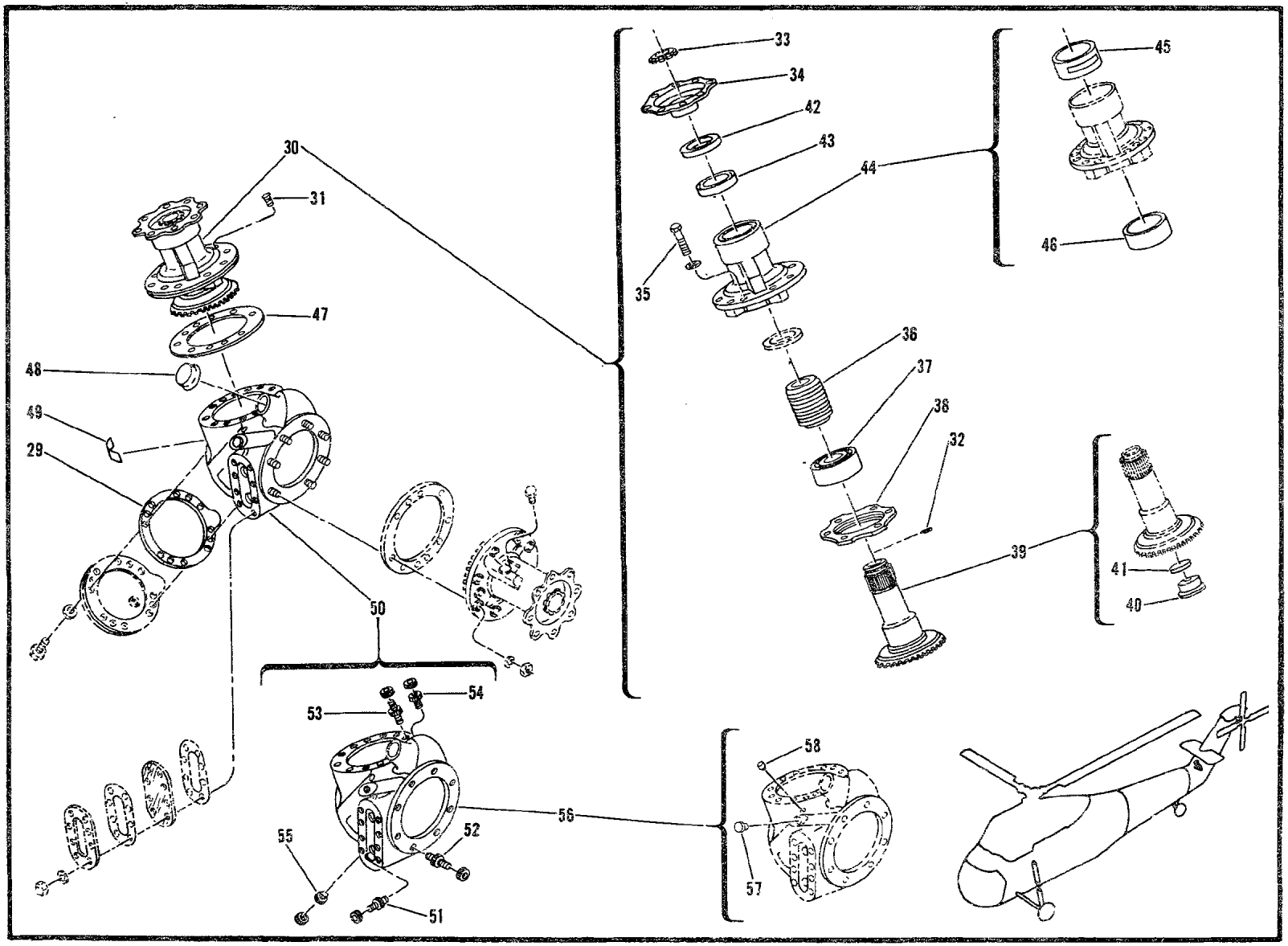

Figure 157. Gear Box Assembly, Intermediate (Sheet 2 of 2)

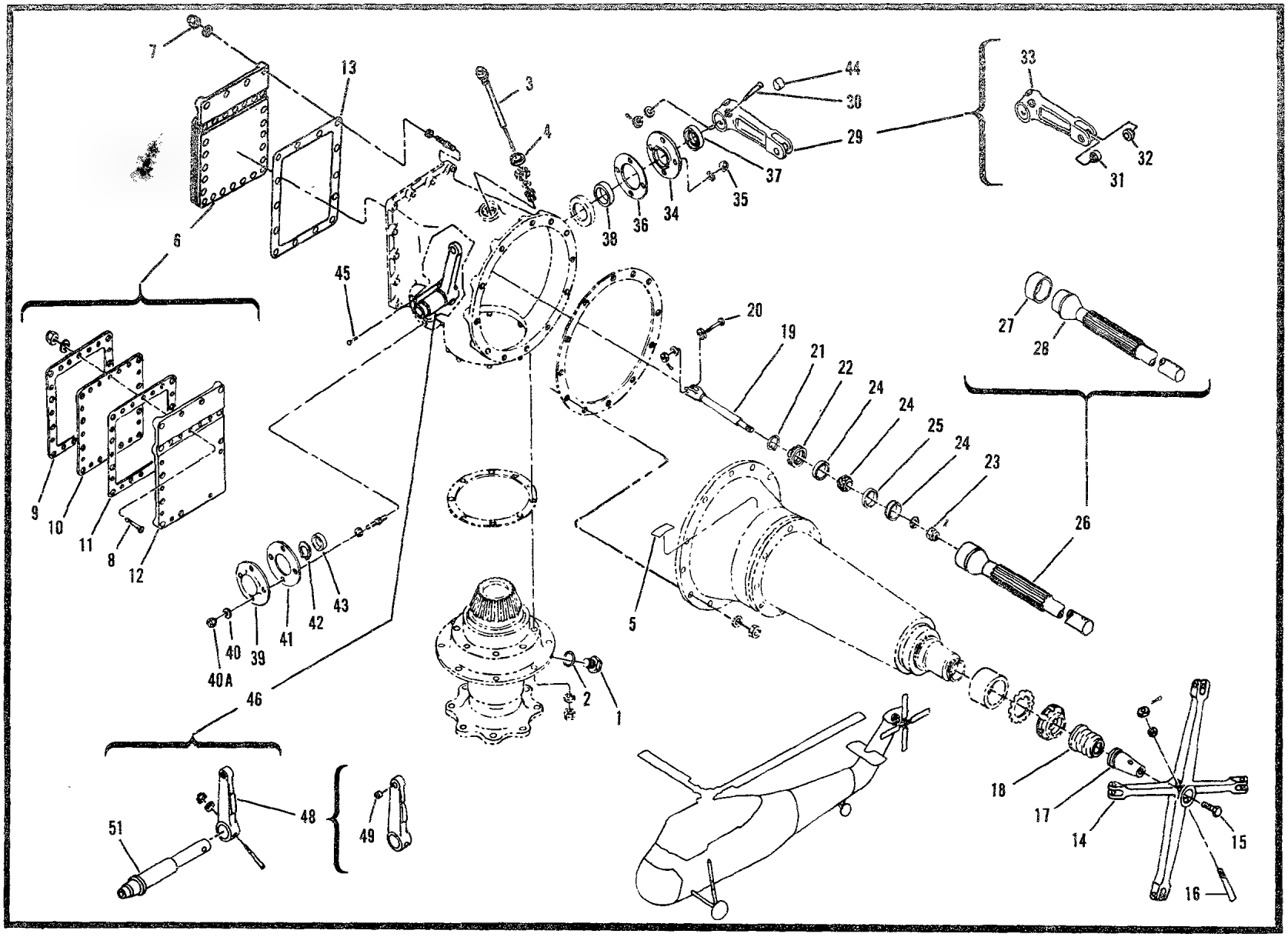

Figure 158. Gear Box Assembly-Tail Rotor (Sheet 1 of 2)

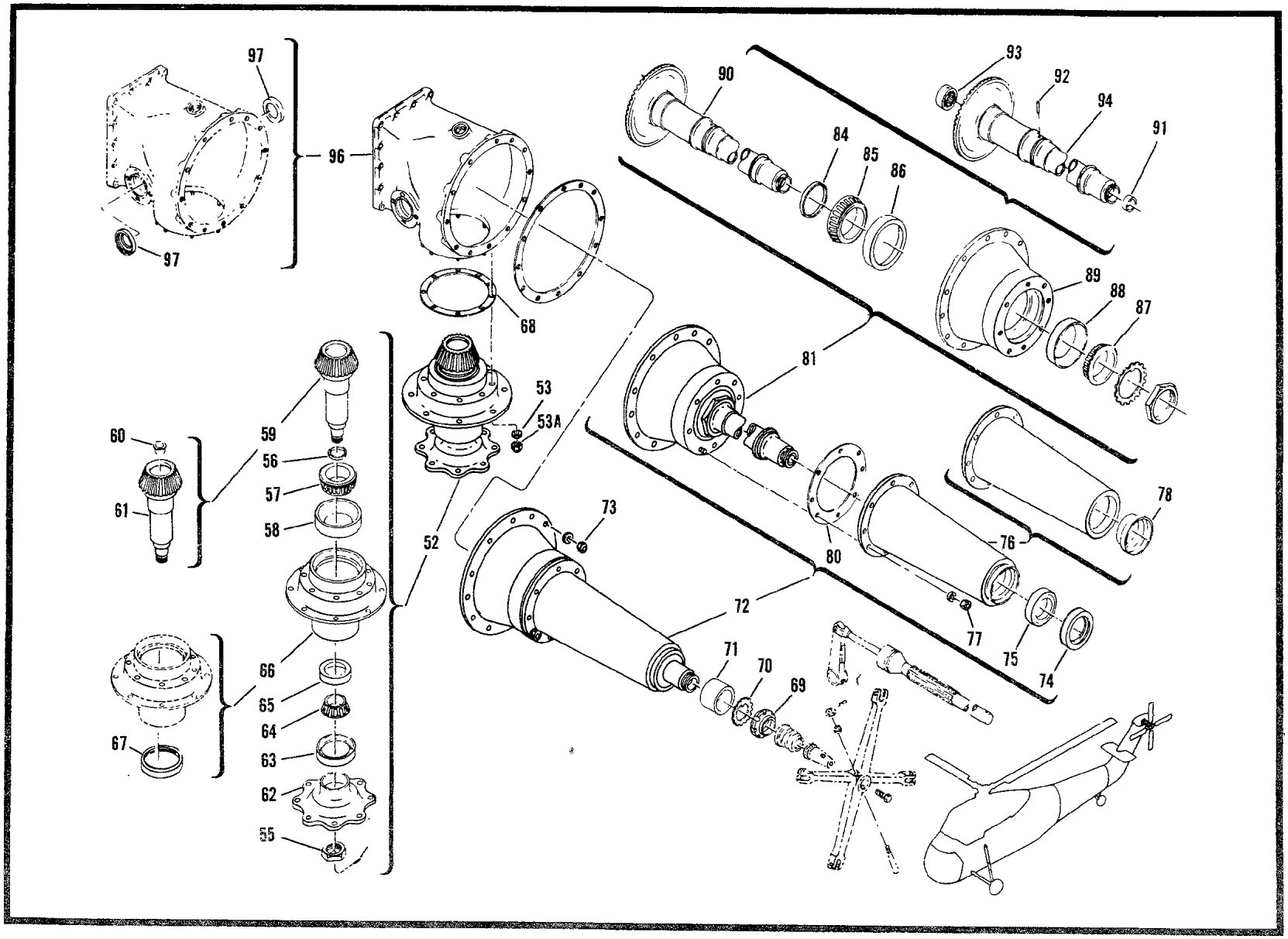

Figure 158. Gear Box Assembly Tail Rotor (Sheet 2 of 2)

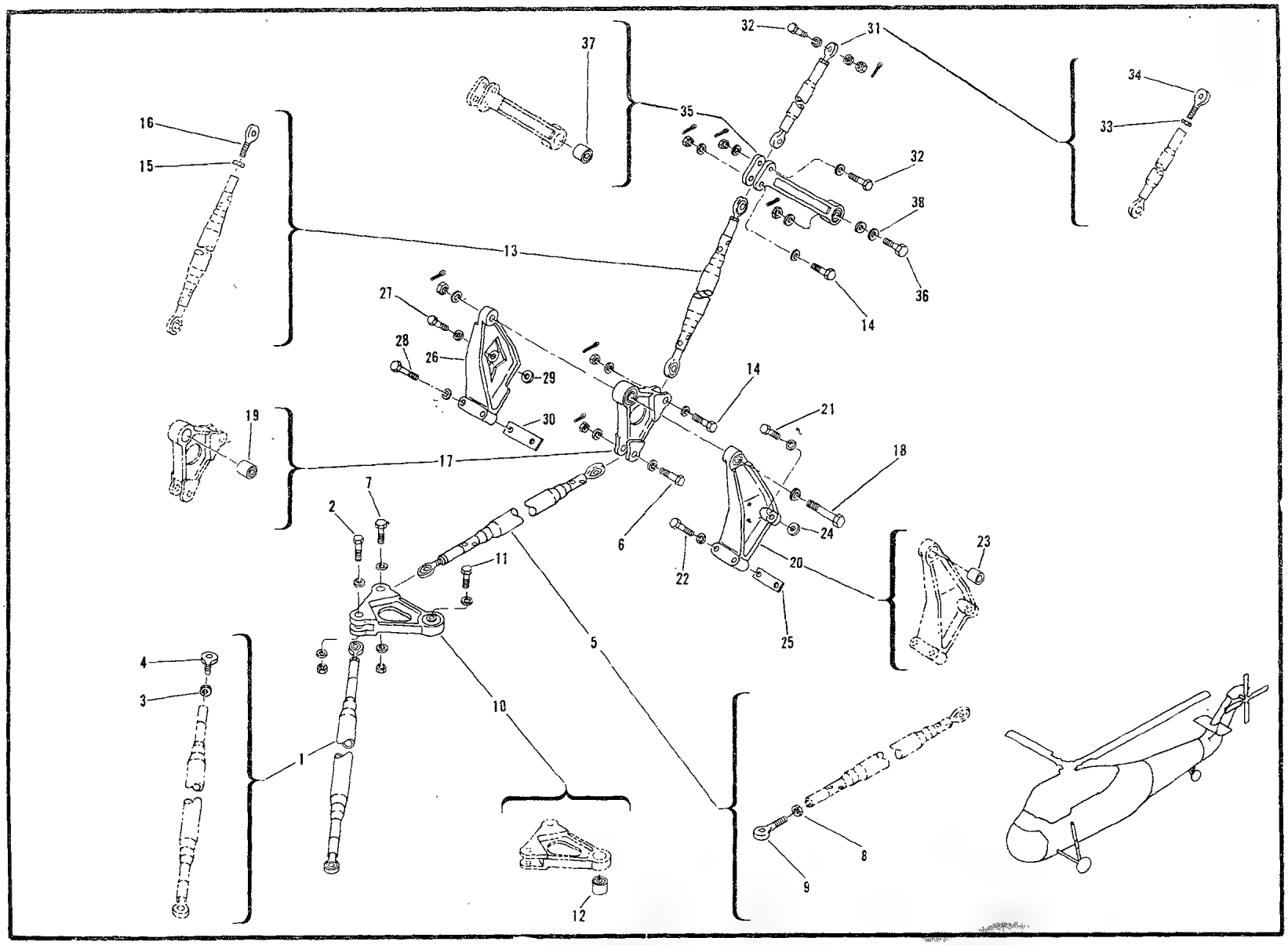

Figure 159. Pylon Directional Controls Installation

SECTION II

FUNCTIONAL GROUP 08

LANDING GEAR

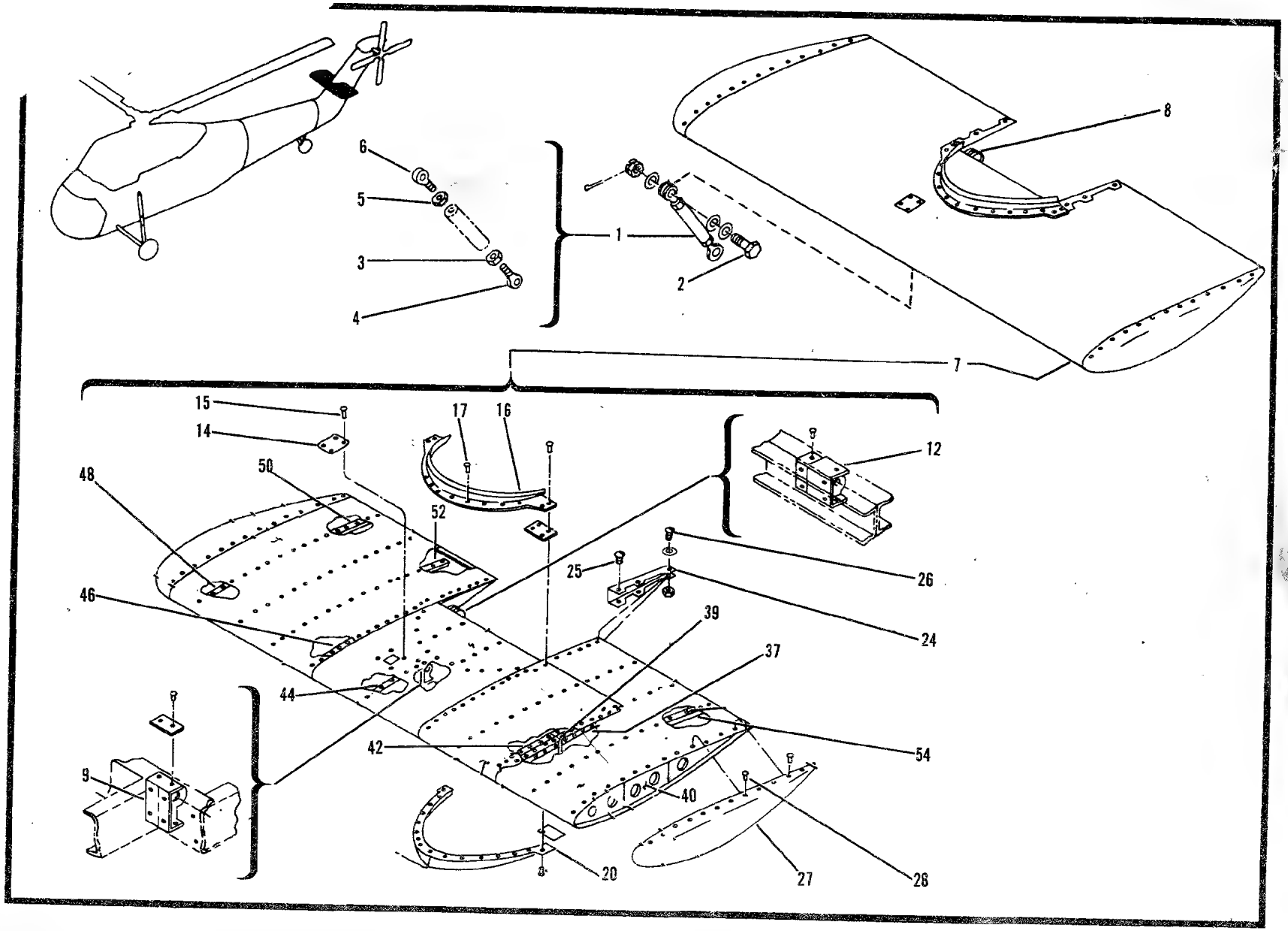

Figure 160 Stabilizer Assembly and Installation

(1) SOURCE, MAINT AND REC CODE (a) SOURCE CODE	(b) MAINT LEVEL	(c) REC CODE	(2) FEDERAL STOCK NUMBER	REFERENCE NUMBER		(3) DESCRIPTION	MODELS USABLE ON CH-34C	(4) UNIT OF ISSUE	(5) QTY INC IN UNIT PACK	(6) QTY INC IN UNIT	(7) 30-DAY DS GS MAINT ALW (a) 1-20	(b) 21-50	(c) 51-100	(8) 1-YR ALW PER 100 EQUIP CNTGCY	(9) DEPOT MAINT ALW PER 100 EQUIP	(10) ILLUSTRATION (a) FIG NO	(b) ITEM NO
				S1625-50000-3	<78286>	LANDING GEAR INSTALLATION....				1						161	
				S1625-50100-7	<78286>	.MAIN LANDING GEAR..... INSTALLATION-LH SEE FIG. 162 FOR BREAKDOWN				1						161	1
				S1625-50100-8	<78286>	.MAIN LANDING GEAR..... INSTALLATION-RH SEE FIG. 162 FOR BREAKDOWN				1						161	2
				S1625-50500-5	<78286>	.TAIL LANDING GEAR..... INSTALLATION SEE FIG.165 FOR BREAKDOWN				1						161	3
				S1625-50100-7	<78286>	MAIN LANDING GEAR..... INSTALLATION-LH SEE FIG. 161 FOR NHA										162	
				S1625-50100-8	<78286>	MAIN LANDING GEAR..... INSTALLATION-RH SEE FIG. 161 FOR NHA										162	
			4720-289-4870	MS28741-4-0540	<96906>	.HOSE ASSEMBLY,RUBBER..... RPL-BY 4720-916-2570										162	
P	O		4720-916-2570	MS2736E0540	<96906>	.HOSE ASSEMBLY,..... TETRAFLUOROETHYLENE		EA		1	*	*	*		*	162	1
MF	O			MS 8000 E 150 A	<96906>	.HOSE ASSEMBLY,..... TETRAFLUOROETHYLENE MAKEFR AR 4720-857-1732 HOSE 2 EA 4730-952-5532 NIPPLE 2 EA 4730-967-9513 SOCKET 2 EA 4730-967-9521 SLEEVE 2 EA 5340-834-8330 DUST PLUG		EA		1						162	
P	O		4730-541-8997	015501S5-4D	<00624>	.COUPLING,HALF.....		EA		1	REF	REF	REF	REF	*	162	1A
			4730-278-3682	AN939D4	<88044>	.ELBOW.....		EA		1	*	*	*		*	162	1B
			4730-684-6911	MS24392-4	<96906>	.NIPPLE,TUBE.....		EA		1	*	*	*		*	162	1C
			5330-805-2966	MS28778-4	<96906>	.PACKING,PREFORMED.....		EA		2	REF	REF	REF	REF	*	162	1D
			4730-834-9560	MS24392D4	<96906>	.NIPPLE,TUBE.....		EA		1	REF	REF	REF	REF	*	162	2
			5340-664-0652	S1625-50133-2	<78286>	.CLAMP LOOP RPL-BY..... 5340-572-8020										162	
P	O		5340-572-8020	S1625-50133-2	<78286>	.CLAMP,LOOP..... RPLS-- 5340-664-0652		EA		2	2	4	8		*	162	3
			5340-990-9299	EAB700D4	<81996>	.CLAMP,SUPPORT..... ATTACHING PARTS		EA		2	*	*	*		*	162	4
			5305-989-7435	MS35207-264	<96906>	.SCREW,MACHINE.....		HD		1	*	*	*		*	162	5
			5310-183-4406	AN960PD10	<88044>	.WASHER,FLAT.....		HD		2	*	*	*		*	162	
			5310-877-5797	MS21044N3	<96906>	.NUT,SELF-LOCKING,HEXAGON.... ---#---		EA		1	*	*	*		*	162	
P	O		5340-664-0651	S1625-50133	<78286>	.CLAMP,LOOP.....		EA		1	*	*	2		*	162	6
			5340-990-9299	EAB700D4	<81996>	.CLAMP,SUPPORT..... ATTACHING PARTS		EA		1	*	*	*		*	162	7

(1) SOURCE, MAINT AND REC CODE (a) SOURCE CODE	(b) MAINT LEVEL	(c) REC CODE	(2) FEDERAL STOCK NUMBER	REFERENCE NUMBER	(3) DESCRIPTION	MODELS USABLE ON CH-34C	(4) UNIT OF ISSUE	(5) QTY INC IN UNIT PACK	(6) QTY INC IN UNIT	(7) 30-DAY DS GS MAINT ALW (a) 1-20	(b) 21-50	(c) 51-100	(8) 1-YR ALW PER 100 EQUIP CNTGCY	(9) DEPOT MAINT ALW PER 100 EQUIP	(10) ILLUSTRATION (a) FIG NO	(b) ITEM NO
			5305-989-7435	MS35207-264	<96906> .SCREW,MACHINE.....		HD		1	*	*	*		*	162	8
			5310-183-4406	AN960PD10	<88044> .WASHER,FLAT.....		HD		2	*	*	*		*	162	
			5310-877-5797	MS21044N3	<96906> .NUT,SELF-LOCKING,HEXAGON....		EA		1	*	*	*		*	162	
					---*---											
P	O		1560-622-5048	S1625-50100-3	<78286> .TUBE ASSEMBLY,MAIN..... ALIGHTING GEAR INSTALLATION		EA		1	*	2	2		*	162	9
P	O		1560-622-5320	S1625-50100-4	<73286> .TUBE ASSEMBLY,MAIN..... ALIGHTING GEAR INSTALLATION		EA		1	*	*	2		*	162	
			4730-287-0289	AN818-4D	<88044> ..NUT,TUBE COUPLING.....		EA		2	*	*	*		*	162	10
			4730-302-8641	MS20819-4D	<96906> ..SLEEVE,FLARED,TUBE FITTING.		EA		2	*	*	*		*	162	11
			4730-277-6371	AN6289D4	<88044> .LOCKNUT,TUBE FITTING.....		EA		1	*	*	*		*	162	13
			5330-805-2966	MS28778-4	<96906> .PACKING,PREFORMED.....		EA		1	REF	REF	REF	REF	*	162	14
			5330-186-4947	MS28777-4	<96906> .WASHER,NONMETALLIC.....		LL		1	*	*	*		*	162	15
			4730-725-4351	MS24394D4	<96906> .ELBOW,TUBE.....		EA		1	*	*	*		*	162	16
P	O		5340-664-0675	S1625-50154-1	<78286> .CLAMP,LOOP.....		EA		1	3	7	14		*	162	17
P	O		5340-664-0650	S1625-50154-2	<78286> .CLAMP,LOOP..... ATTACHING PARTS		EA		1	3	6	13		*	162	18
			5305-989-7435	MS35207-264	<96906> .SCREW,MACHINE.....		HD		1	*	*	*		*	162	19
			5310-183-4406	AN960PD10	<88044> .WASHER,FLAT.....		HD		2	*	*	*		*	162	
			5310-877-5797	MS21044N3	<96906> .NUT,SELF-LOCKING,HEXAGON....		EA		1	*	*	*		*	162	
					---*---											
P	O		1560-308-0162	S1625-50153	<78286> .BOOT ASSEMBLY,MAIN WHEEL....		EA		1	9	23	46		*	162	20
			5305-984-4983	MS35206-226	<88044> .SCREW,MACHINE.....		HD		1	*	*	*		*	162	21
			5310-167-0816	AN960-6	<88044> .WASHER,FLAT.....		HD		2	*	*	*		*	162	
			5310-081-8087	MS21044N06	<96906> .NUT,SELF-LOCKING,HEXAGON....		EA		1	*	*	*		*	162	
			4730-278-5006	AN929-4	<88044> .CAP,TUBE.....		EA		1	*	*	*		*	162	22
P	O		4820-497-4648	AN6207-4	<88044> .VALVE,HYDRAULIC CHECK.....		EA		1	*	*	*		REF	162	23
			5310-656-0094	MS24400-4	<96906> .NUT,PLAIN,HEXAGON.....		LL		1	*	*	*		*	162	24
			5330-805-2966	MS28778-4	<96906> .PACKING,PREFORMED.....		EA		1	REF	REF	REF	REF	*	162	25
P	O		4730-693-6910	S1525-51156	<78286> .ELBOW,TUBE TO BOSS.....		EA		1	2	2	3		*	162	26
			4730-057-4553	MS24397D3	<96906> .REDUCER,BOSS.....		EA		1	*	*	*		*	162	27
			5330-808-0794	MS28778-8	<96906> .PACKING,PREFORMED.....		EA		1	REF	REF	REF		*	162	28
AH	O	R		S1625-50101	<78286> .STRUT ASSEMBLY,MAIN..... ALIGHTING GEAR SEE FIG. 163 FOR BREAKDOWN ATTACHING PARTS		EA		1						162	29
			5306-207-1062	NAS464-9-55	<80205> .BOLT,SHEAR.....		EA		1	*	*	2		*	162	30
			5310-167-0824	AN960-916	<88044> .WASHER,FLAT.....		HD		2	*	*	*		*	162	
			5310-275-2038	MS20364-918A	<96906> .NUT,SELF-LOCKING,HEXAGON....		EA		1	*	*	*		*	162	
			5306-584-8465	NAS464-7A36	<80205> .BOLT,SHEAR.....		EA		1	*	*	*		*	162	31
			5310-184-8985	AN960PD716L	<88044> .WASHER,FLAT.....		HD		2	*	*	*		*	162	
			5310-806-1831	MS21040-7	<96906> .NUT,SELF-LOCKING,HEXAGON....		EA		1	*	*	*		*	162	
					---*---											
P	O		4730-098-4262	C155-25-5	<00624> ..NUT,TUBE COUPLING.....		EA		AR	*	*	*		*	162	
P	F		1560-529-7070	S1625-50125	<78286> .BEARING,SLEEVE.....		EA		1	*	2	2		*	162	32
P	F		1630-554-2557	S1625-50167	<78286> .BUSHING,SLEEVE.....		EA		2	*	2	2		*	162	33
P	O		1630-641-5807	S1625-50166	<78286> .SHACKLE..... ALIGHTING GEAR		EA		1	*	2	2		*	162	34
P	F		1620-591-6765	S1625-50126	<78286> .SPACER,MAIN ALIGHTING GEAR..		EA		1	2	2	3		*	162	35
			2620-141-8813		<81349> .TIRE,PNEUMATIC-TYPE III 6...										162	

(1) SOURCE, MAINT AND REC CODE (a) SOURCE CODE	(b) MAINT LEVEL	(c) REC CODE	(2) FEDERAL STOCK NUMBER	REFERENCE NUMBER	(3) DESCRIPTION	MODELS USABLE ON CH-34C	(4) UNIT OF ISSUE	(5) QTY INC IN UNIT PACK	(6) QTY INC IN UNIT	(7) 30-DAY DS/GS MAINT ALW (a) 1-20	(b) 21-50	(c) 51-100	(8) 1-YR ALW PER 100 EQUIP CNTGCY	(9) DEPOT MAINT ALW PER 100 EQUIP	(10) ILLUSTRATION (a) FIG NO	(b) ITEM NO
					CONTINUED										162	
					PLY RATING 1100 X 12											
					MIL-C-5041 RPL-BY											
					2620-174-1746											
P	O		2620-174-1746	102D138-1	<73842> .TIRE,PNEUMATIC-TYPE III.....		EA		1	3	8	15	180	*	162	36
					MIL-C-5041A											
					RPLS-- 2620-141-8813											
P	O		2620-528-9251		<81349> .INNER TUBE-MIL-T-5014B.....		EA		1	3	6	13	154	*	162	37
					TYPE III,CLASS I,STYLE S											
					RPLS-- 2620-269-7531											
P	O		1630-516-6682	530884G	<73842> .WHEEL,LANDING GEAR.....		EA		1	*	2	2	19	*	162	38
					MIL-W-5031A SEE FIG.162B											
					FOR BREAKDOWN											
					ATTACHING PARTS											
			5310-268-6035	MS21025-39	<96906> .NUT,CASTELLATED,HEXAGON.....		EA		1	*	*	*		*	162	39
			3110-877-9576	MS21258-39	<96906> .WASHER,KEY.....		EA		1	*	*	*		*	162	40
			5315-899-4116	MS24665-520	<96906> .PIN,COTTER.....		HD		1	*	*	*		*	162	41
					---*---											
P	O	R	1630-370-7266	530886SG	<73842> .BRAKE,SINGLE DISK,.....		EA		1	*	2	2	29	*	162	42
					HYDRAULIC											
					SEE FIG.162A FOR BREAKDOWN											
					ATTACHING PARTS											
			5306-180-2749	AN5H10	<88044> .BOLT,MACHINE.....		HD		12	*	*	*		*	162	43
			5310-187-2399	AN960PD516	<88044> .WASHER,FLAT.....		HD		12	*	*	*		*	162	
			5310-167-0820	AN960-516	<88044> .WASHER,FLAT.....		HD		AR	*	*	*		*	162	
			5310-088-0553	MS21044N5	<96906> .NUT,SELF-LOCKING,HEXAGON....		HD		12	*	*	*		*	162	
					---*---											
P	O		1730-562-4965	S1525-50529	<78286> .PAD.....		EA		1	*	*	2		*	162	44
					ATTACHING PARTS											
			5306-182-2016	AN4H5A	<88044> .BOLT,MACHINE.....		HD		4	*	*	*		*	162	45
					---*---											
		R	1620-654-1478	S1625-50110-3	<78286> .LEG AND AXLE ASSEMBLY-LH....										162	
					RPL-BY 1620-674-6934											
AH	F	R		S1625-50110-13	<78286> .LEG AND AXLE ASSEMBLY-LH....		EA		1						162	
					RPLS-- 1620-654-1478											
			1620-657-2957	S1625-50110-4	<78286> .LEG AND AXLE ASSEMBLY.....										162	
					RPL-BY 1620-674-6935											
AH	F			S1625-50110-14	<78286> .LEG AND AXLE ASSEMBLY-RH....		EA		1						162	
					RPLS-- 1620-657-2957											
P	F		1630-305-0408	S1625-50122	<78286> ..AXLE,ALIGHTING GEAR,MAIN...		EA		1	*	2	2		*	162	48
					WHEEL											
					ATTACHING PARTS											
			5306-584-8938	NAS464P7-50	<80205> ..BOLT,SHEAR.....		EA		2	*	*	*		*	162	49
			5310-167-0822	AN960-716	<88044> ..WASHER,FLAT-LH ONLY.....		HD		1	*	*	*		*	162	
			5310-167-0822	AN960-716	<88044> ..WASHER,FLAT-RH ONLY.....		HD		2	*	*	*		*	162	
			5310-806-1831	MS21040-7	<96906> ..NUT,SELF-LOCKING,HEXAGON...		EA		2	*	*	*		*	162	
			5306-584-8938	NAS464P7-50	<80205> ..BOLT,SHEAR.....		EA		1	*	*	*		*	162	50
			5310-167-0822	AN960-716	<88044> ..WASHER,FLAT-LH.....		HD		1	*	*	*		*	162	
			5310-167-0822	AN960-716	<88044> ..WASHER,FLAT-RH.....		HD		2	*	*	*		*	162	
			5310-176-8111	AN320-7	<88044> ..NUT,SLOTTED,HEXAGON.....		LL		1	*	*	*		*	162	
			5315-234-1864	MS24665-302	<96906> ..PIN,COTTER.....		HD		1	*	*	*		*	162	
					---*---											

(1) SOURCE, MAINT AND REC CODE (a) SOURCE CODE	(b) MAINT CODE	(c) REC CODE	(2) FEDERAL STOCK NUMBER	REFERENCE NUMBER	(3) DESCRIPTION	MODELS USABLE ON CH-34C	(4) UNIT OF ISSUE	(5) QTY INC IN UNIT PACK	(6) QTY INC IN UNIT	(7) 30-DAY DS GS MAINT ALW (a) 1-20	(b) 21-50	(c) 51-100	(8) 1-YR ALW PER 100 EQUIP CNTGCY	(9) DEPOT MAINT ALW PER 100 EQUIP	(a) FIG NO	(b) ITEM NO
AO	O			S1625-50131	<78286> ..GROUND ASSEMBLY-LH ONLY....		EA		1						162	51
			5310-985-0765	S555318	<78286> ...NUT,PLAIN,HEXAGON..... RPL-BY 5310-754-3376										162	
P	O		5310-754-3376	SS5077	<78286> ...NUT,PLAIN,HEXAGON..... RPLS-- 5310-985-0765		EA		1	*	*	*		*	162	52
P	O		1560-591-6762	S1625-50131-2	<78286> ...CABLE ASSEMBLY,ALIGHTING.. GEAR		EA		1	3	8	15		*	162	53
P	O		1560-327-3873	S1625-50131-1	<78286> ...HOLDER ASSEMBLY,..... ALIGHTING GEAR		EA		1	*	*	*		*	162	54
P	F		1560-346-1170	S1625-50119-1	<78286> ..UNIVERSAL ASSEMBLY-LH.....		EA		1	*	2	2		*	162	55
			1620-571-3674	S1625-50119-4	<78286> ..UNIVERSAL ASSEMBLY,..... LANDING GEAR-RH OBS-BY 1620-346-1171										162	
P	F		1620-346-1171	S1625-50119-2	<78286> ..UNIVERSAL ASSEMBLY-RH..... OBSLTS 1620-571-3674		EA		1	*	*	2	7	*	162	
			4730-050-4203	MS15001-1	<96906> ...FITTING,LUBRICATION.....		EA		2	*	*	*		*	162	56
P	F		1560-294-0151	S1625-50109	<78286> ...BEARING,SLEEVE.....		EA		2	*	2	2		*	162	57
			1630-517-8958	S1625-50121	<78286> ...BEARING,SLEEVE.....		EA		1						162	
P	F		3120-826-5618	S1625-50121-1	<78286> ...BEARING,SLEEVE..... RPLS-- 1630-517-8958		EA		1	*	*	*		*	162	58
P	O		1560-098-1565	S1625-50134	<78286> ..ADAPTER,AIRCRAFT TOWING.... ATTACHING PARTS		EA		1	*	*	*		*	162	59
			5306-286-1467	NAS464-8-32	<80205> ..BOLT,SHEAR.....		EA		1	*	*	*		*	162	60
			5310-167-0823	AN960-816	<88044> ..WASHER,FLAT.....		HD		1	*	*	*		*	162	
			5310-176-8112	AN320-8	<88044> ..NUT,SLOTTED,HEXAGON.....		LL		1	*	*	*		*	162	
			5315-234-1856	MS24665-155	<96906> ..PIN,COTTER.....		HD		1	*	*	*		*	162	
					---*---											
P	O		5340-826-9783	025-484-00	<71468> ..COVER,ELECTRICAL CONNECTOR. RPLS-- 1560-654-3174		EA		1	*	*	*		*	162	61
P	F		1560-509-4594	S1625-50129	<78286> ..GUIDE,MAIN WHEEL ALIGHTING.		EA		1	*	*	*		*	162	62
			1620-591-8323	S1625-50111-1	<78286> ..LEG ASSEMBLY-LH RPL-BY.... 1560-671-1926										162	
		R	1560-327-3875	S1625-50160-1	<78286> ..LEG ASSEMBLY-LH RPL-BY.... 1560-671-1926										162	
		R	1620-674-6936	S1625-50111-5	<78286> ..LEG ASSEMBLY-LH RPL-BY.... 1560-671-1926										162	
P	H	R	1560-671-1926	S1625-50160-5	<78286> ..LEG ASSEMBLY-LH RPLS--.... 1560-327-3875, 1620-591-8323,& 1620-674-6936		EA		1	*	*	*	*	*	162	63
		R	1620-591-8324	S1625-50111-2	<78286> ..LEG ASSEMBLY-RH RPL-BY.... 1620-674-6937										162	
		R	1560-327-3876	S1625-50160-2	<78286> ..LEG ASSEMBLY-RH RPL-BY.... 1560-671-1927										162	
		R	1620-674-6937	S1625-50111-6	<78286> ..LEG ASSEMBLY-RH RPL-BY.... 1560-671-1927										162	
P	H	R	1560-671-1927	S1625-50160-6	<78286> ..LEG ASSEMBLY-RH RPLS--.... 1560-327-3876, 1620-591-8324,& 1620-674-6937		EA		1	*	*	2		*	162	
P	F		5340-664-1047	S1625-50128	<78286> .RING,RETAINING.....		EA		1	*	2	2		*	162	64
P	F		1650-640-8557	MS28776-37	<96906> .RING,WIPER.....		EA		1	*	*	*		*	162	65

(1) SOURCE, MAINT AND REC CODE (a) SOURCE CODE	(b) MAINT LEVEL	(c) REC CODE	(2) FEDERAL STOCK NUMBER	REFERENCE NUMBER	(3) DESCRIPTION	MODELS USABLE ON CH-34C	(4) UNIT OF ISSUE	(5) QTY INC IN UNIT PACK	(6) QTY INC IN UNIT	(7) 30-DAY DS GS MAINT ALW (a) 1-20	(b) 21-50	(c) 51-100	(8) 1-YR ALW PER 100 EQUIP CNTGCY	(9) DEPOT MAINT ALW PER 100 EQUIP	(10) ILLUSTRATION (a) F.G NO	(b) ITEM NO
					CONTINUED										165	44
					ATTACHING PARTS											
			5306-180-3360	AN4H21A <88044>	....BOLT,MACHINE.....		HD		1	*	*	*		*	165	45
			5310-187-2354	AN960PD416 <88044>	....WASHER,FLAT.....		HD		2	*	*	*		*	165	
			5310-877-5796	MS21044N4 <96906>	....NUT,SELF-LOCKING,HEXAGON.		EA		1	*	*	*		*	165	
			5306-182-2058	AN3H5A <88044>	....BOLT,MACHINE.....		EA		6	*	*	*		*	165	46
			5310-183-4406	AN960PD10 <88044>	....WASHER,FLAT.....		HD		6	*	*	*		*	165	
					---*---											
P	F		5310-208-3892	S1525-50521 <78286>	....NUT,PLAIN,SQUARE.....		EA		1	2	2	3		*	165	47
P	F		5340-596-8846	S1525-50522 <78286>	....SPACER,RING.....		EA		1	*	*	*		*	165	48
P	O		1630-569-2559	S1525-50517-1 <78286>	....CAM,TAIL WHEEL USBL.....		EA		1	*	2	2		*	165	49
					EFF 54-2906 &											
					SUBSEQUENT											
			1560-573-4088	S1525-50518-3 <78286>	....CAM,TAIL WHEEL RPL-BY...		EA			*	*	*			165	
					1560-573-4089											
P	F		1560-573-4089	S1525-50518-5 <78286>	....CAM,TAIL WHEEL RPLS--...		EA		1	*	*	2		*	165	50
					1560-573-4088											
P	F		5315-527-2521	S1525-50520 <78286>	....KEY,WOODRUFF <		EA		1	2	2	3		*	165	51
P	F		1630-307-3630	S1625-50518 <78286>	....SHAFT,STRAIGHT.....		EA		1	2	2	3		*	165	52
P	F		5330-641-5794	11X2270 <73680>	....SEAL,PLAIN,ENCASED.....		EA		1	*	*	*		*	165	53
X1				LL510749 <60038>	....CONE AND ROLLERS,.....		EA		2						165	54
					TAPERED ROLLER BEARING											
X1				LL510710 <60038>	....CUP,TAPERED ROLLER.....		EA		2						165	55
					BEARING											
P	F		3110-067-6405	LL510749LL510710 <60038>	....BEARING,ROLLER,TAPERED...		EA		2	*	*	*		*	165	
				RR100C <80756>	....RING,RETAINING.....		EA		1						165	56
P	O		1560-628-0723	S1625-50555 <78286>	....PIN ASSEMBLY.....		EA		1	2	4	8		*	165	57
P	O		5340-285-6695	RR87C <80756>	.....RING,RETAINING.....		EA		1	*	*	*		*	165	58
P	O		1560-566-2407	S1625-50523 <78286>	.....RETAINER,LOCK PIN,.....		EA		1	*	2	2		*	165	59
					ALIGHTING GEAR TAIL											
					WHEEL											
P	O		1630-520-6311	S1625-50548 <78286>	.....SPRING,HELICAL.....		EA		1	*	*	*		*	165	60
					COMPRESSION RPLS--											
					1560-315-0892											
P	O		5315-633-6991	S1625-50557 <78286>	.....PIN,STRAIGHT,HEADLESS...		EA		1	REF	REF	REF		REF	165	61
P	O		1560-633-6973	S1625-50556 <78286>	.....BUSHING.....		EA		1	*	2	2		*	165	62
P	O		1560-614-5134	S1625-50524 <78286>	.....HOUSING.....		EA		1	*	*	2		*	165	63
P	O		1730-562-4965	S1525-50529 <78286>	....PAD.....		EA		1	*	*	REF		REF	165	64
					ATTACHING PARTS											
			5306-182-2016	AN4H5A <88044>	....BOLT,MACHINE.....		HD		4	*	*	*		*	165	65
			5310-141-1795	AN960-416 <88044>	....WASHER,FLAT.....		HD		4	*	*	*		*	165	
					---*---											
			1620-091-3982	S1625-50504 <78286>	....YOKE ASSEMBLY,TAIL WHEEL.		EA			*	*	*			165	
					RPL-BY 1620-098-1567											
P	O		1620-098-1567	S1625-50504-1 <78286>	....YOKE ASSEMBLY,TAIL.....		EA		1	*	2	2		*	165	66
					WHEEL RPLS--											
					1620-091-3982											
P	F		1560-662-5513	S1625-50520 <78286>	.....BEARING,SLEEVE.....		EA		4	2	3	5		*	165	67
P	F		1620-662-4004	S1625-50511 <78286>	.....BEARING,SLEEVE.....		EA		2	*	*	*		*	165	68
P	F		5310-200-7749	RL24SB7 <83324>	.....RING,LOCK,SERRATED.....		HD		6					REF	165	69
P	D		5340-290-5124	R205SB7 <83324>	.....INSERT,SCREW THREAD.....		EA		6					REF	165	70
P	F		1630-302-9080	S1625-50512 <78286>	.....LINER,ALIGHTING GEAR....		EA		2	*	2	2		*	165	71

(1) SOURCE, MAINT AND REC CODE (a) SOURCE CODE	(b) MAINT LEVEL	(c) REC CODE	(2) FEDERAL STOCK NUMBER	REFERENCE NUMBER		(3) DESCRIPTION	MODELS USABLE ON CH-34C	(4) UNIT OF ISSUE	(5) QTY INC IN UNIT PACK	(6) QTY INC IN UNIT	(7) 30-DAY DS/GS MAINT ALW (a) 1-20	(b) 21-50	(c) 51-100	(8) 1-YR ALW PER 100 EQUIP CNTGCY	(9) DEPOT MAINT ALW PER 100 EQUIP	(10) ILLUSTRATION (a) FIG NO	(b) ITEM NO
						CONTINUED										165	71
						TAIL WHEEL											
			1560-766-8576	S1625-50508	<78286>	.....YOKE,ALIGHTING GEAR.....										165	
						TAIL WHEEL RPL-BY											
						PN S1625-50508-2											
X1				S1625-50508-2	<78286>	.....YOKE,ALIGHTING GEAR.....		EA		1						165	72
						TAIL WHEEL RPLS--											
						1560-766-8576 WHEN											
						EXHTD RQTN NHA											
						1620-098-1567											
X1				S1625-50508-3	<78286>	.....YOKE,ALIGHTING GEAR.....		EA		1						165	
						WHEN EXHTD RQTN NHA											
						1620-098-1567											
P	O	R	1560-564-1508	S1625-50510-1	<78286>	OLEO ASSEMBLY-TAIL WHEEL.....		EA			*	REF	REF			166	
						RPLS-- 1560-332-3516											
						SEE FIG.165 FOR NHA											
P	O		1630-713-1372	S1625-50545-6	<78286>	.NAMEPLATE-TAIL WHEEL OLEO...		EA		1	*	2	2		*	166	1
P	O		1560-633-6971	S1625-50545-4	<78286>	.PLATE,INSTRUCTION RPLS--....		EA		1	*	2	2		*	166	2
						1620-558-8653											
P	F		5340-696-2677	S1625-50544	<78286>	.RING.....		EA		1	*	*	*		*	166	3
P	H		5310-305-7613	S1625-50543	<78286>	.NUT,ALIGHTING GEAR.....		EA		1	*	*	*		*	166	4
P	H		1620-564-1509	S1625-50539-1	<78286>	.ORIFICE,ALIGHTING GEAR.....		EA		1	*	*	2		*	166	5
						RPLS-- 1630-307-3634											
						ATTACHING PARTS											
				S1625-50542	<78286>	.PIN,STRAIGHT,HEADED.....		EA		4						166	6
						COMPONENT OF KIT											
						1620-953-2354											
						---*---											
P	H		1630-307-3635	S1625-50541	<78286>	.SPACER,ALIGHTING GEAR.....		EA		1	*	*	*		*	166	7
						ASSEMBLY											
			5330-171-5099	MS28783-6	<96906>	.RETAINER,PACKING.....		EA		2	*	*	*		*	166	8
			5330-582-2133	MS28775-011	<96906>	.PACKING,PREFORMED.....		EA		1	*	*	*		*	166	9
P	H		1630-347-7132	S1625-50540	<78286>	.BEARING,SLEEVE.....		EA		1	*	2	2		*	166	10
			5330-663-7151	MS28782-32	<96906>	.RETAINER,PACKING.....		EA		2	*	*	*		*	166	11
			5330-297-9986	MS28775-329	<96906>	.PACKING,PREFORMED.....		EA		1	*	*	*		*	166	12
			1650-640-8538	AN6231A21	<88044>	.RING,PISTON.....		EA		1	3	8	16		*	166	13
P	F	R	1630-307-3632	S1625-50530	<78286>	.CYLINDER ASSEMBLY.....		EA		1	*	*	*		*	166	14
			1620-715-2264	S1607-5577-2	<78286>	PARTS KIT,TAIL WHEEL OLEO....										166	
						RPL-BY 1620-996-3909 U/O											
						1560-564-1508											
P	F		1620-996-3909	S1607-5577-4	<78286>	PARTS KIT,TAIL WHEEL OLEO....		EA		1	2	2	3		*	166	
						RPLS-- 1620-715-2264 U/O											
						1560-564-1508 SEE											
						FUNCTIONAL GROUP 50											
						FOR COMPONENTS											
			1620-715-2265	S1607-5577-3	<78286>	PARTS KIT,TAIL WHEEL OLEO....										166	

(1) SOURCE, MAINT AND REC CODE (a) SOURCE CODE	(b) MAINT CODE	(c) RECOV CODE	(2) FEDERAL STOCK NUMBER	REFERENCE NUMBER	(3) DESCRIPTION	MODELS USABLE ON CH-34C	(4) UNIT OF ISSUE	(5) QTY INC IN UNIT PACK	(6) QTY INC IN UNIT	(7) 30-DAY DS GS MAINT ALW (a) 1-20	(b) 21-50	(c) 51-100	(8) 1-YR ALW PER 100 EQUIP CNTGCY	(9) DEPOT MAINT ALW PER 100 EQUIP	(10) ILLUSTRATION (a) FIG NO	(b) ITEM NO
					CONTINUED RPL-BY 1620-953-2354 U/O 1560-564-1508										166	
P	F		1620-953-2354	S1607-5577-5 <78286>	PARTS KIT,TAIL WHEEL OLEO.... RPLS-- 1620-715-2265 U/O 1560-564-1508 SEE FUNCTIONAL GROUP 50 FOR COMPONENTS		EA		1	2	3	5		*	166	

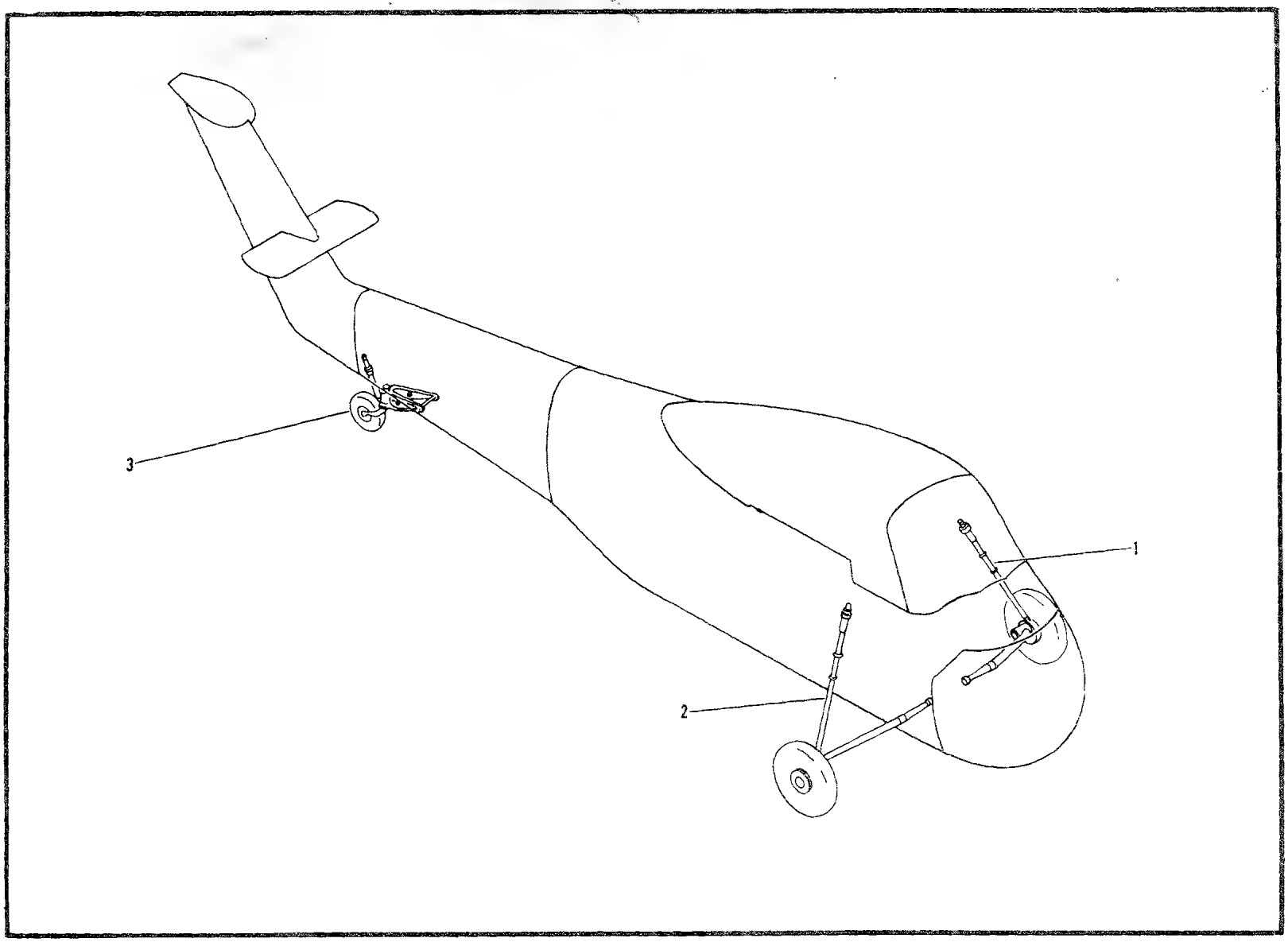

Figure 161. Landing Gear Installation

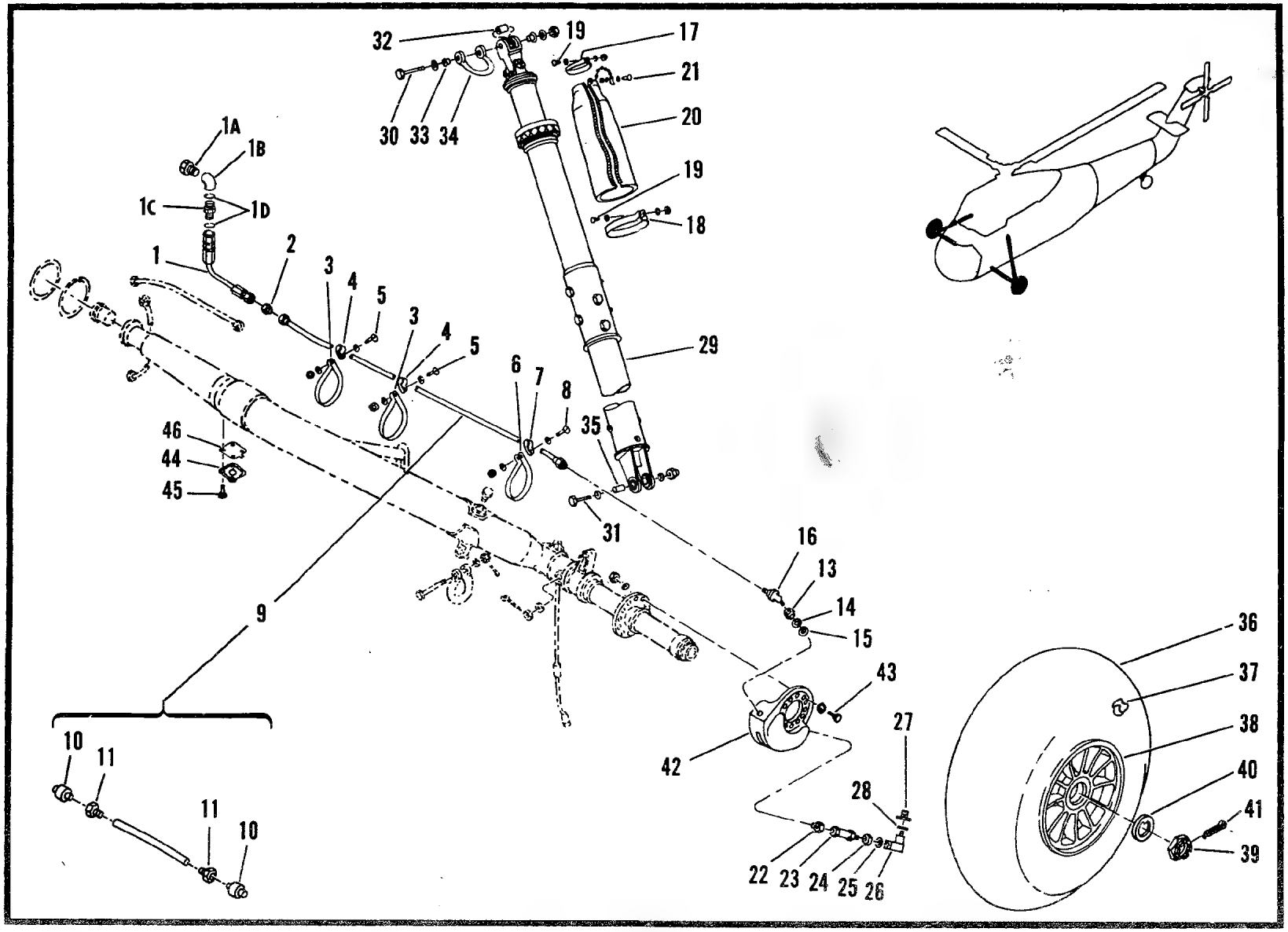

Figure 162. Main Landing Gear Installation- LH (Sheet 1 of 2)

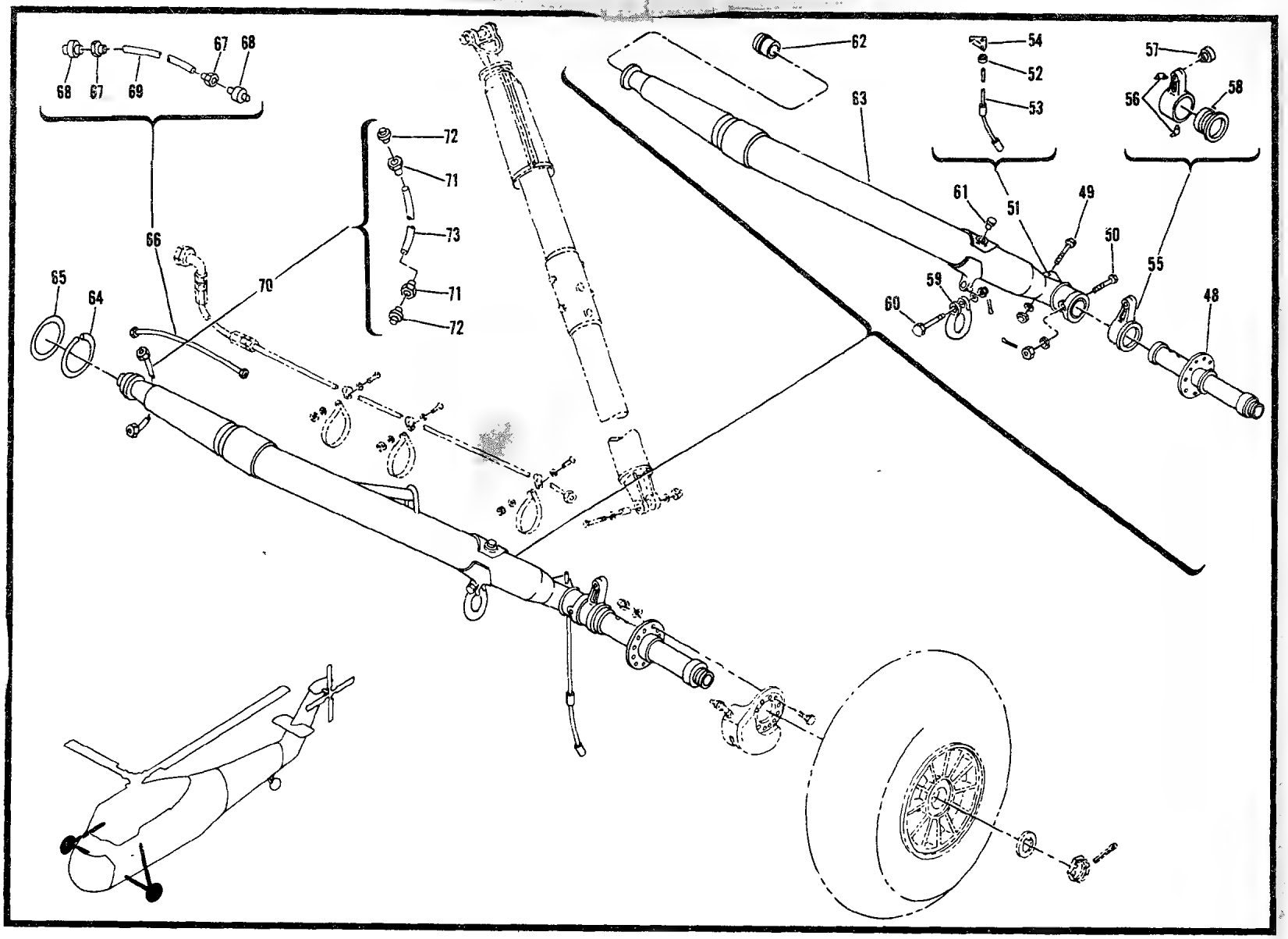

Figure 162. Main Landing Gear Installation -LH (Sheet 2 of 2)

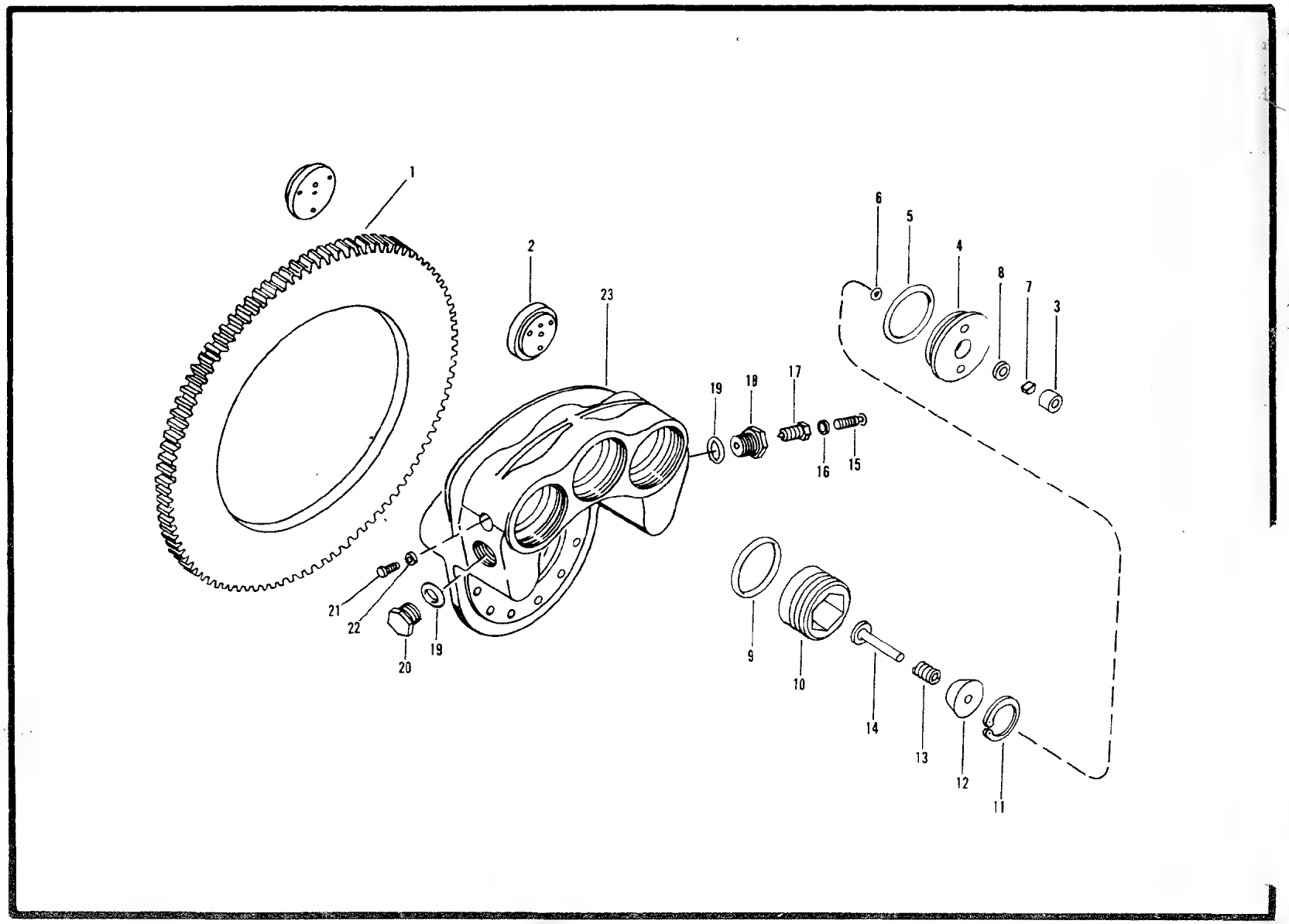

Figure 167 Brake, Single Disc, Hydraulic

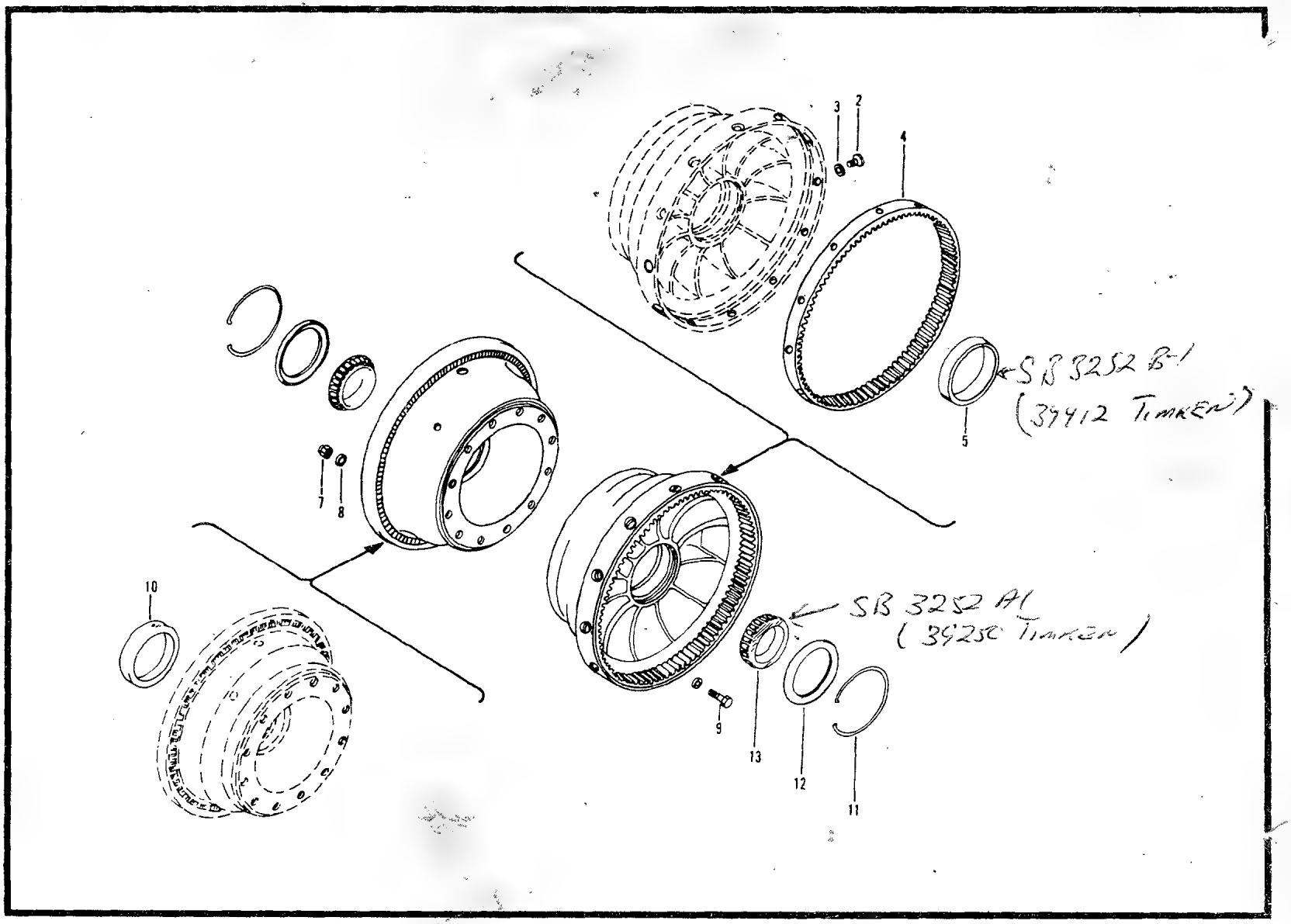

Figure 162B. Wheel, Landing Gear

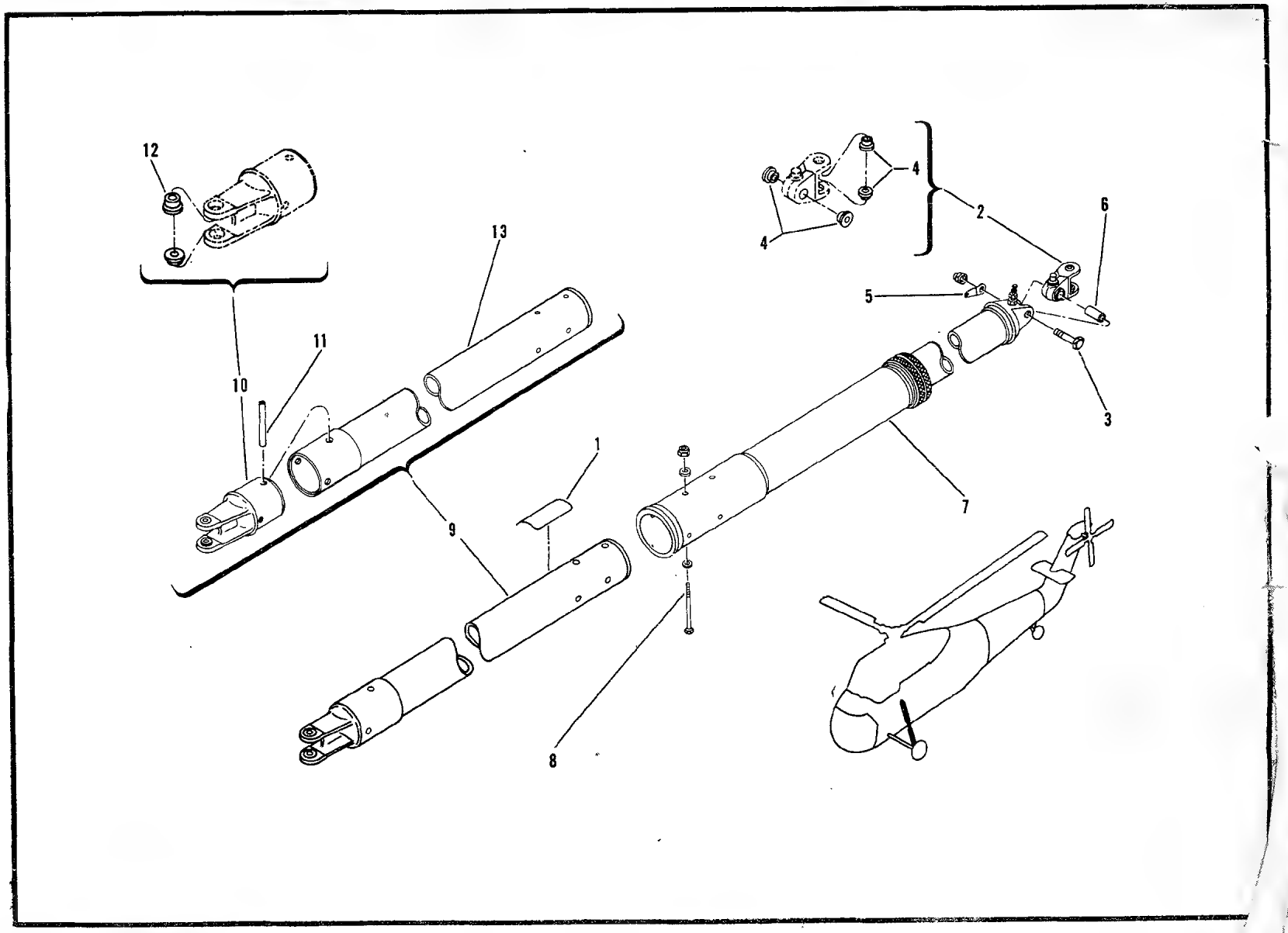

Figure 163. Stru' 'sembly, Main Alighting Gear

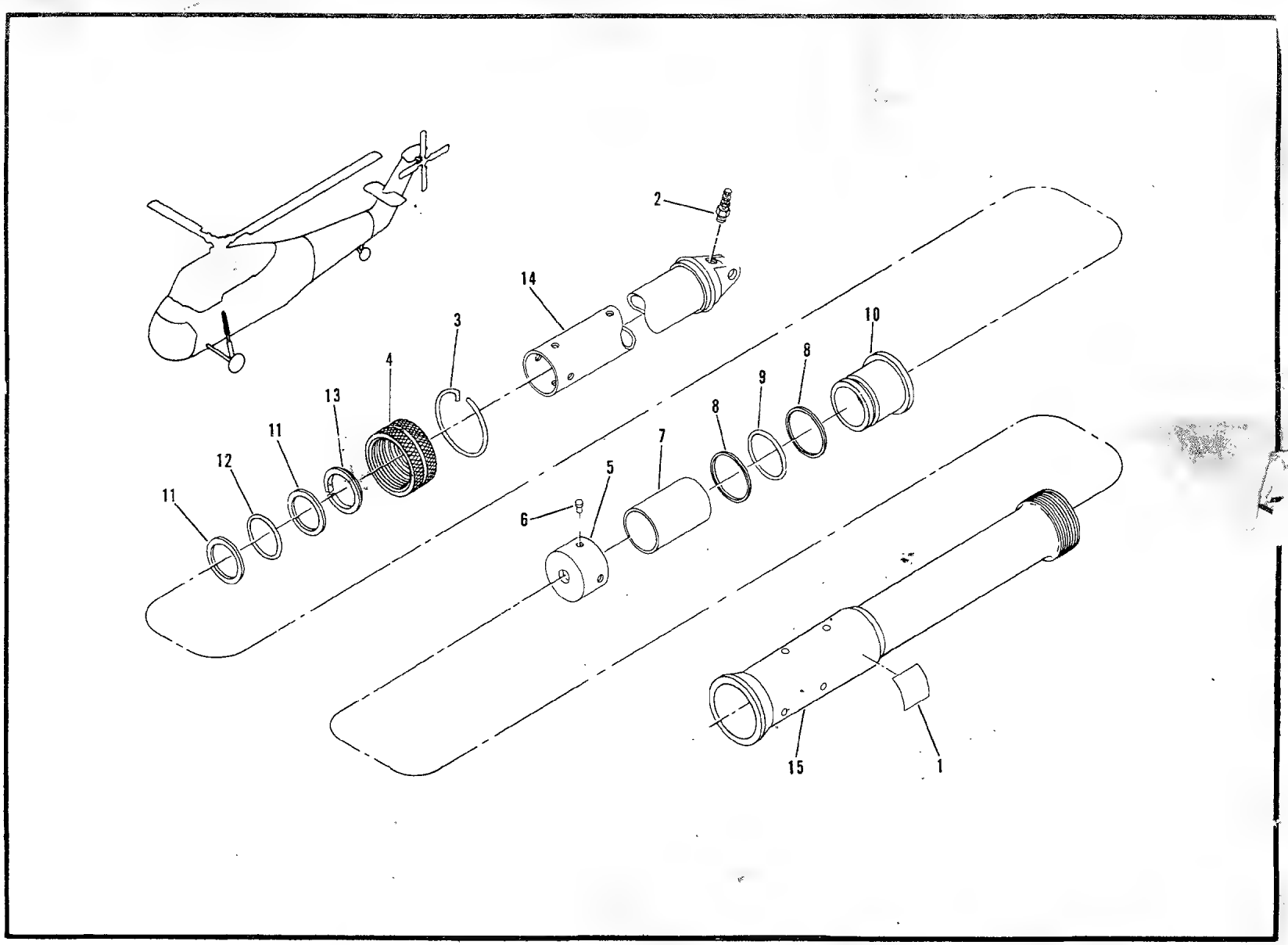

Figure 164. Oleo Assembly- Main Wheel

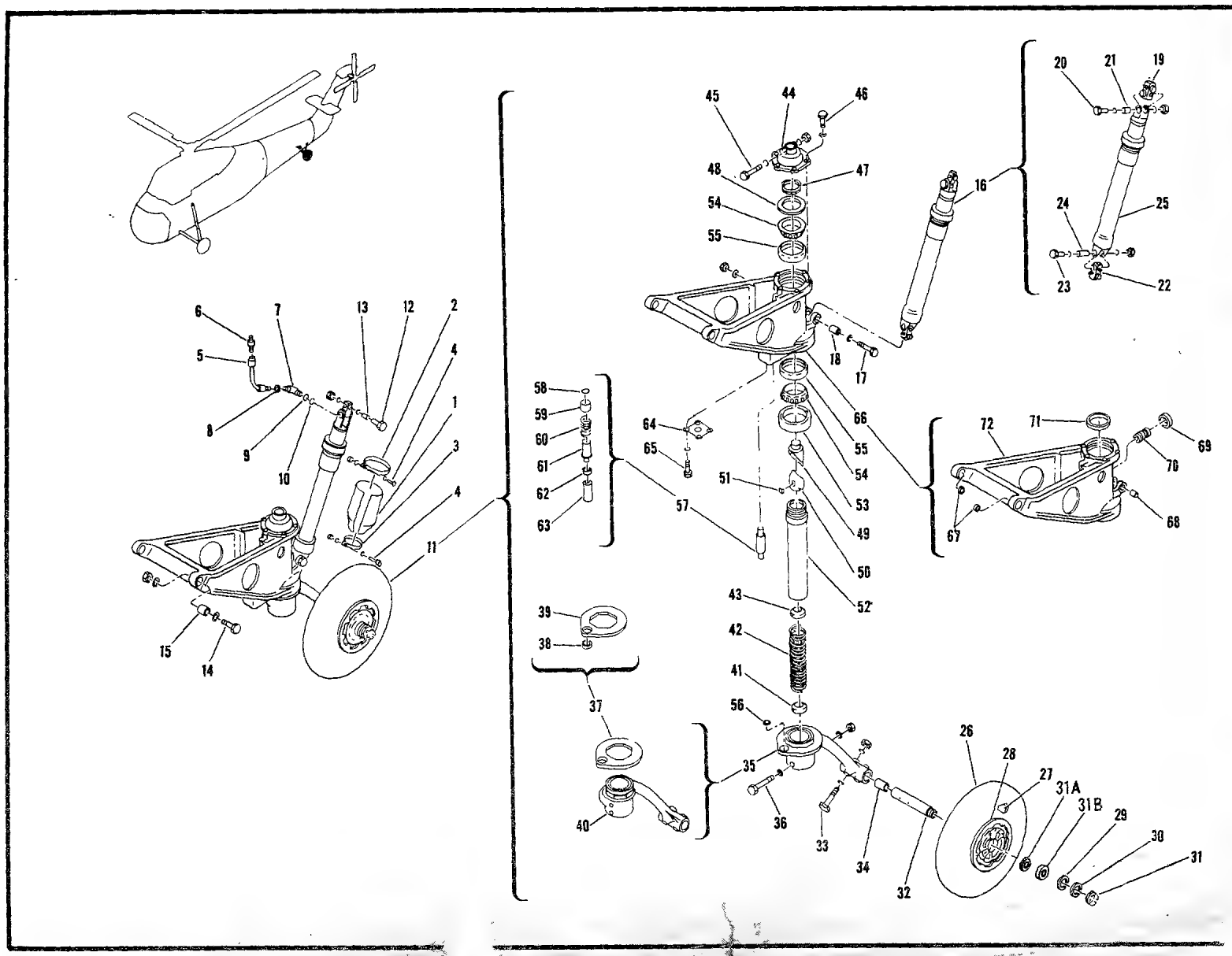

891 Fig. 5. Tail Landing Gear Installation

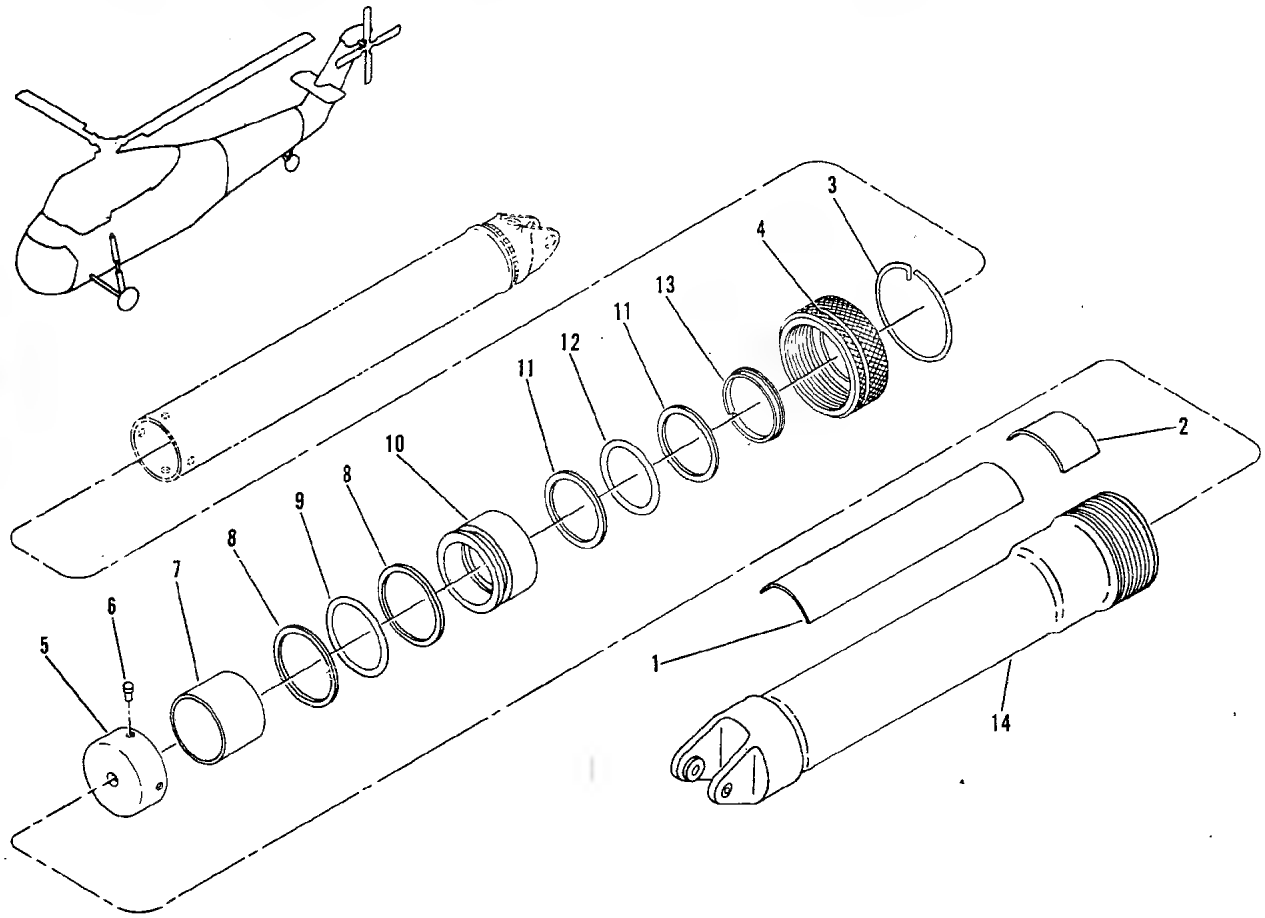

Figure 166. Oleo Assembly–Tail Wheel

(1) SOURCE, MAINT AND REC CODE (a) SOURCE CODE	(b) MAINT LEVEL	(c) REC CODE	(2) FEDERAL STOCK NUMBER	(3) DESCRIPTION REFERENCE NUMBER			MODELS USABLE ON CH-34C	(4) UNIT OF ISSUE	(5) QTY INC IN UNIT PACK	(6) QTY INC IN UNIT	(7) 30-DAY DS GS MAINT ALW (a) 1-20	(b) 21-50	(c) 51-100	(8) 1 YR ALW PER 100 EQUIP CNTGCY	(9) DEPOT MAINT ALW PER 100 EQUIP	(10) ILLUSTRATION (a) FIG NO	(b) ITEM NO
						CONTINUED 2 EA 4730-967-9513 SOCKET 2 EA 4730-967-9521 SLEEVE 2 EA 5340-834-8330 DUST PLUG									167	
				R3800DD4-019 1-4	<50599>	..HOSE ASSEMBLY-OIL..... PRESSURE		EA		1						167	
P	F		4730-328-4802	SS4015-2S16S	<78286>	..RESTRICTOR ASSEMBLY..... RPLS-- 1560-568-7437		EA		1	2	2	5		*	167	15
			5310-656-0094	MS24400-4	<96906>	..NUT,PLAIN,HEXAGON.....		LL		1	*	*	*		*	167	16
			5330-805-2966	MS28778-4	<96906>	..PACKING,PREFORMED.....		EA		1	REF	REF	REF	REF	*	167	17
P	F		4730-033-4554	155S4-4S	<00624>	..COUPLING,HALF,FLUID LINE... ATTACHING PARTS		EA		2	*	*	*		REF	167	18
			5305-059-3663	MS51958-67	<96906>	..SCREW,MACHINE.....		EA		6	*	*	*		*	167	19
			5310-877-5797	MS21044N3	<96906>	..NUT,SELF-LOCKING,HEXAGON...		EA		6	*	*	*		*	167	
						---*---											
			1560-446-6344	S1655-80000-2	<78286>	.ELECTRICAL WIRING..... INSTALLATION SEE FIG.180 FOR BREAKDOWN		EA		1	*	*	*			167	20
				S1665-80000-1	<78286>	.HYDRAULIC SYSTEM LINES..... INSTALLATION SEE FIG.181 FOR BREAKDOWN				1						167	21
				S1630-80800-1	<78286>	DEMOUNTABLE POWER PACKAGE.... CONTROLS INSTALLATION SEE FIG.167 FOR NHA										169	
			5306-814-5533	AN174CH12A	<88044>	.BOLT,MACHINE.....		EA		1	*	*	*		*	169	1
			5310-515-7449	AN960C416L	<88044>	.WASHER,FLAT.....		HD		3	*	*	*		*	169	
			5310-167-1285	AN310-4	<88044>	.NUT,CASTELLATED,HEXAGON.....		HD		1	*	*	*		*	169	
			5315-234-1856	MS24665-155	<96906>	.PIN,COTTER.....		HD		1	*	*	*		*	169	
			5306-814-5533	AN174CH12A	<88044>	.BOLT,MACHINE.....		EA		1	*	*	*		*	169	2
			5310-515-7449	AN960C416L	<88044>	.WASHER,FLAT.....		HD		3	*	*	*		*	169	
			5310-167-1285	AN310-4	<88044>	.NUT,CASTELLATED,HEXAGON.....		HD		1	*	*	*		*	169	
			5315-234-1856	MS24665-155	<96906>	.PIN,COTTER.....		HD		1	*	*	*		*	169	
P	O		1560-623-1415	S1630-80820-6	<78286>	.GUIDE ASSEMBLY.....		EA		1	*	*	2		*	169	3
				S1630-80815	<78286>	.CONTROL ASSEMBLY-THROTTLE... & MIXTURE RPL-BY 2995-754-7433										169	
				S1630-80815-1	<78286>	.CONTROL ASSEMBLY-THROTTLE... & MIXTURE RPL-BY 2995-754-7433										169	
			2995-830-5699	S1630-80815-2	<78286>	.CONTROL ASSEMBLY-THROTTLE... & MIXTURE RPL-BY 2995-754-7433										169	
			2995-830-5707	S1630-80815-4	<78286>	.THROTTLE,BOX ASSEMBLY..... RPL-BY 2995-754-7433										169	
P	F		2995-754-7433	S1630-80815-5	<78286>	.ENGINE CONTROL ASSEMBLY..... RPLS-- 2995-830-5699,		EA		1	2	2	3		*	169	4

(1) SOURCE, MAINT AND REC CODE (a) SOURCE CODE	(b) MAINT LEVEL	(c) REC CODE	(2) FEDERAL STOCK NUMBER	REFERENCE NUMBER	(3) DESCRIPTION	MODELS USABLE ON CH-34C	(4) UNIT OF ISSUE	(5) QTY INC IN UNIT PACK	(6) QTY INC IN UNIT	(7) 30-DAY DS/GS MAINT ALW (a) 1-20	(b) 21-50	(c) 51-100	(8) 1-YR ALW PER 100 EQUIP CNTGCY	(9) DEPOT MAINT ALW PER 100 EQUIP	(10) ILLUSTRATION (a) FIG NO	(b) ITEM NO
					CONTINUED										169	4
					2995-830-5707,											
					PN S1630-80815,&											
					S1630-80815-1											
					ATTACHING PARTS											
			5306-182-1849	AN5CH13A <88044>	.BOLT,MACHINE.....		EA		5	*	*	*		*	169	5
			5310-167-0803	AN960C516 <88044>	.WASHER,FLAT.....		HD		5	*	*	*		*	169	
			5306-182-1931	AN5CH15 <88044>	.BOLT,MACHINE.....		EA		1	*	*	*		*	169	6
			5310-167-0803	AN960C516 <88044>	.WASHER,FLAT.....		HD		1	*	*	*		*	169	
					---+---											
			1560-627-3981	S1630-80817-8 <78286>	..COVER ASSEMBLY RPL-BY.....										169	
					1560-633-5137											
P	O		1560-633-5137	S1630-80817-14 <78286>	..COVER ASSEMBLY.....		EA		1	2	3	6		*	169	7
					1560-627-3981											
X2	O			S1630-80817-13 <78286>	...SEAL.....		EA		1						169	
			1560-625-9316	S1630-80818-1 <78286>	..PIN ASSEMBLY USE UNTIL....										169	
					EXHAUSTED,THEN											
					REQUISITION 1560-633-6936											
			5315-560-5395	S1630-80818 <78286>	..PIN ASSEMBLY USE UNTIL....										169	
					EXHAUSTED,THEN											
					REQUISITION 1560-633-6936											
P	F		1560-633-6936	S1630-80818-3 <78286>	..PIN ASSEMBLY,ENGINE.....		EA		2	*	*	2		*	169	8
					CONTROLS											
P	F		1560-073-6595	S1630-80817-2 <78286>	...RETAINER,COVER.....		EA		1	*	*	*		*	169	11
					ATTACHING PARTS											
			5305-180-0010	AN525-10R8 <88044>	...SCREW,MACHINE.....		HD		2	*	*	*		*	169	12
			5310-167-0818	AN960-10 <88044>	...WASHER,FLAT.....		HD		8	*	*	*		*	169	
			5305-180-0012	AN525-10R10 <88044>	...SCREW,MACHINE.....		HD		2	*	*	*		*	169	13
			5310-877-5797	MS21044N3 <96906>	...NUT,SELF-LOCKING,HEXAGON..		EA		4	*	*	*		*	169	
					---+---											
MF	F			S1630-80817-3 <78286>	...STRIP,ENGINE CONTROL.....		EA		2						169	15
					MAKEFR											
					AR 9330-290-3461 PLASTIC SH											
				MS20470AD4 <96906>	...RIVET.....		EA		10						169	16
			2995-446-4768	S1630-80817-12 <78286>	...DOUBLER.....		EA		1	*	*	*			169	17
X2	F			S1630-80817-13 <78286>	...SEAL.....		EA		1						169	18
				S1630-80817-9 <78286>	...STRIP-ENGINE CONTROLS.....		EA		4						169	19
					COVER											
P	F		1560-633-6938	S1630-80828 <78286>	..PIN.....		EA		1	2	3	5		*	169	20
			5310-167-0753	AN960PD10L <88044>	..WASHER,FLAT.....		HD		2	*	*	*		*	169	20A
			5315-234-1856	MS24665-155 <96906>	..PIN,COTTER.....		HD		2	*	*	*		*	169	20B
			5306-576-1960	AN3CH37A <88044>	..BOLT,MACHINE.....		EA		1	*	*	*		*	169	21
			5310-167-0753	AN960PD10L <88044>	..WASHER,FLAT.....		HD		2	*	*	*		*	169	
			5310-263-2862	MS21045C3 <96906>	..NUT,SELF-LOCKING,HEXAGON...		HD		1	*	*	*		*	169	
			5340-811-2927	NAS43DD3-206 <80205>	..SPACER,SLEEVE.....		EA		1	*	*	*		*	169	22
P	F		1560-701-4710	S1630-80800-6 <78286>	..SHIM,LAMINATED.....		EA		2	*	2	2		*	169	23
P	F		4730-992-6529	51249 <61864>	..PLUG-BUTTON.....		EA		1	*	2	2		*	169	24
P	F		1560-623-5869	S1630-80803-2 <78286>	..ROD ASSEMBLY,THROTTLE.....		EA		1	2	3	6		*	169	25
					RPLS-- 1560-560-5387											
					ATTACHING PARTS											
			5306-285-5326	AN174H11A <88044>	..BOLT,MACHINE.....		EA		1	*	*	*		*	169	26
			5310-141-1795	AN960-416 <88044>	..WASHER,FLAT.....		HD		2	*	*	*		*	169	

(1) SOURCE, MAINT AND REC CODE (a) SOURCE CODE	(b) MAINT LEVEL	(c) REC CODE	(2) FEDERAL STOCK NUMBER	REFERENCE NUMBER		(3) DESCRIPTION	MODELS USABLE ON CH-34C	(4) UNIT OF ISSUE	(5) QTY INC IN UNIT PACK	(6) QTY INC IN UNIT	(7) 30-DAY DS GS MAINT ALW (a) 1-20	(b) 21-50	(c) 51-100	(8) 1-YR ALW PER 100 EQUIP CNTGCY	(9) DEPOT MAINT ALW PER 100 EQUIP	(10) ILLUSTRATION (a) FIG NO	(b) ITEM NO
			5310-857-5557	MS21045L4	<96906>	..NUT,SELF-LOCKING,HEXAGON... ---*---		HD		1	*	*	*		*	169	
P	F		3110-159-1636	MR4	<77896>	...BEARING,ROLLER,ROD END....		EA		1	2	5	10		*	169	27
			5310-167-1300	AN316-6R	<88044>	...NUT,PLAIN,HEXAGON.....		HD		1	*	*	*		*	169	28
P	F		1560-633-0790	S1630-80803-1	<78286>	...TUBE,THROTTLE AND..... MIXTURE CONTROL		EA		1	*	*	*		*	169	28A
P	F		3110-159-1636	MR4	<77896>	...BEARING,BALL,ROD END.....		EA		1	REF	REF	REF		REF	169	30
			5310-167-1300	AN316-6R	<88044>	...NUT,PLAIN,HEXAGON.....		HD		1	*	*	*		*	169	31
P	F		1560-623-5869	S1630-80803-2	<78286>	..ROD ASSEMBLY,THROTTLE..... RPLS-- 1560-560-5387 ATTACHING PARTS		EA		1	REF	REF	REF		REF	169	32
P	F		5306-561-4178	S1630-80810	<78266>	..BOLT,THROTTLE CONTROLS.....		EA		1	2	6	11		*	169	33
			5310-184-8980	AN960PD516L	<88044>	..WASHER,FLAT.....		HD		1	*	*	*		*	169	34
			5310-167-0836	AN960-516L	<88044>	..WASHER,FLAT.....		HD		1	*	*	*		*	169	35
			5310-141-1795	AN960-416	<88044>	..WASHER,FLAT.....		HD		3	*	*	*		*	169	36
			5310-167-0766	AN970-4	<88044>	..WASHER,FLAT.....		HD		3	*	*	*		*	169	37
			5310-857-5557	MS21045L4	<96906>	..NUT,SELF-LOCKING,HEXAGON...		HD		1	*	*	*		*	169	38
			1560-565-7315	S1630-80811-1	<78286>	..PAD,THROTTLE CONTROL..... RPL-BY 1560-034-5298										169	
P	F		1560-613-3041	S1630-80811-3	<78286>	..PAD,THROTTLE CONTROL..... RPL-BY 1560-034-5298										169	39
P	F		1560-034-5298	SS4029-3	<78286>	..PAD THROTTLE CONTROL..... RPLS-- 1560-565-7315 1560-613-3041		EA		1	*	*	*		*	169	39
P	F		3110-159-1636	MR4	<77896>	...BEARING,BALL,ROD END.....		EA		1	REF	REF	REF		REF	169	40
			5310-167-1300	AN316-6R	<88044>	...NUT,PLAIN,HEXAGON.....		HD		1	*	*	*		*	169	41
P	F		3110-159-1636	MR4	<77896>	...BEARING,BALL,ROD END.....		EA		1	REF	REF	REF		REF	169	43
			5310-167-1300	AN316-6R	<88044>	...NUT,PLAIN,HEXAGON.....		HD		1	*	*	*		*	169	44
P	F		1560-633-0790	S1630-80803-1	<78286>	...TUBE,THROTTLE AND..... MIXTURE CONTROL		EA		1	*	*	*		REF	169	44A
			1560-566-3236	S1630-61631-23	<78286>	..CABLE ASSEMBLY,ENGINE..... CONTROL RPL-BY 1560-847-7495										169	
P	F		1560-847-7495	S1630-61631-83	<78286>	..CABLE ASSEMBLY,ENGINE..... RPLS-- 1560-566-3236		EA		1	2	2	4		*	169	45
			1560-560-5377	S1630-61631-25	<78286>	..CABLE ASSEMBLY,POWER..... PLANT ENGINE CONTROLS RPL-BY 1560-847-7497										169	
P	F		1560-847-7497	S1630-61631-85	<78286>	..CABLE ASSEMBLY,POWER..... RPLS-- 1560-560-5377		EA		1	2	2	5		*	169	46
			1560-560-5378	S1630-61631-3	<78286>	..CABLE ASSEMBLY,POWER..... PLANT CONTROLS RPL-BY 1560-866-6086										169	
P	F		1560-866-6086	S1630-61631-65	<78286>	..CABLE ASSEMBLY,POWER PLANT. RPLS-- 1560-560-5378		EA		1	2	2	3		*	169	47
			1560-560-5370	S1630-61631-1	<78286>	..CABLE ASSEMBLY,POWER PLANT. RPL-BY 1560-866-6085										169	
P	F		1560-866-6085	S1630-61631-63	<78286>	..CABLE ASSEMBLY,POWER PLANT. RPLS-- 1560-560-5370		EA		1	2	4	7		*	169	48
P	F		1560-866-6084	S1630-61631-67	<79286>	..CABLE ASSEMBLY POWER PLANT.		EA		1	*	*	*		*	169	
P	F		1560-628-3761	S1630-80804-5	<78286>	..LEVER ASSEMBLY,THROTTLE.... CONTROLS		EA		1	*	2	2		*	169	49

(1) SOURCE, MAINT AND REC CODE (a) SOURCE CODE	(b) MAINT LEVEL	(c) REC CODE	(2) FEDERAL STOCK NUMBER	REFERENCE NUMBER		(3) DESCRIPTION	MODELS USABLE ON CH-34C	(4) UNIT OF ISSUE	(5) QTY INC IN UNIT PACK	(6) QTY INC IN UNIT	(7) 30-DAY DS/GS MAINT ALW (a) 1-20	(b) 21-50	(c) 51-100	(8) 1-YR ALW PER 100 EQUIP CNTGCY	(9) DEPOT MAINT ALW PER 100 EQUIP	(10) ILLUSTRATION (a) FIG NO	(b) ITEM NO
P	F		2915-628-3760	S1630-80804-6	<78286>	..LEVER ASSEMBLY,THROTTLE....		EA		1	*	2	2		*	169	50
						OBSLTS 1560-560-5389 &											
						1560-610-1000											
						ATTACHING PARTS											
			5306-174-4115	AN174H15	<88044>	..BOLT,MACHINE.....		EA		1	*	*	*		*	169	51
			5310-141-1795	AN960-416	<88044>	..WASHER,FLAT.....		HD		4	*	*	*		*	169	
			5310-857-5557	MS21045L4	<96906>	..NUT,SELF-LOCKING,HEXAGON...		HD		1	*	*	*		*	169	
			5306-680-5306	S1630-80826	<78286>	..BOLT,SHOULDER RPL-BY.....										169	
						5306-759-9947											
P	F		5306-759-9947	S1630-80826-1	<78286>	..BOLT,SHEAR RPLS--.....		EA		1	9	23	46		*	169	52
						5306-680-5306											
			5310-167-0835	AN960-416L	<88044>	..WASHER,FLAT.....		HD		2	*	*	*		*	169	
			5310-167-1285	AN310-4	<88044>	..NUT,CASTELLATED,HEXAGON....		HD		1	*	*	*		*	169	
			5315-234-1856	MS24665-155	<96906>	..PIN,COTTER.....		HD		1	*	*	*		*	169	
						---*---											
P	F		3110-142-4456	AN201KP4A	<88044>	...BEARING,BALL,AIRFRAME.....		EA		1	*	*	*		REF	169	53
P	F		3110-142-4456	AN201KP4A	<88044>	...BEARING,BALL,AIRFRAME.....		EA		1	*	*	*		REF	169	54
P	F		3110-190-9385	DW3K2	<21335>	..BEARING,BALL,AIRFRAME.....		EA		1	*	*	*		*	169	55
P	F		5340-079-1156	S1630-80831-2	<78286>	..SPACER.....		EA		1	*	*	*		*	169	56
P	F		1560-701-4709	S1630-80800-5	<78286>	..SHIM,LAMINATED.....		EA		1	4	9	18		*	169	57
			5310-167-0766	AN970-4	<88044>	..WASHER,FLAT.....		HD		1	*	*	*		*	169	57A
P	F		5340-079-1157	S1630-80831-3	<78286>	..SPACER.....		EA		1	*	*	*		*	169	58
P	F		1560-701-4709	S1630-80800-5	<78286>	..SHIM,LAMINATED.....		EA		1	REF	REF	REF		REF	169	59
			5310-167-0766	AN970-4	<88044>	..WASHER,FLAT.....		HD		1	*	*	*		*	169	59A
P	F		1560-622-6358	S1630-80831-1	<78286>	..SPACER,THROTTLE CONTROLS...		EA		1	2	2	4		*	169	60
			5306-151-1060	AN174H42	<88044>	..BOLT,MACHINE.....		EA		1	*	*	*		*	169	61
			5310-167-0835	AN960-416L	<88044>	..WASHER,FLAT.....		HD		3	*	*	*		*	169	
			5310-167-1285	AN310-4	<88044>	..NUT,CASTELLATED,HEXAGON....		HD		1	*	*	*		*	169	
			5315-234-1856	MS24665-155	<96906>	..PIN,COTTER.....		HD		1	*	*	*		*	169	
P	F		1560-823-5983	S1630-80832-4	<78286>	..BRACE,ENGINE CONTROLS.....		EA		1	*	2	2		*	169	62
MF	F			NAS43DD4-47	<80205>	..SPACER.....		EA		1						169	63
						MAKEFR											
						AR 5340-632-1254 AL ALLY SH											
P	F		1560-701-4709	S1630-80800-5	<78286>	..SHIM,LAMINATED.....		EA		1	REF	REF	REF		REF	169	64
			5310-167-0766	AN970-4	<88044>	..WASHER,FLAT.....		HD		1	*	*	*		*	169	64A
			5340-806-9748	NAS43DD4-17	<80205>	..SPACER.....		EA		1	*	*	*			169	65
P	F		1560-701-4709	S1630-80800-5	<78286>	..SHIM,LAMINATED.....		EA		1	REF	REF	REF		REF	169	66
			5310-167-0766	AN970-4	<88044>	..WASHER,FLAT.....		HD		1	*	*	*		*	169	66A
P	F		1560-560-5396	S1630-80819	<78286>	..SPRING,HELICAL TORSION.....		EA		1	2	2	4		*	169	67
P	F		1560-562-2859	S1630-80801	<78286>	..CAM ASSEMBLY,THROTTLE.....		EA		1	2	3	6		*	169	68
						CONTROL											
P	F		1560-563-9934	S1630-80805	<78286>	...CAM,PULLEY,THROTTLE.....		EA		1	*	*	2		*	169	68A
						CONTROL											
P	F		3110-142-4456	AN201KP4A	<88044>	...BEARING,BALL,AIRFRAME.....		EA		2	*	*	*		REF	169	69
			1560-575-1989	SS4056-8-062	<78286>	...SPACER.....										169	
P	F		2995-079-8956	SS4059-06-062	<78286>	...SPACER,SLEEVE.....		EA		1	*	*	*		*	169	70
						RPLS-- 1560-575-1989											
P	F		1560-562-2860	S1630-80802	<78286>	..LEVER ASSEMBLY,MIXTURE.....		EA		1	2	2	3		*	169	71
						CONTROL											
P	F		3110-142-4456	AN201KP4A	<88044>	...BEARING,BALL,AIRFRAME.....		EA		2	*	*	*		REF	169	72
P	F		1560-657-2911	S1630-80802-3	<78286>	...SPACER,SLEEVE.....		EA		1	*	*	*		*	169	73
			3020-288-3411	MS20219A2	<96906>	..PULLEY,GROOVE.....		EA		4	*	*	*		*	169	74

(1) SOURCE, MAINT AND REC CODE (a) SOURCE CODE	(b) MAINT LEVEL	(c) REC CODE	(2) FEDERAL STOCK NUMBER	REFERENCE NUMBER	(3) DESCRIPTION	MODELS USABLE ON CH-34C	(4) UNIT OF ISSUE	(5) QTY INC IN UNIT PACK	(6) QTY INC IN UNIT	(7) 30-DAY DS GS MAINT ALW (a) 1-20	(b) 21-50	(c) 51-100	(8) 1-YR ALW PER 100 EQUIP CNTGCY	(9) DEPOT MAINT ALW PER 100 EQUIP	(10) ILLUSTRATION (a) FIG NO	(b) ITEM NO
					CONTINUED										169	74
					ATTACHING PARTS											
			5306-151-1060	AN174H42 <88044>	..BOLT,MACHINE.....		EA		1	*	*	*		*	169	75
			5310-167-0835	AN960-416L <88044>	..WASHER,FLAT.....		HD		2	*	*	*		*	169	
			5310-167-1285	AN310-4 <88044>	..NUT,CASTELLATED,HEXAGON....		HD		1	*	*	*		*	169	
			5315-234-1856	MS24665-155 <96906>	..PIN,COTTER.....		HD		1	*	*	*		*	169	
					---*---											
			5340-825-6469	NAS43DD4-56 <80205>	..SPACER.....		EA		1	*	*	*		*	169	76
MF	F			NAS43DD4-23 <80205>	..SPACER,SLEEVE.....		EA		1						169	77
					MAKEFR											
					AR 5340-632-1254 AL ALLY SH											
P	F		1560-701-4709	S1630-80800-5 <78286>	..SHIM,LAMINATED.....		EA		1	REF	REF	REF		REF	169	78
			5310-167-0766	AN970-4 <88044>	..WASHER,FLAT.....		HD		1	*	*	*		*	169	78A
P	F		1560-701-4709	S1630-80800-5 <78286>	..SHIM,LAMINATED.....		EA		1	REF	REF	REF		REF	169	80
			5310-167-0766	AN970-4 <88044>	..WASHER,FLAT.....		HD		1	*	*	*		*	169	80A
		R	1560-627-3979	S1630-80816-8 <78286>	..PLATE ASSEMBLY-SIDE.....		EA			*	*	*			169	
					RPL-BY 1560-672-9446											
P	F		1560-672-9446	S1630-80816-12 <78286>	..PLATE ASSEMBLY-SIDE.....		EA		1	*	2	2		*	169	81
					RPLS-- 1560-560-5392,											
					1560-591-6641,&											
					1560-627-3979											
P	F		1560-672-9447	S1630-80816-13 <78286>	..SIDE PLATE ASSEMBLY.....		EA		1	*	*	2		*	169	82
					RPLS-- 1560-560-5393,											
					1560-625-9358,&											
					1560-627-3980											
					ATTACHING PARTS											
			5306-182-2058	AN3H5A <88044>	..BOLT,MACHINE.....		EA		8	*	*	*		*	169	83
			5310-167-0753	AN960PD10L <88044>	..WASHER,FLAT.....		HD		15	*	*	*		*	169	
			5310-263-2862	MS21045C3 <96906>	..NUT,SELF-LOCKING,HEXAGON...		HD		7	*	*	*		*	169	
					---*---											
P	F		1560-633-6939	S1630-80829 <78286>	...BUSHING,SLEEVE.....		EA		3	*	2	2		*	169	84
					ATTACHING PARTS											
				MS20426AD4 <96906>	...RIVET.....		EA		3						169	85
					---*---											
			1560-633-6940	S1630-80830 <78286>	...BRACKET.....		EA		4	*	*	*			169	86
					ATTACHING PARTS											
				MS20470AD4 <96906>	...RIVET.....		EA		6						169	87
				MS20470AD4 <96906>	...RIVET U/O.....		EA		3						169	88
					1560-672-9446											
				MS20426AD4 <96906>	...RIVET U/O.....		EA		3						169	89
					1560-672-9447											
					---*---											
P	F		1560-560-5391	S1630-80814 <78286>	..SUPPORT ASSEMBLY,ENGINE....		EA		1	*	*	*		*	169	90
					CONTROLS											
P	O		1560-672-7386	S1630-80430-3 <78286>	.ROD ASSEMBLY,AIR VALVE.....		EA		1	2	2	3		*	169	91
					RPLS-- 1560-327-3908											
					ATTACHING PARTS											
			5306-655-6145	MS21045C3 <96906>	.BOLT.....		EA		1	*	*	*			169	92
			5310-167-0812	AN960C10L <88044>	.WASHER,FLAT.....		HD		4	*	*	*		*	169	
			5310-263-2862	AN363C1032 <88044>	.NUT,SELF-LOCKING,HEXAGON....		HD		1	*	*	*		*	169	
					---*---											
P	F		3110-173-5075	RE83N2 <21335>	..BEARING,BALL,ROD END.....		EA		2	*	*	*		REF	169	93

(1) SOURCE, MAINT AND REC CODE (a) SOURCE CODE	(b) MAINT LEVEL	(c) REC CODE	(2) FEDERAL STOCK NUMBER	REFERENCE NUMBER		(3) DESCRIPTION	MODELS USABLE ON CH-34C	(4) UNIT OF ISSUE	(5) QTY INC IN UNIT PACK	(6) QTY INC IN UNIT	(7) 30-DAY DS/GS MAINT ALW (a) 1-20	(b) 21-50	(c) 51-100	(8) 1-YR ALW PER 100 EQUIP CNTGCY	(9) DEPOT MAINT ALW PER 100 EQUIP	(10) ILLUSTRATION (a) FIG NO	(b) ITEM NO
				S1630-80400-4	<78286>	INDUCTION SYSTEM..... INSTALLATION USBL EFF 55-4462 & SUBSEQUENT SEE FIG.167 FOR NHA										170	
				S1630-80400-2	<78286>	INDUCTION SYSTEM..... INSTALLATION SEE FIG.167 FOR NHA										170	
P	O		1560-563-9928	S1630-80428-1	<78286>	.RETAINER,CUSHION,CARBURETOR.		EA		1	2	4	9		*	170	1
P	O		1560-563-9929	S1630-80428-2	<78286>	.RETAINER,CUSHION,CARBURETOR. ATTACHING PARTS		EA		1	2	4	7		*	170	2
			5306-180-2751	AN5H12	<88044>	.BOLT,MACHINE.....		HD		5	*	*	*		*	170	3
			5310-187-2399	AN960PD516	<88044>	.WASHER,FLAT.....		HD		5	*	*	*		*	170	
						---*---											
P	O		1560-563-9930	S1630-80429	<78286>	.CUSHION,CARBURETOR AIR..... INLET DUCT		EA		1	4	10	20		*	170	4
P	O		1560-304-4609	S1630-80416	<78286>	.BOOT,CARBURETOR AIR INLET... ATTACHING PARTS		EA		1	2	5	10		*	170	5
P	O		4730-062-1174	MS21920-57R	<96906>	.CLAMP,HOSE.....		EA		2	*	*	*		*	170	6
						---*---											
			1560-564-5725	S1630-80424-4	<78286>	.DUCT ASSEMBLY,CARBURETOR.... RPL-BY 1560-591-0549										170	
P	O	R	1560-591-0549	S1630-80424-6	<78286>	.DUCT ASSEMBLY,CARBURETOR.... RPLS-- 1560-346-1169, 1560-564-5725		EA		1	2	3	6		*	170	7
P	O		6685-663-9000	MS28034-2	<96906>	..TRANSMITTER,TEMPERATURE....		EA		1	*	2	2		*	170	8
			5330-815-9489	MS35769-11	<96906>	..GASKET.....		EA		1	REF	REF	REF	REF	*	170	9
			5325-263-6632	MS35489-6	<96906>	..GROMMET,RUBBER.....		HD		1	*	*	*		*	170	10
			5315-234-1856	MS24665-155	<96906>	..PIN,COTTER.....		HD		1	*	*	*		*	170	11
				NAS354-5-580	<80205>	..ROD.....		EA		1						170	12
			1560-563-9932	S1630-80719-6	<78286>	..ROD ASSEMBLY,ENGINE..... CONTROLS RPL-BY 1560-673-7717		EA			*	*	*			170	
P	O		1560-673-7717	S1630-80719-12	<78286>	..ROD ASSEMBLY,ENGINE..... CONTROLS RPLS-- 1560-563-9932 ATTACHING PARTS		EA		1	2	2	4		*	170	
			5306-182-2060	AN3H7A	<88044>	..BOLT,MACHINE.....		HD		1	*	*	*		*	170	13
			5310-167-0818	AN960-10	<88044>	..WASHER,FLAT.....		HD		3	*	*	*		*	170	
			5310-877-5797	MS21044N3	<96906>	..NUT,SELF-LOCKING,HEXAGON...		EA		1	*	*	*		*	170	
			5306-182-2006	AN3H15A	<88044>	..BOLT,MACHINE.....		EA		1	*	*	*		*	170	14
			5310-167-0801	AN960C10	<88044>	..WASHER,FLAT.....		HD		2	*	*	*		*	170	
			5310-167-0812	AN960C10L	<88044>	..WASHER,FLAT.....		HD		1	*	*	*		*	170	
			5310-807-1467	MS21042-3	<96906>	..NUT,SELF-LOCKING,HEXAGON...				1	*	*	*		*	170	
						---*---											
P	F		1560-334-6361	S1630-80413-2	<78286>	..BELL CRANK ASSEMBLY,..... INDUCTION		EA		1	*	*	2		*	170	15

(1) SOURCE MAINT AND REC CODE (a) SOURCE CODE	(b) MAINT CODE	(c) REC CODE	(2) FEDERAL STOCK NUMBER	REFERENCE NUMBER	(3) DESCRIPTION	MODELS USABLE ON CH-34C	(4) UNIT OF ISSUE	(5) QTY INC IN UNIT PACK	(6) QTY INC IN UNIT	(7) 30-DAY DS GS MAINT ALW (a) 1-20	(b) 21-50	(c) 51-100	(8) 1-YR ALW PER 100 EQUIP CNTGCY	(9) DEPOT MAINT ALW PER 100 EQUIP	(10) ILLUSTRATION (a) FIG NO	(b) ITEM NO
					CONTINUED										170	15
					ATTACHING PARTS											
			5315-224-9424	AN386-1-6 <88044>	..PIN,TAPERED,THREADED.....		EA		1	*	*	*		*	170	16
			5310-167-0685	AN975-3 <88044>	..WASHER,RECESSED.....		HD		1	*	*	*		*	170	
			5310-807-1467	MS21042-3 <96906>	..NUT,SELF-LOCKING,HEXAGON...				1	*	*	*		*	170	
					---*---											
			5310-187-2395	AN960PD616L <88044>	..WASHER,FLAT.....		HD		1	*	*	*		*	170	17
P	F		1560-304-4610	S1630-80423 <78286>	..LEVER,VALVE SHAFT.....		EA		1	2	2	3		*	170	18
					INDUCTION,CARBURETOR											
					ATTACHING PARTS											
			5315-224-9424	AN386-1-6 <88044>	..PIN,TAPERED,THREADED.....		EA		1	*	*	*		*	170	19
			5310-167-0685	AN975-3 <88044>	..WASHER,RECESSED.....		HD		1	*	*	*		*	170	
			5310-807-1467	MS21042-3 <96906>	..NUT,SELF-LOCKING,HEXAGON...				1	*	*	*		*	170	
					---*---											
			5310-187-2395	AN960PD616L <88044>	..WASHER,FLAT.....		HD		1	*	*	*		*	170	20
P	F		1560-630-9042	S1630-80432-5 <78286>	..DOOR ASSEMBLY,HOT AND.....		EA		1	*	2	2		*	170	21
					COLD AIR RPLS--											
					1560-570-4881,											
					1560-575-6397											
					ATTACHING PARTS											
			5305-984-6195	MS35206-247 <96906>	..SCREW,MACHINE.....				2	*	*	*		*	170	22
			5310-184-8966	AN960PD8 <88044>	..WASHER,FLAT.....		HD		4	*	*	*		*	170	
			5310-060-2039	MS21044D08 <96906>	..NUT,SELF-LOCKING,HEXAGON...		EA		2	*	*	*		*	170	
					---*---											
				S1630-30438-1 <78286>	...WEAR STRIP.....CODE B		EA		1						170	23
					ATTACHING PARTS											
				MS20426AD3 <96906>	...RIVET.....		EA		1						170	24
				MS20470AD4 <96906>	...RIVET.....		EA		3						170	
					---*---											
P	F		1560-570-4880	S1630-80410-2 <78286>	..SHAFT ASSEMBLY,CARBURETOR..		EA		1	*	2	2		*	170	28
					AIR INTAKE											
P	D		1560-630-9041	S1630-80411-7 <78286>	..DOOR ASSEMBLY,HOT AND.....		EA		1	*	2	2		*	170	29
					COLD AIR CODE B											
					ATTACHING PARTS											
			5305-984-6195	MS35206-247 <96906>	..SCREW,MACHINE.....		HD		3	*	*	*		*	170	30
			5310-184-8966	AN960PD8 <88044>	..WASHER,FLAT.....		HD		6	*	*	*		*	170	
			5310-060-2039	MS21044D08 <96906>	..NUT,SELF-LOCKING,HEXAGON...		EA		3	*	*	*		*	170	
					---*---											
P	D		1560-622-6359	S1630-80410-6 <78286>	..BAR.....		EA		1	*	2	2		*	170	31
P	F		1560-570-4879	S1630-80410-1 <78286>	..SHAFT ASSEMBLY,CARBURETOR..		EA		1	*	*	2		*	170	32
					AIR INTAKE											
X1				S1630-80425-33 <78286>	..DUCT ASSEMBLY,CARBURETOR...		EA		1						170	35
					WHEN EXHTD RQTN NHA											
					1560-591-0549											
			1560-699-4371	S1630-80433 <78286>	...SHIELD ASSEMBLY,.....										170	
					CARBURETOR AIR INTAKE											
					RPL-BY 1560-592-8168											
P	F		1560-592-8168	S1630-80433-1 <78286>	...SHIELD,CARBURETOR,INTAKE..		EA		1	*	*	*		*	170	36
					RPLS-- 1560-699-4371											
					ATTACHING PARTS											
				MS20470AD4 <96906>	...RIVET.....		EA		17						170	37
					---*---											

(1) SOURCE, MAINT AND REC CODE (a) SOURCE CODE	(b) MAINT LEVEL	(c) REC CODE	(2) FEDERAL STOCK NUMBER	REFERENCE NUMBER		(3) DESCRIPTION	MODELS USABLE ON CH-34C	(4) UNIT OF ISSUE	(5) QTY INC IN UNIT PACK	(6) QTY INC IN UNIT	(7) 30-DAY DS/GS MAINT ALW (a) 1-20	(b) 21-50	(c) 51-100	(8) 1-YR ALW PER 100 EQUIP CNTGCY	(9) DEPOT MAINT ALW PER 100 EQUIP	(10) ILLUSTRATION (a) FIG NO	(b) ITEM NO
P	F		1560-560-9144	S1630-80431	<78286>	...BUSHING,SLEEVE.....		EA		2	5	13	25		*	170	38
P	F		3120-528-5637	F589	<70417>	...BEARING,SLEEVE.....		EA		2	*	*	*		*	170	38A
P	O		1560-563-9930	S1630-80429	<78286>	.CUSHION,CARBURETOR AIR..... INLET DUCT		EA		1	REF	REF	REF		REF	170	39
P	O		1560-554-1050	S1630-80427	<78286>	.SPACER,SLEEVE.....		EA		10	8	20	41		*	170	40
			1560-098-1576	S1630-80332	<78286>	.WELL ASSEMBLY.....				1						170	
P	O		1560-564-1510	S1630-80332-4	<78286>	.WELL ASSEMBLY.....		EA		1	2	2	5		*	170	41
P	O		1560-670-3024	S1630-80402	<78286>	.ELBOW ASSEMBLY,CARBURETOR... AIR INTAKE		EA		1	*	*	2		*	170	42
P	F		5325-291-0217	4002-5W	<71286>	..STUD ASSEMBLY,TURNLOCK..... FASTENER		EA		15	*	*	*		*	170	
P	O		2945-654-1480	121064	<00736>	.FILTER ASSEMBLY..... RPLS-- 2945-623-5939 CODE A USBL EFF 53-4475 THRU 54-4483 CODE B USBL EFF 57-1710 & SUBSEQUENT		EA		1	2	6	12		*	170	43
				S1630-80900-3	<78286>	COLLECTOR INSTALLATION SEE.. FIG.167 FOR NHA										171	
P	O		1560-703-9639	S1630-80903-31	<78286>	.CLAMP ASSEMBLY RPLS--..... 1560-332-3541, 4730-142-2651,& 4730-532-7391 ATTACHING PARTS		EA		2	2	3	7		*	171	1
			5306-182-1865	AN4CH20A	<88044>	.BOLT,MACHINE.....		EA		2	*	*	*		*	171	2
			5310-531-9515	AN960C416	<88044>	.WASHER,FLAT.....		HD		2	*	*	*		*	171	
			5310-982-4988	MS21045C4	<96906>	.NUT,SELF-LOCKING,HEXAGON.... ---*---		HD		2	*	*	*		*	171	
P	O		1560-700-5326	S1630-80903-32	<78286>	.CLAMP ASSEMBLY RPLS--..... 4730-142-2654, 4730-532-7392 ATTACHING PARTS		EA		2	2	4	8		*	171	3
			5306-182-1865	AN4CH20A	<88044>	.BOLT,MACHINE.....		EA		2	*	*	*		*	171	4
			5310-531-9515	AN960C416	<88044>	.WASHER,FLAT.....		HD		2	*	*	*		*	171	
			5310-982-4988	MS21045C4	<96906>	.NUT,SELF-LOCKING,HEXAGON.... ---*---		HD		2	*	*	*		*	171	
P	O		1560-703-9641	S1630-80903-33	<78286>	.CLAMP ASSEMBLY..... ATTACHING PARTS		EA		1	2	2	4		*	171	5
			5306-182-1865	AN4CH20A	<88044>	.BOLT,MACHINE.....		EA		2	*	*	*		*	171	6
			5310-531-9515	AN960C416	<88044>	.WASHER,FLAT.....		HD		2	*	*	*		*	171	
			5310-982-4988	MS21045LC4	<96906>	.NUT,SELF-LOCKING,HEXAGON.... ---*---		HD		2	*	*	*		*	171	
P	O		1560-703-9642	S1630-80903-34	<78286>	.CLAMP ASSEMBLY RPLS--..... 1560-326-3487, 4730-142-2649,& 4730-532-7394		EA		1	2	6	12		*	171	7

(1) SOURCE, MAINT AND REC CODE (a) SOURCE CODE	(b) MAINT LEVEL	(c) REC CODE	(2) FEDERAL STOCK NUMBER	REFERENCE NUMBER	(3) DESCRIPTION	MODELS USABLE ON CH-34C	(4) UNIT OF ISSUE	(5) QTY INC IN UNIT PACK	(6) QTY INC IN UNIT	(7) 30-DAY DS GS MAINT ALW (a) 1-20	(b) 21-50	(c) 51-100	(8) 1-YR ALW PER 100 EQUIP CNTGCY	(9) DEPOT MAINT ALW PER 100 EQUIP	(10) ILLUSTRATION (a) FIG NO	(b) ITEM NO
					CONTINUED										171	7
					ATTACHING PARTS											
			5306-182-1865	AN4CH20A <88044>	.BOLT,MACHINE.....		EA		2	*	*	*		*	171	8
			5310-531-9515	AN960C416 <88044>	.WASHER,FLAT.....		HD		2	*	*	*		*	171	
			5310-982-4988	MS21045C4 <96906>	.NUT,SELF-LOCKING,HEXAGON....		HD		2	*	*	*		*	171	
					---*---											
			1560-532-7395	S1630-80903-30 <78286>	.CLAMP ASSEMBLY RPL-BY..... 1560-700-5327		EA			*	*	*			171	
P	O		1560-700-5327	S1630-80903-35 <78286>	.CLAMP ASSEMBLY RPLS--..... 1560-332-3544, 1560-532-7395,& 4730-142-2650		EA		1	2	3	6		*	171	9
					ATTACHING PARTS											
			5306-182-1865	AN4CH20A <88044>	.BOLT,MACHINE.....		EA		2	*	*	*		*	171	10
			5310-531-9515	AN960C416 <88044>	.WASHER,FLAT.....		HD		2	*	*	*		*	171	
			5310-982-4988	MS21045C4 <96906>	.NUT,SELF-LOCKING,HEXAGON....		HD		2	*	*	*		*	171	
					---*---											
AF	O			S1630-80901-39 <78286>	.COLLECTOR ASSEMBLY,EXHAUST.. RPLS-- 1560-575-6405 1560-575-6408		EA		1						171	11
			1560-326-3482	S1630-80901-1 <78286>	..SECTION ASSEMBLY RPL-BY... 1560-332-6544										171	
P	O		1560-332-6544	S1630-80901-45 <78286>	..SECTION ASSEMBLY RPLS--... 1560-326-3482		EA		1	*	2	2		*	171	12
			1560-326-3483	S1630-80901-2 <78286>	..SECTION ASSEMBLY,POWER..... RPL-BY 1560-332-6545										171	
P	O		1560-332-6545	S1630-80901-46 <78286>	..SECTION ASSEMBLY,POWER..... RPLS-- 1560-326-3483		EA		1	*	*	*		*	171	13
			1560-332-3538	S1630-80901-3 <78286>	..SECTION ASSEMBLY RPL-BY... 1560-332-6546										171	
P	O		1560-332-6546	S1630-80901-47 <78286>	..SECTION ASSEMBLY,POWER..... PLANT RPLS-- 1560-332-3538		EA		1	2	2	3		*	171	14
P	O		1560-563-9937	S1630-80901-40 <78286>	..SECTION ASSEMBLY,POWER..... PLANT		EA		1	*	*	2		*	171	15
P	O		1560-332-6558	S1630-80901-48 <78286>	..SECTION ASSEMBLY,POWER..... PLANT RPLS-- 1560-332-3539		EA		1	*	2	2		*	171	16
P	O		1560-332-6547	S1630-80901-49 <78286>	..PIPE ASSEMBLY,POWER PLANT.. RPLS-- 1560-332-3540 OBSLTS 1560-323-4358		EA		1	*	2	2		*	171	17
				S1630-80901-30 <78286>	...SECTION ASSEMBLY U/O..... PN S1630-80901-6		EA		1						171	18
X1				S1630-80901-73 <78286>	...PIPE SECTION ASSEMBLY..... U/O PN S1630-80901-6		EA		1						171	19
X1				S1630-80901-31 <78286>	...SECTION ASSEMBLY WHEN.... EXHTD RQTN NHA 1560-332-6547		EA		1						171	20
			1560-326-3485	S1630-80901-7 <78286>	..SECTION ASSEMBLY RPL-BY... 1560-332-6548										171	
P	O		1560-332-6548	S1630-80901-50 <78286>	..SECTION ASSEMBLY,POWER..... RPLS-- 1560-326-3485		EA		1	2	2	3		*	171	21

(1) SOURCE, MAINT AND REC CODE (a) SOURCE CODE	(b) MAINT LEVEL	(c) REC CODE	(2) FEDERAL STOCK NUMBER	REFERENCE NUMBER		(3) DESCRIPTION	MODELS USABLE ON CH-34C	(4) UNIT OF ISSUE	(5) QTY INC IN UNIT PACK	(6) QTY INC IN UNIT	(7) 30-DAY DS GS MAINT ALW (a) 1-20	(b) 21-50	(c) 51-100	(8) 1-YR ALW PER 100 EQUIP CNTGCY	(9) DEPOT MAINT ALW PER 100 EQUIP	(10) ILLUSTRATION (a) FIG NO	(b) ITEM NO
			1560-326-3486	S1630-80901-8	<78286>	..SECTION ASSEMBLY RPL-BY... 1560-332-6549										171	
P	O		1560-332-6549	S1630-80901-51	<78286>	..SECTION ASSEMBLY,POWER..... RPLS-- 1560-326-3486		EA		1	*	*	*		*	171	22
X1				S1630-80901-71	<78286>	..SECTION ASSEMBLY,POWER.....		EA		1						171	
				S1630-80311	<78286>	COOLING SYSTEM INSTALLATION.. SEE FIG.167 FOR NHA										172	
P	O	R	1560-601-0301	S1630-80351-14	<78286>	.PANEL ASSEMBLY,COOLING..... SYSTEM RPLS-- 1560-098-1583		EA		1	*	2	2		*	172	1
			5315-081-7875	MS20392-3C25	<96906>	..PIN,STRAIGHT,HEADED.....		EA		4	*	*	*		*	172	2
			5310-141-1795	AN960-416	<88044>	..WASHER,FLAT.....		HD		4	*	*	*		*	172	
			5315-234-1851	MS24665-24	<96906>	..PIN,COTTER.....				4	*	*	*		*	172	
P	F		1560-564-1515	S1630-80314-25	<78286>	..SEAL ASSEMBLY,COWLING PANEL		EA		1	2	3	6		*	172	3
X1				S14-30-5435	<78286>	..BRACKET,ANGLE..... RPL-BY 1560-790-3645										172	4
P	F		1560-790-3645	SS1074	<78286>	..BRACKET,POWER PLANT..... RPLS-- 1560-346-3835		EA		1	*	*	2		*	172	4
P	F		5325-141-3291	244-16S	<71286>	...RECEPTACLE,TURNLOCK..... FASTENER		EA		15	*	*	*		REF	172	7
			1650-098-2011	S1630-80353	<78286>	.PANEL ASSEMBLY,..... INTERMEDIATE COWL RPL-BY 1560-591-6576										172	
P	O		1560-591-6576	S1630-80353-8	<78286>	.PANEL ASSEMBLY,..... INTERMEDIATE COWL RPLS-- 1650-098-2011		EA		2	2	2	3		*	172	20
P	F		1615-564-5718	S1630-80314-24	<78286>	..SEAL ASSEMBLY,COWLING PANEL		EA		1	2	4	7		*	172	21
			1560-373-7070	S14-30-5433	<78286>	..CATCH,COWL,POWER PLANT..... COOLING SYSTEM RPL-BY 1560-440-3367		EA			*	*	*			172	
P	O		1560-440-3367	SS5030-1	<78286>	..ELBOW,CYLINDER RPLS--..... 1560-373-7070 ATTACHING PARTS		EA		4	*	*	2		*	172	22
			5310-543-4443	MS20364-428A	<96906>	..NUT,SELF-LOCKING,HEXAGON... ---*---		HD		4	*	*	*		*	172	23
P	F		1560-098-8261	S530975-2	<78286>	..HANDLE,POWER PLANT,COOLING. ATTACHING PARTS		EA		4	*	*	*		*	172	24
			5315-989-7631	MS20392-2C7	<96906>	..PIN,STRAIGHT,HEADED.....		EA		8	*	*	*		*	172	25
			5310-167-0818	AN960-10	<88044>	..WASHER,FLAT.....		HD		8	*	*	*		*	172	
			5315-234-1851	MS24665-24	<96906>	..PIN,COTTER..... ---*---				8	*	*	*		*	172	
P	F		1560-336-0394	S14-30-5437	<78286>	..TRUNNION,POWER PLANT..... COOLING SYSTEM		EA		4	*	*	2		*	172	26
P	F		1560-327-3841	S14-30-5434	<78286>	..SPRING,COWL,POWER PLANT.... ATTACHING PARTS		EA		4	2	2	3		*	172	27
P	F		1560-346-3836	S14-30-5436	<78286>	..BRACKET,ANGLE.....		EA		4	*	*	*		*	172	29

(1) SOURCE MAINT AND REC CODE (a)	(b)	(c)	(2) FEDERAL STOCK NUMBER	REFERENCE NUMBER		(3) DESCRIPTION	MODELS USABLE ON CH-34C	(4) UNIT OF ISSUE	(5) QTY INC IN UNIT PACK	(6) QTY INC IN UNIT	(7) 30 DAY DS/GS MAINT ALW (a) 1-20	(b) 21-50	(c) 51-100	(8) 1-YR ALW PER 100 EQUIP CNTGCY	(9) DEPOT MAINT ALW PER 100 EQUIP	(10) ILLUSTRATION (a) FIG NO	(b) ITEM NO
P	F		1560-591-0547	S1630-80372	<78286>	..RELEASE ASSEMBLY,COOLING... SYSTEM ATTACHING PARTS		EA		4	2	2	4		*	172	30
			5315-989-7631	MS20392-2C7	<96906>	..PIN,STRAIGHT,HEADED.....		EA		8	*	*	*		*	172	31
			5310-167-0818	AN960-10	<88044>	..WASHER,FLAT.....		HD		8	*	*	*		*	172	
			5315-234-1851	MS24665-24	<96906>	..PIN,COTTER.....				8	*	*	*		*	172	
						---*---											
P	F		1560-591-0548	S1630-80377	<78286>	...SPRING,COOLING SYSTEM.....		EA		4	*	*	*		*	172	32
X1				S1630-80374	<78286>	...TRUNNION,COOLING SYSTEM...		EA		4						172	33
X1				S1630-80376	<78286>	...LOCK.....		EA		4						172	34
			5310-167-0818	AN960-10	<88044>	...WASHER,FLAT.....		HD		4	*	*	*		*	172	35
X1				S1630-80373	<78286>	...HANDLE,COOLING SYSTEM.....		EA		4						172	36
P	F		1560-672-3534	S1630-80375	<78286>	..CHANNEL,COWL PANEL ASSEMBLY ATTACHING PARTS		EA		4	*	*	2		*	172	37
				MS20470AD6	<96906>	..RIVET.....		EA		8						172	38
						---*---											
			1560-520-6313	S1630-80361-1	<78286>	.COWL ASSEMBLY RPL-BY..... 1560-571-6231		EA			*	*	*			172	
P	O	R	1560-571-6231	S1630-80361-21	<78286>	.COWL ASSEMBLY RPLS--..... 1560-520-6313		EA		1	*	2	2		*	172	39
			5315-081-7875	MS20392-3C25	<96906>	..PIN,STRAIGHT,HEADED.....		EA		4	*	*	*		*	172	40
			5310-141-1795	AN960-416	<88044>	..WASHER,FLAT.....		HD		8	*	*	*		*	172	
			5315-234-1851	MS24665-24	<96906>	..PIN,COTTER.....				4	*	*	*		*	172	
P	F		1560-564-1516	S1630-80314-27	<78286>	..SEAL ASSEMBLY,COWLING..... PANEL RPLS-- 1560-098-1575		EA		1	2	2	3		*	172	41
			1560-346-3835	S14-30-5435	<78286>	..BRACKET,ANGLE..... RPL-BY 1560-790-3645										172	
P	F		1560-790-3645	SS1074	<78286>	..BRACKET,POWER PLANT..... RPLS-- 1560-346-3835		EA		1	*	*	REF		REF	172	42
			1560-346-3835	S14-30-5435	<78286>	..BRACKET,ANGLE..... RPL-BY 1560-790-3645										172	
P	F		1560-790-3645	SS1074	<78286>	..BRACKET,POWER PLANT..... RPLS-- 1560-346-3835		EA		1	*	*	REF		REF	172	44
P	F		1560-960-8903	S1630-80351-7	<78286>	..SEAL,COOLING SYSTEM..... ATTACHING PARTS		EA		1	2	3	6		*	172	47
				MS20470AD4	<96906>	..RIVET.....		EA		14						172	48
						---*---											
X1				S1630-80361-10	<78286>	..SEAL,COWL ASSEMBLY.....		EA		1						172	52
P	O		1560-010-0403	S1630-80361-9	<78286>	..SEAL,COWL ASSEMBLY..... ATTACHING PARTS		EA		1	*	2	2		*	172	53
				MS20470AD4	<96906>	..RIVET.....		EA		5						172	54
						---*---											
				S1630-80355-15	<78286>	...BEAD.....		EA		1						172	60
P	O		1560-608-1834	S1630-80361-26	<78286>	.COWL ASSEMBLY,COOLING..... SYSTEM INSTALLATION ENGINE RPLS-- 1560-520-6314 & 1560-571-6232		EA		1	*	2	2		*	172	64
			5315-081-7875	MS20392-3C25	<96906>	..PIN,STRAIGHT,THREADED.....		EA		2	*	*	*		*	172	65
			5310-141-1795	AN960-416	<88044>	..WASHER,FLAT.....		HD		4	*	*	*		*	172	
			5315-234-1851	MS24665-24	<96906>	..PIN,COTTER.....				2	*	*	*		*	172	
P	F		1560-564-1517	S1630-80314-26	<78286>	..SEAL ASSEMBLY.....		EA		1	2	2	3		*	172	66

(1) SOURCE, MAINT AND REC CODE (a) SOURCE CODE	(b) MAINT LEVEL	(c) REC CODE	(2) FEDERAL STOCK NUMBER	REFERENCE NUMBER	(3) DESCRIPTION	MODELS USABLE ON CH-34C	(4) UNIT OF ISSUE	(5) QTY INC IN UNIT PACK	(6) QTY INC IN UNIT	(7) 30-DAY DS/GS MAINT ALW (a) 1-20	(b) 21-50	(c) 51-100	(8) 1-YR ALW PER 100 EQUIP CNTGCY	(9) DEPOT MAINT ALW PER 100 EQUIP	(10) ILLUSTRATION (a) FIG NO	(b) ITEM NO
P	O		1560-440-3367	SS5030-1 <78286>	..ELBOW,CYLINDER RPLS--..... 1560-373-7070 ATTACHING PARTS		EA		2	*	*	REF		REF	172	67
			5310-543-4443	MS20364-428A <96906>	..NUT,SELF-LOCKING,HEXAGON... ---*---		HD		1	*	*	*		*	172	68
P	F		1560-098-8261	S530975-2 <78286>	..HANDLE,POWER PLANT,COOLING. ATTACHING PARTS		EA		2	*	*	*		REF	172	69
			5315-989-7631	MS20392-2C7 <96906>	..PIN,STRAIGHT,HEADED.....		EA		2	*	*	*		*	172	70
			5310-167-0818	AN960-10 <88044>	..WASHER,FLAT.....		HD		2	*	*	*		*	172	
			5315-234-1851	MS24665-24 <96906>	..PIN,COTTER..... ---*---				2	*	*	*		*	172	
P	F		1560-336-0394	S14-30-5437 <78286>	..TRUNNION,POWER PLANT..... COOLING SYSTEM		EA		2	*	*	REF		REF	172	71
P	F		1560-327-3841	S14-30-5434 <78286>	..SPRING,COWL,POWER PLANT.... ATTACHING PARTS		EA		2	REF	REF	REF		REF	172	72
P	F		1560-346-3836	S14-30-5436 <78286>	..BRACKET,ANGLE.....		EA		2	*	*	*		REF	172	74
P	F		1560-591-0547	S1630-80372 <78286>	..RELEASE ASSEMBLY,COOLING... SYSTEM ATTACHING PARTS		EA		2	REF	REF	REF		REF	172	75
			5315-989-7631	MS20392-2C7 <96906>	..PIN,STRAIGHT,HEADED.....		EA		2	*	*	*		*	172	76
			5310-167-0818	AN960-10 <88044>	..WASHER,FLAT.....		HD		2	*	*	*		*	172	
			5315-234-1851	MS24665-24 <96906>	..PIN,COTTER..... ---*---				2	*	*	*		*	172	
P	F		1560-591-0548	S1630-80377 <78286>	...SPRING,COOLING SYSTEM.....		EA		2	*	*	*		REF	172	77
X1				S1630-80374 <78286>	...TRUNNION,COOLING SYSTEM...		EA		2						172	78
X1				S1630-80376 <78286>	...LOCK.....		EA		2						172	79
			5310-167-0818	AN960-10 <88044>	...WASHER,FLAT.....		HD		2	*	*	*		*	172	80
X1				S1630-80373 <78286>	...HANDLE,COOLING SYSTEM.....		EA		2						172	81
P	F		1560-672-3534	S1630-80375 <78286>	..CHANNEL,COWL PANEL..... ASSEMBLY		EA		2	*	*	REF		REF	172	82
P	F		1560-960-8903	S1630-80351-7 <78286>	..SEAL,COOLING SYSTEM..... ATTACHING PARTS		EA		1	REF	REF	REF		REF	172	87
				MS20470AD4 <96906>	..RIVET..... ---*---		EA		14						172	88
P	O		1560-693-8820	S1630-80349-1 <78286>	.COVER CONTRAVANE MOUNTING... ASSEMBLY ATTACHING PARTS		EA		6	2	4	7		*	172	91
			5305-054-6670	MS51957-45 <88044>	.SCREW,MACHINE.....		EA		4	*	*	*		*	172	92
			5310-685-3744	AN960C8 <88044>	.WASHER,FLAT..... ---*---		HD		4	*	*	*		*	172	
			1560-098-1573	S1630-80309-2 <78286>	.CONTRAVANE ASSEMBLY..... RPL-BY PN S1630-80385										172	
			1560-323-4351	S1630-80309-3 <78286>	.CONTRAVANE ASSEMBLY..... RPL-BY PN S1630-80385										172	
			1560-587-6381	S1630-80309-5 <78286>	.CONTRAVANE ASSEMBLY..... RPL-BY PN S1630-80385										172	
			1560-572-2081	S1630-80309-6 <78286>	.CONTRAVANE ASSEMBLY..... RPL-BY PN S1630-80385										172	
AF	F			S1630-80385 <78286>	.CONTRAVANE AND FAN SHROUD... ASSEMBLY RPLS-- 1560-098-1573, 1560-323-4351,		EA		1						172	93

(1) SOURCE, MAINT AND REC CODE (a) SOURCE CODE	(b) MAINT LEVEL	(c) REC CODE	(2) FEDERAL STOCK NUMBER	REFERENCE NUMBER	(3) DESCRIPTION	MODELS USABLE ON CH-34C	(4) UNIT OF ISSUE	(5) QTY INC IN UNIT PACK	(6) QTY INC IN UNIT	(7) 30-DAY DS GS MAINT ALW (a) 1-20	(b) 21-50	(c) 51-100	(8) 1-YR ALW PER 100 EQUIP CNTGCY	(9) DEPOT MAINT ALW PER 100 EQUIP	(10) ILLUSTRATION (a) FIG NO	(b) ITEM NO
					CONTINUED										172	93
					1560-532-7396,											
					1560-572-2081,&											
					1560-587-6381											
					ATTACHING PARTS											
			5310-187-2400	AN960PD616 <88044>	.WASHER,FLAT.....		HD		8	*	*	*		*	172	94
			5310-950-0039	MS21044N6 <96906>	.NUT,SELF-LOCKING,HEXAGON....		HD		8	*	*	*		*	172	
					---*---											
P	F	R	1560-673-3813	S1630-80385-2 <78286>	..CONTRAVANE ASSEMBLY.....		EA		1	2	2	4		*	172	
					ENGINE											
				S1630-80317-2 <78286>	..ANGLE.....		EA		1						172	
P	F		1560-658-2903	S1630-80383-1 <78286>	..STRIP,CHAFFING.....		EA		1	4	11	22		*	172	
			5306-281-8936	AN3DDH4A <88044>	..BOLT,MACHINE.....		EA		AR	*	*	*		*	172	
			5310-167-0753	AN960PD10L <88044>	..WASHER,FLAT.....		HD		1	*	*	*		*	172	
			5310-877-5798	MS21044D3 <96906>	..NUT,SELF-LOCKING,HEXAGON...		EA		1	*	*	*		*	172	
P	F		1560-633-6472	S1630-80317-5 <78286>	..SEAL ASSEMBLY RPLS--.....		EA		1	2	2	4		*	172	95
					1560-544-8621											
					ATTACHING PARTS											
			5306-281-8936	AN3DDH4A <88044>	..BOLT,MACHINE.....		EA		24	*	*	*		*	172	96
			5310-167-0753	AN960PD10L <88044>	..WASHER,FLAT.....		HD		48	*	*	*		*	172	
			5310-877-5798	MS21044LD3 <96906>	..NUT,SELF-LOCKING,HEXAGON...		EA		24	*	*	*		*	172	
					---*---											
P	F		1560-566-2416	S1630-80317-3 <78286>	...RETAINER,SEAL,FAN SHROUD..		EA		4	*	2	2		*	172	97
					ATTACHING PARTS											
			5320-582-3494	MS2060AD4W4 <96906>	...RIVET,BLIND.....		VC		18	*	*	*		*	172	98
					---*---											
P	F		1560-633-0888	S1630-80378-1 <78286>	...SEAL,FAN SHROUD.....CODE E		EA		1	3	7	15		*	172	99
P	F		1560-658-2903	S1630-80383-1 <78286>	..STRIP,CHAFING.....		EA		1	REF	REF	REF		*	172	100
P	F		1560-590-0358	S1630-80308-1 <78286>	..VANE,ENGINE COOLING.....		EA		72	2	2	5		*	172	105
P	F	R	1560-673-3813	S1630-80385-2 <78286>	...CONTRAVANE ASSEMBLY,.....		EA		1	REF	REF	REF		REF	172	106
					ENGINE											
P	F		1560-346-3837	S1530-80310 <78286>	....FITTING,COOLING SYSTEM...		EA		8	*	2	2		*	172	107
					ATTACHING PARTS											
			5306-182-2057	AN3H4A <88044>	....BOLT,MACHINE.....		HD		2	*	*	*		*	172	108
			5310-183-4406	AN960PD10 <88044>	....WASHER,FLAT.....		HD		2	*	*	*		*	172	
			5310-807-1467	MS21042-3 <96906>	....NUT,SELF-LOCKING,HEXAGON.				2	*	*	*		*	172	
					---*---											
P	F		1560-346-3837	S1530-80310 <78286>	....FITTING,COOLING SYSTEM...		EA		1	*	REF	REF		REF	172	109
					ATTACHING PARTS											
			5305-702-0609	MS24694S50 <96906>	....SCREW,MACHINE.....		HD		2	*	*	*		*	172	110
			5310-183-4406	AN960PD10 <88044>	....WASHER,FLAT.....		HD		2	*	*	*		*	172	
			5310-807-1467	MS21042-3 <96906>	....NUT,SELF-LOCKING,HEXAGON.				2	*	*	*		*	172	
					---*---											
P	F		1560-346-3837	S1530-80310 <78286>	....FITTING,COOLING SYSTEM...		EA		1	*	REF	REF		REF	172	111
					ATTACHING PARTS											
			5305-702-0609	MS24694S50 <96906>	....SCREW,MACHINE.....		HD		2	*	*	*		*	172	112
			5310-183-4406	AN960PD10 <88044>	....WASHER,FLAT.....		HD		2	*	*	*		*	172	
			5310-807-1467	MS21042-3 <96906>	....NUT,SELF-LOCKING,HEXAGON.				2	*	*	*		*	172	
					---*---											
					CODE D											
					USBL EFF 55-4489 & SUBSEQUENT											
					CODE E											

(1) SOURCE, MAINT AND REC CODE (a) SOURCE CODE	(b) MAINT LEVEL	(c) REC CODE	(2) FEDERAL STOCK NUMBER	(3) DESCRIPTION REFERENCE NUMBER			MODELS USABLE ON CH-34C	(4) UNIT OF ISSUE	(5) QTY INC IN UNIT PACK	(6) QTY INC IN UNIT	(7) 30-DAY DS/GS MAINT ALW (a) 1-20	(b) 21-50	(c) 51-100	(8) 1-YR ALW PER 100 EQUIP CNTGCY	(9) DEPOT MAINT ALW PER 100 EQUIP	(10) ILLUSTRATION (a) FIG NO	(b) ITEM NO
						CONTINUED USBL EFF 56-4313 & SUBSEQUENT										172	
				S1630-80600-1	<78286>	FUEL SYSTEM INSTALLATION..... SEE FIG.167 FOR NHA										173	
MF	O			S1630-80602-3	<78286>	.TUBE ASSEMBLY,SUPERCHARGER.. MAKEFR AR 4710-278-8727 TUBE 2 EA 4730-287-0292 NUT 2 EA 4730-287-3053 SLEEVE		EA		1						173	1
MF	F			S1630-80602-4	<78286>	..TUBE ASSEMBLY..... MAKEFR AR 4710-278-6398 TUBE 2 EA 4730-287-0292 NUT 2 EA 4730-287-3053 SLEEVE		EA		1						173	4
MF	O			4720EG003-5C0170	<81996>	.HOSE ASSEMBLY,..... TETRAFLUOROETHYLENE MAKEFR AR 4720-857-1736 HOSE 2 EA 4730-952-5530 NIPPLE 2 EA 4730-967-9514 SOCKET 2 EA 4730-967-9522 SLEEVE 2 EA 5340-781-8061 DUST PLUG		EA		1						173	5
MF	O			4720EG003-5C0180	<81996>	.HOSE ASSEMBLY,..... TETRAFLUOROETHYLENE MAKEFR AR 4720-857-1736 HOSE 2 EA 4730-952-5530 NIPPLE 2 EA 4730-967-9514 SOCKET 2 EA 4730-967-9522 SLEEVE 2 EA 5340-781-8061 DUST PLUG		EA		1						173	
MF	O			S1630-80602-1	<78286>	.TUBE ASSEMBLY-SEAL DRAIN.... MAKEFR AR 4710-278-6398 TUBE 2 EA 4730-289-0289 NUT 2 EA 4730-302-8641 SLEEVE		EA		1						173	6
MF	F			S1630-80602-2	<78286>	..TUBE ASSEMBLY..... MAKEFR AR 4710-278-8727 TUBE 2 EA 4730-289-0289 NUT 2 EA 4730-302-8641 SLEEVE		EA		1						173	9
MF	O			4720EG003-4C0260	<81996>	.HOSE ASSEMBLY,..... TETRAFLUOROETHYLENE NOTE 1		EA		1						173	10
MF	O			4720EG003-4C0270	<81996>	.HOSE ASSEMBLY,..... TETRAFLUOROETHYLENE NOTE 1		EA		1						173	

(1) SOURCE, MAINT AND REC CODE (a) SOURCE CODE	(b) MAINT LEVEL	(c) REC CODE	(2) FEDERAL STOCK NUMBER	REFERENCE NUMBER		(3) DESCRIPTION	MODELS USABLE ON CH-34C	(4) UNIT OF ISSUE	(5) QTY INC IN UNIT PACK	(6) QTY INC IN UNIT	(7) 30-DAY DS GS MAINT ALW (a) 1-20	(b) 21-50	(c) 51-100	(8) 1-YR ALW PER 100 EQUIP CNTGCY	(9) DEPOT MAINT ALW PER 100 EQUIP	(10) ILLUSTRATION (a) FIG NO	(b) ITEM NO
P	O		1560-627-2111	S1630-80603-7	<78286>	.HOSE ASSEMBLY RPLS--..... 1560-308-3530		EA		1	2	3	7		*	173	11
P	O		1560-627-2106	S1630-80603-9	<78286>	.HOSE ASSEMBLY-NO.6..... CYLINDER DRAIN		EA		1	2	4	9		*	173	12
			1560-308-3532	S1630-80601-35	<78286>	.HOSE ASSEMBLY-NO.5..... CYLINDER DRAIN RPL-BY 1560-627-2107		EA			*	*	*			173	
P	O		1560-627-2107	S1630-80603-11	<78286>	.HOSE ASSEMBLY-NO.5..... CYLINDER DRAIN RPLS-- 1560-308-3532		EA		1	*	2	2		*	173	13
			1560-308-3533	S1630-80601-37	<78286>	.HOSE ASSEMBLY-NO.4..... CYLINDER DRAIN RPL-BY 1560-626-7387		EA			*	*	*			173	
P	O		1560-626-7387	S1630-80603-13	<78286>	.HOSE ASSEMBLY-NO.4..... CYLINDER DRAIN RPLS-- 1560-308-3533		EA		1	2	4	7		*	173	14
AF	O			S1630-80602-7	<78286>	.TUBE ASSEMBLY-PUMP VENT.....		EA		1						173	15
			4730-287-0289	AN818-4D	<88044>	..NUT,TUBE COUPLING.....		EA		1	*	*	*		*	173	16
			4730-302-8641	MS20819-4D	<96906>	..SLEEVE,FLARED,TUBE FITTING.		EA		1	*	*	*		*	173	17
MF	F			S1630-80602-8	<78286>	..TUBE ASSEMBLY..... MAKEFR AR 4710-278-6398 TUBE 2 EA 4730-287-0292 NUT 2 EA 4730-287-3053 SLEEVE		EA		1						173	18
MF	O			4720EG003-4C0230	<81996>	.HOSE ASSEMBLY,..... TETRAFLUOROETHYLENE NOTE 1 RPLS-- 4720-633-6490		EA		1						173	19
P	F		4730-541-3228	SS4015-1S16S	<78286>	.ELBOW,PIPE TO TUBE.....		EA		1	4	10	19		*	173	20
			1560-626-7383	S1630-80603-19	<78286>	.HOSE ASSEMBLY,..... RPL-BY 4720-780-2773										173	
			4730-186-9962	AN822-16-12D	<88044>	.ELBOW,PIPE TO TUBE.....		EA		1	*	*	*		*	173	
MF	O			4720EG007-16-0410	<81996>	.HOSE ASSEMBLY,..... TETRAFLUOROETHYLENE RPLS-- 1560-626-7383 MAKEFR AR 4720-857-1729 HOSE 2 EA 4730-017-8847 ELBOW 2 EA 4730-017-8661 NIPPLE 2 EA 4730-967-9519 SOCKET 2 EA 4730-967-9527 SLEEVE 2 EA 5340-834-8329 DUST PLUG		EA		1						173	21
P	O		4730-293-7838	014501S4-16D	<00624>	.COUPLING,HALF,SELF-SEALING.. ATTACHING PARTS		EA		1	2	2	4	48	*	173	22
			5305-059-3663	MS51958-67	<96906>	.SCREW,MACHINE.....		EA		6	*	*	*		*	173	23
			5310-167-0753	AN960PD10L	<88044>	.WASHER,FLAT.....		HD		6	*	*	*		*	173	
			5310-807-1467	MS21042-3	<96906>	.NUT,SELF-LOCKING,HEXAGON.... ---*---				6	*	*	*		*	173	
MF	O			4720EG003-16Z0210	<81996>	.HOSE ASSEMBLY,..... TETRAFLUOROETHYLENE MAKEFR AR 4720-857-1729 HOSE 2 EA 4730-017-8661 NIPPLE		EA		1						173	24

(1) SOURCE, MAINT AND REC CODE (a) SOURCE CODE	(b) MAINT LEVEL	(c) REC CODE	(2) FEDERAL STOCK NUMBER	REFERENCE NUMBER		(3) DESCRIPTION	MODELS USABLE ON CH-34C	(4) UNIT OF ISSUE	(5) QTY INC IN UNIT PACK	(6) QTY INC IN UNIT	(7) 30-DAY DS/GS MAINT ALW (a) 1-20	(b) 21-50	(c) 51-100	(8) 1-YR ALW PER 100 EQUIP CNTGCY	(9) DEPOT MAINT ALW PER 100 EQUIP	(10) ILLUSTRATION (a) FIG NO	(b) ITEM NO
						CONTINUED										173	24
						2 EA 4730-967-9516 SOCKET											
						2 EA 4730-967-9527 SLEEVE											
						2 EA 5340-834-8329 DUST PLUG											
MF	O			MS80[illegible]19JA	<96906>	.HOSE ASSEMBLY,..... TETRAFLUOROETHYLENE NOTE 1		EA		1						173	25
MF	O			4720EG003-4C0220	<81996>	.HOSE ASSEMBLY,..... TETRAFLUOROETHYLENE NOTE 1		EA		1						173	26
P	O		4730-203-8143	015501S4-4D	<00624>	.COUPLING,HALF,SELF-SEALING.. ATTACHING PARTS		EA		1	*	*	*		*	173	27
			5305-059-3663	MS51958-67	<96906>	.SCREW,MACHINE.....		EA		6	*	*	*		*	173	28
			5310-167-0753	AN960PD10L	<88044>	.WASHER,FLAT.....		HD		6	*	*	*		*	173	
			5310-807-1467	MS21042-3	<96906>	.NUT,SELF-LOCKING,HEXAGON....				6	*	*	*		*	173	
						---*---											
P	O		4720-868-6985	EAB440	<81996>	.HOSE ASSEMBLY,RUBBER.....		EA		1	*	*	*		*	173	29
MF	O			4720EG003-4C0270	<81996>	.HOSE ASSEMBLY,..... TETRAFLUOROETHYLENE NOTE 1		EA		1						173	
MF	O			4720EG003-4C0220	<81996>	.HOSE ASSEMBLY,..... TETRAFLUOROETHYLENE MAKEFR		EA		1						173	30
						AR 4720-857-1732 HOSE											
						2 EA 4730-952-5532 NIPPLE											
						2 EA 4730-967-9513 SOCKET											
						2 EA 4730-967-9521 SLEEVE											
						2 EA 5340-834-8330 DUST PLUG											
			4730-752-9336	MS24399D6	<96906>	.REDUCER,TUBE.....		EA		2	*	*	*		*	173	31
			5330-804-5695	MS28778-6	<96906>	.PACKING,PREFORMED.....		EA		3	REF	REF	REF		*	173	
			4730-278-3683	AN939D6	<88044>	.ELBOW,BOSS.....		EA		1	*	*	*		*	173	
			5310-282-7817	AN924-6	<88044>	.NUT,PLAIN,HEXAGON.....		EA		1	*	*	*		*	173	32
P	F		4730-773-2600	015501S4-6D	<00624>	.COUPLING,HALF..... ATTACHING PARTS		EA		1	2	2	3		*	173	33
			5305-059-3663	MS51958-67	<96906>	.SCREW,MACHINE.....		EA		6	*	*	*		*	173	34
			5310-167-0753	AN960PD10L	<88044>	.WASHER,FLAT.....		HD		6	*	*	*		*	173	
			5310-807-1467	MS21042-3	<96906>	.NUT,SELF-LOCKING,HEXAGON....				6	*	*	*		*	173	
						---*---											
P	F		1560-629-9595	S1630-80124-10	<78286>	.SUPPORT ASSEMBLY,FUEL..... SUPPLY RPLS-- 1560-563-9800, 1560-633-6473 CODE C ATTACHING PARTS		EA		1	2	3	5		*	173	35
			5306-180-2712	AN5H4	<88044>	.BOLT,MACHINE.....		EA		2	*	*	*		*	173	36
			5310-187-2399	AN960PD516	<88044>	.WASHER,FLAT.....		HD		2	*	*	*		*	173	
						---*---											
			1560-509-4620	S1630-80128-1	<78286>	..WING ASSEMBLY RPL-BY..... 5310-208-2326										173	
P	O		5310-208-2326	WC02	<72962>	..NUT,SELF-LOCKING,WING..... RPLS-- 1560-509-4620		EA		1	*	*	*		*	173	37
P	F		1560-308-0163	S1630-80127-1	<78286>	..BLOCK-LH.....CODE A		EA		1	*	*	*		*	173	38
			5306-638-2221	AN42B10	<88044>	..BOLT,MACHINE.....		EA		1	*	*	*		*	173	40

(1) SOURCE MAINT AND RFC CODE (a)	(b)	(c)	(2) FEDERAL STOCK NUMBER	(3) DESCRIPTION REFERENCE NUMBER			MODELS USABLE ON CH-34C	(4) UNIT OF ISSUE	(5) QTY INC IN UNIT PACK	(6) QTY INC IN UNIT	(7) 30-DAY DS/GS MAINT ALW (a) 1-20	(b) 21-50	(c) 51-100	(8) 1-YR ALW PER 100 EQUIP CNTGCY	(9) DEPOT MAINT ALW PER 100 EQUIP	(10) ILLUSTRATION (a) FIG NO	(b) ITEM NO
						CONTINUED										173	40
						ATTACHING PARTS											
			5315-990-1338	MS20392-2C19	<96906>	..PIN,STRAIGHT,HEADED.....		EA		1	*	*	*		*	173	41
			5310-167-0818	AN960-10	<88044>	..WASHER,FLAT.....		HD		1	*	*	*		*	173	
			5315-234-1856	MS24665-155	<96906>	..PIN,COTTER.....		HD		1	*	*	*		*	173	
						---*---											
X2	F		1560-948-0438	S1630-80124-1	<78286>	..BRACKET ASSEMBLY.....CODE A		EA		1	*	*	*		*	173	42
X1				S1630-80124-9	<78286>	..BRACKET ASSEMBLY.....CODE B		EA		1						173	
X1				S1630-80124-11	<78286>	..BRACKET ASSEMBLY.....CODE C		EA		1						173	
					<96906>	...RIVET.....		EA		2						173	44
						---*---											
P	F		1560-308-3529	S1630-80127-2	<78286>	...BLOCK-RH.....CODE A		EA		1	*	*	*		*	173	45
X1				S1630-80127-6	<78286>	...BLOCK-RH.....CODE B		EA		1						173	
X1				S1630-80127-8	<78286>	...BLOCK-RH.....		EA		1						173	
						ATTACHING PARTS											
				MS20470AD3	<96906>	...RIVET.....		EA		1						173	46
						---*---											
				S1630-80125	<78286>	...BRACKET.....		EA		1						173	
P	F		1560-766-1990	S1630-80605	<78286>	...CLIP,FUEL LINE SUPPORT....		EA		1	*	2	2		*	173	
						CODE A											
						USBL EFF 53-4475 THRU 55-4504											
						CODE B											
						USBL EFF 56-4284 THRU 57-1689											
						CODE C											
						USBL EFF 57-1690 & SUBSEQUENT											
						NOTE 1											
						MAKEFR											
						AR 4720-857-1732 HOSE											
						2 EA 4730-952-5532 NIPPLE											
						2 EA 4730-967-9513 SOCKET											
						2 EA 4730-967-9521 SLEEVE											
						2 EA 5340-834-8330 DUST PLUG											
				S1630-80500	<78286>	LUBRICATION SYSTEM.....										174	
						INSTALLATION SEE FIG.167											
						FOR NHA											
P	D		6685-373-9004	MS28034-1	<96906>	.TRANSMITTER,TEMPERATURE.....		EA		1	REF	REF	REF	REF		174	1
P	D		6685-663-9000	MS28034-2	<96906>	.TRANSMITTER,TEMPERATURE.....		EA		1	*	REF	REF		REF	174	
			5330-815-9489	MS35769-11	<96906>	.GASKET.....		EA		1	REF	REF	REF	REF	*	174	2
P	D		4720-587-6302	S1630-63025-3	<78286>	.HOSE ASSEMBLY,LUBRICATION...		EA		1	2	6	12		*	174	3
						ATTACHING PARTS											
			5310-167-0836	AN960-516L	<88044>	.WASHER,FLAT.....		HD		3	*	*	*		*	174	4
			5310-088-0553	MS21044N5	<96906>	.NUT,SELF-LOCKING,HEXAGON....		HD		3	*	*	*		*	174	
			5306-182-1528	AN4H10	<88044>	.BOLT,MACHINE.....		HD		4	*	*	*		*	174	5
			5310-187-2354	AN960PD416	<88044>	.WASHER,FLAT.....		HD		8	*	*	*		*	174	
			5310-877-5796	MS21044N4	<96906>	.NUT,SELF-LOCKING,HEXAGON....		EA		4	*	*	*		*	174	
						---*---											

(1) SOURCE, MAINT AND REC CODE (a) SOURCE CODE	(b) MAINT LEVEL	(c) REC CODE	(2) FEDERAL STOCK NUMBER	REFERENCE NUMBER		(3) DESCRIPTION	MODELS USABLE ON CH-34C	(4) UNIT OF ISSUE	(5) QTY INC IN UNIT PACK	(6) QTY INC IN UNIT	(7) 30-DAY DS/GS MAINT ALW (a) 1-20	(b) 21-50	(c) 51-100	(8) 1-YR ALW PER 100 EQUIP CNTGCY	(9) DEPOT MAINT ALW PER 100 EQUIP	(10) ILLUSTRATION (a) FIG NO	(b) ITEM NO
			5330-599-1319	AN763-20	<88044>	.GASKET.....		EA		1	*	*	*		*	174	6
P	O		4720-587-6301	S1630-63025-1	<78286>	.HOSE ASSEMBLY,LUBRICATION...		EA		1	2	5	10		*	174	7
						ATTACHING PARTS											
			5310-167-0836	AN960-516L	<88044>	.WASHER,FLAT.....		HD		3	*	*	*		*	174	8
			5310-088-0553	MS21044N5	<96906>	.NUT,SELF-LOCKING,HEXAGON....		HD		3	*	*	*		*	174	
			5306-182-1528	AN4H10	<88044>	.BOLT,MACHINE.....		HD		4	*	*	*		*	174	9
			5310-187-2354	AN960PD416	<88044>	.WASHER,FLAT.....		HD		8	*	*	*		*	174	
			5310-877-5796	MS21044N4	<96906>	.NUT,SELF-LOCKING,HEXAGON....		EA		4	*	*	*		*	174	
						---*---											
			4730-187-0839	AN816-3	<88044>	.ADAPTER,STRAIGHT,PIPE TO....		EA		1	*	*	*		*	174	
						TUBE											
			5330-171-6945	AN763-24	<88044>	.GASKET.....		EA		1	REF	REF	REF		*	174	10
P	O		1560-629-9519	S1630-63026-9	<78286>	.TUBE ASSEMBLY,LUBRICATION...		EA		1	2	2	3		*	174	11
						SYSTEM VENT											
			5310-208-4112	MS24400D16	<96906>	.NUT,PLAIN,HEXAGON.....		EA		1	*	*	*		*	174	12
			5310-183-4356	AN960PD2116	<88044>	.WASHER,FLAT.....		EA		2	*	*	*		*	174	
			4730-279-0122	AN837-16B	<88044>	.ELBOW,TUBE.....		EA		1	*	*	*		*	174	
P	F		1560-509-0494	S1630-80502	<78286>	.COVER,ENGINE BREATHER BATH..		EA		1	*	2	2		*	174	13
MF	O			4720EG003-3C0110	<81996>	.HOSE ASSEMBLY.....		EA		1						174	14
						TETRAFLUOROETHYLENE											
						MAKEFR											
						AR 4720-857-1735 HOSE											
						2 EA 4730-952-5536 NIPPLE											
						2 EA 4730-967-9511 SLEEVE											
						2 EA 4730-967-9512 SOCKET											
						2 EA 5340-881-2676 DUST PLUG											
P	O		1560-676-1663	S1630-63026-7	<78286>	.TUBE ASSEMBLY,LUBRICATION...		EA		1	*	2	2		*	174	15
						SYSTEM ENGINE BREATHER											
			4730-186-9962	AN822-16-12D	<88044>	.ELBOW,TUBE.....		EA		1	*	*	*		*	174	16
			4730-231-3908	AN915-6	<88044>	.ELBOW,PIPE.....		EA		1	*	*	*		*	174	17
P	F		2995-307-6209	AN5025-1	<88044>	.COVER,SHIPPING PAD.....		EA		1	*	*	*		*	174	18
			5330-074-4017	MS9144-01	<96906>	.GASKET,LUBRICATION.....		EA		1	*	*	*		*	174	19
			4730-684-6913	MS24392D16	<96906>	.NIPPLE,TUBE.....		EA		1	*	*	*		*	174	20
P	O		1560-629-9512	S1630-63026-15	<78286>	.TUBE ASSEMBLY,LUBRICATION...		EA		1	2	4	8		*	174	21
						SYSTEM ENGINE BREATHER											
			5340-533-3653	EAB700-16	<81996>	.CLAMP.....		EA		1	*	*	*		*	174	
			5310-208-4112	MS24400D16	<96906>	.NUT,PLAIN,HEXAGON.....		EA		1	*	*	*		*	174	22
			5340-183-4356	AN960PD2116	<88044>	.SPACER,RING.....		EA		2	*	*	*		*	174	
			4730-722-7216	MS24394D16	<96906>	.ELBOW,TUBE.....		EA		1	*	*	*		*	174	
P	F		1560-509-0494	S1630-80502	<78286>	.COVER,ENGINE BREATHER BATH..		EA		1	*	REF	REF		REF	174	23
MF	O			MS 8000 E 190 A	<96906>	.HOSE ASSEMBLY,.....		EA		1						174	24
						TETRAFLUOROETHYLENE											
						MAKEFR											
						AR 4720-857-1732 HOSE											
						2 EA 4730-952-5532 NIPPLE											
						2 EA 4730-967-9513 SOCKET											
						2 EA 4730-967-9521 SLEEVE											
						2 EA 5340-834-8330 DUST PLUG											
P	O		4720-633-6988	S1630-63025-9	<78286>	.HOSE ASSEMBLY,RUBBER.....		EA		1	*	2	2	12	*	174	
				S1630-63025-8	<78286>	..HOSE-ENGINE OIL BREATHER...		EA		1						174	25
P	F		1560-600-3411	S1630-80381	<78286>	.BRACKET,OIL BREATHER.....		EA		AR	*	*	*		*	174	

(1) SOURCE, MAINT AND REC CODE (a) SOURCE CODE	(b) MAINT LEVEL	(c) REC CODE	(2) FEDERAL STOCK NUMBER	REFERENCE NUMBER		(3) DESCRIPTION	MODELS USABLE ON CH-34C	(4) UNIT OF ISSUE	(5) QTY INC IN UNIT PACK	(6) QTY INC IN UNIT	(7) 30-DAY DS GS MAINT ALW (a) 1-20	(b) 21-50	(c) 51-100	(8) 1-YR ALW PER 100 EQUIP CNTGCY	(9) DEPOT MAINT ALW PER 100 EQUIP	(10) ILLUSTRATION (a) FIG NO	(b) ITEM NO
				S1630-80200-1	<78286>	ENGINE ACCESSORIES..... INSTALLATION SEE FIG.167 FOR NHA										175	
P	O		6685-526-8650	AN5541-1	<88044>	.THERMOCOUPLE,CONTACT.....		EA		1	*	*	*		*	175	1
P	O		6685-557-3786	MS24482-1	<96906>	..TRANSMITTER,TEMPERATURE,... ELECTRICAL RESISTANCE		EA		1	2	2	3		*	175	
P	O	R	2915-752-9585	MS29586-1	<96906>	.PUMP,FUEL VANE TYPE..... RPLS--		EA		1	2	4	7	86	*	175	2
		R	2915-289-8412	TF100-2	<59875>	.PUMP,FUEL VANE TYPE..... RPL-BY 2915-752-9585										175	
		R	2915-504-9986	TF3500-2	<59875>	.PUMP,FUEL VANE TYPE..... RPL-BY 2915-752-9585										175	
		R	2915-504-9999	TF800	<59875>	.PUMP,FUEL VANE TYPE..... RPL-BY 2915-752-9585 INTRCH										175	
P	O	R	2915-202-5816	RG5200F	<51663>	.PUMP,FUEL VAN TYPE..... INTRCH 2915-752-9585 SEE FIG.175C FOR BREAKDOWN		EA		1						175	
P	O	R	2915-203-6129	2PR600CWXA2	<77200>	.PUMP,FUEL VANE TYPE..... INTRCH 2915-752-9585		EA		1						175	
P	O	R	2915-203-6129	2PR600CWX2	<77200>	.PUMP,FUEL VANE TYPE..... INTRCH 2915-752-9585		EA		1						175	
P	O	R	2915-486-1645	CE9147	<11599>	.PUMP,FUEL VANE TYPE..... INTRCH 2915-752-9585		EA		1						175	
P	O	R	2915-504-9986	TF3500-4	<59875>	.PUMP,FUEL VANE TYPE..... INTRCH 2915-752-9585 SEE FIG.175G FOR BREAKDOWN		EA		1						175	
P	O	R	2915-513-5230	MC409W	<76050>	.PUMP,FUEL VANE TYPE..... INTRCH 2915-752-9585		EA		1						175	
P	O	R	2915-595-4875	4103-23	<87915>	.PUMP,FUEL VANE TYPE..... INTRCH 2915-752-9585 SEE FIG.175B FOR BREAKDOWN ATTACHING PARTS		EA		1						175	
P	O	R	2915-486-1645	9147	<11599>	.PUMP,FUEL VANE TYPE..... INTRCH 2915-725-9585 SEE FIG.175H FOR BREAKDOWN ATTACHING PARTS		EA		1						175	
			5310-167-0836	AN960-516L	<88044>	.WASHER,FLAT.....		HD		4	*	*	*		*	175	3
			5310-088-0553	MS21044N5	<96906>	.NUT,SELF-LOCKING,HEXAGON.... ---*---		HD		4	*	*	*		*	175	
			4730-231-4009	MS20822-4	<96906>	.ELBOW,PIPE TO TUBE.....		EA		4	*	*	*		*	175	
			5330-202-2272	AN4059-1	<88044>	.GASKET.....		AV		1	7	19	37		*	175	4
P	O		6680-557-0835	MS25038-2	<96906>	.GENERATOR-TACHOMETER..... ATTACHING PARTS		EA		1	REF	REF	REF	REF	REF	175	5
			5310-141-1795	AN960-416	<88044>	.WASHER,FLAT.....		HD		4	*	*	*		*	175	6
			5310-877-5796	MS21044N4	<96906>	.NUT,SELF-LOCKING,HEXAGON.... ---*---		EA		4	*	*	*		*	175	
			5330-738-0543	MS9134-01	<96906>	.GASKET.....		EA		1	*	*	*		*	175	7
P	O	R	2925-605-5935	AN4116R3FA	<88044>	.STARTER,ENGINE,ELECTRICAL... RPLS--		EA		1	*	*	*		*	175	8
		R	2925-141-9378	1416-122J	<06840>	.STARTER,ENGINE,ELECTRICAL... RPL-BY 2925-605-5935										175	

(1) SOURCE, MAINT AND REC CODE (a) SOURCE CODE	(b) MAINT LEVEL	(c) REC CODE	(2) FEDERAL STOCK NUMBER	REFERENCE NUMBER	(3) DESCRIPTION	MODELS USABLE ON CH-34C	(4) UNIT OF ISSUE	(5) QTY INC IN UNIT PACK	(6) QTY INC IN UNIT	(7) 30-DAY DS/GS MAINT ALW (a) 1-20	(b) 21-50	(c) 51-100	(8) 1-YR ALWPER 100 EQUIP CNTGCY	(9) DEPOT MAINT ALWPER 100 EQUIP	(10) ILLUSTRATION (a) FIG NO	(b) ITEM NO
					CONTINUED										175	
					SEE FIG.175A FOR BREAKDOWN											
		R	2925-141-9746	JH17121R3 <80247>	.STARTER,ENGINE,ELECTRICAL...										175	
					RPL-BY 2925-605-5935											
		R	2925-167-2640	1363MODEL16STYLEC <06840>	.STARTER,ENGINE,ELECTRICAL...										175	
					RPL-BY 2925-605-5935											
		R	2925-180-1266	1416-168 <19315>	.STARTER,ENGINE,ELECTRICAL...										175	
					RPL-BY 2925-605-5935											
		R	2925-180-3194	JH11900R3 <31435>	.STARTER,ENGINE,ELECTRICAL...										175	
					RPL-BY 2925-605-5935											
		R	2925-233-5644	1416-42F <06840>	.STARTER,ENGINE,ELECTRICAL...										175	
					RPL-BY 2925-605-5935											
					SEE FIG.175A FOR BREAKDOWN											
		R	2925-327-9521	36E00-2A <06840>	.STARTER,ENGINE,ELECTRICAL...										175	
					RPL-BY 2925-605-5935											
		R	2925-373-8672	1416-42J <19315>	.STARTER,ENGINE,ELECTRICAL...										175	
					RPL-BY 2925-605-5935											
		R	2925-373-8688	1416-42G <19315>	.STARTER,ENGINE,ELECTRICAL...										175	
					RPL-BY 2925-605-5935											
					SEE FIG.175A FOR BREAKDOWN											
					.STARTER,ENGINE,ELECTRICAL...											
					RPL-BY 2925-605-5935											
		R	2925-684-2356	AN4116R3B <88044>	.STARTER,ENGINE,ELECTRICAL...										175	
					RPL-BY 2925-605-5935											
		R	2925-708-5444	1416-62F <06840>	.STARTER,ENGINE,ELECTRICAL...										175	
					RPL-BY 2925-605-5935											
					INTRCH											
P	O	R	2925-708-5443	JH12680R3 <31435>	.STARTER,ENGINE,ELECTRICAL...		EA		1						175	
					INTRCH 2995-605-5935											
					ATTACHING PARTS											
			5310-167-0821	AN960-616 <88044>	.WASHER,FLAT.....		HD		6	*	*	*		*	175	9
			5310-950-0039	MS21044N6 <96906>	.NUT,SELF-LOCKING,HEXAGON....		HD		6	*	*	*		*	175	
					---*---											
			5330-584-9080	AN4047-1 <88044>	.GASKET.....		EA		1	REF	REF	REF		*	175	10
P	F		5925-674-4257	10-35330-3 <77820>	.CIRCUIT BREAKER.....		EA		1	*	*	*		*	175	11
P	F		6620-526-6141	10-35489 <77820>	..GASKET.....		EA		1	2	5	10		*	175	
P	F		6620-334-7198	10-76591 <77820>	..GASKET.....		EA		1	*	*	*		*	175	
			2915-605-4553	TF3506 <59875>	PARTS KIT,PUMP RPL-BY.....										175	
					2915-703-8483 U/O											
					2915-373-8893,											
					2915-504-9986											
P	H		2915-703-8483	TF3506-2 <59875>	PARTS KIT,PUMP RPLS--.....		EA		1	*	*	*		*	175	
					2915-605-4553 U/O											
					2915-373-8893,											
					2915-504-9986 SEE											
					FUNCTIONAL GROUP 50											
					FOR COMPONENTS											
P	H		2915-654-9611	32-0022 <77200>	REPAIR KIT,PUMP OVERHAUL.....		EA		1	*	*	*		*	175	
					U/O 2915-373-8746 SEE											
					FUNCTIONAL GROUP 50											
					FOR COMPONENTS											
			2915-740-1463	TF3505 <59875>	PARTS KIT,PUMP RPL-BY.....		EA			*	*	*			175	

(1) SOURCE, MAINT AND REC CODE (a) SOURCE CODE	(b) MAINT LEVEL	(c) REC CODE	(2) FEDERAL STOCK NUMBER	REFERENCE NUMBER	(3) DESCRIPTION	MODELS USABLE ON CH-34C	(4) UNIT OF ISSUE	(5) QTY INC IN UNIT PACK	(6) QTY INC IN UNIT	(7) 30-DAY DS GS MAINT ALW (a) 1-20	(b) 21-50	(c) 51-100	(8) 1-YR ALW PER 100 EQUIP CNTGCY	(9) DEPOT MAINT ALW PER 100 EQUIP	(10) ILLUSTRATION (a) FIG NO	(b) ITEM NO
					CONTINUED 2915-740-1463 U/O 2915-373-8893, 2915-504-9986										175	
P	H		2915-740-1463	TF3505-2 <59875>	PARTS KIT,PUMP RPLS--..... 2915-605-4552 U/O 2915-373-8893, 2915-504-9986 SEE FUNCTIONAL GROUP 50 FOR COMPONENTS		EA		1	*	*	*		*	175	
			2915-605-9863	TF181 <59875>	PARTS KIT,PUMP RPL-BY..... 2915-716-2267 U/O 2915-289-8412										175	
P	H		2915-716-2267	TF181-1 <59875>	PARTS KIT,PUMP RPLS--..... 2915-605-9863 U/O 2915-289-8412 SEE FUNCTIONAL GROUP 50 FOR COMPONENTS		EA		1	*	*	*		*	175	
			2925-632-0562	52-200000 <31435>	PARTS KIT,STARTER ASSEMBLY... RPL-BY 2925-737-6476 U/O 2925-141-9746, 2925-180-3194,& 2925-708-5443		EA			*	*	*			175	
P	H		2925-737-6476	52-200007 <31435>	PARTS KIT,STARTER ASSEMBLY... RPLS-- 2925-632-0562 U/O 2925-141-9746, 2925-180-3194,& 2925-708-5443 SEE FUNCTIONAL GROUP 50 FOR COMPONENTS		EA		1	*	*	*		*	175	
P	H		2915-605-9862	TF174 <59875>	PARTS KIT,PUMP,OVERHAUL..... U/O 2915-289-8412 SEE FUNCTIONAL GROUP 50 FOR COMPONENTS		EA		1	*	*	*		*	175	
P	H		2915-658-9923	32-0023 <77200>	PARTS KIT,FUEL PUMP U/O..... 2915-373-8746 SEE FUNCTIONAL GROUP 50 FOR COMPONENTS		EA		1	*	*	*		*	175	
P	O	R	2925-141-9378	1416-122J <19315>	STARTER,ENGINE,ELECTRICAL.... SEE FIG.175 FOR NHA		EA		1						175A	
P	O	R	2925-654-3206	1416-82G <19315>	STARTER,ENGINE,ELECTRICAL.... SEE FIG.175 FOR NHA		EA		1						175A	
		R	2925-233-5644	1416-42F <19315>	STARTER,ENGINE,ELECTRICAL.... SEE FIG.175 FOR NHA		EA		1						175A	
P	O	R	2925-373-8672	1416-42J <19315>	STARTER,ENGINE,ELECTRICAL.... SEE FIG.175 FOR NHA		EA		1						175A	

(1) SOURCE, MAINT AND REC CODE (a) SO REC CODE	(b) MAINT LEVEL	(c) REC CODE	(2) FEDERAL STOCK NUMBER	REFERENCE NUMBER		(3) DESCRIPTION	MODELS USABLE ON CH-34C	(4) UNIT OF ISSUE	(5) QTY INC IN UNIT PACK	(6) QTY INC IN UNIT	(7) 30-DAY DS GS MAINT ALW (a) 1-20	(b) 21-50	(c) 51-100	(8) 1 YR ALW PER 100 EQUIP CNTGCY	(9) DEPOT MAINT ALW PER 100 EQUIP	(10) ILLUSTRATION (a) FIG NO	(b) ITEM NO
		R	2925-373-8688	1416-42G	<19315>	STARTER,ENGINE,ELECTRICAL.... SEE FIG.175 FOR NHA		EA		1						175A	
P	H		2925-441-6260	835644	<19315>	.JAW,STARTER..... ATTACHING PARTS		EA		1	*	*	*		*	175A	1
			5315-234-1856	MS24665-155	<96906>	.PIN,COTTER.....		HD		1	*	*	*		*	175A	2
P	H		5310-176-8110	70510	<93575>	.NUT,SLOTTED,HEXAGON...NOTE 1 NOTE 2		HD		1	*	*	*		*	175A	3
						---*---											
P	H		2920-268-4069	839234	<19315>	.PACKING,PREFORMED.....NOTE 1 NOTE 2		EA		1	*	*	*		*	175A	
X2	H			874911	<19315>	.HOUSING,ENGINE DRIVE,..... ELECTRIC STARTER NOTE 5 & 7		EA		1						175A	4
X2	H			842711	<19315>	.END BELL,ELECTRICAL..... NOTE 4,6 & 8 ATTACHING PARTS		EA		1						175A	
P	H		5305-776-7478	126856	<19315>	.SCREW,MACHINE.....NOTE 1 NOTE 2		EA		8	*	*	*		*	175A	5
						---*---											
P	H		2925-293-4237	824168	<19315>	..BEARING,SLEEVE.....NOTE 1 NOTE 2		EA		1	*	2	2		*	175A	6
X2	H		2925-211-4026	835124	<06840>	.SPIDER ASSEMBLY,STARTER..... FIRST STAGE SEE FIG.175A <SHEET 2 OF 7> FOR BREAKDOWN		EA		1	*	*	*		*	175A	7
X2	H		2925-733-8628	834761	<99551>	.SPIDER ASSEMBLY,STARTER..... SECOND STAGE SEE FIG.175A <SHEET 3 OF 7> FOR BREAKDOWN		EA		1	*	*	2		*	175A	8
P	H		2920-776-7470	837321	<19315>	.PLATE STARTER BAFFLE..NOTE 1 NOTE 4 NOTE 6 ATTACHING PARTS NOTE 8		EA		1	*	*	*		*	175A	9
			5305-958-5453	AN505-6R6	<88044>	.SCREW,MACHINE.....NOTE 1 NOTE 4 NOTE 6 NOTE 8		EA		4	4	9	18		*	175A	10
			5305-958-5453	AN505-6R6	<88044>	.SCREW,MACHINE.....NOTE 2 NOTE 5 NOTE 7		EA		3	REF	REF	REF		*	175A	
						---*---											
P	H		5310-776-7487	126839	<19315>	.WASHER,FLAT.....		EA		1	*	*	*		*	175A	11
X2	H			842657-2	<19315>	.BARREL ASSEMBLY SEE FIG.... 175A <SHEET 4 OF 7> FOR BREAKDOWN		EA		1						175A	12
P	H		5340-127-4979	126838	<19315>	.SPACER,RING.....		EA		1	*	*	*		*	175A	13
P	H		2925-548-8124	131221	<19315>	.COVER,ELECTRICAL CONTACT.... NOTE 1 NOTE 2 NOTE 3 ATTACHING PARTS		EA		2	*	*	*		*	175A	14
P	H		5305-441-4447	131219	<19315>	.SCREW,MACHINE.....NOTE 1		EA		2	*	*	*		*	175A	15

(1) SOURCE MAINT AND RFC CODE (a)	(b)	(c)	(2) FEDERAL STOCK NUMBER	REFERENCE NUMBER		(3) DESCRIPTION	MODELS USABLE ON CH-34C	(4) UNIT OF ISSUE	(5) QTY INC IN UNIT PACK	(6) QTY INC IN UNIT	(7) 30-DAY DS GS MAINT ALW (a) 1-20	(b) 21-50	(c) 51-100	(8) 1-YR ALWPER 100 EQUIP CNTGCY	(9) DEPOT MAINT ALWPER 100 EQUIP	(10) ILLUSTRATION (a) FIG NO	(b) ITEM NO
						CONTINUED										175A	15
						NOTE 2											
						NOTE 3											
						---*---											
P	H		2925-483-9878	131222	<19315>	.PIN,WINDOW STRAP.....NOTE 1		EA		1	*	*	*		*	175A	16
						NOTE 2											
						NOTE 3											
P	H		5315-200-6477	131223	<19315>	.PIN STRAIGHT,HEADLESS.NOTE 1		EA		1	*	*	*		*	175A	17
						NOTE 2											
						NOTE 3											
P	H		5977-263-0697	854305	<19315>	.BRUSH,ELECTRICAL CONTACT....		EA		4	*	*	*		*	175A	18
						NOTE 1											
						NOTE 2											
						NOTE 3											
						ATTACHING PARTS											
P	H		5305-483-9966	20506-7	<19315>	.SCREW,MACHINE.....NOTE 1		EA		4	*	*	*		*	175A	19
						NOTE 2											
						NOTE 3											
			5310-576-0546	MS35338-99	<96906>	.WASHER,LOCK.....NOTE 1		HD		4	*	*	*		*	175A	20
						NOTE 2											
						NOTE 3											
						---*---											
P	H		6125-166-2605	80330	<19315>	.CAP,ELECTRICAL.....NOTE 1		EA		1	*	*	*		*	175A	21
						NOTE 2											
						NOTE 4											
						NOTE 5											
						NOTE 6											
						NOTE 8											
P	H		2925-321-1082	837769	<19315>	.RETAINER,BALL BEARING.NOTE 2		EA		1	*	*	*		*	175A	22
						NOTE 7											
						ATTACHING PARTS											
P	H		5305-637-1471	11558	<19315>	.SCREW,MACHINE.....NOTE 1		EA		4	*	*	*		*	175A	23
						NOTE 2											
						NOTE 4											
						NOTE 5											
						NOTE 6											
						NOTE 8											
			5305-145-6971	AN503-8-6	<88044>	.SCREW,MACHINE.....NOTE 2		HD		2	*	*	*		*	175A	
						NOTE 7											
						---*---											
P	H		2925-574-8796	844460	<19315>	.PLATE,STARTER.....		EA		1	*	*	*		*	175A	24
X2	H		2925-980-0231	851016	<99551>	.ARMATURE AND PINION.....		EA		1	*	*	*		*	175A	25
						ASSEMBLY SEE FIG.175A											
						<SHEET 5 OF 7> FOR											
						BREAKDOWN NOTE 4											
						NOTE 5											
						NOTE 6											
						NOTE 8											
X2	H		2925-979-3621	864610	<19315>	.ARMATURE AND PINION.....		EA		1	*	*	*		*	175A	
						ASSEMBLY SEE FIG.175A											
						<SHEET 5 OF 7> FOR											
						BREAKDOWN NOTE 7											

(1) SOURCE, MAINT AND REC CODE (a) SOURCE CODE	(b) MAINT LEVEL	(c) REC CODE	(2) FEDERAL STOCK NUMBER	REFERENCE NUMBER	(3) DESCRIPTION	MODELS USABLE ON CH-34C	(4) UNIT OF ISSUE	(5) QTY INC IN UNIT PACK	(6) QTY INC IN UNIT	(7) 30-DAY DS GS MAINT ALW (a) 1-20	(b) 21-50	(c) 51-100	(8) 1 YR ALWPER 100 EQUIP CNTGCY	(9) DEPOT MAINT ALWPER 100 EQUIP	(10) ILLUSTRATION (a) FIG NO	(b) ITEM NO
					CONTINUED										175A	
					ATTACHING PARTS											
			5315-234-1856	MS24665-155 <96906>	.PIN,COTTER....NOTE 4,5,6 & 8		HD		1	*	*	*		*	175A	26
P	H		5315-017-9252	20503-24 <19315>	.PIN,COTTER.....NOTE 2		HD		1	*	*	*		*	175A	
					NOTE 7											
P	H		5310-441-6485	844187 <19315>	.NUT,SLOTTED,HEXAGON...NOTE 1		EA		1	*	*	*		*	175A	27
					NOTE 2											
					NOTE 4											
					NOTE 5											
					NOTE 6											
					NOTE 8											
X2	H			837770 <99551>	.JAW,ROTOR.....NOTE 7		EA		1						175A	
					---*---											
P	H		2925-301-0814	131286 <99551>	.COVER,ENGINE STARTER..NOTE 4		EA		1	2	2	4		*	175A	28
					NOTE 5											
					NOTE 6											
					ATTACHING PARTS											
			5305-264-2220	AN503-8-4 <88044>	.SCREW,MACHINE.....NOTE 1		GR		2	*	*	*		*	175A	29
					NOTE 2											
					NOTE 4											
					NOTE 5											
					NOTE 6											
					---*---											
			5305-276-1728	AN501AB10-5 <88044>	.SCREW,MACHINE.....NOTE 1		GR		1	*	*	*		*	175A	30
					NOTE 2											
					NOTE 3											
			5310-184-8968	MS35337-100 <96906>	.WASHER,LOCK.....NOTE 1		HD		1	*	*	*		*	175A	31
					NOTE 2											
					NOTE 3											
X2	H			831935 <19315>	.HEAD ASSEMBLY,BACK SEE.....		EA		1						175A	32
					FIG.175A <SHEET 6 OF 7>											
					FOR BREAKDOWN NOTE 4											
					NOTE 5											
					NOTE 6											
X2	H			884898 <19315>	.HEAD ASSEMBLY,BACK SEE.....		EA		1						175A	
					FIG.175A<SHEET 6 OF 7>FOR											
					BREAKDOWN NOTE 7											
X2	H			886199 <19315>	.HEAD ASSEMBLY,BACK SEE.....		EA		1						175A	
					FIG.175A <SHEET 6 OF 7>											
					FOR BREAKDOWN NOTE 8											
					ATTACHING PARTS											
				AN501AC10-40 <88044>	.SCREW,MACHINE.....NOTE 1		EA		5						175A	33
					NOTE 2											
P	H		5310-516-2701	18357 <19315>	.WASHER,FLAT.....NOTE 1		HD		6	*	*	*		*	175A	34
					NOTE 2											
					---*---											
P	H		3110-100-2359	2050445 <19315>	.BEARING,BALL.....NOTE 2		EA		1	*	*	*		*	175A	35
					NOTE 4											
					NOTE 5											
					NOTE 6											
					NOTE 8											
P	H		3110-108-9196	2050450 <19315>	.BEARING,BALL,ANNULAR..NOTE 2		EA		1	*	*	*		*	175A	

(1) SOURCE, MAINT AND REC CODE (a) SOURCE CODE	(b) MAINT LEVEL	(c) REC CODE	(2) FEDERAL STOCK NUMBER	REFERENCE NUMBER	(3) DESCRIPTION	MODELS USABLE ON CH-34C	(4) UNIT OF ISSUE	(5) QTY INC IN UNIT PACK	(6) QTY INC IN UNIT	(7) 30-DAY DS GS MAINT ALW (a) 1-20	(b) 21-50	(c) 51-100	(8) 1-YR ALW PER 100 EQUIP CNTGCY	(9) DEPOT MAINT ALW PER 100 EQUIP	(10) ILLUSTRATION (a) FIG NO	(b) ITEM NO
					CONTINUED										175A	
					NOTE 7											
X2	H			131274 <19315>	.STATOR,ENGINE STARTER SEE.. FIG.175A<SHEET 7 OF 7> FOR BREAKDOWN		EA		1						175A	36
P	H		6150-091-6617	837771 <19315>	.END BELL,ELECTRICAL..... ROTATING EQUIPMENT NOTE 2		EA		1	*	*	*		*	175A	37
					NOTE 7											
					ATTACHING PARTS											
			5310-807-1467	MS21042-3 <96906>	.NUT,EXTENDED WASHER,HEXAGON.		HD		1	*	*	*		*	175A	38
					NOTE 2											
					NOTE 7											
			5310-167-0834	AN960-10L <88044>	.WASHER,FLAT.....NOTE 2		HD		8	*	*	*		*	175A	39
					NOTE 7											
					---*---											
			5305-053-1111	MS24621-7 <96906>	.SCREW,TAPPING,THREAD FORMING		HD		4	*	*	*		*	175A	40
P	H		2925-333-0727	842735 <19315>	.RING,PLANETARY,STARTER.....		EA		1	*	*	*		*	175A	41
					ATTACHING PARTS											
P	H		5305-441-6437	842726 <19315>	.SCREW,MACHINE.....NOTE 1		EA		3	*	*	*		*	175A	42
					NOTE 2											
					---*---											
P	H		2920-484-0208	837922 <19315>	.SPACER,ENGINE STARTER.NOTE 1		EA		3	*	*	*		*	175A	43
					NOTE 2											
P	H		2925-091-6633	883190 <19315>	.PINION ASSEMBLY,PLANETARY...		EA		3	*	*	*		*	175A	44
P	H		3110-271-0112	879792 <19315>	..BEARING,BALL,ANNULAR.NOTE 1		EA		3	*	*	*		*	175A	45
					NOTE 2											
					ATTACHING PARTS											
P	H		5340-598-2340	879805 <19315>	..RING,RETAINING.....NOTE 1		EA		3	*	*	*		*	175A	46
					NOTE 2											
					---*---											
P	H		6115-200-1390	881419 <19315>	..GEAR,SPUR.....		EA		3	*	*	*		*	175A	47
P	H		2925-733-8627	834759 <99551>	.SPIDER,PLANETARY,STARTER....		EA		1	*	2	2		*	175A	48
P	H		2925-293-4538	126851 <19315>	..BEARING,SLEEVE.....NOTE 1		EA		1	*	*	*		*	175A	49
					NOTE 2											
P	H		2925-484-0145	824087 <19315>	.RING,BEARING INNER.....		EA		4	*	*	*		*	175A	50
					ATTACHING PARTS											
			5315-823-8754	MS16562-195 <96906>	.PIN,SPRING.....NOTE 1 & 2		HD		4	*	*	*		*	175A	51
					---*---											
P	H		2920-484-0189	834758 <19315>	.GEAR,SPUR.....		EA		4	*	*	*		*	175A	52
P	H		2925-441-6239	834223 <19315>	.SHIM.....NOTE 1		EA		8	*	2	2		*	175A	53
					NOTE 2											
P	H		5310-209-3652	834224 <19315>	.WASHER,FLAT.....NOTE 1		EA		8	*	*	*		*	175A	54
					NOTE 2											
P	H		2925-441-6027	823869 <19315>	.BEARING,ROLLER.....NOTE 1		EA		4	*	*	*		*	175A	55
					NOTE 2											
P	H		5310-441-4349	126848 <19315>	.WASHER,FLAT.....NOTE 1		EA		1	*	*	*		*	175A	56
					NOTE 2											
P	H		2925-293-4223	126845 <19315>	..BEARING,SLEEVE.....		EA		1	*	*	*		*	175A	58
P	H		2925-441-6284	837346 <19315>	.NUT,ADJUSTING,CLUTCH.....		EA		1	*	*	*		*	175A	59
			5315-234-1856	MS24665-155 <96906>	.PIN,COTTER.....NOTE 1		HD		1	*	*	*		*	175A	60
					NOTE 2											
P	H		5310-516-2701	18357 <19315>	.WASHER,FLAT.....NOTE 1		HD		1	*	*	*		*	175A	61

(1) SOURCE, MAINT AND REC CODE (a) SOURCE CODE	(b) MAINT LEVEL	(c) REC CODE	(2) FEDERAL STOCK NUMBER	REFERENCE NUMBER	(3) DESCRIPTION	MODELS USABLE ON CH-34C	(4) UNIT OF ISSUE	(5) QTY INC IN UNIT PACK	(6) QTY INC IN UNIT	(7) 30-DAY DS GS MAINT ALW (a) 1-20	(b) 21-50	(c) 51-100	(8) 1-YR ALW PER 100 EQUIP CNTGCY	(9) DEPOT MAINT ALW PER 100 EQUIP	(10) ILLUSTRATION (a) FIG NO	(b) ITEM NO
					CONTINUED										175A	61
					NOTE 2											
X2	H		2925-370-9326	835488 <99551>	.BARREL,DRIVING.....		EA		1	*	*	*		*	175A	62
X2	H			843449 <19315>	.SUPPORT ASSEMBLY.....		EA		1						175A	63
P	H		2920-484-0289	843445 <19315>	..RETAINER.....NOTE 1		EA		1	*	*	*		*	175A	64
					NOTE 2											
P	H		5330-752-1558	890121-3 <19315>	..PACKING,PREFORMED....NOTE 1		EA		1	*	*	*		*	175A	65
					NOTE 2											
P	H		2925-799-3236	843446 <19315>	..SUPPORT,PLANETARY.....		EA		1	*	*	*		*	175A	66
P	H		3120-776-7490	835865 <19315>	.BUSHING.....		EA		1	*	*	*		*	175A	67
P	H		2925-326-0531	835898 <19315>	.NUT,SPLINE.....		EA		1	*	*	*		*	175A	68
X2	H			842659-2 <99551>	.SHAFT ASSEMBLY,SCREW.....		EA		1						175A	69
			5340-754-1083	MS16625-1137 <96906>	..RING,RETAINING.....NOTE 1		EA		1	*	*	*		*	175A	70
					NOTE 2											
P	H		2925-091-6619	841383 <99551>	..CUP,SPRING,CLUTCH....NOTE 1		EA		1	*	*	*		*	175A	71
					NOTE 2											
P	H		2925-441-6361	841447 <19315>	..CUP,SPRING,JAW RETURN.....		EA		2	*	*	*		*	175A	72
					NOTE 1											
					NOTE 2											
P	H		5340-268-0945	841385 <19315>	..SPRING,HELICAL,COMPRESSION.		EA		1	*	*	*		*	175A	73
					NOTE 1											
					NOTE 2											
P	H		2925-733-8636	841448 <19315>	..ROD ASSEMBLY,JAW RETURN....		EA		1	*	*	*		*	175A	74
P	H		5340-236-2294	835642 <19315>	..SPRING.....NOTE 1		EA		1	*	*	*		*	175A	75
					NOTE 1											
					NOTE 2											
P	H		2920-776-7484	835643 <19315>	..RETAINER,BARREL JAW.....		EA		1	*	*	*		*	175A	76
P	H		2925-037-8322	835645 <19315>	..SHAFT,SCREW.....		EA		1	*	*	*		*	175A	77
P	H		2925-388-8932	844146 <19315>	.PACK ASSEMBLY,CLUTCH.....		EA		1	*	*	*		*	175A	78
X1				825865 <19315>	..DISK,CLUTCH.....		EA		10						175A	79
X1				844222 <19315>	..DISK,INNER.....		EA		11						175A	80
P	H		2925-370-9327	835862 <19315>	.RING.....		EA		1	*	*	*		*	175A	81
P	H		2925-233-0889	126833 <19315>	.SPRING,HELICAL,COMPRESSION..		EA		12	*	*	*		*	175A	82
					NOTE 1											
					NOTE 2											
P	H		2925-934-8381	83599 <19315>	.RING,CLUTCH SPRING.....		EA		1	*	*	*		*	175A	83
P	H		2925-182-9887	822170 <99551>	.RACE,WAY.....NOTE 1		EA		6	*	*	*		*	175A	84
					NOTE 2											
P	H		2920-776-7469	834140 <19315>	.PINION,STARTER BARREL.....		EA		6	*	*	*		*	175A	85
P	H		5310-209-3652	834224 <19315>	.WASHER,FLAT.....NOTE 1		EA		8	*	*	*		*	175A	86
					NOTE 2											
P	H		2925-441-6239	834223 <19315>	.SHIM.....NOTE 1		EA		12	*	REF	REF		*	175A	87
					NOTE 2											
P	H		2920-776-7507	130299 <19315>	.ROLLER.....NOTE 1		EA		90	*	*	*		*	175A	88
					NOTE 2											
P	H		5305-983-7430	MS16998-33 <96906>	.SCREW,CAP,SOCKET HEAD.NOTE 1		EA		1	*	*	*		*	175A	89
					NOTE 2											
P	H		3110-183-9969	842826 <19315>	.BEARING,BALL,ANNULAR..NOTE 1		EA		1	*	*	*		*	175A	90
					NOTE 2											
P	H		5310-270-7127	839241 <19315>	.WASHER,RECESSED.....NOTE 1		EA		1	*	*	*		*	175A	91
					NOTE 2											
P	H		5315-441-4688	20521-2 <19315>	.KEY,WOODRUFF.....NOTE 1		EA		1	*	*	*		*	175A	92

(1) SOURCE, MAINT AND REC CODE (a) SOURCE CODE	(b) MAINT LEVEL	(c) REC CODE	(2) FEDERAL STOCK NUMBER	REFERENCE NUMBER	(3) DESCRIPTION	MODELS USABLE ON CH-34C	(4) UNIT OF ISSUE	(5) QTY INC IN UNIT PACK	(6) QTY INC IN UNIT	(7) 30-DAY DS GS MAINT ALW (a) 1-20	(b) 21-50	(c) 51-100	(8) 1-YR ALW PER 100 EQUIP CNTGCY	(9) DEPOT MAINT ALW PER 100 EQUIP	(10) ILLUSTRATION (a) FIG NO	(b) ITEM NO
					CONTINUED										175A	92
					NOTE 2											
P	H		2925-441-6249	834756 <19315>	.PINION,STARTER MOTOR.....		EA		1	*	*	*		*	175A	93
P	H		6105-220-9045	850233 <19315>	.ARMATURE,MOTOR.....NOTE 4		EA		1	*	*	*		*	175A	94
					NOTE 5											
					NOTE 6											
					NOTE 8											
X1				864611 <19315>	.ARMATURE STARTER GENERATOR..		EA		1						175A	
					NOTE 7											
P	H		5977-142-6828	122726 <19315>	.HOLDER ASSEMBLY,ELECTRICAL..		EA		1	*	*	*		*	175A	95
					CONTACT BRUSH											
					ATTACHING PARTS											
			5305-145-7012	AN503-8-12 <88044>	.SCREW,MACHINE.....NOTE 1		HD		4	*	*	*		*	175A	96
					NOTE 2											
			5310-515-8058	AN960-8 <88044>	.WASHER,FLAT.....NOTE 1		HD		4	*	*	*		*	175A	97
					NOTE 2											
			5310-045-3299	MS35338-42 <96906>	.WASHER,LOCK.....NOTE 1		HD		4	*	*	*		*	175A	98
					NOTE 2											
					NOTE 5											
					NOTE 6											
					NOTE 7											
					NOTE 8											
					---*---											
P	H		5340-774-4517	123194 <19315>	..SPRING,STARTER BRUSH.NOTE 1		EA		4	*	*	*		*	175A	99
					NOTE 2											
P	H		5330-228-5466	89823 <19315>	.WASHER,NONMETALLIC....NOTE 1		EA		1	*	*	*		*	175A	100
					NOTE 2											
P	H		2925-334-9524	831933 <19315>	.HOUSING,TERMINAL.....NOTE 4		EA		1	*	*	2		*	175A	101
					NOTE 5											
					NOTE 6											
					ATTACHING PARTS											
			5310-222-0671	MS20341-616 <96906>	.NUT,PLAIN,HEXAGON.....NOTE 1		HD		2	*	*	*		*	175A	102
			5310-576-0548	MS35337-103 <96906>	.WASHER,LOCK.....NOTE 1		HD		2	*	*	*		*	175A	103
					NOTE 2											
P	H		5310-441-5473	6087 <19315>	.WASHER,FLAT.....NOTE 1		EA		1	*	*	*		*	175A	104
					NOTE 2											
P	H		5330-483-9866	129802 <19315>	.WASHER,NONMETALLIC....NOTE 1		EA		1	*	*	*		*	175A	105
					NOTE 2											
P	H		5310-286-9625	883986 <19315>	.WASHER,FLAT.....NOTE 1		EA		1	*	*	*		*	175A	106
					NOTE 2											
					NOTE 7											
					NOTE 8											
P	H		5940-272-1813	131265 <19315>	.TERMINAL,STUD.....		EA		1	*	*	*		*	175A	107
P	H		5970-774-4526	131266 <19315>	.INSULATOR,STARTER.....NOTE 1		EA		1	*	*	*		*	175A	108
					NOTE 2											
					---*---											
			5975-296-9941	AN3054-16 <88044>	.NUT,COUPLING,ELECTRICAL.....		PG		1	*	*	*		*	175A	109
					CONDUIT NOTE 1											
					NOTE 2											
					NOTE 4											
					NOTE 5											
					NOTE 6											

(1) SOURCE, MAINT AND REC CODE (a) SOURCE CODE	(b) MAINT CODE	(c) REC CODE	(2) FEDERAL STOCK NUMBER	REFERENCE NUMBER	(3) DESCRIPTION	MODELS USABLE ON CH-34C	(4) UNIT OF ISSUE	(5) QTY INC IN UNIT PACK	(6) QTY INC IN UNIT	(7) 30-DAY DS GS MAINT ALW (a) 1-20	(b) 21-50	(c) 51-100	(8) 1-YR ALW PER 100 EQUIP CNTGCY	(9) DEPOT MAINT ALW PER 100 EQUIP	(10) ILLUSTRATION (a) FIG NO	(b) ITEM NO
P	H		5310-143-5516	123685	<19315> .WASHER,FLAT.....NOTE 2 NOTE 4 NOTE 5 NOTE 6		EA		1	*	*	*		*	175A	110
P	H		5325-132-8960	123684	<19315> .GROMMET.....NOTE 1 NOTE 2 NOTE 4 NOTE 5 NOTE 6		EA		2	*	*	*		*	175A	111
X2	H			831934	<19315> .END BELL,ELECTRICAL..... ROTATING EQUIPMENT NOTE 4 NOTE 5 NOTE 6 NOTE 8		EA		1						175A	112
X2	H			837764	<19315> .END BELL,ELECTRICAL..... ROTATING EQUIPMENT NOTE 7		EA		1						175A	
P	H		5307-206-7933	840810-1	<19315> ..STUD,PLAIN.....NOTE 7		EA		4	*	*	*		*	175A	113
			5315-720-8832	NAS602-2-2	<80205> ..PIN,STRAIGHT,HEADLESS..... NOTE 1		EA		1	*	*	*		*	175A	114
P	H		2925-037-8133	130587	<19315> .SHOE ASSEMBLY,POLE..... ATTACHING PARTS		EA		4	*	*	*		*	175A	115
P	H		5305-637-9064	21014	<19315> .SCREW,MACHINE.....NOTE 1 NOTE 2		EA		4	*	*	*		*	175A	116
					---*---											
X2	H			131229	<99551> .WINDING,MOTOR FIELD.....		EA		1						175A	117
P	H		5940-512-2917	92239	<19315> ..TERMINAL,LUG-25 PER PKG.... NOTE 1 & 2		PG		1	*	*	*		*	175A	118
P	H		5940-502-3744	131224	<19315> ..TERMINAL,LUG.....NOTE 1 NOTE 2		PG		1	*	*	*		*	175A	119
X2	H			130597	<19315> .SHIELD,COIL.....		EA		1						175A	120
			2925-710-6157	644006	<99551> PARTS KIT,STARTER,FIELD..... U/O 2925-141-9378, 2925-233-5644, 2925-373-8672, 2925-373-8688 & 2925-654-3206 USE UNTIL EXHAUSTED,THEN REQUISITION INDIVIDUAL COMPONENTS		EA		1						175A	
			2925-710-6158	644007	<99551> PARTS KIT,STARTER OVERHAUL... U/O 2925-233-5644, 2925-373-8672 & 2925-373-8688 USE UNTIL EXHAUSTED,THEN REQUISITION INDIVIDUAL COMPONENTS		EA		1						175A	
			2925-710-6155	644015	<99551> PARTS KIT,STARTER OVERHAUL... U/O 2925-141-9378 & 2925-654-3206 USE UNTIL EXHAUSTED,THEN REQUISITION INDIVIDUAL COMPONENTS NOTE 1 COMPONENT OF KIT 2925-710-6158		EA		1						175A	

(1) SOURCE MAINT AND REC CODE (a)	(b)	(c)	(2) FEDERAL STOCK NUMBER	REFERENCE NUMBER		(3) DESCRIPTION	MODELS USABLE ON CH-34C	(4) UNIT OF ISSUE	(5) QTY INC IN UNIT PACK	(6) QTY INC IN UNIT	(7) 30-DAY DS/GS MAINT ALW (a) 1-20	(b) 21-50	(c) 51-100	(8) 1-YR ALW PER 100 EQUIP CNTGCY	(9) DEPOT MAINT ALW PER 100 EQUIP	(10) ILLUSTRATION (a) FIG NO	(b) ITEM NO
						CONTINUED										175A	
						NOTE 2											
						COMPONENT OF KIT											
						2925-710-6155											
						NOTE 3											
						COMPONENT OF KIT											
						2925-710-6157											
						NOTE 4											
						U/O 2925-233-5644											
						NOTE 5											
						U/O 2925-654-3206											
						NOTE 6											
						U/O 2925-373-8688											
						NOTE 7											
						U/O 2925-141-9378											
						NOTE 8											
						U/O 2925-373-8672											
P	O	R	2915-595-4875	4103-42	<87915>	PUMP,ROTARY,POWER DRIVEN.....		EA		1						175B	
						SEE FIG.175 FOR NHA											
				3931	<87915>	.NUT,PRESSURE ADJUSTING.....		EA		1						175B	1
						SCREW LOCK NOTE 2											
				3907-20	<87915>	.SCREW,ADJUSTING.....NOTE 2		EA		1						175B	2
				2076	<87915>	.GASKET.....NOTE 2		EA		1						175B	3
				3916	<87915>	.NUT,SPRING FOLLOWER...NOTE 2		EA		1						175B	4
P	H		5340-012-9230	1777	<87915>	.SPRING.....		EA		1	*	*	*		*	175B	5
P	H		2915-449-1806	1783	<87915>	.SPRING,RELIEF VALVE.....		EA		1	*	*	*			175B	
				5497	<87915>	.COVER,RELIEF VALVE.....		EA		1						175B	6
				8073	<87915>	.HOUSING ASSEMBLY.....		EA		1						175B	7
						ATTACHING PARTS											
				1493	<87915>	.SCREW.....NOTE 1		EA		4						175B	8
			5310-167-0818	AN960-10	<88044>	.WASHER,FLAT.....NOTE 1		HD		4	*	*	*		*	175B	9
						---*---											
P	H		2915-166-5389	2080	<87915>	.GASKET,RELIEF VALVE HOUSING.		EA		1	*	2	2		*	175B	10
						NOTE 1											
P	H		2915-486-1628	8088A	<87915>	.DIAPHRAGM ASSEMBLY,RELIEF...		EA		1	*	*	*		*	175B	11
						VALVE NOTE 1											
P	H		2915-449-1813	8089	<87915>	.VALVE ASSEMBLY.....		EA		1	*	*	*		*	175B	12
				2089	<87915>	.GASKET,BY-PASS VALVE COVER..		EA		1						175B	14
						NOTE 2											
				1779	<87915>	.SPRING.....NOTE 2		EA		1						175B	15
				2541	<87915>	.VALVE,BY-PASS.....NOTE 2		EA		1						175B	16
				913A1D	<87915>	.PLUG,VENT.....NOTE 2		EA		1						175B	17
				3915	<87915>	.RING.....NOTE 2		EA		1						175B	18
				3909	<87915>	.SEAL,FUEL PUMP.....NOTE 1		EA		1						175B	19
P	H		2915-166-6581	3904	<87915>	.PLATE,REAR.....		EA		1	*	2	2		*	175B	20
						ATTACHING PARTS											

(1) SOURCE, MAINT AND REC CODE (a) SOURCE CODE	(b) MAINT LEVEL	(c) REC CODE	(2) FEDERAL STOCK NUMBER	REFERENCE NUMBER		(3) DESCRIPTION	MODELS USABLE ON CH-34C	(4) UNIT OF ISSUE	(5) QTY INC IN UNIT PACK	(6) QTY INC IN UNIT	(7) 30-DAY DS/GS MAINT ALW (a) 1-20	(b) 21-50	(c) 51-100	(8) 1-YR ALWPER 100 EQUIP CNTGCY	(9) DEPOT MAINT ALWPER 100 EQUIP	(10) ILLUSTRATION (a) FIG NO	(b) ITEM NO
			5305-271-7778	AN503-8-10	<88044>	.SCREW,MACHINE.....NOTE 1		HD		4	*	*	*		*	175B	21
						---*---											
P	H		2915-703-7091	3977	<87915>	.DISK,REAR PLATE.....NOTE 2		EA		1	*	*	*		*	175B	22
				1343	<87915>	.WASHER,UNIVERSAL.....NOTE 2		EA		1						175B	23
X2	H			8082	<87915>	.SEAL ASSEMBLY,PUMP....NOTE 1		EA		1						175B	24
				5036	<87915>	.SHAFT,SPLINE DRIVE....NOTE 2		EA		1						175B	25
				3125	<87915>	.SPRING.....NOTE 2		EA		1						175B	26
P	H		2915-703-7095	5495	<87915>	.COVER,NAMEPLATE.....		EA		1	*	*	*		*	175B	27
						ATTACHING PARTS											
			5305-145-7017	AN503-10-8	<88044>	.SCREW,MACHINE.....NOTE 1		HD		4	*	*	*		*	175B	28
			5310-167-0818	AN960-10	<88044>	.WASHER,FLAT.....NOTE 1		HD		4	*	*	*		*	175B	29
						---*---											
				2077	<87915>	.GASKET.....NOTE 1		EA		1						175B	30
P	H		3110-953-0243	3900	<87915>	.BEARING,BRONZE.....		EA		1	*	*	*		*	175B	31
				3971	<87915>	.BEARING.....NOTE 2		EA		1						175B	
				3040	<87915>	.PIN,VANE SPACER.....NOTE 2		EA		1						175B	32
				5260	<87915>	.ROTOR,FUEL PUMP.....NOTE 2		EA		1						175B	33
				5360	<87915>	.VANE,ROTOR.....		EA		4						175B	34
				5365	<87915>	.VANE,CARBON ROTOR.....NOTE 2		EA		4						175B	
			5305-282-3386	AN565C10-6	<88044>	.SETSCREW.....NOTE 2		EA		1	*	*	*		*	175B	35
P	H		2915-166-5392	3924	<87915>	.LINER,ROTOR.....		EA		1	*	*	*		*	175B	36
P	H		3110-953-0243	3900	<87915>	.BEARING,BRONZE.....		EA		1	*	*	*		*	175B	37
				3971	<87915>	.BEARING.....NOTE 2		EA		1						175B	
			4730-188-3509	MS20913-1	<96906>	.PLUG,PIPE.....		EA		3	REF	REF	REF		*	175B	38
				5690-3	<87915>	.HOUSING,MAIN.....		EA		1						175B	39
P	H		2915-775-0610	6000	<87915>	PARTS KIT,PUMP,CURE DATE.....		EA		1	*	*	2		*	175B	
						U/O 2915-595-4875 SEE											
						FUNCTIONAL GROUP 50 FOR											
						COMPONENTS											
P	H		2915-775-0611	2000	<87915>	PARTS KIT,OVERHAUL U/O.....		EA		1	*	*	*		*	175B	
						2915-595-4875 SEE											
						FUNCTIONAL GROUP 50 FOR											
						COMPONENTS											
						NOTE 1											
						COMPONENT OF KIT											
						2915-775-0610											
						NOTE 2											
						COMPONENT OF KIT											
						2915-775-0611											
P	O	R	2915-202-5816	RG5200F	<51663>	PUMP,ROTARY,POWER DRIVEN.....		EA		1						175C	
						SEE FIG.175 FOR NHA											
P	H		2915-335-5271	RB5232	<51663>	.COVER,VALVE,WATER INJECTION.		EA		1	*	*	*		*	175C	1
						ATTACHING PARTS											
			5305-781-7240	MS35265-70	<96906>	.SCREW,MACHINE.....		EA		4	*	*	*		*	175C	2
			5310-167-0834	AN960-10L	<88044>	.WASHER,FLAT.....		HD		4	*	*	*		*	175C	3
						---*---											

(1) SOURCE, MAINT AND REC CODE (a) SOURCE CODE	(b) MAINT CODE	(c) REC CODE	(2) FEDERAL STOCK NUMBER	REFERENCE NUMBER	(3) DESCRIPTION	MODELS USABLE ON CH-34C	(4) UNIT OF ISSUE	(5) QTY INC IN UNIT PACK	(6) QTY INC IN UNIT	(7) 30 DAY DS GS MAINT ALW (a) 1-20	(b) 21-50	(c) 51-100	(8) 1-YR ALW PER 100 EQUIP CNTGCY	(9) DEPOT MAINT ALW PER 100 EQUIP	(10) ILLUSTRATION (a) FIG NO	(b) ITEM NO
P	H		2915-037-8911	RA5237	<51663> .PLUG,PIPE.....		EA		1	*	*	*		*	175C	4
P	H		5310-095-4234	RA5234	<51663> .LOCKNUT.....		EA		1	*	*	*		*	175C	5
P	H		5340-376-6878	RA6424	<51663> ..RING,LOCK.....		EA		1	*	*	*		*	175C	7
P	H		2915-625-7443	RA5082	<51663> ..NUT.....		EA		1	2	2	3		*	175C	8
P	H		5305-697-5616	RA5233	<51663> ..SCREW,RELIEF.....		EA		1	*	*	*		*	175C	9
P	H		5330-641-2293	RB8358-515-5-16	<51663> .PACKING WITH RETAINER.....		EA		1	*	*	*		*	175C	10
P	H		2915-625-7448	RA5215	<51663> .SPRING,HELICAL,COMPRESSION..		EA		1	*	*	*		*	175C	11
P	H		4320-031-7399	RA5296	<51663> .SEAT,SPRING CENTERING.....		EA		1	*	2	2		*	175C	12
P	H		2915-545-0456	RA5297	<51663> .PLATE,UPPER,FUEL PUMP.....		EA		1	*	*	*		*	175C	13
P	H		5330-522-7616	RA5235	<51663> .GASKET.....		EA		2	*	*	*		*	175C	14
P	H		2915-625-7444	RA5084	<51663> .PLATE,LOWER,FUEL PUMP.....		EA		1	*	*	*		*	175C	15
P	H		2915-625-7453	RA5236	<51663> .VALVE,RELIEF,PUMP.....		EA		1	*	*	*		*	175C	16
P	H		2915-625-7445	RA5087	<51663> .VALVE,BY-PASS,FUEL PUMP.....		EA		1	*	*	2		*	175C	17
P	H		2915-625-7449	RA5216	<51663> .SPRING.....		EA		1	2	2	3		*	175C	18
X2	H		2915-625-7454	RB5231	<51663> .BODY,VALVE,PUMP.....		EA		1	*	*	*		*	175C	19
P	H		2915-205-1733	RA5227	<51663> .PLATE,INSTRUCTION.....		EA		1	*	*	*		*	175C	20
					ATTACHING PARTS											
			5305-253-5603	MS21318-1	<96906> .SCREW,DRIVE.....		HD		4	*	*	*		*	175C	21
					---*---											
P	H		2915-625-7450	RA5218	<51663> .GASKET.....		EA		1	*	*	*		*	175C	22
			5305-719-5342	MS51963-34	<96906> .SETSCREW.....		EA		1	*	*	*		*	175C	23
P	H		2915-376-6879	RA8930	<51663> .LOCKNUT.....		EA		1	*	*	*		*	175C	24
			5330-265-1075	MS29513-218	<96906> .PACKING,PREFORMED.....		EA		1	*	*	*		*	175C	25
			5330-248-3846	MS29513-114	<96906> .PACKING,PREFORMED.....		EA		1	*	*	*		*	175C	26
P	H		2915-540-7291	RA7654	<51663> .WASHER,THRUST.....		EA		1	*	*	*		*	175C	27
P	H		2915-609-3663	RA7653	<51663> .PLATE,SEAL.....		EA		1	*	*	*		*	175C	28
			5330-350-9013	AN6227B10	<88044> .PACKING,PREFORMED.....		EA		1	*	*	*		*	175C	29
X2	H			RA10476	<51663> .SPACER.....		EA		1						175C	30
P	H		2915-373-8778	RB8935	<51663> .COUPLING,DRIVE.....		EA		1	*	*	*		*	175C	31
P	H		2915-373-8767	RA5381	<51663> .SPRING,SEAL,FUEL PUMP.....		EA		1	*	*	*		*	175C	32
P	H		2915-373-8766	RA5299	<51663> .SEAT,SPRING.....		EA		1	*	*	*		*	175C	33
X2	H		2915-302-4365	RA5208-1	<51663> .PLATE,END,PUMP ASSEMBLY.....		EA		1	*	*	*		*	175C	34
					ATTACHING PARTS											
			5305-145-7017	AN503-10-8	<88044> .SCREW,MACHINE.....		HD		4	*	*	*		*	175C	35
P	H		5310-530-4114	P24532	<06848> .WASHER,FLAT.....		EA		4	*	*	*		*	175C	36
					---*---											
			5305-253-5603	MS21318-1	<96906> .SCREW,DRIVE.....		HD		4	*	*	*		*	175C	38
					---*---											
			5330-265-1090	MS29513-217	<96906> .PACKING,PREFORMED.....		EA		1	*	*	*		*	175C	39
P	H		2915-625-7451	RA5228-1	<51663> .BEARING,SPECIAL PUMP.....		EA		1	*	*	*		*	175C	40
P	H		2915-397-5742	RB5240	<51663> .ROTOR,FUEL PUMP.....		EA		1	*	*	2		*	175C	41
P	H		2915-625-7447	RA5212-1	<51663> .BLADE,FUEL PUMP.....		EA		4	*	*	2		*	175C	42
P	H		5315-584-9746	RA10539	<51663> .PIN,STRAIGHT,HEADLESS.....		EA		1	*	*	*		*	175C	44
P	H		2915-625-7451	RA5228-1	<51663> .BEARING,SPECIAL PUMP.....		EA		1	*	*	*		*	175C	45
X2	H			RD5201-1	<51663> .BODY,FUEL PUMP.....		EA		1						175C	46
			4730-188-3509	MS20913-1	<96906> .PLUG.....		EA		4	REF	REF	REF		*	175C	47
P	H		5340-870-6903	RB15259-5	<81904> .PLUG,SHIPPING AND STORAGE...		EA		2	*	*	*		*	175C	48

(1) SOURCE, MAINT AND REC CODE (a) SOURCE CODE	(b) MAINT LEVEL	(c) REC CODE	(2) FEDERAL STOCK NUMBER	REFERENCE NUMBER		(3) DESCRIPTION	MODELS USABLE ON CH-34C	(4) UNIT OF ISSUE	(5) QTY INC IN UNIT PACK	(6) QTY INC IN UNIT	(7) 30-DAY DS/GS MAINT ALW (a) 1-20	(b) 21-50	(c) 51-100	(8) 1-YR ALW PER 100 EQUIP CNTGCY	(9) DEPOT MAINT ALW PER 100 EQUIP	(10) ILLUSTRATION (a) FIG NO	(b) ITEM NO
P	O	R	2925-708-5443	JH12680R3	<31435>	STARTER,ENGINE,ELECTRICAL.... SEE FIG.175 FOR NHA		EA		1						175D	
P	O	R	2925-141-9746	JH17121R3	<31435>	STARTER,ENGINE,ELECTRICAL.... SEE FIG.175 FOR NHA		EA		1						175D	
P	H		2925-085-7316	JH11977-16	<31435>	.PLATE,IDENTIFICATION.....		EA		1	*	*	*		*	175D	1
P	H		2925-085-7323	JH11977-42	<31435>	.PLATE,IDENTIFICATION.....		EA		1	*	*	*		*	175D	
						ATTACHING PARTS											
			5305-253-5606	MS21318-7	<96906>	.SCREW,DRIVE.....		HD		4	*	*	*		*	175D	2
						---*---											
X2	H			JH11985	<31435>	.RETAINER ASSEMBLY.....		EA		1						175D	
						ATTACHING PARTS											
			5310-176-8196	AN355-4	<88044>	.NUT,SLOTTED,HEXAGON.....		HD		1	*	*	*		*	175D	3
			5315-234-1856	MS24665-155	<96906>	.PIN,COTTER.....		HD		1	*	*	*		*	175D	4
						---*---											
P	H		5340-282-1832	JH10569-5	<31435>	..RING,RETAINING.....		EA		1	*	*	*		*	175D	5
				JH11913	<31435>	..WASHER.....NOTE 1		EA		1						175D	6
				JH11952	<31435>	..SPRING,HELICAL,COMPRESSION. NOTE 1		EA		1						175D	7
				JH11974	<31435>	..SPACER,JAW STOP.....NOTE 1		EA		1						175D	8
X2	H			JH11908-5	<31435>	.JAW AND CONE ASSEMBLY.....		EA		1						175D	
P	H		5340-282-2361	JH10569-2	<31435>	..RING,RETAINING.....		EA		1	*	*	*		*	175D	9
P	H		2925-143-5809	JH11945	<31435>	..RETAINER,JAW SPRING.....		EA		1	*	*	*		*	175D	10
P	H		5330-441-8225	JH11921	<31435>	..WASHER,NONMETALLIC...NOTE 1		EA		2	*	*	*		*	175D	11
P	H		2925-143-5806	JH11951	<31435>	..SPRING,JAW.....NOTE 1		EA		1	*	*	*		*	175D	12
P	H		2925-143-5857	JH11947-1	<31435>	..CONE,NUT.....		EA		1	*	*	*		*	175D	13
P	H		2925-182-9163	JH11953R3	<31435>	..JAW,STARTER.....		EA		1	*	*	*		*	175D	14
P	H		2925-066-0307	JH11922	<31435>	.BASE ASSEMBLY SEE FIG..... 175D <SHEET 4 OF 4> FOR BREAKDOWN NOTE 2		EA		1	*	*	*		*	175D	15
X2	H			JH17123	<31435>	.BASE ASSEMBLY SEE FIG..... 175D <SHEET 4 OF 4> FOR BREAKDOWN NOTE 3		EA		1						175D	16
P	H		2925-533-5978	JH17105	<31435>	.RING,STARTER.....NOTE 3		EA		1	*	*	*		*	175D	17
						ATTACHING PARTS											
			5310-877-5796	MS21044N4	<96906>	.NUT,SELF-LOCKING,HEXAGON....		EA		6	*	*	*		*	175D	18
				JH13511-4	<31435>	.BOLT,BLANK.....NOTE 1		EA		6						175D	19
						---*---											
P	H		2925-143-5859	JH11944-3	<31435>	.SHIM,CLUTCH.....NOTE 1		EA		AR	*	*	*		*	175D	20
				JH11944-5	<31435>	.SHIM.....NOTE 1		EA		AR						175D	
P	H		2925-875-6453	JH11948	<31435>	.GEAR ASSEMBLY.....		EA		1	*	*	*		*	175D	21
P	H		5306-441-8254	JH11957	<31435>	..BOLT,JAW MESHING.....		EA		1	*	*	*		*	175D	22
X2	H			JH11901	<31435>	..GEARING ASSEMBLY SEE FIG.. 175D <SHEET 3 OF 4> FOR BREAKDOWN NOTE 2		EA		1						175D	24
P	H		5305-012-4723	AC50-16	<31435>	.SCREW.....NOTE 3		EA		1	*	*	*		*	175D	25
			5310-207-9078	AN365-836	<88044>	.NUT,SELF-LOCKING,HEXAGON.... NOTE 3		EA		1	*	*	*		*	175D	27
X2	H			JH12675L	<31435>	.MOTOR ASSEMBLY.....		EA								175D	
P	H		2925-635-6907	JH12661	<31435>	..COVER,ELECTRIC MOTOR.....		EA		1	*	*	*		*	175D	28
						ATTACHING PARTS											
			5305-150-9208	AN502-10-16	<88044>	..SCREW,MACHINE.....		HD		4	*	*	*		*	175D	29
			5310-167-0813	AN960-10	<88044>	..WASHER,FLAT.....NOTE 1		HD		4	*	*	*		*	175D	30

(1) SOURCE, MAINT AND REC CODE (a) SOURCE CODE	(b) MAINT LEVEL	(c) REC CODE	(2) FEDERAL STOCK NUMBER	REFERENCE NUMBER	(3) DESCRIPTION	MODELS USABLE ON CH-34C	(4) UNIT OF ISSUE	(5) QTY INC IN UNIT PACK	(6) QTY INC IN UNIT	(7) 30-DAY DS GS MAINT ALW (a) 1-20	(b) 21-50	(c) 51-100	(8) 1-YR ALWPER 100 EQUIP CNTGCY	(9) DEPOT MAINT ALWPER 100 EQUIP	(10) ILLUSTRATION (a) FIG NO	(b) ITEM NO
					CONTINUED										175D	30
					---*---											
P	O		2925-441-8316	JH12643 <31435>	..COVER,ELECTRICAL.....NOTE 1		EA		1	*	2	2		*	175D	31
P	H		2925-441-6323	JH12657 <31435>	..SUPPORT.....NOTE 1		EA		1	*	*	*		*	175D	32
					ATTACHING PARTS											
P	H		2925-085-7320	JH746-8 <31435>	..SCREW,SELF-TAPPING.....		EA		1	*	*	*		*	175D	33
					---*---											
P	H		5977-733-8603	JH12506 <31435>	..BRUSH ASSEMBLY.....NOTE 1		EA		4	*	*	*		*	175D	34
					ATTACHING PARTS											
			5305-958-4358	MS35207-243 <96906>	..SCREW,MACHINE.....				4	*	*	*		*	175D	35
					---*---											
P	H		2925-295-1995	JH12665-1 <31435>	..ARMATURE,MOTOR.....		EA		4	*	*	*		*	175D	36
			5310-515-8058	AN960-8 <88044>	..WASHER,FLAT.....NOTE 1		HD		4	*	*	*		*	175D	37
		U		JH203-6 <31435>	..BEARING,BALL,ANNULAR.NOTE 1		EA		2						175D	40
				JH12545 <31435>	..RETAINER ASSEMBLY....NOTE 1		EA		1						175D	41
X2	H			JH12668-1 <31435>	..STATOR,ENGINE STARTER.....		EA		1						175D	42
					ATTACHING PARTS											
			5310-167-0818	AN960-10 <88044>	..WASHER,FLAT.....NOTE 1		HD		4	*	*	*		*	175D	43
				JH12528 <31435>	..BUS BAR.....NOTE 1		EA		2						175D	44
			5310-877-5797	MS21044N3 <96906>	..NUT,SELF-LOCKING,HEXAGON...		EA		8	*	*	*		*	175D	45
P	H		5305-628-5586	AC72-14 <31435>	..SCREW.....		EA		1	*	*	*		*	175D	46
			5310-167-0818	AN960-10 <88044>	..WASHER,FLAT.....NOTE 1		HD		4	*	*	*		*	175D	47
					---*---											
P	H		2925-085-7335	JH12546 <31435>	...STUD,YOKE.....NOTE 1		EA		8	*	*	*		*	175D	48
P	H		2925-033-4621	JH12648 <31435>	..END BELL,ELECTRICAL.....		EA		1	*	*	*		*	175D	
					ROTATING EQUIPMENT											
P	H		5310-208-3155	JH11437-4 <31435>	...NUT,CASTELLATED HEXAGON...		EA		1	*	*	*		*	175D	49
			5310-637-9541	MS35338-46 <96906>	...WASHER,LOCK.....NOTE 1		HD		2	*	*	*		*	175D	50
P	H		5310-271-3204	JH638-19 <31435>	...WASHER,FLAT.....NOTE 1		EA		1	*	*	*		*	175D	52
P	H		5330-441-8292	JH12512 <31435>	...WASHER,NONMETALLIC..NOTE 1		EA		1	*	*	*		*	175D	53
P	H		2925-321-1162	JH12655 <31435>	...TERMINAL ASSEMBLY,STARTER.		EA		1	*	*	*		*	175D	54
P	H		5970-733-8599	JH12588 <31435>	...INSULATION,STARTER.....		EA		1	*	*	*		*	175D	55
					MOTOR NOTE 1											
				JH12654 <31435>	...WASHER,TERMINAL.....NOTE 1		EA		1						175D	56
				JH12653 <31435>	...INSULATION,TERMINAL.NOTE 1		EA		1						175D	57
P	H		5977-441-8293	JH12515 <31435>	...HOLDER,ELECTRICAL.....		EA		4	*	*	*		*	175D	
					CONTACT BRUSH											
					ATTACHING PARTS											
			5305-660-2625	MS35265-47 <96906>	...SCREW,MACHINE.....NOTE 1		EA		8	*	*	*		*	175D	58
			5310-811-3494	MS21044N08 <96906>	...NUT,SELF-LOCKING,HEXAGON..		EA		8	*	*	*		*	175D	59
					NOTE 1											
			5310-515-8058	AN960-8 <88044>	...WASHER,FLAT.....NOTE 1		HD		16	*	*	*		*	175D	60
P	H		5330-640-9466	JH12519 <31435>	...WASHER,NONMETALLIC..NOTE 1		EA		16	*	*	*		*	175D	61
P	H		2920-441-8297	JH12529 <31435>	...INSULATION SLEEVING.NOTE 1		EA		8	*	*	*		*	175D	62
					---*---											
			5315-234-1864	AN381-3-16 <88044>	...PIN,COTTER.....		HD		1	*	*	*		*	175D	63
P	H		5977-733-8595	JH12539 <31435>	...SPRING,BRUSH.....		EA		1	*	*	*		*	175D	64
P	H		2925-085-7322	JH12517 <31435>	...HOLDER ASSEMBLY,BRUSH.....		EA		1	*	*	*		*	175D	65
			5315-823-8682	MS16555-25 <96906>	..PIN,STRAIGHT,HEADLESS.....		EA		1	*	*	*		*	175D	66
					NOTE 1											
P	H		2925-253-0643	JH12649 <31435>	..END BELL,ELECTRICAL.....		EA		1	*	*	*		*	175D	67
X2	H			JH11901 <31435>	.GEARING ASSEMBLY.....		EA								175D	

(1) SOURCE, MAINT AND REC CODE (a) SOURCE CODE	(b) MAINT LEVEL	(c) REC CODE	(2) FEDERAL STOCK NUMBER	REFERENCE NUMBER		(3) DESCRIPTION	MODELS USABLE ON CH-34C	(4) UNIT OF ISSUE	(5) QTY INC IN UNIT PACK	(6) QTY INC IN UNIT	(7) 30-DAY DS GS MAINT ALW (a) 1-20	(b) 21-50	(c) 51-100	(8) 1-YR ALW PER 100 EQUIP CNTGCY	(9) DEPOT MAINT ALW PER 100 EQUIP	(10) ILLUSTRATION (a) FIG NO	(b) ITEM NO
P	H		2925-284-1085	JH11903	<31435>	..END BELL,ELECTRICAL..... ROTATING EQUIPMENT		EA		1	*	2	2		*	175D	68
P	H		2925-284-1084	JH11902	<31435>	..END BELL,ELECTRICAL.....		EA		1	2	2	5		*	175D	69
				JH11975	<31435>	..BOLT,MACHINE.....NOTE 1		EA								175D	70
			5310-141-1795	AN960-416	<31435>	..WASHER,FLAT.....		HD		2	*	*	*		*	175D	71
				JH11907	<31435>	..DOWEL,TUBULAR.....NOTE 1		EA		3						175D	72
P	H		2925-441-8221	JH11912	<31435>	..COUNTERSHAFT,INTERNAL.....		EA		1	*	*	*		*	175D	75
P	H		3110-144-8870	JH200-1	<31435>	..BEARING,BALL,ANNULAR.NOTE 1 NOTE 1		EA		1	*	*	*		*	175D	76
				JH11969	<31435>	..WICK.....NOTE 1		EA		2						175D	78
				JH11973	<31435>	..SPRING,LUBRICATOR,BACKING.. ATTACHING PARTS		EA		1						175D	79
P	H		2925-085-7326	JH746-11	<31435>	..SCREW,SELF-TAPPING.....		EA		2	*	*	*		*	175D	80
P	H		2925-085-7318	JH205-24	<31435>	..WASHER,PLAIN.....NOTE 1 ---*---		EA		2	*	*	*		*	175D	81
				JH11968	<31435>	..WICK.....NOTE 1		EA		1						175D	82
				JH11984	<31435>	..SPRING,STARTER.....NOTE 1 ATTACHING PARTS		EA		1						175D	83
			5305-053-1117	MS21621-16	<96906>	..SCREW,TAPPING,THREAD..... FORMING NOTE 1 ---*---		GR		2	*	*	*		*	175D	84
P	H		2925-066-0307	JH11922	<31435>	.BASE ASSEMBLY.....NOTE 2		EA		1	*	*	*		*	175D	
X2	H			JH17123	<31435>	.BASE ASSEMBLY.....		EA		1						175D	
P	H		2925-733-8573	JH11964	<31435>	..RETAINER ASSEMBLY.....		EA		1	6	15	31		*	175D	85
X2	H			JH11928	<31435>	..GEARING ASSEMBLY,PLANETARY. NOTE 2		EA		1						175D	
P	H		2925-441-8255	JH11958	<31435>	...RING,LOCKING.....		EA		1	*	2	2		*	175D	86
				JH11983	<31435>	...SPRING,HELICAL,COMPRESSION NOTE 1		EA		3						175D	87
P	H		2925-143-5858	JH11931	<31435>	...RACE,PLANETARY.....		EA		3	*	*	*		*	175D	88
P	H		2925-143-5434	JH11929	<31435>	...GEAR,SPUR.....		EA		3	7	17	33		*	175D	89
				JH204-18	<31435>	...ROLLER,BEARING.....NOTE 1		EA		90						175D	90
				JH11930	<31435>	...SHIM.....NOTE 1		EA		6						175D	91
				JH11932	<31435>	...WASHER,THRUST.....NOTE 1		EA		1						175D	92
P	H		2925-293-6695	JH11959	<31435>	...WASHER,PLANETARY THRUST...		EA		1	*	*	*		*	175D	93
P	H		2925-312-8542	JH11933	<31435>	...ARM SUBASSEMBLY.....		EA		1	*	*	*		*	175D	95
P	H		2925-336-8296	JH12549	<31435>	..PLATE ASSEMBLY.....		EA		12	*	*	*		*	175D	
X1				JH11925	<31435>	...GEAR,SPUR.....		EA		6						175D	96
X1				JH11926	<31435>	...GEAR,INTERNAL.....		EA		1						175D	97
P	H		5310-143-5807	JH11927	<31435>	..WASHER,FLAT.....		EA		1	*	*	*		*	175D	98
X2	H			JH11941	<31435>	..BASE,SUBASSEMBLY.....NOTE 2		EA		1						175D	100
X2	H		2925-295-1994	JH17102	<31435>	..END BELL,ELECTRIC....NOTE 3		EA		1	*	*	*		*	175D	101
P	H		2925-737-6476	52-200007	<31435>	PARTS KIT,STARTER ASSEMBLY,.. OVERHAUL 2925-141-9746,2925-708-5443 SEE FUNCITIONAL GROUP 50 FOR COMPONENTS NOTE 1 COMPONENT OF KIT 2925-737-6476 NOTE 2 U/O 2925-708-5443		EA		1	*	*	*		*	175D	

(1) SOURCE MAINT AND RFC CODE (a)	(b)	(c)	(2) FEDERAL STOCK NUMBER	REFERENCE NUMBER		(3) DESCRIPTION	MODELS USABLE ON CH-34C	(4) UNIT OF ISSUE	(5) QTY INC IN UNIT PACK	(6) QTY INC IN UNIT	(7) 30-DAY DS GS MAINT ALW (a) 1-20	(b) 21-50	(c) 51-100	(8) 1-YR ALW PER 100 EQUIP CNTGCY	(9) DEPOT MAINT ALW PER 100 EQUIP	(10) ILLUSTRATION (a) FIG NO	(b) ITEM NO
						CONTINUED										175D	
						NOTE 3											
						U/O 2925-141-9746											
		R	2915-513-5230	MC409A	<76050>	PUMP,ROTARY,POWER DRIVEN.....		EA		1						175E	
						SEE FIG.175 FOR NHA											
P	O	R	2915-513-5230	MC409W	<76050>	PUMP,ROTARY,POWER DRIVEN.....		EA		1						175E	
						SEE FIG.175 FOR NHA											
P	H		2915-603-6451	MC227	<76050>	.PLUG,FUEL PUMP.....		EA		1	*	*	*		*	175E	1
P	H		5310-550-9237	MC371	<76050>	.NUT,PLAIN,HEXAGON.....		EA		1	*	*	*		*	175E	2
				MC360	<76050>	.COVER.....		EA		1						175E	3
						ATTACHING PARTS											
			5306-550-9142	AN3-31	<88044>	.BOLT,MACHINE.....		EA		4	*	*	*		*	175E	4
			5306-150-9878	AN3-31A	<88044>	.BOLT,MACHINE.....		EA		4	*	*	*		*	175E	
			5310-167-0818	AN960-10	<88044>	.WASHER,FLAT.....		HD		4	*	*	*		*	175E	5
			5310-877-5797	MS21044N3	<96906>	.NUT,SELF-LOCKING,HEXAGON....		EA		4	*	*	*		*	175E	6
			5310-167-1284	AN310-3	<88044>	.NUT,CASTELLATED,HEXAGON.....		HD		4	*	*	*		*	175E	
						---*---											
P	H		2915-531-3247	MC370	<76050>	.GASKET.....		EA		1	*	*	*		*	175E	7
P	H		5305-166-4882	MC320	<76050>	.SCREW,ADJUSTING.....		EA		1	*	*	*		*	175E	8
P	H		5310-299-1048	MC363	<76050>	.WASHER,ADJUSTING.....		EA		1	*	*	*		*	175E	9
P	H		5305-299-1061	MC334	<76050>	.SPRING,RELIEF.....		EA		1	*	*	*		*	175E	10
P	H		5310-299-1049	MC364	<76050>	.WASHER,SPHERICAL-UPPER.....		EA		1	*	*	*		*	175E	11
P	H		3110-100-6149	MC501	<76050>	.BALL,BEARING.....		HD		1	*	*	*		*	175E	12
P	H		5310-299-1051	MC365	<76050>	.WASHER,SPHERICAL-LOWER.....		EA		1	*	*	*		*	175E	13
P	H		2915-603-6452	MC368	<76050>	.DIAPHRAGM.....		EA		2	*	*	*		*	175E	14
P	H		4820-299-1045	MC366	<76050>	.VALVE,BY-PASS.....		EA		1	*	*	*		*	175E	15
P	H		5330-180-5441	MC369	<76050>	.WASHER,NONMETALLIC.....		EA		1	*	*	*		*	175E	16
P	H		2915-299-0949	MC367	<76050>	.DISK,BY-PASS.....		EA		1	*	*	*		*	175E	17
P	H		5340-299-1062	MC347	<76050>	.SPRING,BY-PASS.....		EA		1	*	*	*		*	175E	18
P	H		4820-299-1046	MC361	<76050>	.VALVE,RELIEF.....		EA		1	*	*	*		*	175E	19
X2	H			MC362	<76050>	.HOUSING,VALVE.....		EA		1						175E	20
P	H		2915-571-3511	MC355	<76050>	.GASKET,VALVE HOUSING.....		EA		1	*	*	*		*	175E	21
			5305-253-5606	MS21318-7	<96906>	.SCREW,DRIVE.....		HD		3	*	*	*		*	175E	23
			4730-188-3509	MS20913-1	<96906>	.PLUG,PIPE.....		EA		3	REF	REF	REF		*	175E	24
			5305-144-3996	AN505-10-10	<88044>	.SCREW,MACHINE.....		EA		2	*	*	*		*	175E	25
X2	H		2915-053-1748	MC393	<76050>	.SEAT,SEAL.....		EA		1	*	*	*		*	175E	26
P	H		1650-513-5225	MC192	<76050>	.GASKET,SEAL.....		EA		1	2	2	3		*	175E	27
P	H		2915-053-1750	MC391	<76050>	.GLAND,FUEL PUMP.....		EA		1	*	*	*		*	175E	28
				MC400	<76050>	.SPRING.....		EA		1						175E	29
X2	H			MC402	<76050>	.RETAINER,PACKING.....		EA		1						175E	31
X2	H			MC398	<76050>	.RETAINER.....		EA		1						175E	32
P			5330-872-1252	MC412	<76050>	.PACKING,PREFORMED.....		EA		1	*	*	*		*	175E	34
P	H		2915-738-6782	MC394	<76050>	.SEAL.....		EA		1	*	*	*		*	175E	36
P	H		5310-738-6885	MC395	<76050>	.WASHER.....		EA		1	*	*	*		*	175E	37
P	H		3040-739-4896	MC392	<76050>	.SHAFT,DRIVE.....		EA		1	*	*	*		*	175E	38
P	H		2915-265-9855	MC343	<76050>	.PACKING,PREFORMED.....		EA		1	*	*	*		*	175E	39

(1) SOURCE, MAINT AND REC CODE (a) SOURCE CODE	(b) MAINT LEVEL	(c) RECOVERY CODE	(2) FEDERAL STOCK NUMBER	REFERENCE NUMBER		(3) DESCRIPTION	MODELS USABLE ON CH-34C	(4) UNIT OF ISSUE	(5) QTY INC IN UNIT PACK	(6) QTY INC IN UNIT	(7) 30-DAY DS/GS MAINT ALW (a) 1-20	(b) 21-50	(c) 51-100	(8) 1-YR ALW PER 100 EQUIP CNTGCY	(9) DEPOT MAINT ALW PER 100 EQUIP	(10) ILLUSTRATION (a) FIG NO	(b) ITEM NO
P	H		5315-486-2605	MC353	<76050>	.PIN,SECOND.....		EA		1	*	*	*		*	175E	40
P	H		2915-167-1410	MC351	<76050>	.BEARING,SLEEVE.....		EA		1	*	*	*		*	175E	41
P	H		2915-571-3504	MC330	<76050>	.VANE,ROTOR,FUEL PUMP.....		EA		1	*	*	*		*	175E	42
X2	H			MC328	<76050>	.ROTOR,FUEL PUMP.....		EA		1						175E	43
X2	H			MC324	<76050>	.ROTOR,FUEL PUMP.....		EA		1						175E	44
P	H		5315-486-2601	MC282	<76050>	.PIN,FIRST.....		EA		2	*	*	*		*	175E	45
P	H		2915-167-1410	MC351	<76050>	.BEARING,SLEEVE.....		EA		1	*	*	*		*	175E	46
P	H		3110-686-1347	MC339	<76050>	.BEARING,THRUST.....		EA		4	*	*	*		*	175E	47
X2	H			MC329	<76050>	.HOUSING,PUMP.....		EA		1						175E	48
P	O	R	2915-203-6129	2PR600CWXA1	<77200>	PUMP,ROTARY,POWER DRIVEN..... SEE FIG.175 FOR NHA		EA		1						175F	
X2	H		2915-363-2953	M400-13	<77200>	.LOCK,PLATE,BEARING..... ATTACHING PARTS		EA		1	*	*	*		*	175F	1
P	H		5305-206-8189	M400-17	<77200>	.SCREW..... ---*---		EA		1	*	*	*		*	175F	2
P	H		2915-868-9781	R400-92H	<77200>	.SEAL ASSEMBLY.....		EA		1	*	*	*		*	175F	
P	H		2915-037-8780	R400-88C	<77200>	..RETAINER.....		EA		1	*	*	*		*	175F	3
P	H		5310-095-4188	R400-97D	<77200>	..WASHER.....		EA		1	*	*	*		*	175F	4
P	H		2915-180-4971	R600-175	<77200>	..SEAL.....		EA		1	*	*	*		*	175F	5
P	H		2915-037-8782	R400-913	<77200>	.SHAFT,DRIVE.....		EA		1	*	*	*		*	175F	6
P	H		5340-274-9857	R400-97A	<77200>	.SPACER,RING.....		EA		1	*	*	*		*	175F	7
P	H		2915-167-2429	R400-92D	<77200>	.SEAL ASSEMBLY,FUEL PUMP.....		EA		1	*	*	*		*	175F	
P	H		2915-201-0033	R600-172	<77200>	.SPRING,HELICAL,COMPRESSION..		EA		1	*	*	*		*	175F	8
P	H		5330-291-8910	R600-103	<77200>	.WASHER,NONMETALLIC.....		EA		1	*	*	*		*	175F	9
P	H		2915-373-8729	R600-87J	<77200>	.BEARING,FRONT.....		EA		1	*	*	*		*	175F	10
			5330-265-1088	MS29513-27	<96906>	.PACKING,PREFORMED.....		EA		1	*	*	*		*	175F	11
P	H		5315-233-2451	R600-110A	<77200>	.PIN,STRAIGHT,HEADLESS.....		EA		1	*	*	*		*	175F	12
P	H		2915-035-6974	M600-5	<77200>	.BLADE,FUEL PUMP.....		EA		4	*	*	2		*	175F	13
P	H		2915-167-2383	M600-3A	<77200>	.ROTOR,FUEL PUMP.....		EA		1	*	*	*		*	175F	14
			4730-188-3509	MS20913-1	<96906>	.PLUG,PIPE.....		EA		4	REF	REF	REF		*	175F	15
P	H		4730-278-3423	R400-71	<77200>	.PLUG,PIPE.....		EA		1	*	*	*		*	175F	16
P	H		5310-363-2951	R600-94	<77200>	.NUT,RELIEF VALVE LOCK.....		EA		1	*	*	*		*	175F	17
P	H		5310-363-2949	R600-88	<77200>	.NUT,RELIEF VALVE.....		EA		1	*	*	*		*	175F	18
P	H		5305-095-4196	R600-93	<77200>	.SCREW,ADJUSTING.....		EA		1	*	*	*		*	175F	19
P	H		2915-037-8791	R600-84C	<77200>	.COVER,RELIEF VALVE..... ATTACHING PARTS		EA		1	*	*	*		*	175F	20
			5305-271-7778	AN503-8-10	<88044>	.SCREW,MACHINE.....		HD		6	*	*	*		*	175F	21
P	H		5310-199-7719	R600-97	<77200>	.WASHER,FLAT..... ---*---		EA		6	*	*	*		*	175F	22
P	H		2915-201-0032	R600-104J	<77200>	.SPRING,HELICAL,COMPRESSION..		EA		1	*	*	*		*	175F	23
P	H		5340-180-3708	R600-167	<77200>	.RING,RETAINING.....		EA		1	*	*	*		*	175F	24
P	H		5310-095-4192	R600-90A	<77200>	.NUT,SLOTTED,HEXAGON.....		EA		1	*	*	*		*	175F	25
P	H		5310-095-4195	R600-92D	<77200>	.WASHER,DIAPHRAGM.....		EA		1	*	*	*		*	175F	26
P	H		2915-373-8730	R600-91D	<77200>	.DIAPHRAGM.....		EA		2	*	*	*		*	175F	27
P	H		2915-376-6873	R600-89H	<77200>	.VALVE,RELIEF.....		EA		1	*	*	*		*	175F	28
P	H		2915-037-8787	R600-121B	<77200>	.DISK,RELIEF VALVE.....		EA		1	*	*	*		*	175F	29

(1) SOURCE, MAINT AND RFC CODE (a) SOURCE CODE	(b) MAINT LEVEL	(c) RFC CODE	(2) FEDERAL STOCK NUMBER	REFERENCE NUMBER	(3) DESCRIPTION	MODELS USABLE ON CH-34C	(4) UNIT OF ISSUE	(5) QTY INC IN UNIT PACK	(6) QTY INC IN UNIT	(7) 30-DAY DS GS MAINT ALW (a) 1-20	(b) 21-50	(c) 51-100	(8) 1-YR ALW PER 100 EQUIP CNTGCY	(9) DEPOT MAINT ALW PER 100 EQUIP	(10) ILLUSTRATION (a) FIG NO	(b) ITEM NO
P	H		2915-306-0053	R600-122A	<77200> .SPRING,HELICAL,COMPRESSION..		EA		1	*	*	*		*	175F	30
P	H		2915-037-8790	R600-83B	<77200> .BODY,RELIEF VALVE.....		EA			*	*	*		*	175F	31
					ATTACHING PARTS											
P	H		5305-206-9944	R600-96	<77200> .SCREW,MACHINE.....		EA		4	*	*	*		*	175F	32
P	H		5310-209-0158	SCD9612-12	<80063> .WASHER,FLAT.....		EA		4	*	*	*		*	175F	33
					---*---											
P	H		2915-167-4767	R600-98A	<77200> .GASKET,RELIEF VALVE BODY....		EA		1	*	*	*		*	175F	34
P	H		5315-613-5341	R600-42	<77200> .PIN,STRAIGHT,HEADLESS.....		EA		1	*	*	*		*	175F	35
P	H		2915-035-6978	M600-4C	<77200> .SLEEVE,PUMP.....		EA		1	*	*	*		*	175F	36
P	H		2915-037-8777	M600-10D	<77200> .BEARING,SLEEVE.....		EA		1	*	*	*		*	175F	37
X2	H		2915-037-8789	R600-82A	<77200> .BODY,PUMP.....		EA		1	*	*	*		*	175F	38
P	H		5330-868-1092	AF934-103	<77200> .RING,SEAL.....		EA		1	*	*	*		*	175F	
P	D	R	2915-504-9986	TF3500-4	<59875> PUMP,FUEL,VANE TYPE SEE.....		EA		1						175G	
					FIG.175 FOR NHA											
				TX94000-1	<59875> .BLOCK,PROTECTION.....NOTE 2		EA		1						175G	1
					ATTACHING PARTS											
				TX93001-3	<59875> .SCREW,MACHINE.....NOTE 2		EA		2						175G	2
			5310-167-0818	AN960-10	<88044> .WASHER,FLAT.....		HD		2	*	*	*		*	175G	3
					---*---											
				TF160	<59875> .GASKET.....NOTE 1		EA		1						175G	4
P	H		2915-446-7590	TX94003-4	<59875> .PLUG.....NOTE 2		EA		2	*	*	*		*	175G	5
				TX94003	<59875> .PLUG.....		EA		1						175G	6
			4730-188-3509	MS20913-1	<96906> .PLUG,PIPE.....NOTE 2		EA		3	REF	REF	REF		*	175G	7
P	H		2915-180-6032	TF109-1	<59875> .PLATE,INSTRUCTION.....		EA		1	*	*	*		*	175G	8
					ATTACHING PARTS											
			5305-253-5603	MS21318-1	<96906> .SCREW,DRIVE.....		HD		1	*	*	*		*	175G	9
					---*---											
X1				TF3530-1	<59875> .VALVE ASSEMBLY,RELIEF.....		EA		1						175G	
					ATTACHING PARTS											
			5306-853-1210	MS20074-04-17	<96906> .BOLT,MACHINE.....NOTE 2		EA		4	*	*	*		*	175G	10
			5310-141-1795	AN960-416	<88044> .WASHER,FLAT.....		HD		4	*	*	*		*	175G	11
					---*---											
X2	H			TF3545-1	<59875> ..BODY ASSEMBLY,VALVE.....		EA		1						175G	
			5310-167-1300	AN316-6R	<88044> ...NUT,PLAIN,HEXAGON.....		HD		1	*	*	*		*	175G	12
P	H		5330-291-8898	TF3559	<59875> ...WASHER,NONMETALLIC.....		EA		1	*	*	*		*	175G	13
				TF3547-1	<59875> ...SCREW AND WASHER ASSEMBLY.		EA		1						175G	14
					NOTE 2											
				TF155-1	<59875> ...PLUG.....NOTE 2		EA		1						175G	15
X2	H		2915-347-5051	TF3546-1	<59875> ...BODY,UPPER,FUEL PUMP.....		EA		1	*	*	*		*	175G	16
				TF3557	<59875> ..SPRING,HELICAL,COMPRESSION.		EA		1						175G	17
					NOTE 2											
				TF3587	<59875> ..RETAINER.....NOTE 2		EA		1						175G	18
X1				TF3588-1	<59875> ..WASHER.....		EA		1						175G	19
				TF3543	<59875> ..DIAPHRAGM.....NOTE 1		EA		1						175G	20
P	H		2915-449-2095	TF3534	<59875> ..VALVE.....		EA		1	*	*	*		*	175G	
X1				TF3551	<59875> ...RING.....NOTE 2		EA		1						175G	21

(1) SOURCE, MAINT AND REC CODE (a) SOURCE CODE	(b) MAINT LEVEL	(c) REC CODE	(2) FEDERAL STOCK NUMBER	REFERENCE NUMBER	(3) DESCRIPTION	MODELS USABLE ON CH-34C	(4) UNIT OF ISSUE	(5) QTY INC IN UNIT PACK	(6) QTY INC IN UNIT	(7) 30-DAY DS/GS MAINT ALW (a) 1-20	(b) 21-50	(c) 51-100	(8) 1-YR ALW PER 100 EQUIP CNTGCY	(9) DEPOT MAINT ALW PER 100 EQUIP	(10) ILLUSTRATION (a) FIG NO	(b) ITEM NO
				TF3590 <59875>	...CUP.....NOTE 2		EA		1						175G	22
X1				TF3540 <59875>	...SPRING,HELICAL,COMPRESSION NOTE 2		EA		1						175G	23
				TF3541 <59875>	...DISK,RELIEF VALVE BY-PASS. NOTE 2		EA		1						175G	24
X1				TF3589 <59875>	...WASHER.....		EA		1						175G	25
X1				TF3556 <59875>	...VALVE.....		EA		1						175G	26
P	H		2915-386-8799	TF3531 <59875>	..BODY,FUEL BOOSTER PUMP.....		EA		1	*	*	*		*	175G	
X1				TF3510 <59875>	...PIN,ALIGNING.....NOTE 2		EA		2						175G	27
X1				TF3532 <59875>	...BODY,RELIEF VALVE LOWER...		EA		1						175G	28
P	H		2915-328-3006	TF3861 <59875>	.GASKET,VALVE FLANGE...NOTE 1		EA		1	*	*	*		*	175G	29
P	H		2915-703-8631	TF105-1 <59875>	..NUT ASSEMBLY,SEAL.....		EA		1	*	*	*		*	175G	
				TF107 <59875>	...WASHER,THRUST.....NOTE 2		EA		1						175G	31
X1				TF106-1 <59875>	...NUT.....		EA		1						175G	32
P	H		2915-031-7542	TF4620 <59875>	..SHAFT DRIVE.....		EA		1	*	*	*		*	175G	33
				TF4621 <59875>	..PACKING,PREFORMED....NOTE 1		EA		1						175G	34
P	H		2915-442-5848	TF3564 <59875>	..LINK,COUPLING.....		EA		1	*	*	*		*	175G	35
P	H		2915-703-8538	TF3518-2 <59875>	..HOUSING SEAL.....		EA		1	*	*	*		*	175G	36
			5330-265-1078	MS29513-127 <96906>	..PACKING,PREFORMED....NOTE 1		EA		1	*	*	*		*	175G	
				TF824 <59875>	..CUP,SEAL.....NOTE 2		EA		1						175G	39
				TF823 <59875>	..SEAL,DIAPHRAGM.....NOTE 1		EA		1						175G	40
				TF873-1 <59875>	..RING.....NOTE 2		EA		1						175G	41
				TF825 <59875>	..SPRING,HELICAL,COMPRESSION. NOTE 2		EA		1						175G	42
				TF121 <59875>	..RETAINER,PACKING.....NOTE 2		EA		1						175G	43
				TF126 <59875>	..RING,RETAINING.....NOTE 2		EA		1						175G	44
P	H		2915-449-2092	TF3517 <59875>	..BEARING.....		EA		1	*	*	*		*	175G	45
P	H		2915-167-1436	TF3502 <59875>	..ROTOR ASSEMBLY,FUEL PUMP...		EA		1	*	*	*		*	175G	46
P	H		2915-037-9899	TF3513 <59875>	..BLADE.....		EA		2	*	*	*		*	175G	47
P	H		2915-142-4680	TF3813 <59875>	..BLADE,CENTER,TONGUE.....		EA		2	*	*	*		*	175G	
P	H		2915-142-4674	TF3514 <59875>	..BLADE,SIDE TORQUE.....		EA		2	*	*	*		*	175G	48
P	H		2915-142-4677	TF3515 <59875>	..BLADE,INTERMEDIATE TONGUE..		EA		2	*	*	*		*	175G	49
P	H		2915-167-4779	TF112 <59875>	..LINER,FUEL PUMP.....		EA		1	*	*	*		*	175G	50
P	H		5315-282-1196	TF110 <59875>	..PIN,STRAIGHT,HEADLESS..... NOTE 2		EA		1	*	*	*		*	175G	51
P	H		2915-449-2092	TF3517 <59875>	..BEARING.....		EA		1	*	*	*		*	175G	52
X2	H		2915-308-1579	TF108 <59875>	..BODY,AIRCRAFT FUEL PUMP....		EA		1	*	*	*		*	175G	53
P	H		2915-703-8483	TF3506-2 <59875>	PARTS KIT,PUMP,CURE U/O..... 2915-504-9986 SEE FUNCTIONAL GROUP 50 FOR COMPONENTS		EA		1	*	*	*		*	175G	
P	H		2915-740-1463	TF3505-2 <59875>	PARTS KIT,PUMP,OVERHAUL..... U/O 2915-504-9986 SEE FUNCTIONAL GROUP 50 FOR COMPONENTS		EA		1	*	*	*		*	175G	
					NOTE 1 COMPONENT OF KIT 2915-703-8483 NOTE 2 COMPONENT OF KIT 2915-740-1463											

(1) SOURCE, MAINT AND REC CODE (a) SOURCE CODE	(b) MAINT LEVEL	(c) REC CODE	(2) FEDERAL STOCK NUMBER	REFERENCE NUMBER		(3) DESCRIPTION	MODELS USABLE ON CH-34C	(4) UNIT OF ISSUE	(5) QTY INC IN UNIT PACK	(6) QTY INC IN UNIT	(7) 30-DAY DS GS MAINT ALW (a) 1-20	(b) 21-50	(c) 51-100	(8) 1-YR ALW PER 100 EQUIP CNTGCY	(9) DEPOT MAINT ALW PER 100 EQUIP	(10) ILLUSTRATION (a) FIG NO	(b) ITEM NO
P	O	R	2915-486-1645	9147	<11599>	PUMP,FUEL,VANE TYPE..... SEE FIG.175 FOR NHA		EA		1						175H	
				10335	<11599>	.SEAL,LEAD.....NOTE 1		EA		1						175H	1
				2662	<11599>	.PLUG,VENT.....NOTE 2		EA		1						175H	2
				AN913-1	<88044>	.PLUG,PIPE.....NOTE 2		EA		4						175H	3
				508	<11599>	.NUT,LOCK.....NOTE 2		EA		1						175H	4
				505	<11599>	.SCREW.....NOTE 2		EA		1						175H	5
				3438	<11599>	.GASKET.....NOTE 1		EA		1						175H	6
P	H		2915-166-4804	8242	<11599>	.FOLLOWER,SPRING.....		EA		1	*	*	*		*	175H	7
				3252	<11599>	.SPRING,RELIEF VALVE...NOTE 1		EA		1						175H	8
X2	H		2915-119-7229	510	<11599>	.COVER,FUEL PUMP VALVE..... ATTACHING PARTS		EA		1	*	*	*		*	175H	9
			5305-150-9215	AN503-10-26	<88044>	.SCREW,MACHINE.....NOTE 1		HD		4	*	*	*		*	175H	10
			5310-167-0818	AN960-10	<88044>	.WASHER,FLAT..... ---*---		HD		4	*	*	*		*	175H	11
				14204	<11599>	.PLATE,INSTRUCTION.....NOTE 2 ATTACHING PARTS		EA		2						175H	12
			5305-253-5603	MS21318-1	<96906>	.SCREW,DRIVE.....NOTE 2 ---*---		HD		2	*	*	*		*	175H	13
				3923	<11599>	.DIAPHRAGM ASSEMBLY....NOTE 1		EA		1						175H	20
P	H		2915-474-3815	408AA	<11599>	.VALVE ASSEMBLY,PUMP RELIEF..		EA		1	*	*	*		*	175H	21
				2677	<11599>	.GASKET.....NOTE 1		EA		1						175H	22
P	H		2915-166-6488	3194	<11599>	.PLATE,REAR SEAL..... ATTACHING PARTS		EA		1	*	*	*		*	175H	23
			5305-939-9232	MS35275-246	<96906>	.SCREW,MACHINE..... ---*---		EA		4	*	*	*		*	175H	24
P	H		5310-474-3808	3193	<11599>	.WASHER,UNIVERSAL.....NOTE 1		EA		1	*	*	*		*	175H	25
				4624	<11599>	.DIAPHRAGM ASSEMBLY....NOTE 1		EA		1						175H	26
P	H		2915-119-7234	3242	<11599>	.SHAFT,DRIVE.....		EA		1	*	*	*		*	175H	28
				3867	<11599>	.SPRING,HELICAL,COMPRESSION.. NOTE 2		EA		1						175H	29
X2	H			5482	<11599>	.COVER,FRONT,FUEL PUMP..... ATTACHING PARTS		EA		1						175H	30
			5305-145-7018	AN503-10-10	<88044>	.SCREW,MACHINE.....NOTE 1		HD		4	*	*	*		*	175H	31
			5310-167-0818	AN960-10	<88044>	.WASHER,FLAT..... ---*---		HD		4	*	*	*		*	175H	32
			5305-282-3385	AN565C10-5	<88044>	.SETSCREW.....NOTE 2		HD		1	*	*	*		*	175H	34
				2618	<11599>	.BEARING.....NOTE 2		EA		1						175H	35
X2	H			503	<11599>	.PIN,SHOULDER,HEADLESS.....		EA		1						175H	36
				2620	<11599>	.VANE.....NOTE 2		EA		4						175H	37
X2	H			3244	<11599>	.ROTOR,FUEL PUMP.....		EA		1						175H	38
X2	H			3803	<11599>	.LINER,FUEL PUMP.....		EA		1						175H	39
				4198	<11599>	.BEARING.....NOTE 2		EA		1						175H	40
				3820	<11599>	.PLATE,VANE.....NOTE 2 ATTACHING PARTS		EA		1						175H	41
			5305-253-5603	MS21318-1	<96906>	.SCREW,DRIVE.....NOTE 2 ---*---		HD		2	*	*	*		*	175H	42
P	H		2915-775-6536	48022	<11599>	PARTS KIT PUMP,CURE DATE..... U/O 2915-486-1645 SEE FUNCTIONAL GROUP 50 FOR COMPONENTS		EA		1	*	*	*		*	175H	
P	H		2915-775-6537	48021	<11599>	PARTS KIT,PUMP,OVERHAUL.....		EA		1	*	*	*		*	175H	

(1) SOURCE, MAINT AND REC CODE (a) SOURCE CODE	(b) MAINT LEVEL	(c) REC CODE	(2) FEDERAL STOCK NUMBER	REFERENCE NUMBER	(3) DESCRIPTION	MODELS USABLE ON CH-34C	(4) UNIT OF ISSUE	(5) QTY INC IN UNIT PACK	(6) QTY INC IN UNIT	(7) 30-DAY DS GS MAINT ALW (a) 1-20	(b) 21-50	(c) 51-100	(8) 1-YR ALW PER 100 EQUIP CNTGCY	(9) DEPOT MAINT ALW PER 100 EQUIP	(10) ILLUSTRATION (a) FIG NO	(b) ITEM NO
					CONTINUED U/O 2915-486-1645 SEE FUNCTIONAL GROUP 50 FOR COMPONENTS NOTE 1 COMPONENT OF KIT 2915-775-6536 NOTE 2 COMPONENT OF KIT 2915-775-6537										175H	
AF	F			S1630-80100-3	<78286> ENGINE UNIT ASSEMBLY.....										176	
					ENGINE UNIT ASSEMBLY..... RPLS-- 1560-575-6386 & PN S1630-80100-2 SEE FIG. 167 FOR NHA		EA								176	
P	O		1560-098-1581	S1630-80339-1	<78286> .PANEL ASSEMBLY-ACCESSORY.... COMPARTMENT SHROUD-LH		EA		1	2	2	4		*	176	1
P	O	R	1560-098-1582	S1630-80339-2	<78286> .PANEL ASSEMBLY-ACCESSORY.... COMPARTMENT SHROUD-RH		EA		1	2	2	5		*	176	2
					ATTACHING PARTS											
			5305-180-0010	AN525-10R8	<88044> .SCREW,MACHINE-LH.....		HD		15	*	*	*		*	176	3
			5305-180-0010	AN525-10R8	<88044> .SCREW,MACHINE-RH.....		HD		13	*	*	*		*	176	4
					---*---											
MF	F			S1630-80339-17	<78286> ..SEAL-LH..... MAKEFR		EA		1						176	5
					AR 5330-948-6602 TAPE											
MF	F			S1630-80339-18	<78286> ..SEAL-RH..... MAKEFR		EA		1						176	
					AR 5330-948-6602 TAPE											
				S1630-80339-7	<78286> ..ANGLE-LH.....		EA		1						176	7
				S1630-80339-8	<78286> ..ANGLE-RH.....		EA		1						176	
				S1630-80339-9	<78286> ..ANGLE-LH.....		EA		1						176	8
X1				S1630-80839-10	<78286> ..ANGLE-RH.....		EA		1						176	
P	F		1560-830-4300	S1630-80358-6	<78286> ..RETAINER,ACCESSORY..... COMPARTMENT		EA		1	*	*	2		*	176	9
					ATTACHING PARTS											
			5305-984-6191	MS35206-243	<96906> ..SCREW,MACHINE.....		HD		8	REF	REF	REF		*	176	10
					---*---											
			5305-281-8526	AN525-832R6	<88044> ..SCREW,MACHINE.....		HD		2	*	*	*		*	176	11
P	O		1560-565-5620	S1630-80358-1	<78286> ..SLIDE ASSEMBLY,HALF.....		EA		1	*	2	2		*	176	12
P	F		1560-565-5621	S1630-80358-2	<78286> ..SLIDE ASSEMBLY,HALF.....		EA		1	*	*	*		*	176	13
P	F		1560-654-3181	S1630-80117	<78286> .JUMPER,BONDING-LH..... ATTACHING PARTS		EA		1	2	4	7		*	176	14
			5306-182-1851	AN5H5	<88044> .BOLT,MACHINE.....		HD		1	*	*	*		*	176	15
			5310-167-0820	AN960-516	<88044> .WASHER,FLAT.....		HD		1	*	*	*		*	176	
			5306-180-2778	AN4CH4A	<88044> .BOLT,MACHINE.....		EA		1	*	*	*		*	176	16

(1) SOURCE, MAINT AND REC CODE (a) SOURCE CODE	(b) MAINT LEVEL	(c) REC CODE	(2) FEDERAL STOCK NUMBER	REFERENCE NUMBER	(3) DESCRIPTION	MODELS USABLE ON CH-34C	(4) UNIT OF ISSUE	(5) QTY INC IN UNIT PACK	(6) QTY INC IN UNIT	(7) 30-DAY DS/GS MAINT ALW (a) 1-20	(b) 21-50	(c) 51-100	(8) 1-YR ALW PER 100 EQUIP CNTGCY	(9) DEPOT MAINT ALW PER 100 EQUIP	(10) ILLUSTRATION (a) FIG NO	(b) ITEM NO
			5310-167-0753	AN960PD10L <88044>	.WASHER,FLAT.....		HD		1	*	*	*		*	176	
			5310-877-5797	MS21044N3 <96906>	.NUT,SELF-LOCKING,HEXAGON....		EA		1	*	*	*		*	176	
					---*---											
P	F		1560-075-2539	S1530-80227-2 <78286>	.BRACKET.....		EA		1	2	2	3		*	176	62
			5340-989-4576	EAB700D24 <81996>	.CLAMP,LOOP.....		EA		1	*	*	*		*	176	63
					ATTACHING PARTS											
			5305-958-1011	MS35219-56 <96906>	.SCREW,MACHINE.....		HD		1	*	*	*		*	176	64
			5310-167-0753	AN960PD10L <88044>	.WASHER,FLAT.....		HD		1	*	*	*		*	176	
			5310-877-5797	MS21044N3 <96906>	.NUT,SELF-LOCKING,HEXAGON....		EA		1	*	*	*		*	176	
					---*---											
P	F		1560-075-2539	S1530-80227-2 <78286>	.BRACKET.....		EA		1	REF	REF	REF		REF	176	65
			4730-278-9100	AN737RM56 <88044>	.CLAMP,HOSE.....		EA		1	*	*	*		*	176	66
P	O		2925-633-7221	FT1224-2 <83144>	.TUBE,MAGNETO,COOLING.....		EA		1	3	7	14		*	176	67
			5340-993-5476	EAB700D23 <81996>	.CLAMP,LOOP.....		EA		1	*	*	*		*	176	68
			5340-989-4576	EAB700D24 <81996>	.CLAMP,LOOP.....		EA		1	*	*	*		*	176	69
					ATTACHING PARTS											
			5305-958-1011	MS35219-56 <96906>	.SCREW,MACHINE.....		HD		1	*	*	*		*	176	70
			5310-167-0753	AN960PD10L <88044>	.WASHER,FLAT.....		HD		1	*	*	*		*	176	
			5310-877-5797	MS21044N3 <96906>	.NUT,SELF-LOCKING,HEXAGON....		EA		1	*	*	*		*	176	
					---*---											
			4730-278-9100	AN737RM56 <88044>	.CLAMP,LOOP.....		EA		1	*	*	*		*	176	71
P	O		4720-541-4104	FT1224-1 <83144>	.HOSE,AIR DUCT.....		EA		1	2	4	8		*	176	72
			1560-562-4971	S1630-80365 <78286>	.TUBE RPL-BY 1560-631-5755..										176	
P	O		1560-631-5755	S1630-80365-4 <78286>	.TUBE,ISOLATOR BRACKET,.....		EA		1	2	5	10		*	176	73
					COOLING,ENGINE MOUNT											
					RPLS-- 1560-562-4971											
			1560-340-0491	S1630-80369 <78286>	.COLLAR,POWER PLANT ENGINE...										176	
					RPL-BY 1560-566-3238											
P	F		1560-566-3238	S1630-80369-1 <78286>	.COLLAR,TUBE SUPPORT.....		EA		4	2	2	5		*	176	74
					RPLS-- 1560-340-0491											
					ATTACHING PARTS											
			5306-180-2769	AN3CH3A <88044>	.BOLT,MACHINE.....		HD		2	*	*	*		*	176	75
			5310-167-0812	AN960C10L <88044>	.WASHER,FLAT.....		HD		2	*	*	*		*	176	
					---*---											
			1560-340-0491	S1630-80369 <78286>	.COLLAR,POWER PLANT ENGINE...										176	
					RPL-BY 1560-566-3238											
P	F		1560-566-3238	S1630-80369-1 <78286>	.COLLAR,TUBE SUPPORT.....		EA		1	REF	REF	REF		REF	176	76
					RPLS-- 1560-340-0491											
					ATTACHING PARTS											
			5306-180-2769	AN3CH3A <88044>	.BOLT,MACHINE.....		HD		2	*	*	*		*	176	77
			5310-167-0812	AN960C10L <88044>	.WASHER,FLAT.....		HD		2	*	*	*		*	176	
					---*---											
P	F		1560-562-4973	S1630-80370 <78286>	.TUBE.....		EA		2	2	2	4		*	176	78
P	F		1560-562-4972	S1630-80366 <78286>	.TUBE.....		EA		1	2	2	4		*	176	79
P	F		1560-699-4370	S1630-80368-2 <78286>	.SECTION ASSEMBLY,FIRE SEAL..		EA		1	*	2	2		*	176	80
					RPLS-- 1560-098-1578											
P	F		1560-510-4094	S1630-80368-3 <78286>	.SECTION ASSEMBLY,FIRE SEAL..		EA		1	2	3	5		*	176	81
					RPLS-- 1560-098-1579											
P	F		1560-699-4369	S1630-80368-1 <78286>	.SECTION ASSEMBLY,FIRE SEAL..		EA		1	*	2	2		*	176	82
					RPLS-- 1560-098-1577											
					ATTACHING PARTS											
			5306-182-2014	AN4H3A <88044>	.BOLT,MACHINE.....		HD		4	*	*	*		*	176	83

(1) SOURCE, MAINT AND REC CODE (a) SOURCE CODE	(b) MAINT LEVEL	(c) REC CODE	(2) FEDERAL STOCK NUMBER	REFERENCE NUMBER	(3) DESCRIPTION	MODELS USABLE ON CH-34C	(4) UNIT OF ISSUE	(5) QTY INC IN UNIT PACK	(6) QTY INC IN UNIT	(7) 30-DAY DS/GS MAINT ALW (a) 1-20	(b) 21-50	(c) 51-100	(8) 1-YR ALW PER 100 EQUIP CNTGCY	(9) DEPOT MAINT ALW PER 100 EQUIP	(10) ILLUSTRATION (a) FIG NO	(b) ITEM NO
			5310-141-1795	AN960-416	<88044> .WASHER,FLAT.....		HD		4	*	*	*		*	176	
			5305-840-6694	MS24621-29	<96906> .SCREW,TAPPING,THREAD FORMING		HD		2	*	*	*		*	176	84
			5310-515-8058	AN960-8	<88044> .WASHER,FLAT.....		HD		2	*	*	*		*	176	
					---*---											
		T	2810-654-1504	R1820-84A	<66640> .ENGINE,AIRCRAFT..... RECIPROCATING RPL-BY 2810-953-9495 THIS ENGINE WILL BE FURNISHED LESS THE FOLLOWING COMPONENTS, CARBURETOR,2915-962-0077, PN 391722-5,MAGNETO, 2925-065-7746, PN 10-94500-2 SEE FIG. 183A FOR BREAKDOWN										176	
P	F	T	2810-953-9495	R1820-84C	<66640> .ENGINE,AIRCRAFT,..... RECIPROCATING RPLS-- 2810-654-1504 THIS ENGINE WILL BE FURNISHED LESS THE FOLLOWING COMPONENTS, CARBURETOR,2915-962-0077, PN 391722-5,MAGNETO, 2925-065-7746, PN 10-94500-2 SEE FIG. 183A FOR BREAKDOWN		EA		1	2	5	9	113	*	176	85
AF	F	T		S1635-91100-1	<78286> CLUTCH,FAN ASSEMBLY,..... TRANSMISSION SYSTEM SEE FIG.167 FOR NHA		EA								177	
P	F		5340-065-0655	MS5008-50	<96906> .BUSHING,TAPERED.....		EA		1	*	*	*		*	177	1
		T	1560-564-1503	S1635-91000-15	<78286> .CLUTCH ASSEMBLY RPL-BY..... 1615-083-6217										177	
		T	1560-591-6555	S1635-91000-18	<78286> .CLUTCH ASSEMBLY RPL-BY..... 1615-083-6217										177	
		T	1560-612-7198	S1635-91000-20	<78286> .CLUTCH ASSEMBLY RPL-BY..... 1615-083-6217										177	
		T	1560-614-1752	S1635-91000-22	<78286> .CLUTCH ASSEMBLY RPL-BY..... 1615-083-6217										177	
		T	1560-620-5609	S1635-91000-26	<78286> .CLUTCH ASSEMBLY RPL-BY..... 1615-083-6217										177	
		T	1560-620-6744	S1635-91000-24	<78286> .CLUTCH ASSEMBLY RPL-BY..... 1615-083-6217										177	
		T	1560-775-5956	S1635-91000-16	<78286> .CLUTCH ASSEMBLY RPL-BY..... 1615-083-6217										177	
		T	1560-624-3151	S1635-91101-1	<78286> .CLUTCH ASSEMBLY RPL-BY..... 1615-083-6217										177	
P	F	T	1615-083-6217	S1635-91101-8	<78286> .CLUTCH ASSEMBLY,..... HYDRO-MECHANICAL RPLS--		EA		1	2	6	11	137	*	177	2

(1) SOURCE, MAINT AND REC CODE (a) SOURCE CODE	(b) MAINT LEVEL	(c) REC CODE	(2) FEDERAL STOCK NUMBER	REFERENCE NUMBER		(3) DESCRIPTION	MODELS USABLE ON CH-34C	(4) UNIT OF ISSUE	(5) QTY INC IN UNIT PACK	(6) QTY INC IN UNIT	(7) 30-DAY DS/GS MAINT ALW (a) 1-20	(b) 21-50	(c) 51-100	(8) 1-YR ALW PER 100 EQUIP CNTGCY	(9) DEPOT MAINT ALW PER 100 EQUIP	(10) ILLUSTRATION (a) FIG NO	(b) ITEM NO
						CONTINUED 1560-564-1503, 1560-591-6555, 1560-612-7198, 1560-614-1752, 1560-620-5609, 1560-620-6744, 1560-624-3151,& 1560-775-5956 SEE FIG.178 FOR BREAKDOWN										177	2
P	F		1560-591-6648	S1635-91004	<78286>	.LOCK PIN ASSEMBLY,CLUTCH.... HYDRO-MECHANICAL		EA		1	*	*	*		*	177	3
P	F		1610-212-8722	MS5007-50	<96906>	.CONE,PROPELLER HUB-FRONT.... RPLS-- 1560-613-3046		EA		1	2	2	4	46	*	177	4
P	F		5310-305-7614	S1635-91033	<78286>	.NUT-ENGINE SHAFT.....		EA		1	2	2	4		*	177	5
		R	1560-671-5912	S1635-91102-1	<78286>	.FAN ASSEMBLY RPL-BY..... 1560-876-9665										177	
		R	1560-672-4050	S1635-91102-5	<78286>	.FAN ASSEMBLY RPL-BY..... 1560-876-9665										177	
		R	1560-714-0130	S1635-91102-6	<78286>	.FAN ASSEMBLY RPL-BY..... 1560-876-9665										177	
		R	1560-858-5937	S1635-91075-2	<78286>	.FAN ASSEMBLY RPL-BY..... 1560-876-9665										177	
		R	1680-305-4166	S1635-91005-1	<78286>	.FAN ASSEMBLY RPL-BY..... 1560-876-9665										177	
		R	1680-706-3061	S1635-91102	<78286>	.FAN ASSEMBLY RPL-BY..... 1560-876-9665										177	
		R	1680-706-3063	S1635-91102-2	<78286>	.FAN ASSEMBLY RPL-BY..... 1560-876-9665										177	
P	F	R	1560-876-9665	S1635-91102-8	<78286>	.FAN ASSEMBLY RPLS--..... 1560-671-5912, 1560-672-4050, 1560-714-0130, 1560-858-5937, 1680-305-4166, 1680-706-3061,& 1680-706-3063 SEE FIG.179 FOR BREAKDOWN		EA		1	2	2	5	55	*	177	6
P	F		1560-622-6369	S1635-91087	<78286>	..SPACER.....		EA		24	*	*	*		*	177	
P	F	T	1615-083-6217	S1635-91101-8	<78286>	CLUTCH ASSEMBLY,..... HYDRO-MECHANICAL RPLS-- 1560-564-1503, 1560-591-6555, 1560-612-7198, 1560-614-1752, 1560-620-5609,		EA			REF	REF	REF	REF		178	

(1) SOURCE, MAINT AND REC CODE (a) SOURCE CODE	(b) MAINT LEVEL	(c) REC CODE	(2) FEDERAL STOCK NUMBER	REFERENCE NUMBER		(3) DESCRIPTION	MODELS USABLE ON CH-34C	(4) UNIT OF ISSUE	(5) QTY INC IN UNIT PACK	(6) QTY INC IN UNIT	(7) 30-DAY DS/GS MAINT ALW (a) 1-20	(b) 21-50	(c) 51-100	(8) 1-YR ALW PER 100 EQUIP CNTGCY	(9) DEPOT MAINT ALW PER 100 EQUIP	(10) ILLUSTRATION (a) FIG NO	(b) ITEM NO
						CONTINUED 1560-620-6744, 1560-624-3151,& 1560-775-5956 SEE FIG.177 FOR NHA										178	
			2590-693-4120	47640	<70270>	.FITTING-RELIEF RPL-BY..... 4730-885-6381		EA							*	178	
P	D		4730-885-6381	S1635-91113	<78286>	.FITTING ASSEMBLY.....		EA		1	*	*	*		20	178	1
P	D		1615-305-4174	S1635-91059	<78286>	.RETAINER,ROLLER,BEARING..... RPLS-- 1560-306-4446		EA		1					*	178	2
P	D		1615-559-4758	S1635-91047-1	<78286>	.SPACER,RING.....		EA		1					*	178	3
P	D		1560-083-6761	S1635-91114	<78286>	.SPACER.....		EA		1	*	*	*		*	178	
P	D		3110-120-3089	B188	<60380>	.BEARING,ROLLER,NEEDLE.....		EA		1					*	178	4
			4730-278-3462	AN932-2	<88044>	.PLUG,PIPE.....NOTE 1		EA		2					*	178	5
P	D		1560-083-6757	S1635-91027-2	<78286>	.FLANGE,SPLINED.....		EA		1					*	178	6
P	D		1560-551-2089	S14-35-2236-1	<78286>	.SPACER,RING.....		EA		1					*	178	7
P	D		5330-071-5927	C40-801495-1	<80201>	.SEAL,PLAIN ENCASED USBL ON. PN S1635-91101-8		EA		2					*	178	
P	F		1615-639-0593	S1635-91038-3	<78286>	.BRACKET,ANGLE..... ATTACHING PARTS		EA		1	*	*	*		*	178	8
			5306-182-2061	AN3H10A	<88044>	.BOLT,MACHINE.....		HD		2	*	*	*		*	178	9
			5310-167-0818	AN960-10	<88044>	.WASHER,FLAT.....		HD		2	*	*	*		*	178	
			5310-877-5797	MS21044N3	<96906>	.NUT,SELF-LOCKING,HEXAGON.... ---*---		EA		2	*	*	*		*	178	
			5330-954-2739	MS29561-245	<96906>	.PACKING,PREFORMED.....		EA		1	*	*	*		*	178	
			3120-516-1803	NAS75-3-003	<80205>	..BUSHING,SLEEVE.....		EA		2	*	*	*		*	178	10
				S1635-91038-2	<78286>	..CLIP.....		EA		2						178	11
			5306-182-2060	AN3H7A	<88044>	.BOLT,MACHINE.....		HD		21	*	*	*		*	178	12
			5310-167-0818	AN960-10	<88044>	.WASHER,FLAT.....		HD		42	*	*	*		*	178	
			5310-877-5797	MS21044N3	<96906>	.NUT,SELF-LOCKING,HEXAGON....		EA		21	*	*	*		*	178	
			5310-167-0818	AN960-10	<88044>	.WASHER,FLAT.....		HD		1	*	*	*		*	178	13
			5310-877-5797	MS21044N3	<96906>	.NUT,SELF-LOCKING,HEXAGON....		EA		1	*	*	*		*	178	
		U	3110-271-0042	SB1550-1	<78286>	.BEARING,BALL,ANNULAR..... RPL-BY 3110-969-8657		EA								178	
P	D	U	3110-969-8657	SB1557-1	<78286>	.BEARING,BALL,ANNULAR..... RPLS-- 3110-271-0042		EA		1					*	178	14
			1560-639-0595	S1635-91095	<78286>	.PLATE,IDENTIFICATION..... RPL-BY 1560-851-2220										178	
P	F		1560-851-2220	S1635-91095-1	<78286>	.PLATE,IDENTIFICATION..... RPLS-- 1560-639-0595		EA		1	*	2	2		*	178	15
P	D		1615-083-6759	S1635-91003-5	<78286>	.RETAINER ASSEMBLY.....		EA		1					*	178	16
				S1635-91021	<78286>	..RING-STIFFENER..... ATTACHING PARTS		EA		1						178	17
			5320-117-6951	MS20426AD4-6	<96906>	..RIVET,SOLID..... ---*---		LB		6					*	178	18
			5305-145-6971	AN503-8-6	<88044>	..SCREW,MACHINE.....		HD		30					*	178	19
X1				S14-35-2391-1	<78286>	..RING.....		EA		1						178	20
X1				S14-35-2514	<78286>	..RING,HYDRO-MECHANICAL..... CLUTCH WHEN EXHTD RQTN NHA 1560-624-3177		EA		1						178	
P	D		1615-923-0580	S14-35-2514-1	<78286>	.RING.....		EA		1					*	178	
			1560-600-2202	S14-35-2390-2	<78286>	..HOUSING,BEARING.....		EA								178	

(1) SOURCE, MAINT AND REC CODE (a) SOURCE CODE	(b) MAINT LEVEL	(c) REC CODE	(2) FEDERAL STOCK NUMBER	REFERENCE NUMBER	(3) DESCRIPTION	MODELS USABLE ON CH-34C	(4) UNIT OF ISSUE	(5) QTY INC IN UNIT PACK	(6) QTY INC IN UNIT	(7) 30-DAY DS/GS MAINT ALW (a) 1-20	(b) 21-50	(c) 51-100	(8) 1-YR ALW PER 100 EQUIP CNTGCY	(9) DEPOT MAINT ALW PER 100 EQUIP	(10) ILLUSTRATION (a) FIG NO	(b) ITEM NO
P	D		1615-941-5600	S14-35-2390-4 <78286>	..RETAINER,OIL SEAL.....		EA		1					*	178	21
			1560-600-2212	S14-35-2513 <78286>	..GASKET RPL-BY..... 1560-798-7760										178	
P	D		5330-798-7760	S14-35-2513-1 <78286>	..GASKET RPLS--..... 1560-600-2212		EA		1					*	178	22
P	F		1560-697-8477	S1635-91022 <78286>	.GASKET.....		EA		1					*	178	24
			5330-641-0178	S14-35-2452-1 <78286>	.WASHER,NONMETALLIC..... OBS-AFT-COMP-W ECP SA-H-34-2152		EA								178	25
			1560-304-4642	S1635-91023 <78286>	.SHIELD-FLUID COUPLING..... RPL-BY 1615-614-1754										178	
P	D		1615-614-1754	S1635-91023-1 <78286>	.SHIELD-FLUID COUPLING..... RPLS-- 1560-304-4642 ATTACHING PARTS		EA		1					5	178	26
			5306-182-2056	AN3H3A <88044>	.BOLT,MACHINE.....CODE A		HD		20					*	178	27
			5310-183-4406	AN960PD10 <88044>	.WASHER,FLAT.....CODE A		HD		20					*	178	
P	D		5310-637-8111	S14-35-2470 <78286>	.WASHER,KEY..... ---*---		EA		20					10	178	28
			5310-598-9160	MS172346 <96906>	.NUT,PLAIN,ROUND.....		EA		1	*	*	*		*	178	29
			5310-584-5329	MS172296 <96906>	.WASHER,KEY.....		EA		1	*	*	*		*	178	30
P	D		1560-304-4637	S1635-91002 <78286>	.RUNNER ASSEMBLY,TRANSMISSION ATTACHING PARTS		EA		1					5	178	31
			5310-807-1468	MS21042-4 <96906>	.NUT,SELF-LOCKING,HEXAGON.... ---*---		HD		8					*	178	32
P	D		5340-321-6370	5108-87 <79136>	.RING,RETAINING.....		EA		1					*	178	33
			1560-397-1586	S14-35-2237 <78286>	.STOP,ACTUATOR RPL-BY..... 1560-565-8484										178	
P	D		1560-565-8484	S14-35-2237-2 <78286>	.STOP,ACTUATOR RPLS--..... 1560-397-1586		EA		1					*	178	34
			5340-804-6897	MS16624-1021 <96906>	.RING,RETAINING.....		EA		4					*	178	35
P	D		5315-664-7208	S14-35-2440 <78286>	.PIN,GROOVED,HEADLESS.....		EA		2					*	178	36
			1560-098-1521	S14-35-2510 <78286>	.FLYWEIGHT RPL-BY..... 1560-564-5718										178	
P	D		1615-564-5718	S14-35-2510-3 <78286>	.FLYWEIGHT RPLS--..... 1560-098-1521, 1560-313-0564,& 1560-333-7926		EA		2					*	178	37
P	D		5340-285-7939	RR354 <80756>	.RING,RETAINER.....		EA		1					*	178	38
P	D		1615-620-5616	S14-35-2227-1 <78286>	.PLATE,HYDRO CLUTCH..... RPLS-- 1560-397-1585		EA		1					*	178	39
			1560-620-5617	S1635-91094 <78286>	.SPRING,WAVE RPL-BY..... 1560-717-6922										178	
P	D		1560-717-6922	S1635-91094-2 <78286>	.SPRING,WAVE RPLS--..... 1560-620-5617		EA		61					*	178	40
			5340-282-6303	RR412 <80756>	.RING,RETAINER RPL-BY..... 5340-721-8963		EA								178	
P	D		5340-721-8963	RR400 <80756>	.RING,RETAINING.....		EA		1					20	178	41
			1560-532-7397	S1635-91044-3 <78286>	.HOUSING-DRIVE RPL-BY..... 1615-083-6758										178	
			1615-614-1755	S1635-91044-5 <78286>	.HOUSING-DRIVE RPL-BY..... 1615-083-6758										178	
P	D		1615-083-6758	S1635-91044-7 <78286>	.HOUSING,MECHANICAL.....		EA		1					*	178	42

(1) SOURCE, MAINT AND REC CODE (a) SOURCE CODE	(b) MAINT LEVEL	(c) REC CODE	(2) FEDERAL STOCK NUMBER	REFERENCE NUMBER	(3) DESCRIPTION	MODELS USABLE ON CH-34C	(4) UNIT OF ISSUE	(5) QTY INC IN UNIT PACK	(6) QTY INC IN UNIT	(7) 30-DAY DS/GS MAINT ALW (a) 1-20	(b) 21-50	(c) 51-100	(8) 1-YR ALW PER 100 EQUIP CNTGCY	(9) DEPOT MAINT ALW PER 100 EQUIP	(10) ILLUSTRATION (a) FIG NO	(b) ITEM NO
			5330-914-1826	MS29561-343	<96906> .PACKING,PREFORMED.....		EA		1					*	178	
P	D		5310-083-9020	S1635-91110-1	<78286> .NUT.....		EA							*	178	
			5330-819-0167	63X6599R2	<73680> .SEAL,TAIL ROTOR HUB-KLOZURE. RPL-BY 5330-796-5198										178	
			5330-895-3890	23702-6599	<73680> .SEAL RPL-BY 5330-083-9019...										178	
P	D		5330-083-9019	21686	<08724> .SEAL..... RPLS-- 5330-895-3890		EA		1					*	178	43
			5310-209-2931	S1635-91024	<78286> .WASHER,RECESSED USE UNTIL.. EXHAUSTED,NO REPLACEMENT		EA		1						178	44
P	D		5340-514-0355	RS87	<80756> .RING,RETAINING.....		EA		1					*	178	45
			1560-397-1607	S14-35-2439	<78286> .SLEEVE ASSEMBLY-ACTUATOR.... RPL-BY 1560-624-3179										178	
			1615-305-1661	S1635-91054	<78286> .SLEEVE ASSEMBLY-ACTUATOR.... RPL-BY 1560-624-3179										178	
			1560-600-2197	S1635-91054-1	<78286> .SLEEVE ASSEMBLY-ACTUATOR.... RPL-BY 1560-624-3179										178	
P	D		1615-624-3179	S1635-91054-2	<78286> .SLEEVE ASSEMBLY-ACTUATOR.... RPLS--1560-397-1607, 1560-600-2197,& 1615-305-1661		EA		1					*	178	46
P	F		5315-328-5174	S1635-91052	<78286> ..PIN,STRAIGHT,HEADLESS..... ATTACHING PARTS		EA		2	*	*	*		*	178	47
			5320-243-8361	MS20470AD2-10	<96906> ..RIVET,SOLID..... ---*---		LB		1	*	*	*		*	178	48
			1615-663-2851	S1635-91063	<78286> .SPRING,HELICAL,COMPRESSION.. RPL-BY 1615-622-3846										178	
P	D		1615-622-3846	S1635-91098	<78286> .SPRING,HELICAL,COMPRESSION.. RPLS-- 1560-663-2851		EA		1					*	178	49
P	D		5340-598-1875	S14-35-2447	<78286> .RING,RETAINING.....		EA		1					*	178	50
P	D		5340-624-3176	S14-35-2527	<78286> .RING,RETAINING.....		EA		1					*	178	
P	D		1615-606-8364	MS999-59470-9900	<96906> .ROLLER,BEARING.....		EA		12					50	178	51
P	D		1560-624-3181	S1635-9190	<78286> .RETAINER,BEARING RPLS--..... 1560-304-4697 OBSLTS 1560-332-6556		EA		1					*	178	52
			1560-304-4647	S1635-91045	<78286> .RETAINER,BEARING..... RPL-BY 1560-624-3181										178	
			1560-332-6556	S1635-91045-1	<78286> .RETAINER,BEARING..... OBS AFT-CMPL-W TM1-H-34A-1036										178	
P	D		5330-611-8010	S14-35-2520	<78286> .WASHER,THRUST RPLS--..... 1560-624-3180		EA		1					*	178	53
P	D		5330-083-9019	2168C	<08724> .SEAL,PLAIN ENCASED USBL.... ON PN S1635-91101-8		EA		1					*	178	
P	D	U	3110-624-3624	SB1115-1	<78286> .BEARING,BALL,ANNULAR.....		PR		1					90	178	54
			1560-305-4170	S1635-91043	<78286> .CAM,FREEWHEEL,CLUTCH..... RPL-BY 1615-083-6760										178	
			1560-346-1168	S1635-91043-3	<78286> .CAM,CLUTCH RPL-BY..... 1615-083-6760										178	
			1560-564-1504	S1635-91043-4	<78286> .CAM-FREEWHEEL RPL-BY..... 1615-083-6760										178	
P	D		1615-083-6760	S1635-91043-7	<78286> .CAM,CLUTCH,FREE CLUTCH..... RPLS-- 1560-305-4170		EA		1					*	178	55

(1) SOURCE, MAINT AND REC CODE (a) SOURCE CODE	(b) MAINT LEVEL	(c) REC CODE	(2) FEDERAL STOCK NUMBER	REFERENCE NUMBER	(3) DESCRIPTION	MODELS USABLE ON CH-34C	(4) UNIT OF ISSUE	(5) QTY INC IN UNIT PACK	(6) QTY INC IN UNIT	(7) 30-DAY DS/GS MAINT ALW (a) 1-20	(b) 21-50	(c) 51-100	(8) 1-YR ALW PER 100 EQUIP CNTGCY	(9) DEPOT MAINT ALW PER 100 EQUIP	(10) ILLUSTRATION (a) FIG NO	(b) ITEM NO
					CONTINUED										178	55
					1560-346-1168,&											
					1560-564-1504											
P	D		5330-057-6953	MS29561-329 <96906>	.PACKING,PREFORMED USBL ON..		EA		1					*	178	
					PN S1635-91101-8											
			1615-527-7067	S1635-91039 <78286>	.PACKING,PREFORMED RPL-BY...										178	
					1560-618-2531											
			1615-591-9708	S1635-91039-2 <78286>	.RING-PACKING RPL-BY.....										178	
					1560-618-2531											
P	D		1615-618-2531	S1635-91097 <78286>	.PACKING,PREFORMED RPLS--...		EA		1					100	178	56
					1560-527-7067,											
					1560-591-9708											
			5305-271-5230	AN502-10-4 <88044>	.SCREW,MACHINE.....		EA		1					*	178	57
P	D		5310-514-8223	S14-35-2385 <78286>	.NUT,PLAIN,ROUND.....		EA		1					*	178	58
			1560-305-4173	S1635-91058 <78286>	.IMPELLER ASSEMBLY.....										178	
					OBS-BY 1560-862-5551											
P	D		1560-862-5551	S1635-91058-1 <78286>	.IMPELLER ASSEMBLY.....		EA		1					*	178	59
					OBSLTS 1560-305-4173											
			5310-807-1468	MS21042-4 <96906>	.NUT,SELF-LOCKING,HEXAGON....		HD		8					*	178	60
					---*---											
			1560-305-1660	S1635-91051 <78286>	.IMPELLER FLANGE.....										178	
					OBS-BY 1560-862-5552											
			1560-672-9451	S1635-91051-2 <78286>	.FLANGE,IMPELLER OBS-BY.....										178	
					1560-862-5552											
P	D		1560-862-5552	S1635-91051-3 <78286>	.FLANGE,IMPELLER.....		EA		1					*	178	61
					OBSLTS 1560-305-1660,											
					1560-672-9451											
			5330-641-0178	S14-35-2452-1 <78286>	.WASHER,NONMETALLIC.....		EA								178	62
					OBST-AFT-COMP-W											
					ECP SA-H-34-2152											
P	D	U	3110-271-0042	SB1550-1 <78286>	.BEARING,BALL,ANNULAR.....		EA		1					REF	178	63
					RPLS-- 3110-277-0774											
P	D	U	3110-969-8657	SB1557-1 <78286>	.BEARING,BALL,ANNULAR USBL..		EA		1					*	178	
					ON PN S1635-91101-8											
P	D		1615-765-9621	S1635-91008-2 <78286>	.COVER ASSEMBLY-IMPELLER.....		EA		1					10	178	64
X1				S1635-91016-2 <78286>	..COVER.....		EA		1						178	
P	D		5315-297-3454	S11-35-4746 <78286>	..PIN,STRAIGHT,HEADLESS.....		EA		1					*	178	65
			1560-987-3311	S1635-91041-1 <78286>	..LINER,CLUTCH,TRANSMISSION..		EA								178	
					RPL-BY 5310-209-2932											
P	D		5310-209-2932	S1635-91041 <78286>	..LINER,CLUTCH,TRANSMISSION..		EA		1					*	178	66
					RPLS--1560-987-331											
P	D		5310-281-9224	RL21SB6 <83324>	..RING,LOCK,SERRATED.....		EA		1					REF	178	67
P	D		5307-025-8272	SF91-7SA11A <83324>	..STUD,LOCKED IN.....		EA		1					40	178	68
P	D		5310-682-5877	RL28SB8 <83324>	..RING,LOCK,SERRATED.....		HD		3					REF	178	69
P	D		5307-025-8292	SF111-11SA13A <83324>	..STUD,LOCKED IN.....		EA		1					REF	178	70
			1560-591-6645	S1635-91086 <78286>	.SPACER OBS-BY.....										178	
					1615-083-6756											
P	D		1615-083-6756	S1635-91115 <78286>	.SPACER.....		EA		1					*	178	71
			1560-601-0344	S1635-91085 <78286>	.COUPLING,CLUTCH DRIVE.....										178	
					OBS-BY 1560-083-6762											
P	D		1560-083-6762	S1635-91085-3 <78286>	.CLUTCH DRIVE,COUPLING.....		EA		1					*	178	72
					CODE A											

(1) SOURCE, MAINT AND REC CODE (a) SOURCE CODE	(b) MAINT LEVEL	(c) REC LEVEL CODE	(2) FEDERAL STOCK NUMBER	REFERENCE NUMBER	(3) DESCRIPTION	MODELS USABLE ON CH-34C	(4) UNIT OF ISSUE	(5) QTY INC IN UNIT PACK	(6) QTY INC IN UNIT	(7) 30-DAY DS/GS MAINT ALW (a) 1-20	(b) 21-50	(c) 51-100	(8) 1-YR ALW PER 100 EQUIP CNTGCY	(9) DEPOT MAINT ALW PER 100 EQUIP	(10) ILLUSTRATION (a) FIG NO	(b) ITEM NO
					CONTINUED USBL EFF 57-1733 & SUBSEQUENT NOTE 1 COMPONENT OF KIT 1560-715-2262										178	
P	F	R	1560-876-9665	S1635-91102-8 <78286>	FAN ASSEMBLY RPLS--..... 1560-671-5912, 1560-672-4050, 1560-714-0130, 1560-858-5937, 1680-305-4166, 1680-706-3061,& 1680-706-3063 SEE FIG.177 FOR NHA		EA			REF	REF	REF	REF		179	
P	F		1560-671-5925	S1635-91088 <78286>	.FAN BLADE,CLUTCH..... ATTACHING PARTS		EA		24	4	11	21		*	179	1
P	F		1560-671-5926	S1635-91091 <78286>	.SPACER.....		EA		24	*	*	*		*	179	
P	F		1560-671-5926	S1635-91091 <78286>	.SPACER..... U/O 1560-672-4050 ATTACHING PARTS		EA		24	*	*	*		*	179	
			5306-180-2785	AN175-30A <88044>	.BOLT,MACHINE.....		EA		1	*	*	*		*	179	2
			5310-194-0636	AN122583 <88044>	.WASHER,THRUST.....		EA		2	*	*	*		*	179	3
P	F		5310-209-6374	S1635-91037 <78286>	.WASHER,FLAT.....		EA		AR	13	32	63		*	179	4
			5310-194-0636	AN122583 <88044>	.WASHER,THRUST.....		EA		AR	*	*	*		*	179	5
			5310-088-0553	MS21044N5 <96906>	.NUT,SELF-LOCKING,HEXAGON.... ---*---		HD		1	*	*	*		*	179	6
X2	D			S1635-91093-1 <78286>	.RING,CLAMPING.....		EA		4						179	7
AF	F			S1635-91006 <78286>	.HUB ASSEMBLY,CLUTCH..... ATTACHING PARTS		EA		1						179	9
			5310-184-8974	AN122584 <88044>	.WASHER,THRUST.....		EA		23	*	*	*		*	179	10
			5310-950-C039	MS21044N6 <96906>	.NUT,SELF-LOCKING,HEXAGON.... ---*---		HD		23	*	*	*		*	179	
P	F		1560-334-6367	S1635-91007 <78286>	..PLATE ASSEMBLY,CLUTCH..... RETAINER ATTACHING PARTS		EA		1	*	2	2		*	179	11
			5305-689-5973	MS24693A273 <88044>	..SCREW,MACHINE.....		EA		3	*	*	*		*	179	12
			5310-877-5798	MS21044D3 <96906>	..NUT,SELF-LOCKING,HEXAGON... ---*---		EA		3	*	*	*		*	179	
X2	F		5340-596-7201	6800-064 <80539>	...RETAINER,NUT AND BOLT.....		EA		23					100	179	13
P	F		5306-563-6720	S1635-91076 <78286>	...BOLT,MACHINE.....		EA		23	2	3	5		100	179	15
P	F		5315-664-8575	S1535-91117 <78286>	..PIN,GROOVED,HEADED.....		EA		5	2	6	12		*	179	16
P	F		1615-339-9573	S1635-91028 <78286>	..HUB,TRANSMISSION..... HYDRO-MECHANICAL CLUTCH		EA		1	*	2	2		*	179	17
P	F		1560-563-9949	S1635-91073 <78286>	.RING,CLAMPING..... HYDRO-MECHANICAL CLUTCH		EA		1	2	2	4		*	179	18
P	F		1560-525-5671	S1635-91072 <78286>	.SHIM,HYDRO-MECHANICAL CLUTCH		EA		1	3	8	15		*	179	19

(1) SOURCE, MAINT AND REC CODE (a) SOURCE CODE	(b) MAINT LEVEL	(c) REC CODE	(2) FEDERAL STOCK NUMBER	REFERENCE NUMBER		(3) DESCRIPTION	MODELS USABLE ON CH-34C	(4) UNIT OF ISSUE	(5) QTY INC IN UNIT PACK	(6) QTY INC IN UNIT	(7) 30-DAY DS/GS MAINT ALW (a) 1-20	(b) 21-50	(c) 51-100	(8) 1-YR ALW PER 100 EQUIP CNTGCY	(9) DEPOT MAINT ALW PER 100 EQUIP	(10) ILLUSTRATION (a) FIG NO	(b) ITEM NO
			1560-323-4313	S1635-91070	<78286>	.DISK ASSEMBLY,..... HYDRO-MECHANICAL CLUTCH RPL-BY 1560-876-9887										179	
P	F		1560-876-9887	S1635-91083-2	<78286>	.DISK ASSEMBLY RPLS--..... 1560-323-4313		EA		1	*	*	*		*	179	21
X1				S1635-91068	<78286>	..RING,FAN,HYDRO-MECHANICAL.. CLUTCH-UPPER		EA		1						179	
X1				S1635-91069	<78286>	..RING,FAN,HYDRO-MECHANICAL.. CLUTCH-LOWER		EA		1						179	
						ATTACHING PARTS											
			5310-877-5796	MS21044N4	<96906>	..NUT,SELF-LOCKING HEXAGON...		EA		48		*	*		*	179	22
			5310-932-3224	MS9320-10	<96906>	..WASHER,FLAT.....		EA		96		*	*		*	179	23
			5306-151-1423	AN4-11A	<88044>	..BOLT,MACHINE.....		EA		48		*	*		*	179	24
						---*---											
			1560-446-6344	S1655-80000-2	<78286>	ELECTRICAL WIRING..... INSTALLATION SEE FIG.167 FOR NHA		EA			*	*	*			180	
				S1655-80190	<78286>	.CONDUIT INSTALLATION..... IGNITION				1						180	
			5935-849-3867	MS3108R14S7P	<96906>	..CONNECTOR,PLUG,ELECTRICAL..		EA		1	*	*	*		*	180	1
MF	F			S1655-80182	<78286>	..SUPPORT..... MAKEFR		EA		1						180	2
						AR 9330-290-3461 PLASTIC SH											
						ATTACHING PARTS											
			5305-281-8527	AN525-832R8	<88044>	..SCREW,MACHINE.....		HD		4	*	*	*		*	180	3
			5310-515-8058	AN960-8	<88044>	..WASHER,FLAT.....		HD		4	*	*	*		*	180	
			5310-807-1466	MS21042-08	<96906>	..NUT,SELF-LOCKING,HEXAGON...				4	*	*	*		*	180	
						---*---											
			5935-805-4991	MS3106R14S7S	<96906>	..CONNECTOR,PLUG,ELECTRICAL..		EA		1	*	*	*		*	180	4
P	F		5975-591-0562	S1655-80191	<78286>	..CONDUIT ASSEMBLY.....		EA		1	*	*	*		*	180	5
P	F		1560-440-1801	10-42664-2S	<06840>	...PLUG.....		EA		1	*	*	*		*	180	
P	F		1560-658-6199	S1530-80227-1	<78286>	.BRACKET,ENGINE WIRING.....		EA		4	*	2	2		*	180	6
						ATTACHING PARTS											
			5305-558-8934	AN525D10R8	<88044>	.SCREW,MACHINE.....		HD		1	*	*	*		*	180	
			5310-183-4406	AN960PD10	<88044>	.WASHER,FLAT.....		HD		1	*	*	*		*	180	
			5310-877-5798	MS21044D3	<96906>	.NUT,SELF-LOCKING,HEXAGON....		EA		1	*	*	*		*	180	
						---*---											
P	F		1560-075-2539	S1530-80227-2	<78286>	.BRACKET.....		EA		1	REF	REF	REF		REF	180	7
						ATTACHING PARTS											
			5305-558-8934	AN525D10R8	<88044>	.SCREW,MACHINE.....		HD		1	*	*	*		*	180	
			5310-183-4406	AN960PD10	<88044>	.WASHER,FLAT.....		HD		1	*	*	*		*	180	
			5310-877-5797	MS21044N3	<96906>	.NUT,SELF-LOCKING,HEXAGON....		EA		1	*	*	*		*	180	
						---*---											
			5935-805-4989	MS3108R12S3S	<96906>	.CONNECTOR,PLUG,ELECTRICAL...		EA		1	*	*	*		*	180	
				MS3108E20-27P	<96906>	.PLUG.....		EA		1						180	8
MF	F			S1655-80183	<78286>	.SUPPORT.....		EA		1						180	9

(1) SOURCE, MAINT AND REC CODE (a) SOURCE CODE	(b) MAINT LEVEL	(c) REC CODE	(2) FEDERAL STOCK NUMBER	REFERENCE NUMBER		(3) DESCRIPTION	MODELS USABLE ON CH-34C	(4) UNIT OF ISSUE	(5) QTY INC IN UNIT PACK	(6) QTY INC IN UNIT	(7) 30-DAY DS/GS MAINT ALW (a) 1-20	(b) 21-50	(c) 51-100	(8) 1-YR ALW PER 100 EQUIP CNTGCY	(9) DEPOT MAINT ALW PER 100 EQUIP	(10) ILLUSTRATION (a) FIG NO	(b) ITEM NO
						CONTINUED										180	9
						MAKEFR											
						AR 9330-576-3983 PLASTIC SH											
			5305-180-0004	AN525-8R8	<88044>	.SCREW,MACHINE.....		HD		4	*	*	*		*	180	10
			5310-515-8058	AN960-8	<88044>	.WASHER,FLAT.....		HD		4	*	*	*		*	180	
			5310-941-6440	MS21083D08	<96906>	.NUT,SELF-LOCKING,HEXAGON....				4	*	*	*		*	180	
				S1665-80000-1	<78286>	HYDRAULIC SYSTEM LINES.....										181	
						INSTALLATION SEE FIG.167											
						FOR NHA											
			1560-445-3482	S1665-61533-95	<78286>	.TUBE ASSEMBLY.....		EA		1	*	*	*			181	1
						MAKEFR											
						AR 4710-278-6398 TUBE											
						2 EA 4730-278-0678 SLEEVE											
						2 EA 4730-334-7845 NUT											
			4730-334-7845	AN818-4	<88044>	..NUT.....		EA		1	*	*	*		*	181	2
			4730-278-0678	MS20819-4	<96906>	..SLEEVE,FLARED,TUBE FITTING.		EA		1	*	*	*		*	181	3
				S1665-61533-96	<78286>	..TUBE ASSEMBLY.....		EA		1						181	4
P	O		4730-958-8194	1-160-317-01	<91547>	..BOLT,FLUID PASSAGE.....		EA		1	*	*	*		*	181	
			5310-656-0094	MS24400-4	<96906>	.NUT,PLAIN,HEXAGON.....		LL		1	*	*	*		*	181	5
			5310-187-2401	AN960PD716	<88044>	.WASHER,FLAT.....		HD		1	*	*	*		*	181	
			4730-230-8710	AN837-4	<88044>	.ELBOW,TUBE.....		EA		1	*	*	*		*	181	
P	F		4720-868-5799	MS27363E0140	<96906>	.HOSE ASSEMBLY.....		EA		1	*	*	*		*	181	6
MF	O			4720EG003-4C0170	<81996>	.HOSE ASSEMBLY,RUBBER.....		EA		1						181	
						MAKEFR											
						AR 4720-857-1732 HOSE											
						2 EA 4730-952-5532 NIPPLE											
						2 EA 4730-967-9513 SOCKET											
						2 EA 4730-967-9521 SLEEVE											
						2 EA 5340-834-8330 DUST PLUG											
			4730-277-6372	AN6289-4	<88044>	.LOCKNUT,TUBE FITTING.....		EA		1	*	*	*		*	181	7
			5330-805-2966	MS28778-4	<96906>	.PACKING,PREFORMED.....		EA		1	REF	REF	REF	REF	*	181	
			5330-186-4947	MS28777-4	<96906>	.WASHER,NONMETALLIC.....		LL		1	*	*	*		*	181	
			4730-230-8710	AN837-4	<88044>	.ELBOW,TUBE.....		EA		1	*	*	*		*	181	
MF	O			EAB380-10-0190-180	<81996>	.HOSE ASSEMBLY,.....		EA		1						181	8
						TETRAFLUOROETHYLENE											
						MAKEFR											
						AR 4720-857-1730 HOSE											
						2 EA 4730-052-9520 ELBOW											
						2 EA 4730-967-9517 NUT											
						2 EA 4730-967-9525 SLEEVE											
						2 EA 5340-726-3009 PLUG											
MF	O			150-666104-10-0170	<00624>	.HOSE ASSEMBLY,.....		EA		1						181	
						TETRAFLUOROETHYLENE											
						RPLS-- 4720-587-6307,											
						4720-587-6310,&											

(1) SOURCE, MAINT AND REC CODE (a) SOURCE CODE	(b) MAINT LEVEL	(c) REC LEVEL CODE	(2) FEDERAL STOCK NUMBER	REFERENCE NUMBER		(3) DESCRIPTION	MODELS USABLE ON CH-34C	(4) UNIT OF ISSUE	(5) QTY INC IN UNIT PACK	(6) QTY INC IN UNIT	(7) 30-DAY DS/GS MAINT ALW (a) 1-20	(b) 27-50	(c) 51-100	(8) 1-YR ALW PER 100 EQUIP CNTGCY	(9) DEPOT MAINT ALW PER 100 EQUIP	(10) ILLUSTRATION (a) FIG NO	(b) ITEM NO
						CONTINUED										181	
						4720-625-8719											
						MAKEFR											
						AR 4720-857-1730 HOSE											
						2 EA 4730-052-9520 ELBOW											
						2 EA 4730-967-9517 NUT											
						2 EA 4730-967-9525 SLEEVE											
						2 EA 5340-726-3009 PLUG											
X1				S1665-20058-32	<78286>	..HOSE.....		EA		1						181	9
				S1665-20058-16	<78286>	..HOSE.....		EA		1						181	
			4730-805-5100	MS24399D21	<96906>	.REDUCER,TUBE.....		EA		1	*	*	*		*	181	10
			5330-251-8839	MS28778-12	<96906>	.PACKING,PREFORMED.....		EA		1	REF	REF	REF		*	181	
AO	O			155-10	<00624>	.COUPLING ASSEMBLY,.....		EA		1						181	11
						SELF-SEALING											
						ATTACHING PARTS											
			5305-180-0010	AN525-10R8	<88044>	.SCREW,MACHINE.....		HD		6	*	*	*		*	181	12
			5310-877-5797	MS21044N3	<96906>	.NUT,SELF-LOCKING,HEXAGON....		EA		6	*	*	*		*	181	
						---*---											
P	O		4730-640-1313	155S4-10D	<00624>	..COUPLING,HALF,SELF-SEALING.		EA		1	*	*	*		REF	181	13
X1				C155-25-12	<00624>	...NUT,COUPLING,SELF-SEALING.		EA		2						181	14
P	O		4730-554-7738	155S5-10D	<00624>	..COUPLING,HALF,SELF-SEALING.		EA		1	REF	REF	REF		REF	181	15
				4720EG006-8C0170-150	<81996>	.HOSE ASSEMBLY.....		EA		1						181	16
						TETRAFLUOROETHYLENE											
			4730-684-7450	MS24399D16	<96906>	.REDUCER,TUBE.....		EA		1	REF	REF	REF		*	181	17
			5330-285-9842	MS28778-10	<96906>	.PACKING,PREFORMED.....		EA		1	REF	REF	REF	REF	*	181	
AO	O			155-8D	<00624>	.COUPLING ASSEMBLY.....		EA		2						181	18
						ATTACHING PARTS											
			5305-180-0010	AN525-10R8	<88044>	.SCREW,MACHINE.....		HD		6	*	*	*		*	181	19
			5310-877-5797	MS21044N3	<96906>	.NUT,SELF-LOCKING,HEXAGON....		EA		6	*	*	*		*	181	
						---*---											
			4730-540-0392	155S4-8D	<00624>	..COUPLING,HALF,.....		EA			*	*	*			181	
						SELF-SEALING RPL-BY											
						4730-540-0392											
P	F		4730-540-0392	TB155S4-8D	<00624>	..COUPLING,HALF,.....		EA		1	*	*	*		*	181	20
						SELF-SEALING RPLS--											
						4730-394-2469											
X1				C155-25-12	<00624>	...NUT,COUPLING,SELF-SEALING.		EA		2						181	21
P	O		4730-554-7737	155S5-8D	<00624>	..COUPLING,HALF,SELF-SEALING.		EA		1	*	*	*		REF	181	22
			1560-631-1553	S1565-80064-51	<78286>	.HOSE ASSEMBLY USE UNTIL....										181	
						EXHAUSTED,THEN REQUISITION											
						4720-780-2833											
			4720-274-9294	MS28741-6-0144	<96906>	.HOSE ASSEMBLY USE UNTIL....										181	
						EXHAUSTED,THEN REQUISITION											
						4720-780-2833											
			4720-560-9976	S1530-90910-3	<78286>	.HOSE ASSEMBLY USE UNTIL....										181	
						EXHAUSTED,THEN REQUISITION											
						4720-780-2833											
MF	O			4720EG003-6C0150	<81996>	.HOSE ASSEMBLY,.....		EA		1						181	23
						MAKEFR											
						AR 4720-857-1731 HOSE											
						2 EA 4730-952-5529 NIPPLE											
						2 EA 4730-967-9515 SOCKET											

(1) SOURCE, MAINT AND REC CODE (a) SOURCE CODE	(b) MAINT LEVEL	(c) REC CODE	(2) FEDERAL STOCK NUMBER	REFERENCE NUMBER	(3) DESCRIPTION	MODELS USABLE ON CH-34C	(4) UNIT OF ISSUE	(5) QTY INC IN UNIT PACK	(6) QTY INC IN UNIT	(7) 30-DAY DS/GS MAINT ALW (a) 1-20	(b) 21-50	(c) 51-100	(8) 1-YR ALW PER 100 EQUIP CNTGCY	(9) DEPOT MAINT ALW PER 100 EQUIP	(10) ILLUSTRATION (a) FIG NO	(b) ITEM NO
					CONTINUED										181	23
					2 EA 4730-967-9523 SLEEVE											
					2 EA 5340-988-6032 DUST PLUG											
				4720EG003-6C0160 <81996>	.HOSE ASSEMBLY-PUMP BY-PASS..		EA		1						181	
MF	O			4720EG003-8C0160 <81996>	.HOSE ASSEMBLY-PUMP BY-PASS..		EA		1						181	
					MAKEFR											
					AR 4720-815-6354 HOSE											
					2 EA 4730-952-5528 NIPPLE											
					2 EA 4730-965-1121 SLEEVE											
					2 EA 4730-967-9516 SOCKET											
					2 EA 5340-433-3269 DUST PLUG											
			4730-277-5084	AN6289-6 <88044>	.LOCKNUT,TUBE FITTING.....		EA		1	*	*	*		*	181	24
			5330-804-5695	MS28778-6 <96906>	.PACKING,PREFORMED.....		EA		1	REF	REF	REF		*	181	
			5330-186-1295	MS28777-6 <96906>	.WASHER,NONMETALLIC.....		EA		1	REF	REF	REF		*	181	
			4730-684-6922	MS24394D6 <96906>	.ELBOW,TUBE.....		EA		1	*	*	*		*	181	
P	O		4730-433-2583	1556D <00624>	.COUPLING ASSEMBLY.....		EA		1	*	*	*		REF	181	25
					SELF-SEALING											
					ATTACHING PARTS											
			5305-180-0010	AN525-10R8 <88044>	.SCREW,MACHINE.....		HD		6	*	*	*		*	181	26
			5310-877-5797	MS21044N3 <96906>	.NUT,SELF-LOCKING,HEXAGON....		EA		6	*	*	*		*	181	
					---*---											
P	O		4730-613-9751	155S4-6D <00624>	..COUPLING,HALF,SELF-SEALING.		EA		1	*	*	*		REF	181	27
X1				C155-25-12 <00624>	...NUT,COUPLING,SELF-SEALING.		EA		2						181	28
P	O		4730-958-8194	1-160-317-01 <91547>	..BOLT,FLUID PASSAGE.....		EA		1	*	*	*	REF	REF	181	29
P	O	R	1650-289-8605	67WB200-3 <90166>	.PUMP,AXIAL PISTONS RPLS--..		EA		1	REF	REF	REF	REF	REF	181	30
					1650-203-9958,											
					1650-204-1688											
					ATTACHING PARTS											
			5310-167-0820	AN960-516 <88044>	.WASHER,FLAT.....		HD		4	*	*	*		*	181	31
			5310-088-0553	MS21044N5 <96906>	.NUT,SELF-LOCKING,HEXAGON....		HD		4	*	*	*		*	181	
					---*---											
			5330-599-5989	AN4044-1 <88044>	.GASKET,FLANGE.....		EA		1	REF	REF	REF		*	181	32
		R	1650-204-1688	67WB200 <90166>	PUMP,AXIAL PISTON SEE FIG...		EA		1						181A	
					32 & 181 FOR NHA											
		R	1650-203-9958	67WB200-1 <90166>	PUMP AXIAL,PISTON SEE FIG...		EA		1						181A	
					32 & 181 FOR NHA											
P	O	R	1650-289-8605	67WB200-3 <90166>	PUMP AXIAL,PISTON SEE FIG...		EA		1	REF	REF	REF	REF	*	181A	
					32 & 181 FOR NHA											
				P1000-12 <90166>	.PLUG INLET,SHIPPING...NOTE 4		EA		1						181A	1
				P1001-12 <90166>	.GASKET,SHIPPING PLUG..NOTE 4		EA		1						181A	2
				P1000-10 <90166>	.PLUG OUTLET,SHIPPING..NOTE 4		EA		1						181A	3
				P1001-10 <90166>	.GASKET.....NOTE 4		EA		1						181A	4
				P1000-6 <90166>	.PLUG BYPASS,SHIPPING..NOTE 4		EA		1						181A	5
				P1001-6 <90166>	.GASKET SHIPPING,PLUG..NOTE 4		EA		1						181A	6
				P402 <90166>	.PROTECTOR,SHAFT.....NOTE 5		EA		1						181A	7
				P390 <43491>	.FASTENER,PROTECTOR,SHAFT....		EA		2						181A	8

(1) SOURCE, MAINT AND REC CODE (a) SOURCE CODE	(b) MAINT LEVEL	(c) REC CODE	(2) FEDERAL STOCK NUMBER	REFERENCE NUMBER	(3) DESCRIPTION	MODELS USABLE ON CH-34C	(4) UNIT OF ISSUE	(5) QTY INC IN UNIT PACK	(6) QTY INC IN UNIT	(7) 30-DAY DS/GS MAINT ALW (a) 1-20	(b) 21-50	(c) 51-100	(8) 1-YR ALW PER 100 EQUIP CNTGCY	(9) DEPOT MAINT ALW PER 100 EQUIP	(10) ILLUSTRATION (a) FIG NO	(b) ITEM NO
					CONTINUED										181A	8
					NOTE 5											
				P142 <90166>	.NAMEPLATE.....NOTE 4		EA		1						181A	9
				1686 <90166>	.NAMEPLATE.....NOTE 2		EA		1						181A	
					NOTE 3											
					NOTE 5											
					ATTACHING PARTS											
			5305-253-5606	MS21318-7 <96906>	.SCREW,DRIVE.....NOTE 5		HD		4	*	*	*		*	181A	10
					---*---											
				67A370 <90166>	.RETAINER,COUPLING.....NOTE 5		EA		1						181A	11
P	H		1650-719-7688	3979 <90166>	.COUPLING,DRIVE.....		EA		1	*	*	*		*	181A	12
P	H		1650-328-3442	67A425 <90166>	.SEAL HYDRAULIC,PUMP.....		EA		1	*	*	*		*	181A	13
					ATTACHING PARTS											
				P148 <70276>	.SCREW.....NOTE 4		EA		6						181A	14
					---*---											
P	H		1650-322-5205	67A372 <90166>	..RETAINER,RING.....NOTE 1		EA		1	*	*	*		*	181A	15
					NOTE 2											
P	H		1650-704-8551	67B1003-7 <90166>	.SPRING,SEAL.....NOTE 3		EA		1	*	*	*		*	181A	
					NOTE 5											
P	H		5340-595-6171	67A1183-4 <90166>	.SPACER,RING.....NOTE 3		EA		1	*	*	*		*	181A	
			5330-584-1038	MS28775-213 <96906>	..PACKING,PREFORMED....NOTE 1		EA		1	REF	REF	REF		*	181A	17
					NOTE 2											
			5330-579-3163	MS28775-214 <96906>	..PACKING,PREFORMED....NOTE 3		EA		1	*	*	*		*	181A	
					NOTE 4											
P	H		5310-596-0335	67A409 <90166>	..WASHER,SPRING TENSION.....		EA		2	*	*	*		*	181A	18
					NOTE 1											
					NOTE 2											
P	H		1650-322-5184	67A1004-4 <90166>	.RING,SEAL.....NOTE 3		EA		1	*	*	2		*	181A	
P	H		5310-209-2062	67A371 <43491>	..WASHER,NONMETALLIC...NOTE 1		EA		2	*	*	*		*	181A	19
					NOTE 2											
P	H		1650-322-5194	67A1005-4 <90166>	.RING.....NOTE 3		EA		1	*	2	2		*	181A	
P	H		5330-292-0436	67A395 <43491>	..WASHER,FELT.....NOTE 1		EA		1	*	*	*		*	181A	20
					NOTE 2											
			5330-559-6182	MS28775-211 <96906>	.PACKING,PREFORMED.....NOTE 3		EA		1	*	*	*		*	181A	
					NOTE 4											
P	H		1650-600-2131	67B1006-8 <90166>	.PLATE,SEAL.....NOTE 3		EA		2	*	*	*		*	181A	
				P646 <90166>	.GASKET,SPECIAL.....NOTE 4		EA		1						181A	22
P	H		5310-793-6832	67A1068 <90166>	.NUT ASSEMBLY,CAP.....		EA		1	*	*	*		*	181A	23
			5330-684-3419	MS28775-016 <96906>	.PACKING,PREFORMED.....NOTE 1		EA		1	*	*	*		*	181A	24
			5330-579-3156	MS28775-116 <96906>	.PACKING,PREFORMED.....NOTE 2		EA		1	*	*	*		*	181A	
					NOTE 3											
					NOTE 4											
P	H		1650-095-4146	67A388 <90166>	.SLEEVE,ADJUSTING,PUMP.....		EA		1	*	*	*		*	181A	25
P	H		5305-033-2189	67A386 <90166>	.SCREW,ADJUSTING.....		EA		1	*	*	*		*	181A	26
			5330-584-0266	MS28775-010 <96906>	.PACKING,PREFORMED.....		EA		1	*	*	*		*	181A	27
					NOTE 1,2,3 & 4											
P	H		1650-621-0573	1818-15 <90166>	.SPRING ASSEMBLY,COMPENSATOR.		EA		1	*	*	*		*	181A	28
P	H		5310-819-0519	P1031 <56878>	..NUT.....		EA		1	*	*	*		*	181A	29
X1				1584-6 <90166>	..RING,RETAINING.....NOTE 2		EA		1						181A	
					NOTE 3											
X1				67A1060 <90166>	..SEAT,COMPENSATOR SPRING....		EA		1						181A	30
P	H		1650-340-0896	67A1116 <90166>	..SPRING,COMPENSATOR.....		EA		2	*	*	*		*	181A	31

(1) SOURCE, MAINT AND REC CODE (a) SOURCE CODE	(b) MAINT LEVEL	(c) REC CODE	(2) FEDERAL STOCK NUMBER	REFERENCE NUMBER		(3) DESCRIPTION	MODELS USABLE ON CH-34C	(4) UNIT OF ISSUE	(5) QTY INC IN UNIT PACK	(6) QTY INC IN UNIT	(7) 30-DAY DS/GS MAINT ALW (a) 1-20	(b) 21-50	(c) 51-100	(8) 1-YR ALW PER 100 EQUIP CNTGCY	(9) DEPOT MAINT ALW PER 100 EQUIP	(10) ILLUSTRATION (a) FIG NO	(b) ITEM NO
X1				67A1059	<90166>	..GUIDE COMPENSATOR SPRING...		EA		1						181A	32
P	H		1650-340-0893	67A1058	<90166>	..SEAT,COMPENSATOR.....NOTE 1		EA		1	*	*	*		*	181A	33
				1824	<90166>	..SEAT,COMPENSATOR.....NOTE 2		EA		1						181A	
						NOTE 3											
P	H		5305-693-7480	67A1057	<90166>	..SCREW,EXTERNAL,RELIEVE.....		EA		1	*	*	*		*	181A	34
						NOTE 1											
				1823-6	<90166>	..ROD,CONNECTING.....NOTE 3		EA		1						181A	
				1823-4	<90166>	..ROD,CONNECTING.....NOTE 2		EA		1						181A	
X2	H		1650-397-5924	67A422	<90166>	.HOUSING ASSEMBLY.....		EA		1	*	*	*		*	181A	35
P	H		1650-673-6998	67B401	<90166>	.WASHER,THRUST.....		EA		1	*	*	*		*	181A	36
						ATTACHING PARTS											
				P729	<70276>	.SCREW.....NOTE 5		EA		10						181A	37
			5310-262-4868	65A58	<90166>	.WASHER,FLAT.....NOTE 5		EA		10	*	*	*		*	181A	38
						---*---											
P	H		1650-166-5929	67A39	<90166>	.PLATE,HYDRAULIC PUMP.....		EA		1	*	*	*		*	181A	39
P	H		1650-166-5921	67A40	<90166>	.BEARING,SLEEVE.....		EA		1	*	*	*		*	181A	40
P	H		1650-601-5607	2588	<90166>	.SHAFT ASSEMBLY,PUMP...NOTE 1		EA		1	*	*	2		*	181A	41
						NOTE 2											
P	H		1650-601-5607	2588	<90166>	.SHAFT ASSEMBLY,PUMP...NOTE 3		EA		1	*	*	REF		*	181A	
P	H		1650-166-5931	67A7	<90166>	.PLATE,REAR.....		EA		1	*	*	*		*	181A	42
P	H		1650-348-2020	67A420	<90166>	.PISTON ASSEMBLY,PUMP.....		EA		9	*	*	*		*	181A	43
				67A10	<90166>	..HEAD,PISTON.....NOTE 5		EA		9						181A	44
X1				67A399	<90166>	..PISTON,PUMP.....		EA		9						181A	45
				67A358	<90166>	.SPRING,HELICAL.....NOTE 5		EA		9						181A	46
P	H		1650-333-8084	67A397	<90166>	.BEARING,SLEEVE.....		EA		9	2	3	6		*	181A	47
P	H		1650-347-1490	67B416	<90166>	.CYLINDER BLOCK UNIT.....		EA		1	*	*	*		*	181A	48
			5305-297-2962	67A641	<43491>	..SETSCREW.....NOTE 5		EA		1	*	*	*			181A	49
P	H		5310-209-0197	67A1387	<90166>	..WASHER,RETAINING.....NOTE 5		EA		1	*	*	*		*	181A	50
				67A640	<90166>	..SCREEN,FILTER.....NOTE 5		EA		1						181A	51
P	H		1650-662-7106	67A639	<90166>	..BUSHING,SLEEVE.....NOTE 5		EA		1	*	*	*		*	181A	52
				P893	<43491>	..RESTRICTOR,FLUID FLOWNOTE 5		EA		1						181A	53
				67A638	<90166>	..SEAT,ORIFICE.....NOTE 5		EA		1						181A	54
				67A419	<90166>	..BEARING ASSEMBLY.....		EA		1						181A	55
				67A398	<90166>	..BEARING,SLEEVE.....NOTE 5		EA		1						181A	56
X1				67C411	<90166>	..BLOCK,CYLINDER.....		EA		1						181A	58
				P1030	<90166>	..NUT,SELF-LOCKING.....NOTE 5		EA		1						181A	59
P	H		1650-675-2669	67A377	<90166>	..SPIDER,PUMP.....		EA		1	*	*	*		*	181A	60
			5340-803-5469	MS16624-50	<96906>	..RING,RETAINING.....NOTE 5		EA		1	*	*	*		*	181A	61
P	H		1650-342-0495	67A396	<90166>	..BUSHING,SLEEVE.....NOTE 1		EA		1	*	*	*		*	181A	62
P	H		1650-332-6818	67A378	<90166>	..STEM,COMPENSATOR.....		EA		1	*	*	*		*	181A	63
			5330-584-0265	MS28775-012	<96906>	.PACKING,PREFORMED.....NOTE 4		EA		1	REF	REF	REF		*	181A	64
			5330-579-7918	MS28775-229	<96906>	.PACKING,PREFORMED.....NOTE 4		EA		2	*	*	*		*	181A	65
				P1052-8	<90166>	.WASHER,NONMETALLIC....NOTE 5		EA		1						181A	66
				67A393	<90166>	.DRAIN VALVE,FIRE HYDRANT....		EA		9						181A	67
						NOTE 5											
				67A1123	<90166>	.SPRING,HELICAL,COMPRESSION..		EA		9						181A	68
						NOTE 5											
P	H		5330-585-4623	PB1053-18	<90166>	.WASHER,NONMETALLIC....NOTE 4		EA		1	*	*	*		*	181A	69
			5330-579-8156	MS28775-212	<90166>	.PACKING,PREFORMED.....NOTE 4		EA		1	*	*	*		*	181A	70
P	H		1650-348-2023	67A526	<90166>	.COVER ASSEMBLY,PUMP.....		EA		1	*	*	*		*	181A	71
P	H		5315-291-2724	RA8169	<51663>	..PIN,STRAIGHT,HEADLESS.....		EA		1	*	*	*		*	181A	72
			4730-837-0856	MS2439LD4L	<96906>	.PLUG,MACHINE THREAD...NOTE 5		EA		4	*	*	*		*	181A	73

(1) SOURCE, MAINT AND REC CODE (a) SOURCE CODE	(b) MAINT LEVEL	(c) REC CODE	(2) FEDERAL STOCK NUMBER	(3) DESCRIPTION REFERENCE NUMBER			MODELS USABLE ON CH-34C	(4) UNIT OF ISSUE	(5) QTY INC IN UNIT PACK	(6) QTY INC IN UNIT	(7) 30-DAY DS/GS MAINT ALW (a) 1-20	(b) 21-50	(c) 51-100	(8) 1-YR ALW PER 100 EQUIP CNTGCY	(9) DEPOT MAINT ALW PER 100 EQUIP	(10) ILLUSTRATION (a) FIG NO	(b) ITEM NO
			5330-584-0265	MS28775-012	<96906>	.PACKING,PREFORMED.....NOTE 4		EA		4	REF	REF	REF		*	181A	
P	H		1650-717-2361	K46-1	<90166>	PARTS KIT,PUMP U/O..... 1650-204-1688,1650-203-9958 & 1650-298-8605 SEE FUNCTIONAL GROUP 50 FOR COMPONENTS		EA		1	2	3	5	65	*	181A	
P	H		1650-717-2362	K47-1	<90166>	PARTS KIT,PUMP OVERHAUL..... U/O 1650-204-1688, 1650-203-9958 & 1650-298-8605 SEE FUNCTIONAL GROUP 50 FOR COMPONENTS NOTE 1 U/O 1650-204-1688 NOTE 2 U/O 1650-203-9958 NOTE 3 U/O 1650-298-8605 NOTE 4 COMPONENT OF KIT 1650-717-2361 NOTE 5 COMPONENT OF KIT 1650-717-2362		EA		1	2	3	7	79	*	181A	

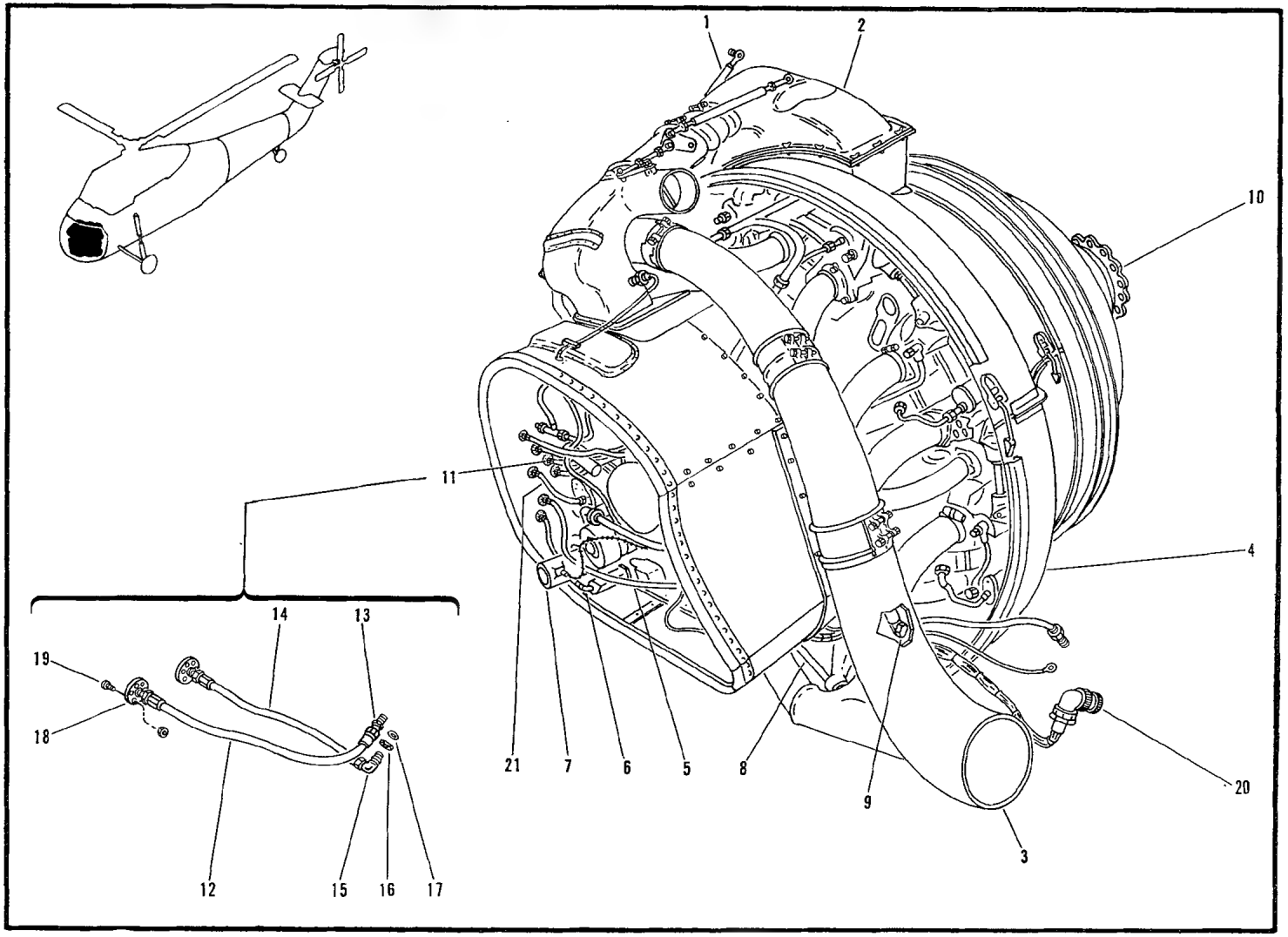

Figure 167. Demountable Power Package Assembly

Figure 168 Not Used In TM55-1520-202-35P

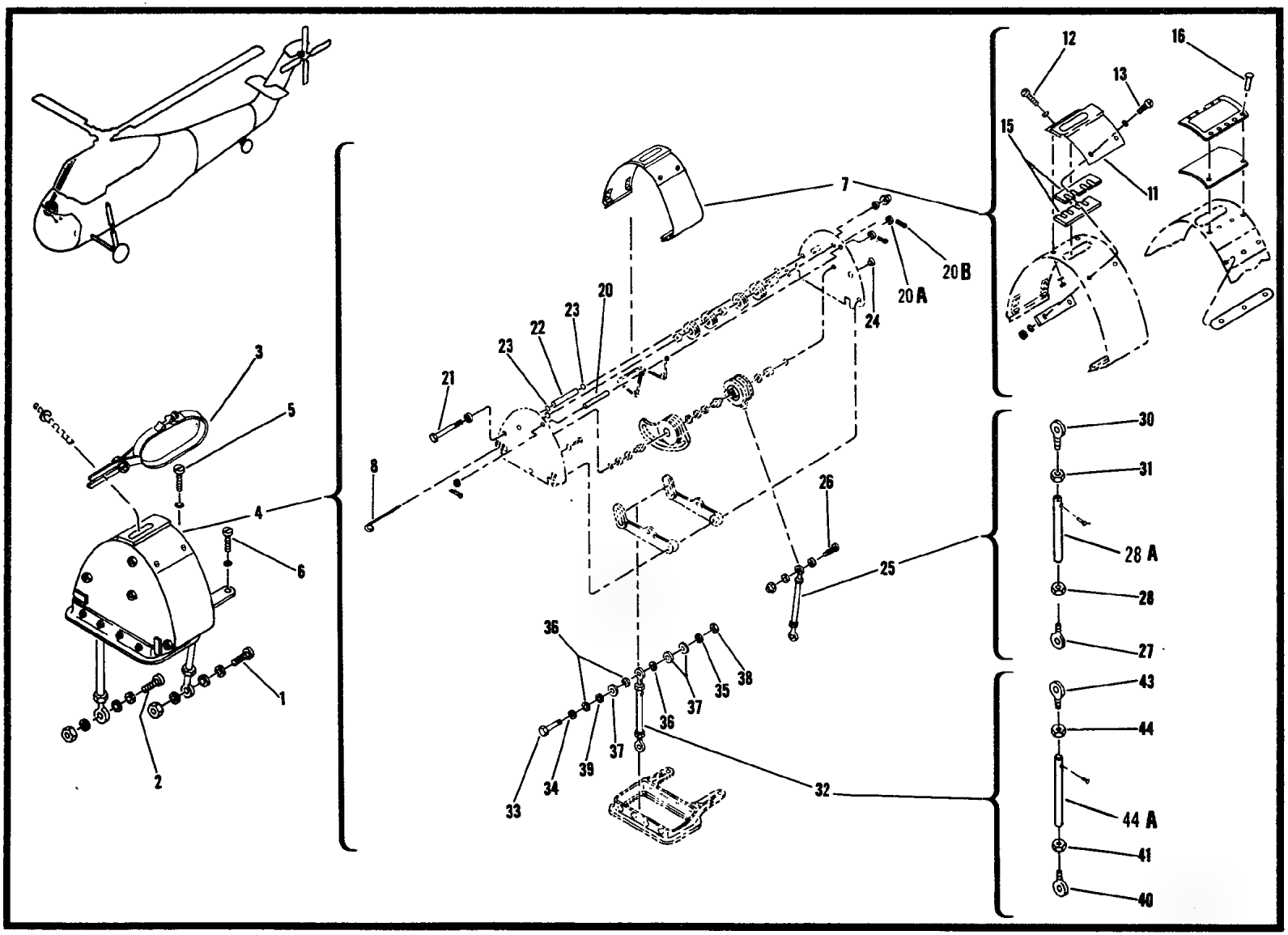

953 Figure 169. Demountable Power Package Controls Installation (Sheet 1 of 2)

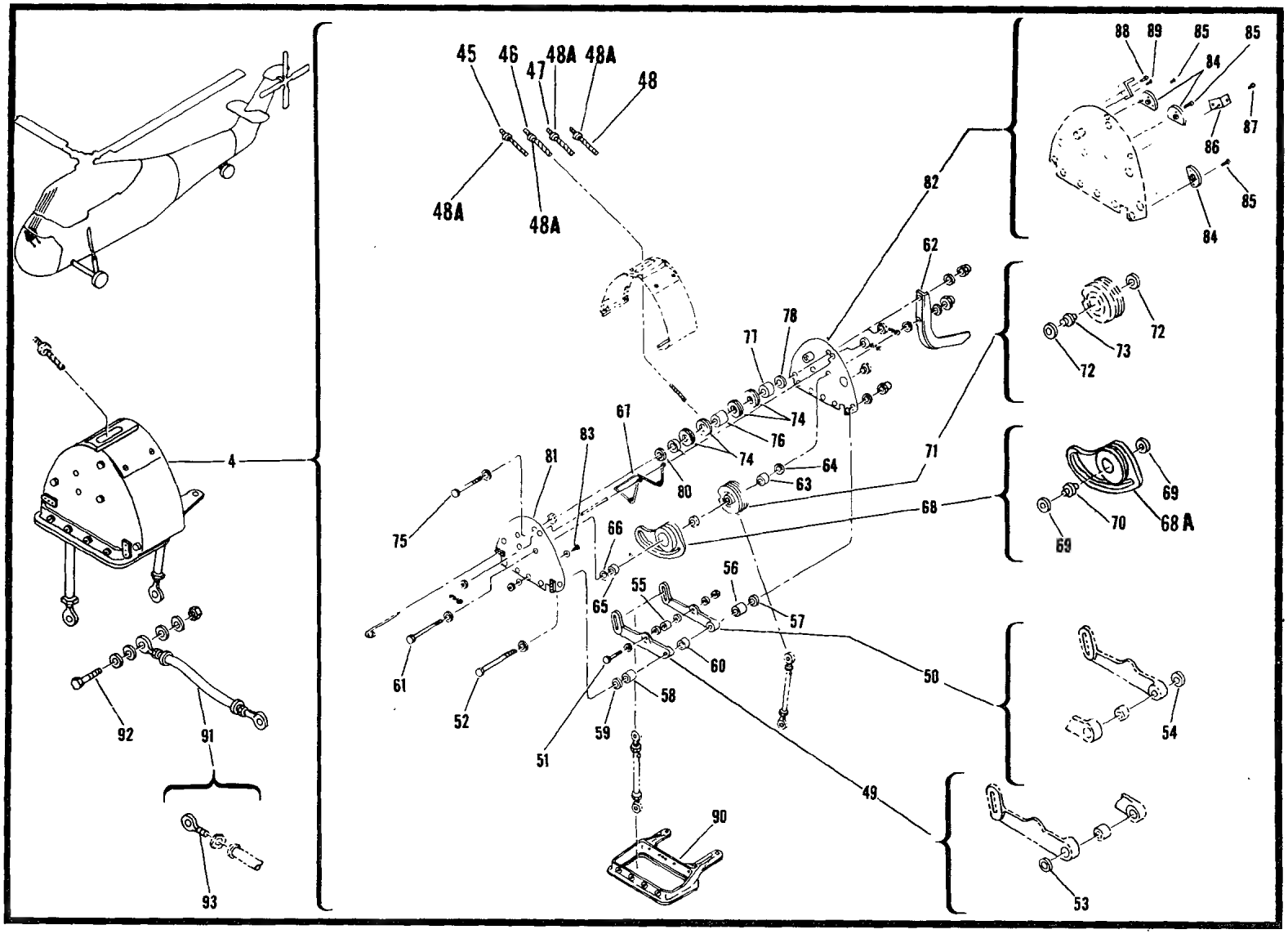

Figure 169. Demountable Power Package Controls Installation (Sheet 2 of 2)

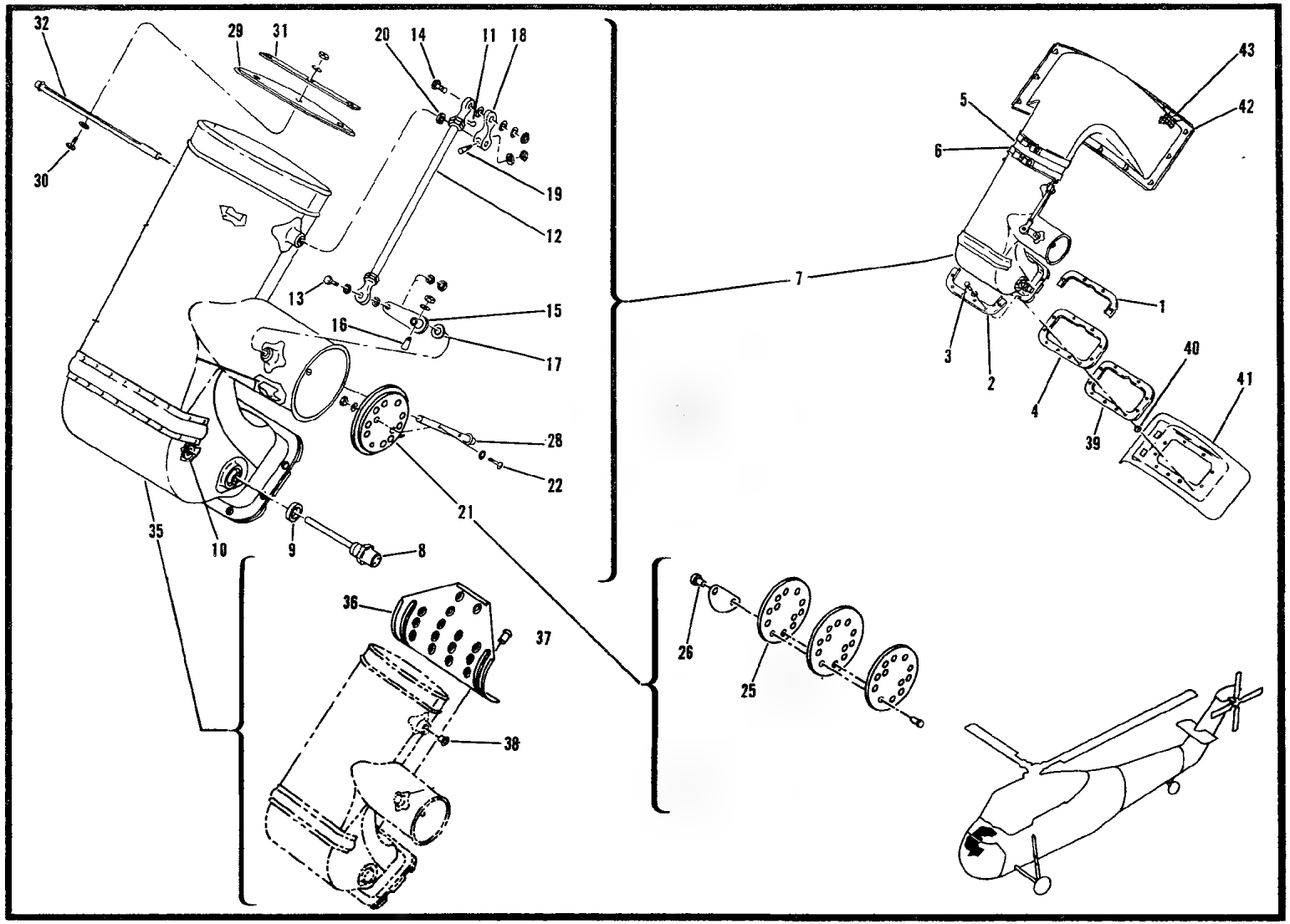

Figure 170. Induction System Installation
(USEL EFF 55-4462 & Subsequent)

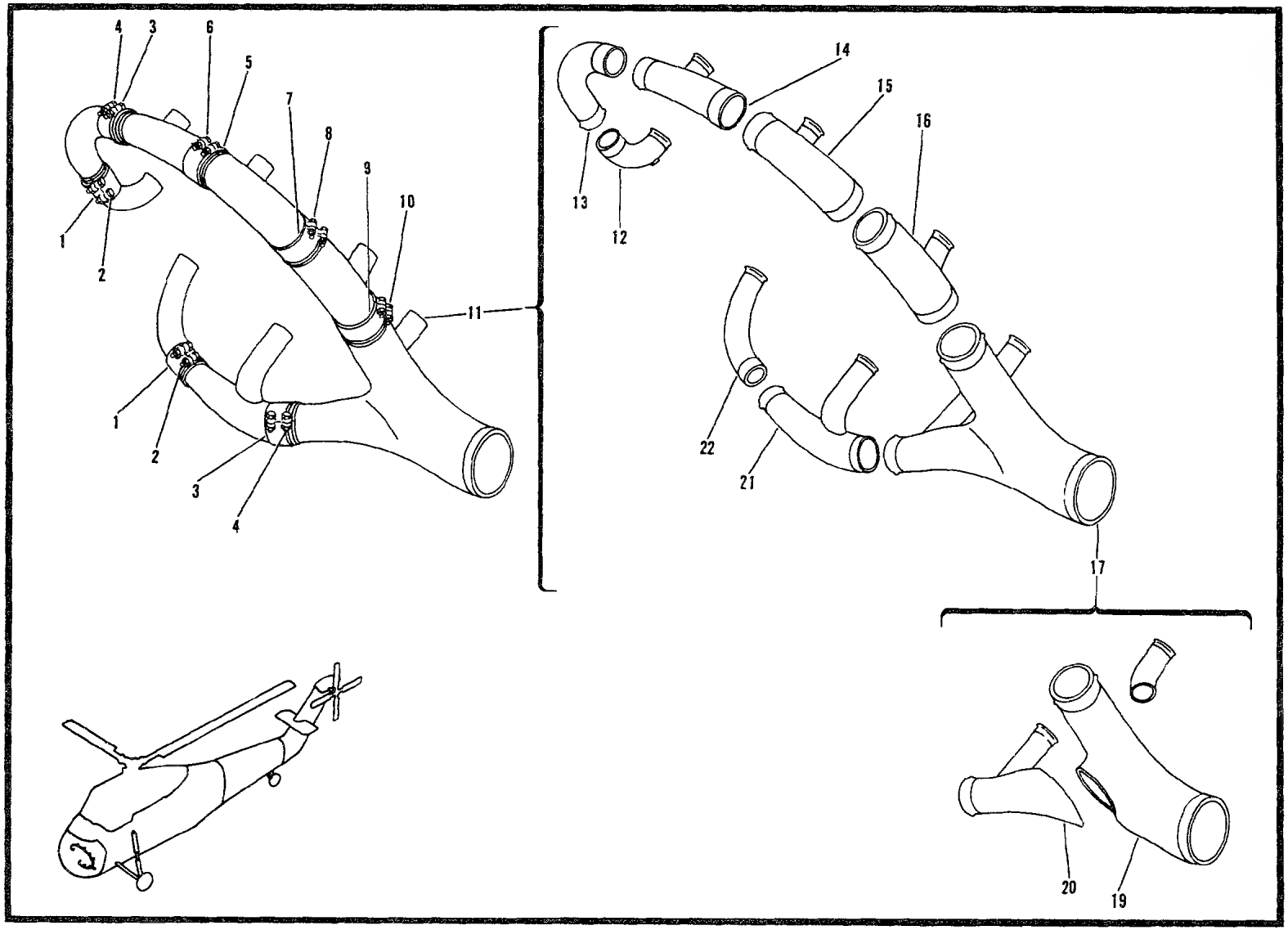

Figure 171. Collector Installation

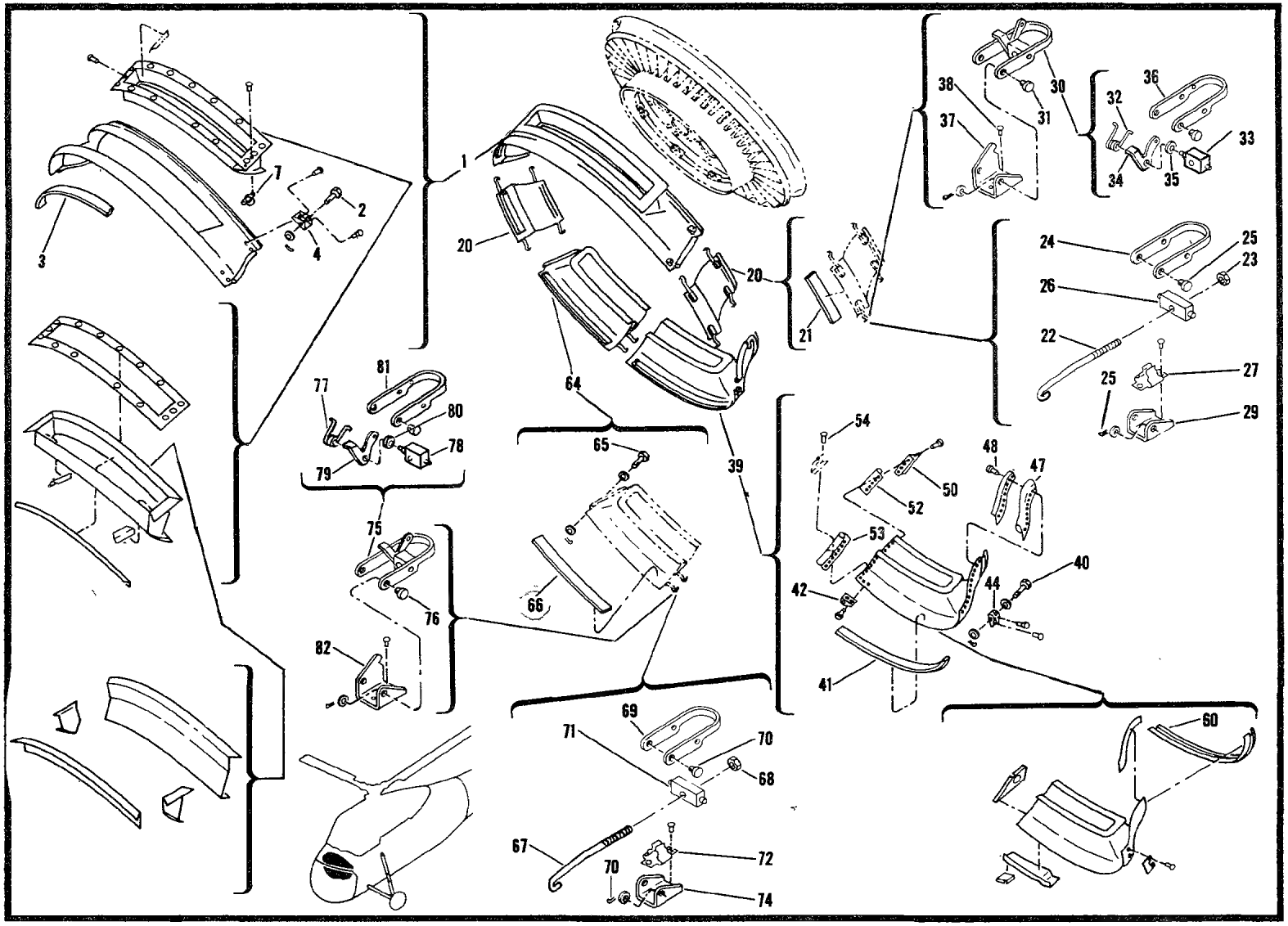

957

Figure 172. Cooling System Installation (Sheet 1 of 2)

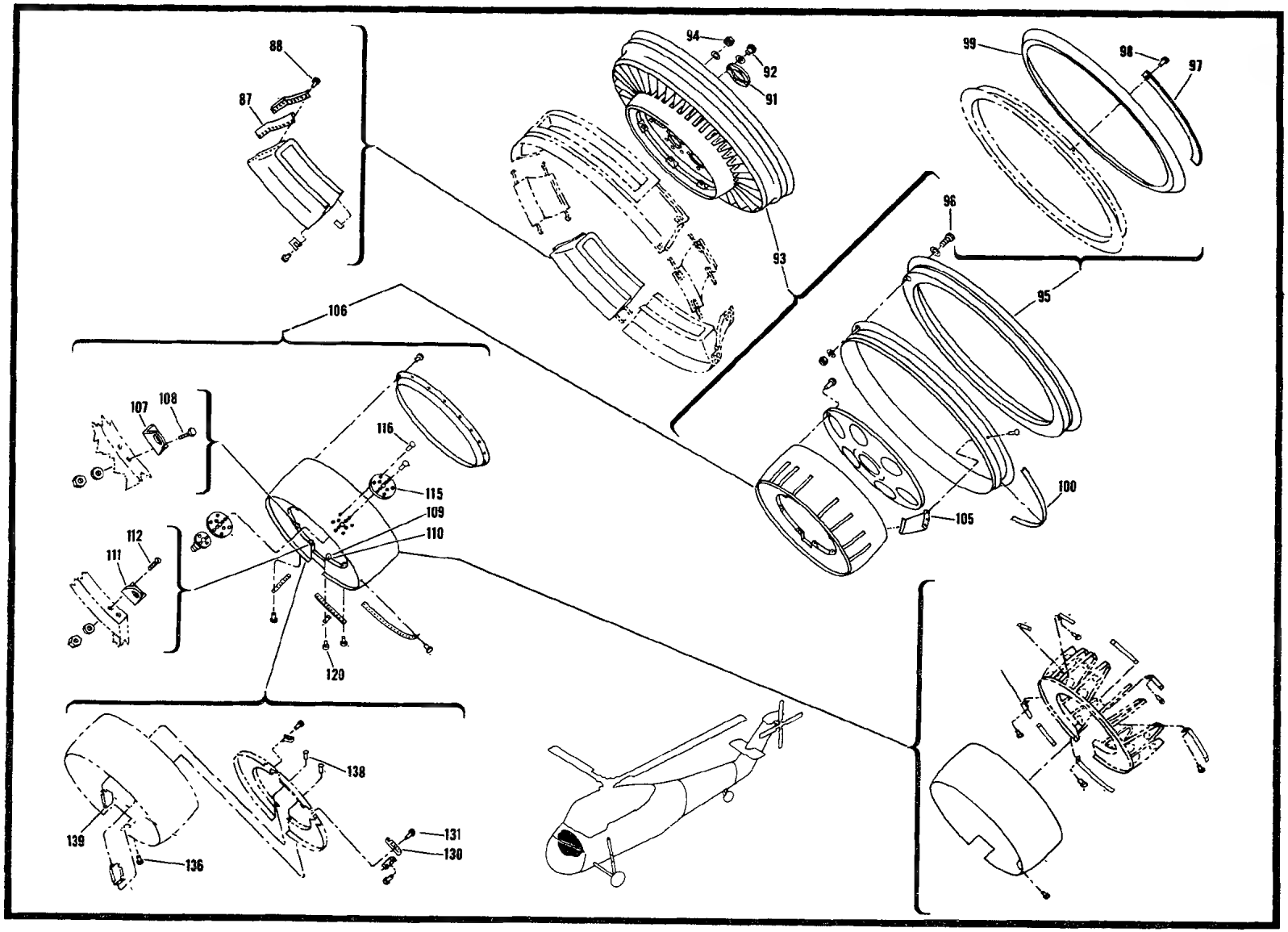

Figure 172. Cooling System Installation (Sheet 2 of 2)

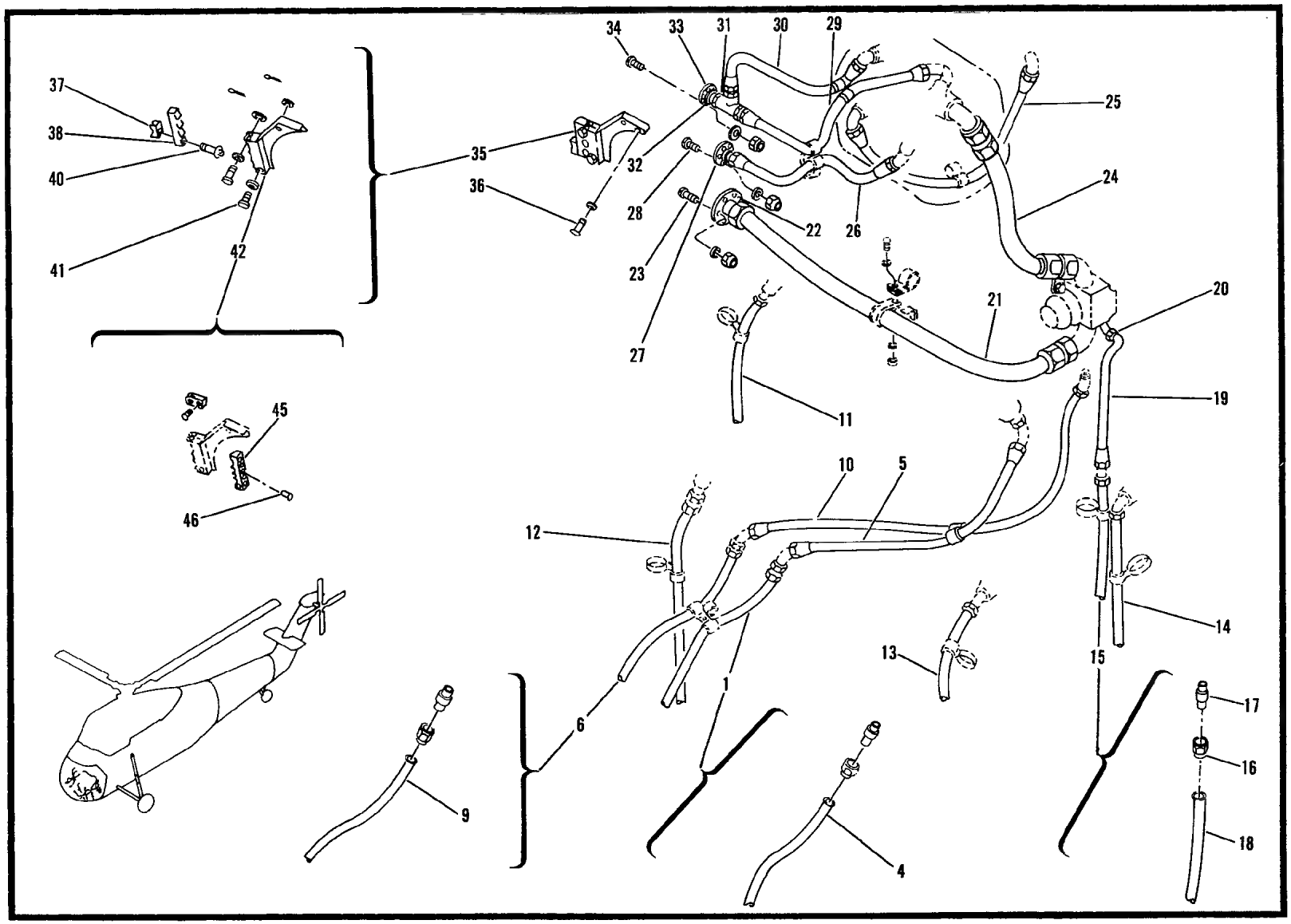

Figure 173. Fuel System Installation

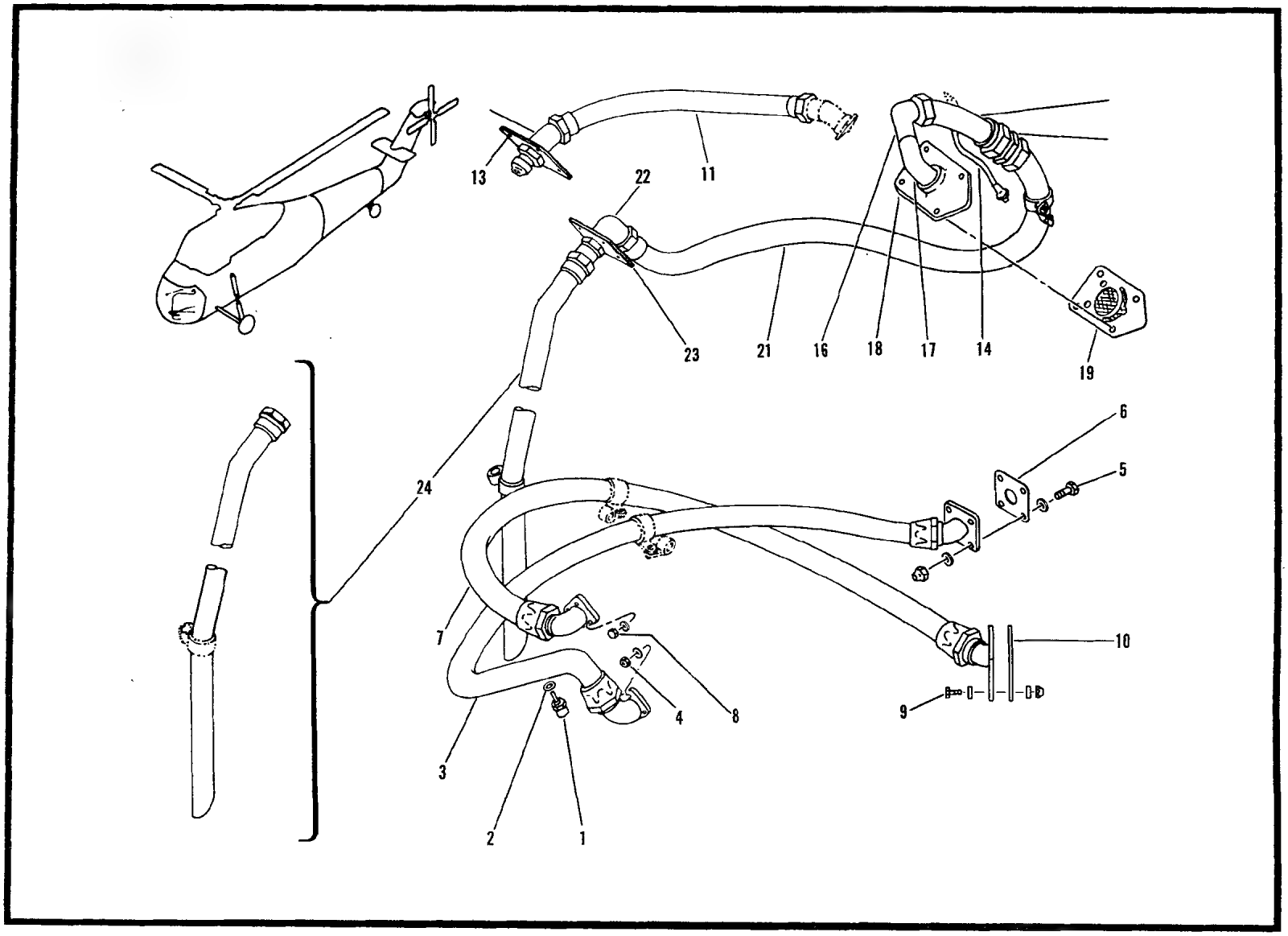

Figure 174 Lubrication System Installation

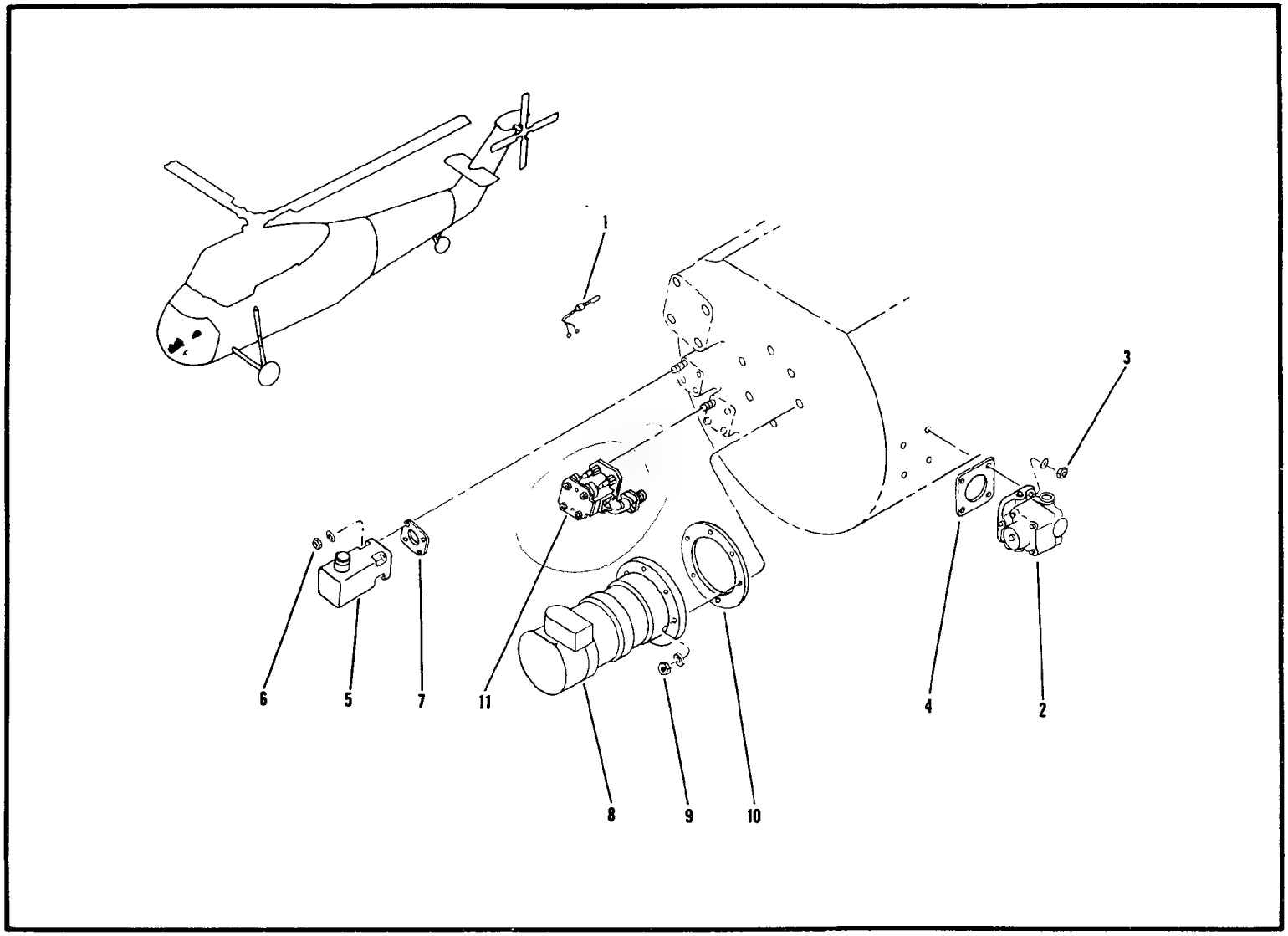

Figure 175. Engine Accessories Installation

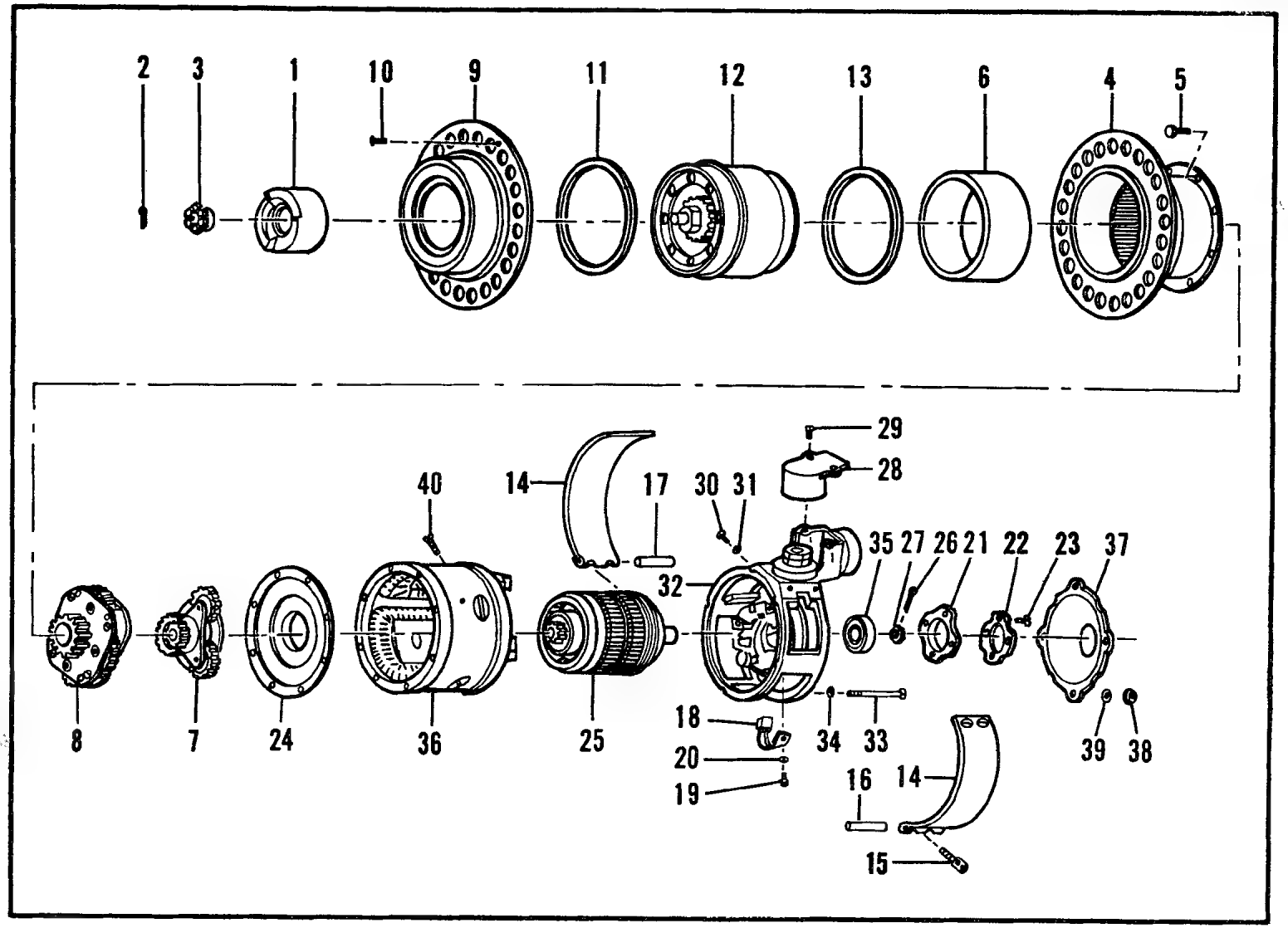

Figure 175A. Starter, Engine, Electrical (Sheet 1 of 7)

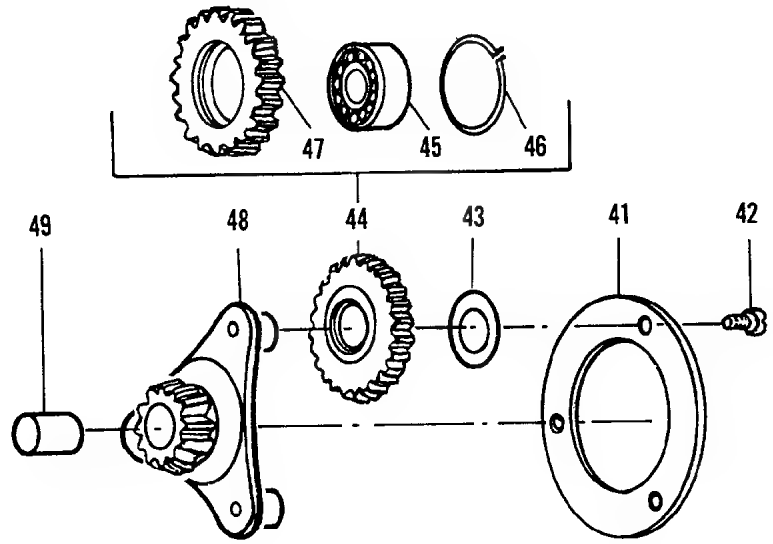

Figure 175A. Starter, Engine, Electrical (Spider Assembly, Starter) (Sheet 2 of 7)

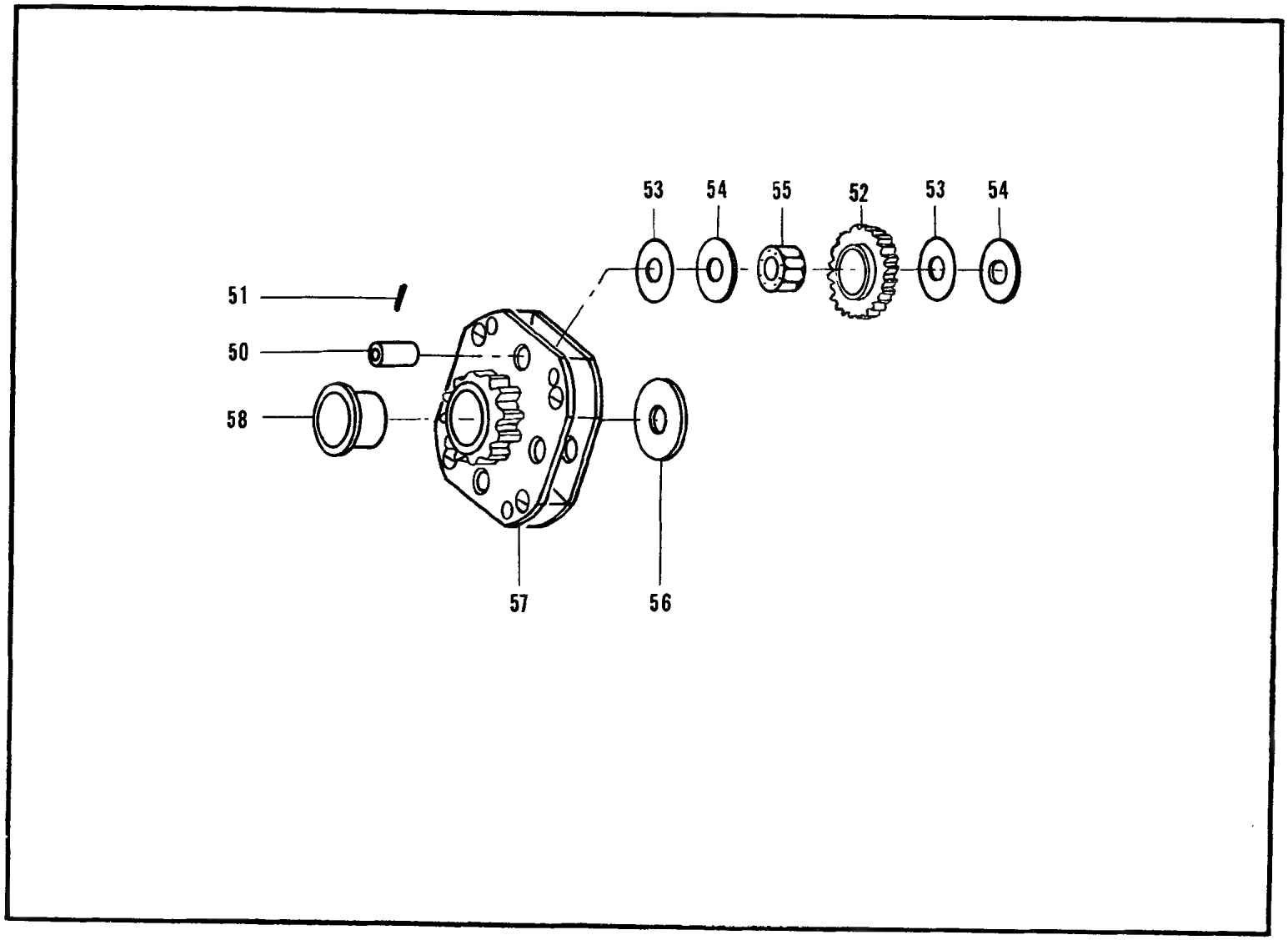

Figure 175A. Starter, Engine, Electrical (Spider, Planetary Starter) (Sheet 3 of 7)

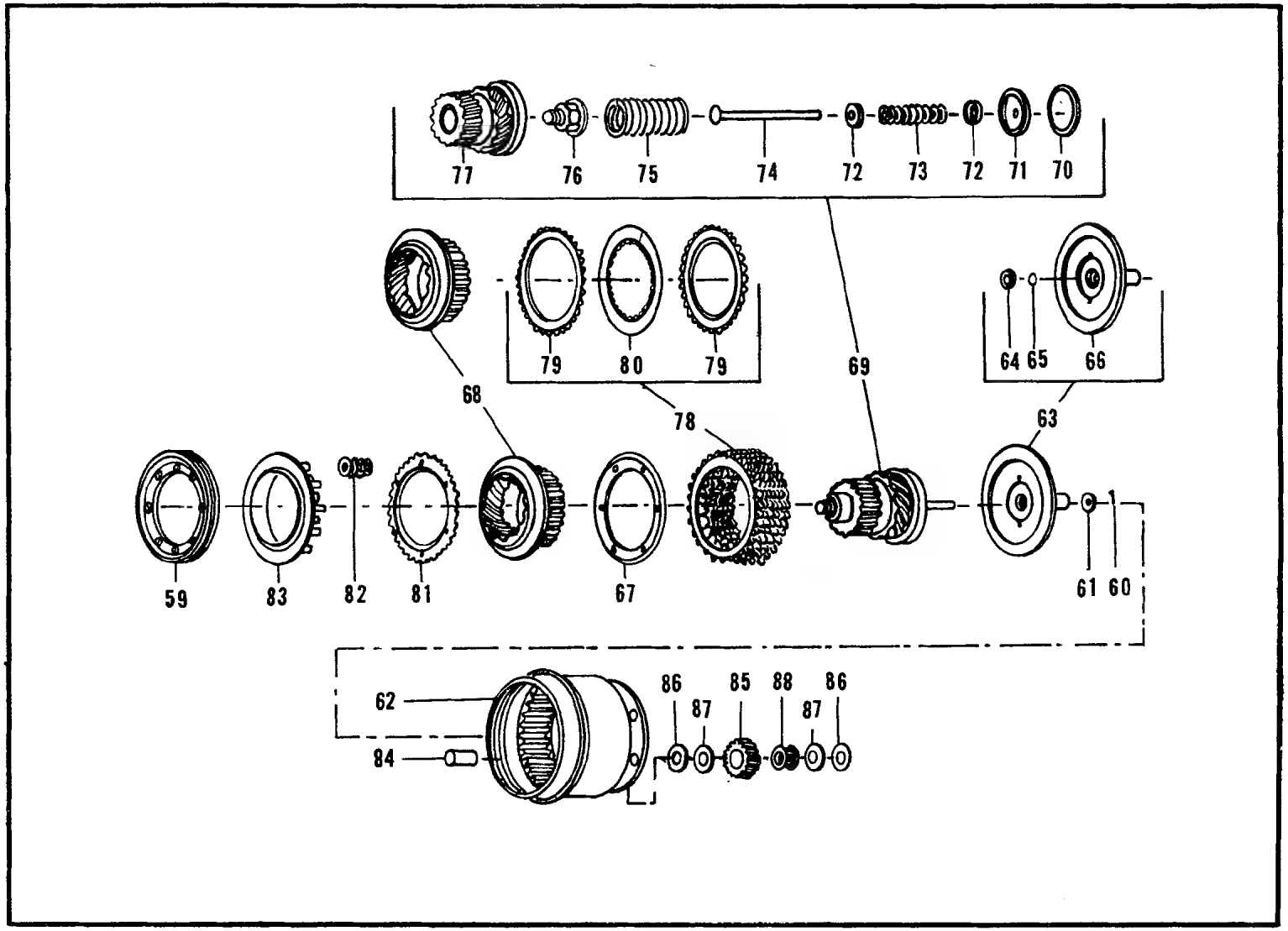

Figure 175A. Starter, Engine, Electrical (Barrel Assembly) (Sheet 4 of 7)

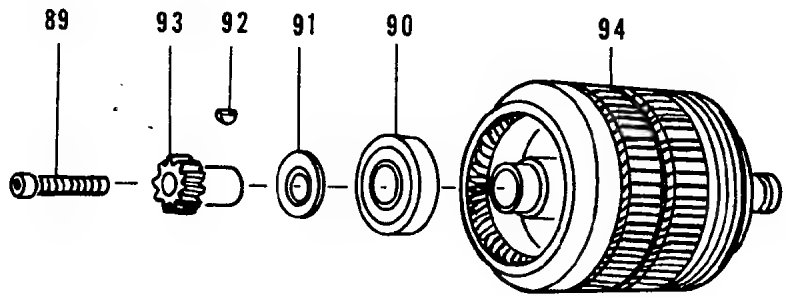

Figure 175A. Starter, Engine, Electrical (Armature and Pinion) (Sheet 5 of 7)

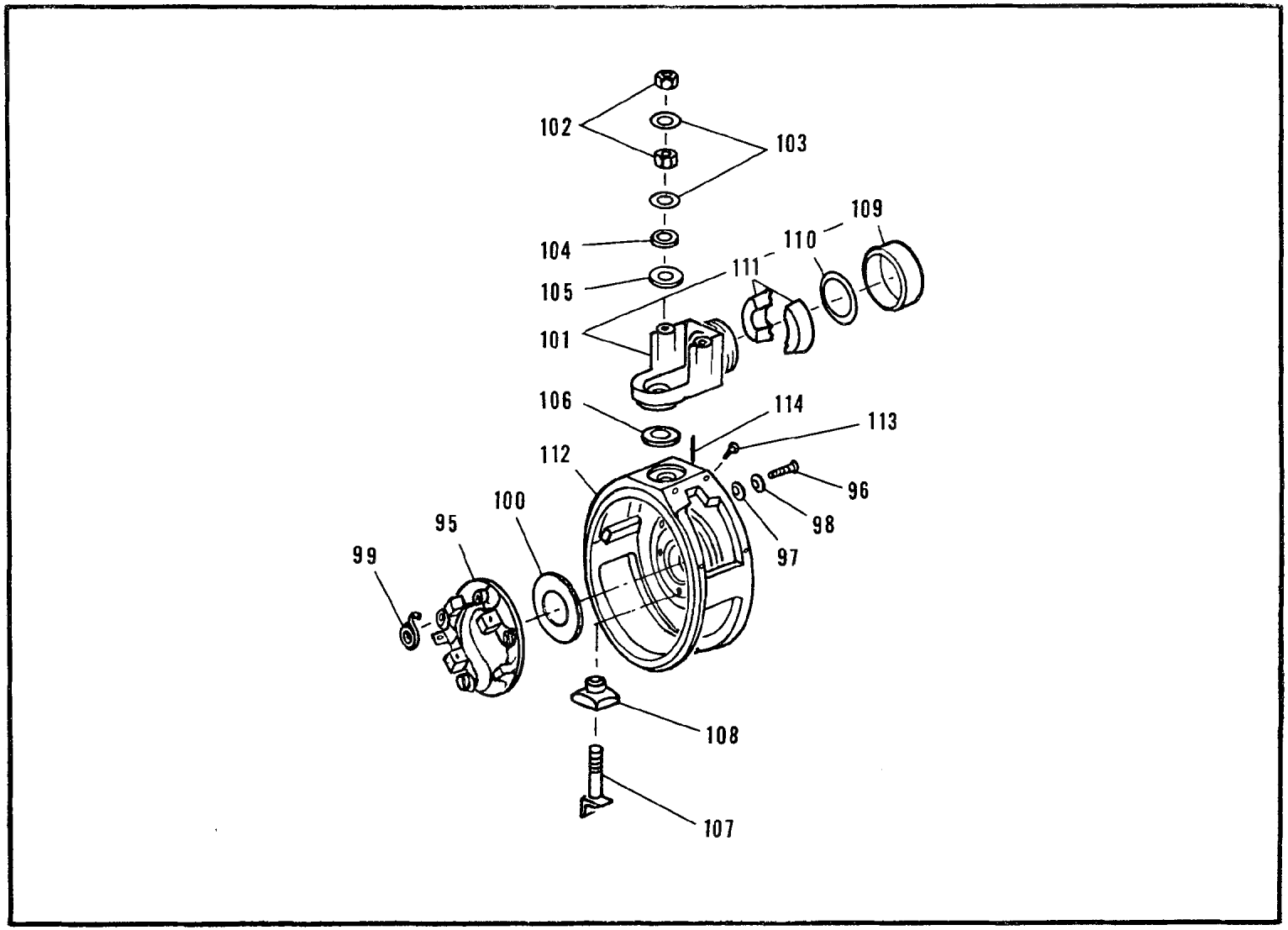

Figure 175A. Starter, Engine, Electrical (Back Head Assembly) (Sheet 6 of 7)

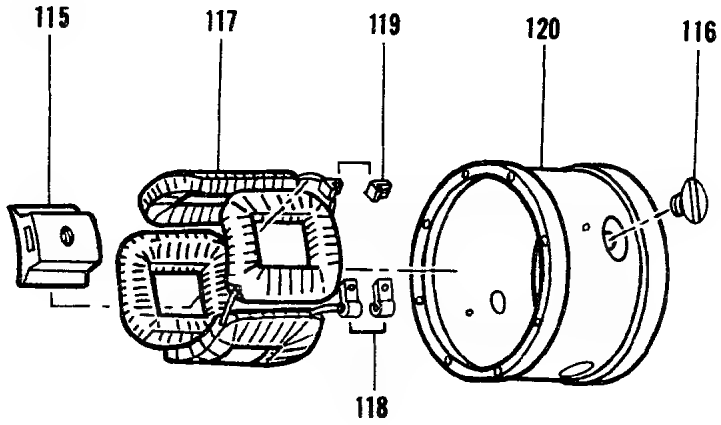

Figure 175A. Starter, Engine, Electrical (Starter, Engine Starter) (Sheet 7 of 7)

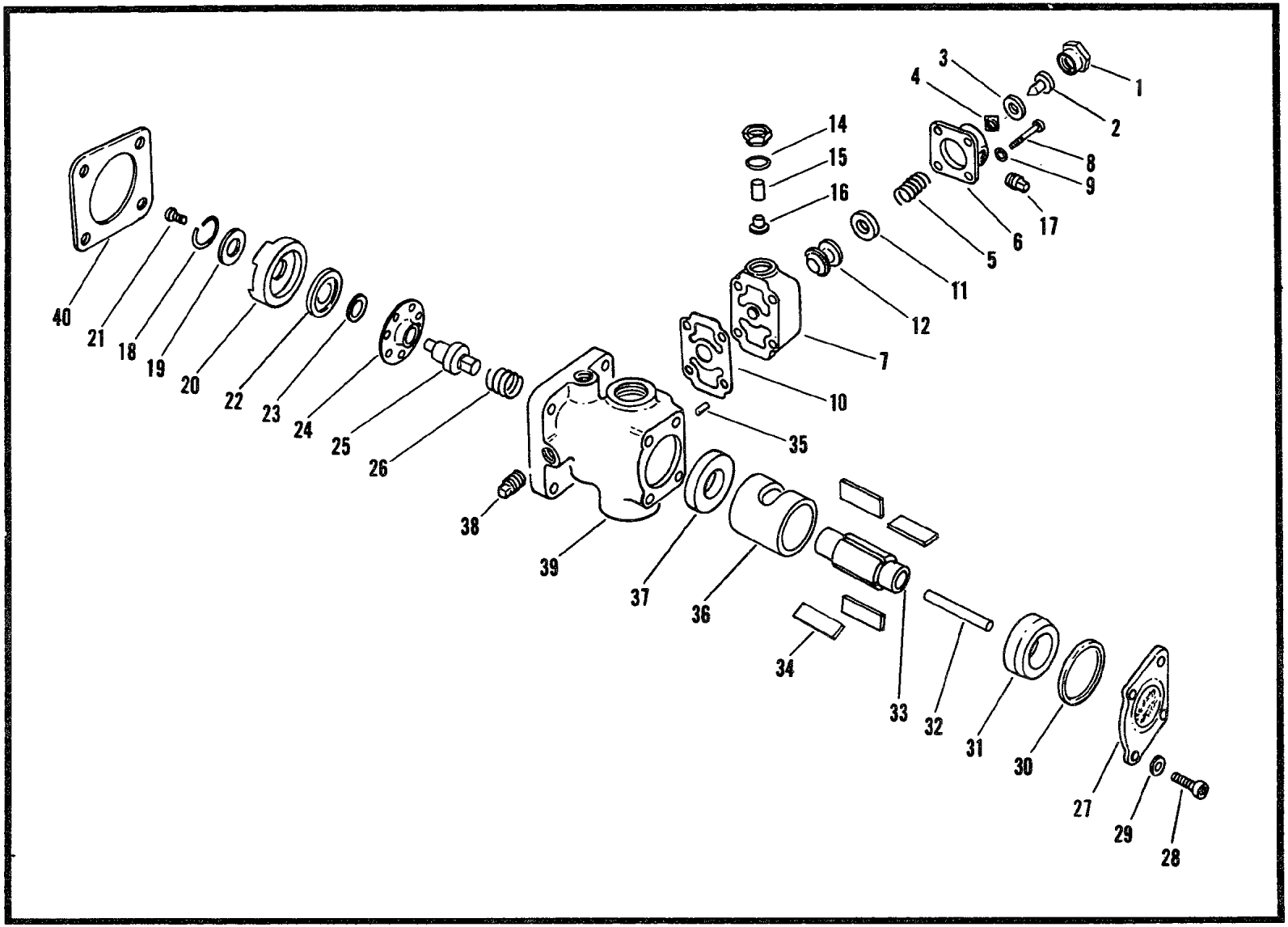

Figure 175B. Pump, Rotary, Power Driven

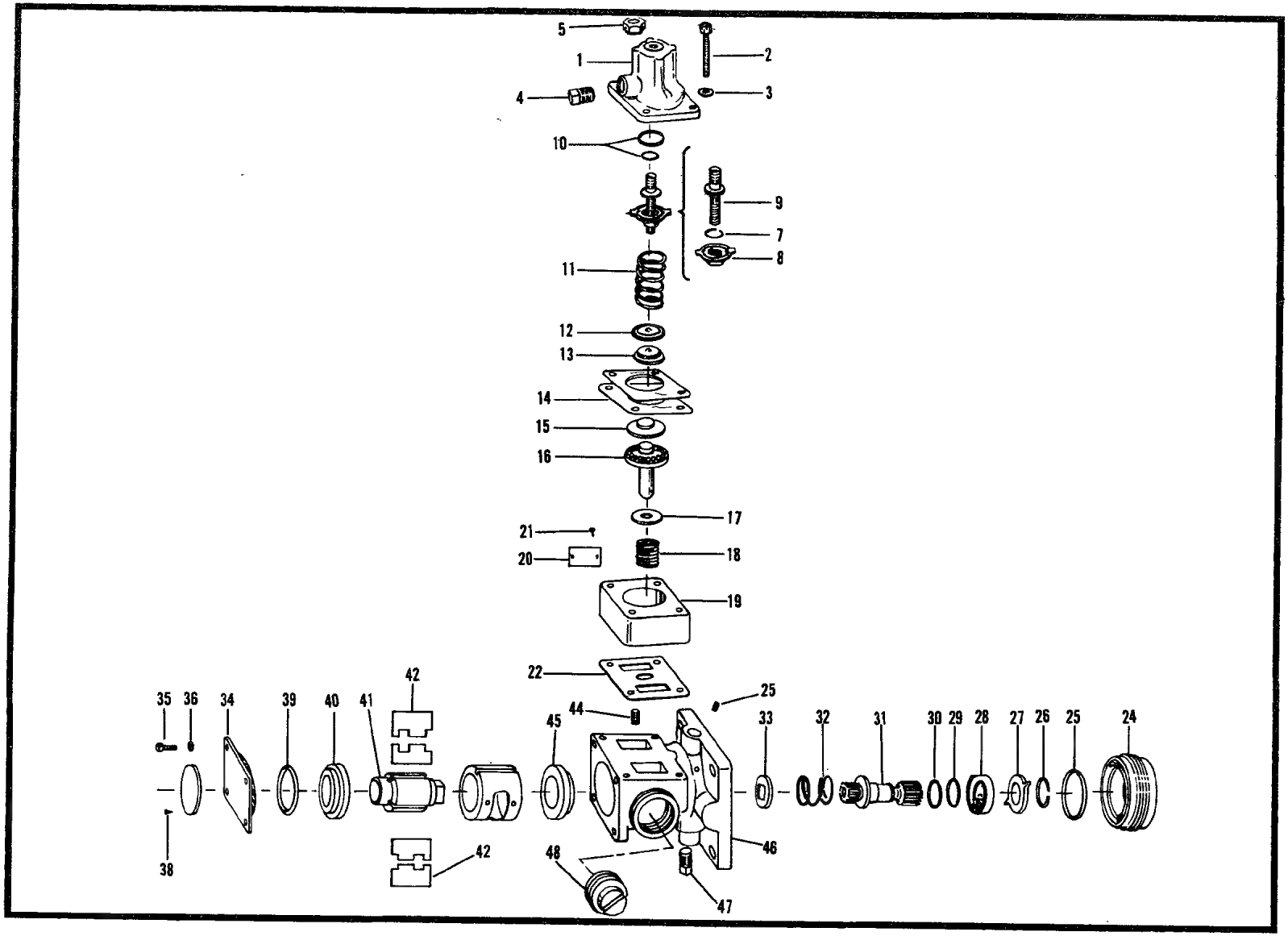

Figure 175C. Pump, Rotary, Power Driven

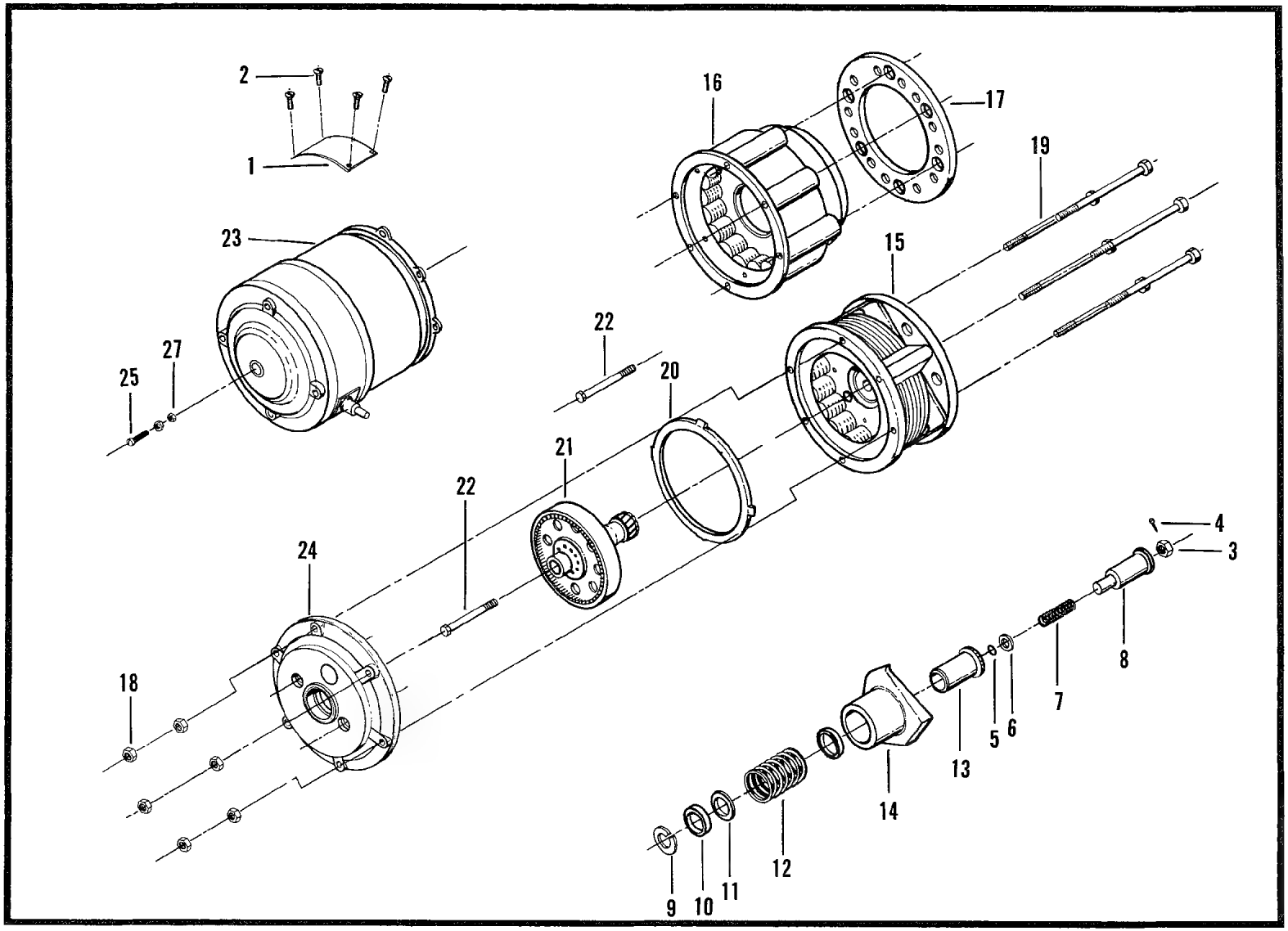

Figure 175D. Starter, Engine, Electrical (Sheet 1 of 4)

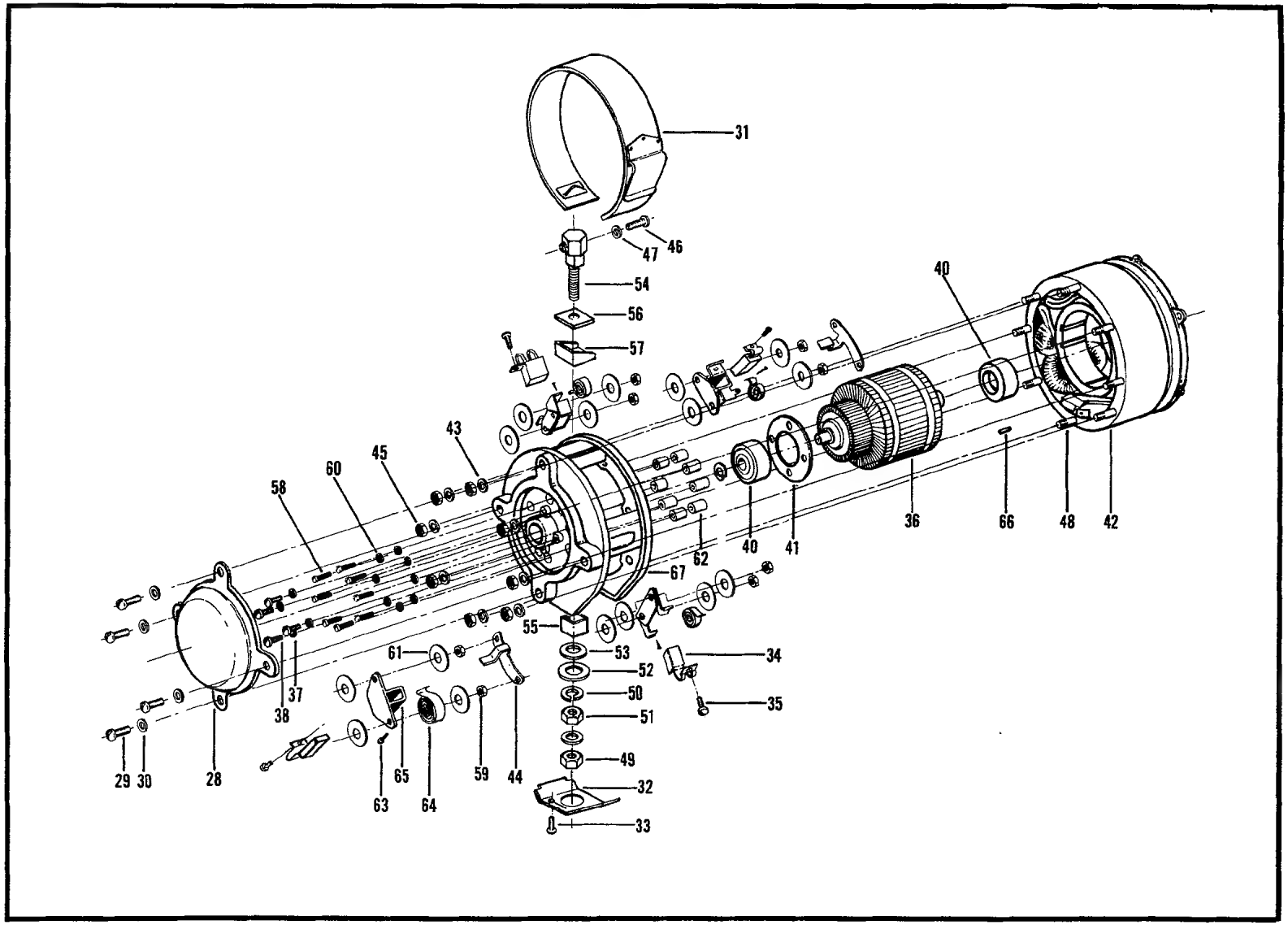

Figure 175D. Starter, Engine, Electrical (Motor Assembly) (Sheet 2 of 4)

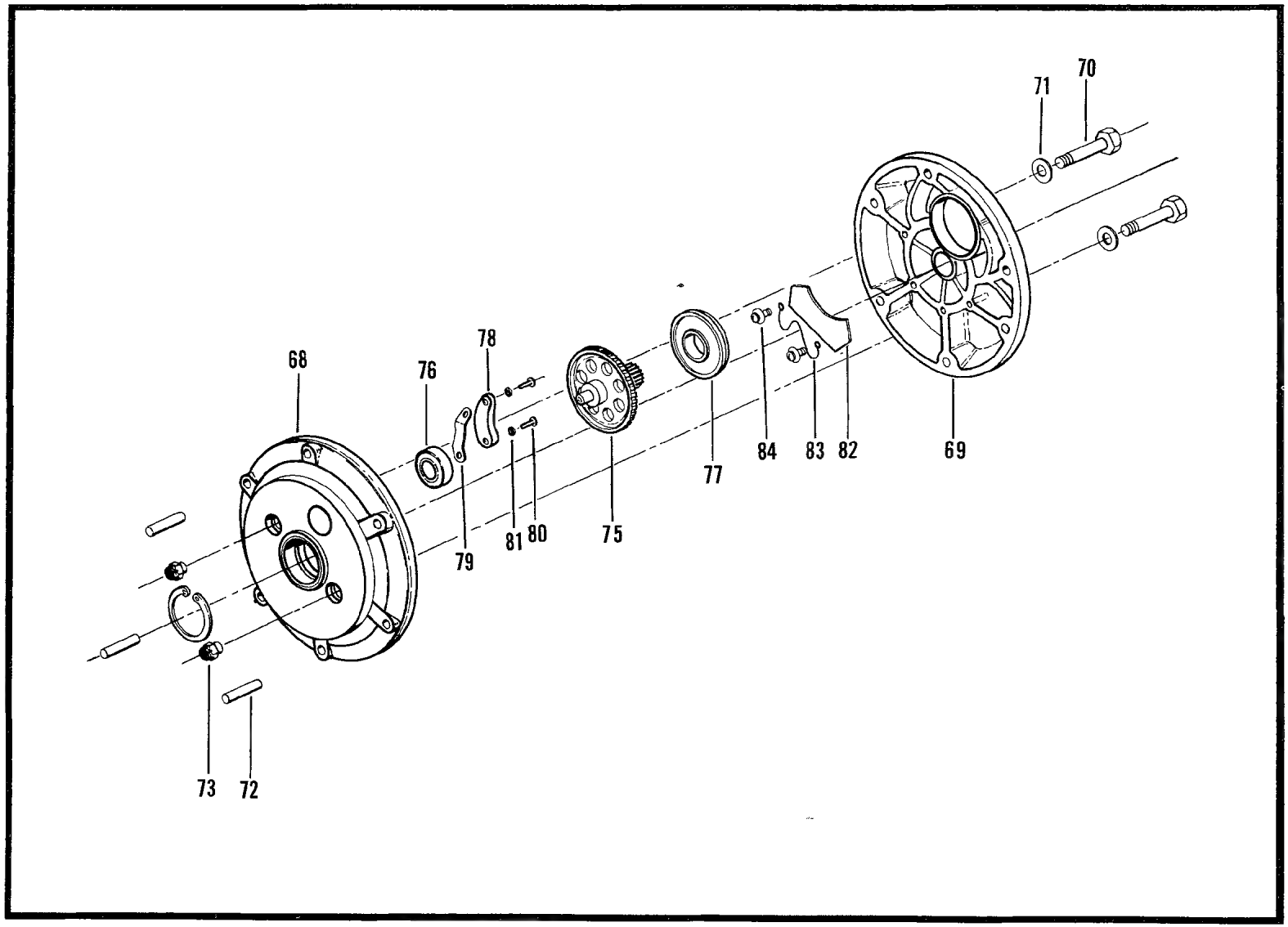

Figure 175D. Starter, Engine, Electrical (Gearing Assembly) (Sheet 3 of 4)

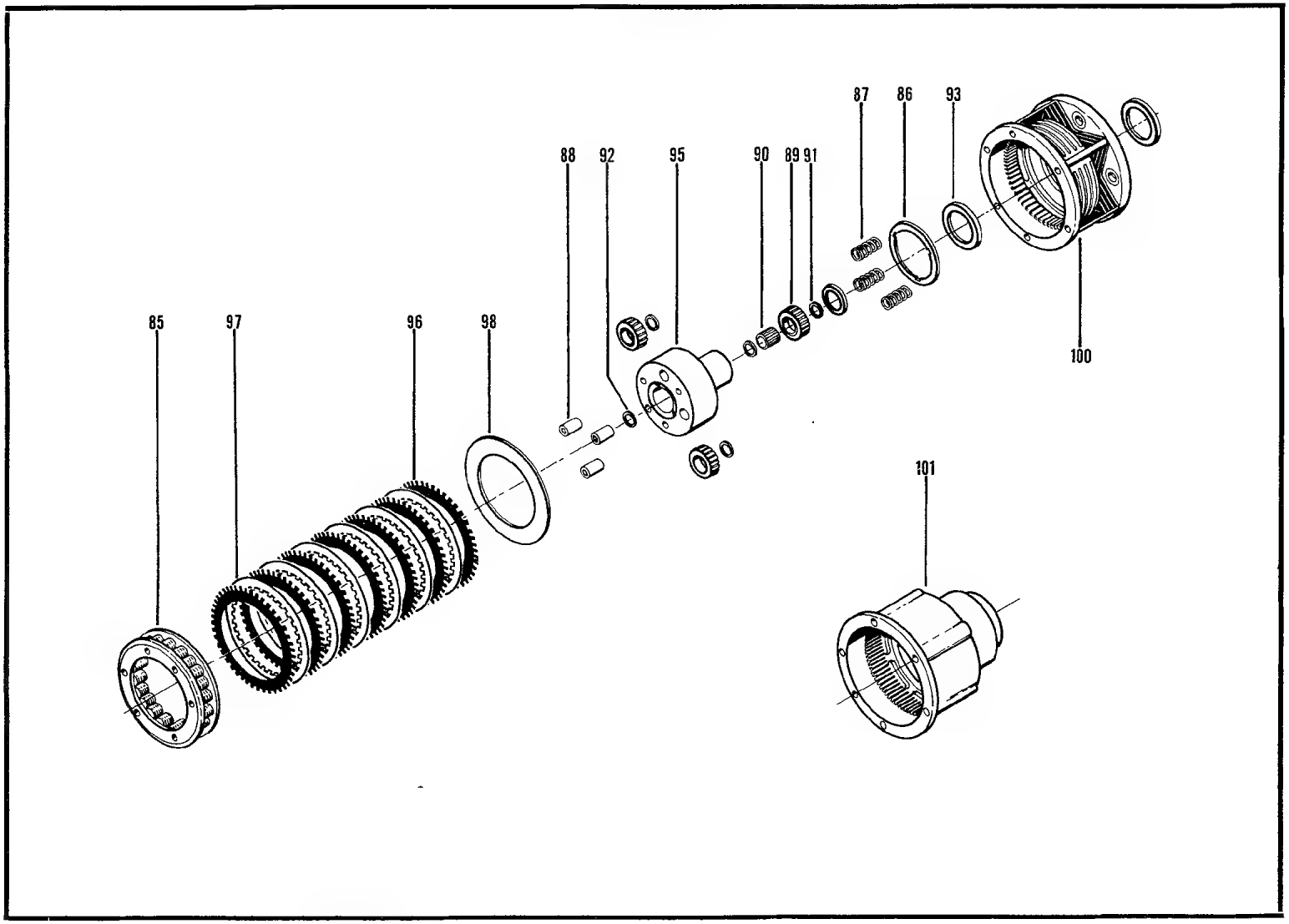

Figure 175D. Starter, Engine, Electrical (Base Assembly) (Sheet 4 of 4)

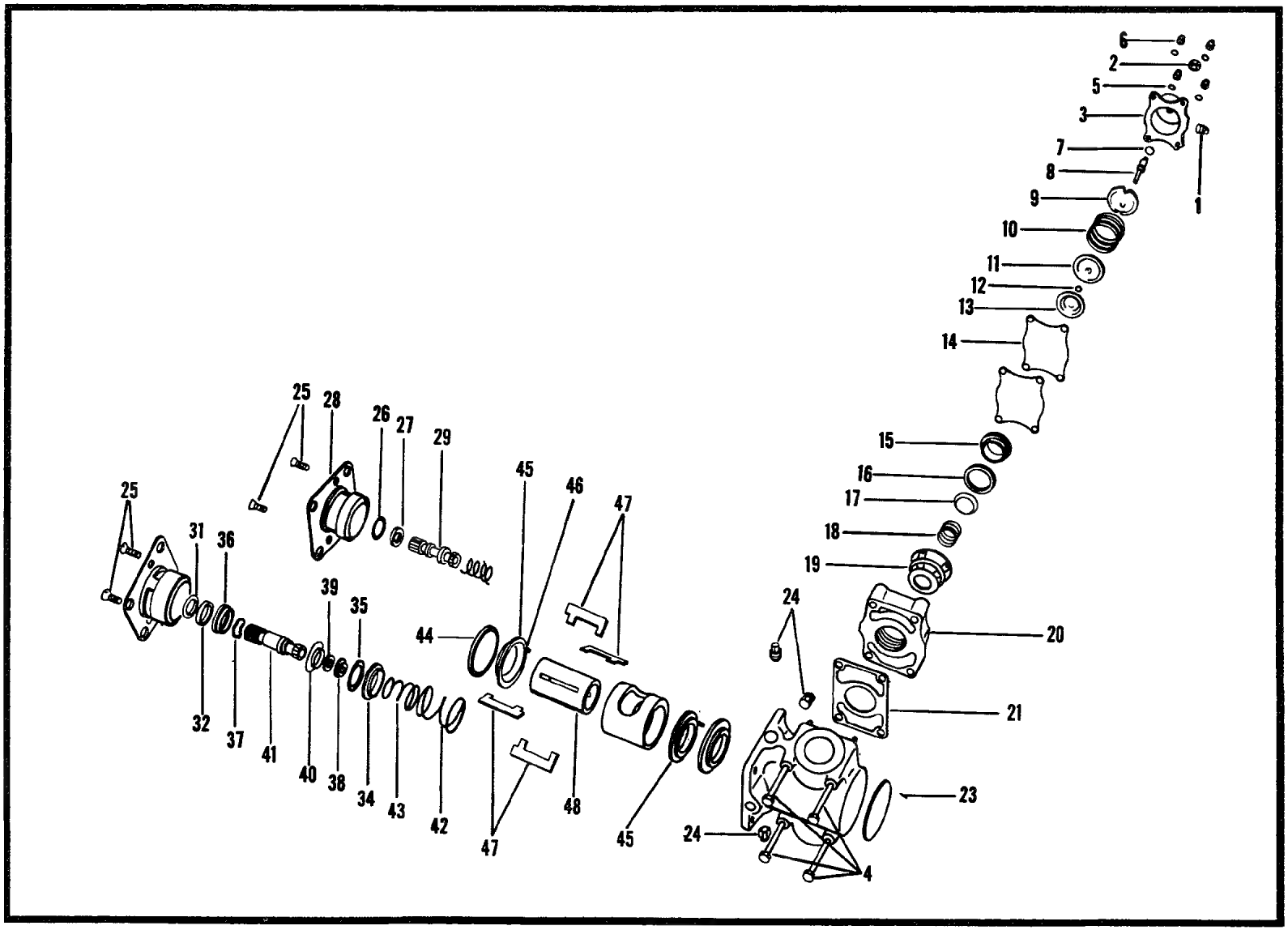

Figure 175E. Pump, Rotary, Power Driven

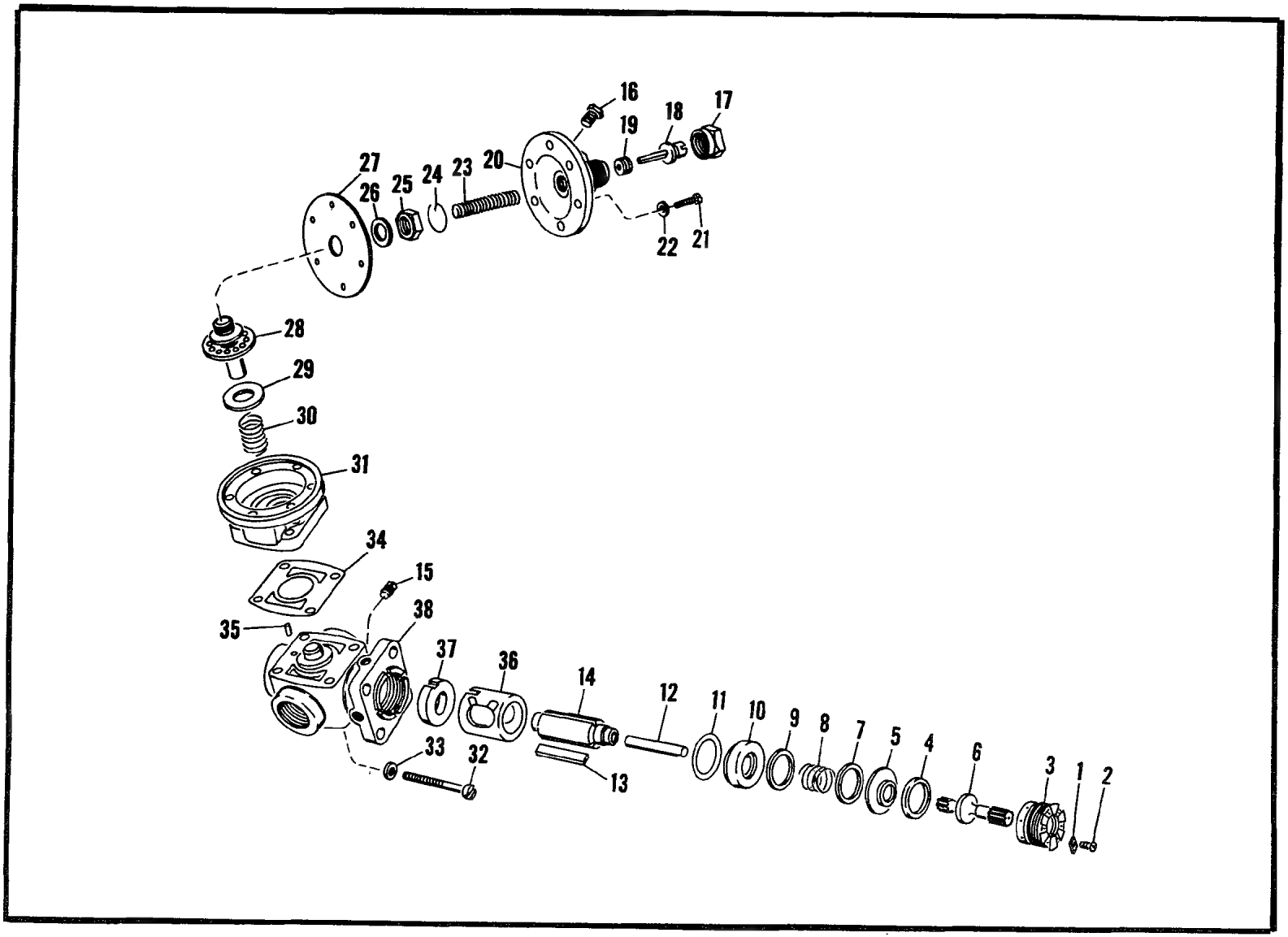

Figure 175F. Pump, Rotary, Power Driven

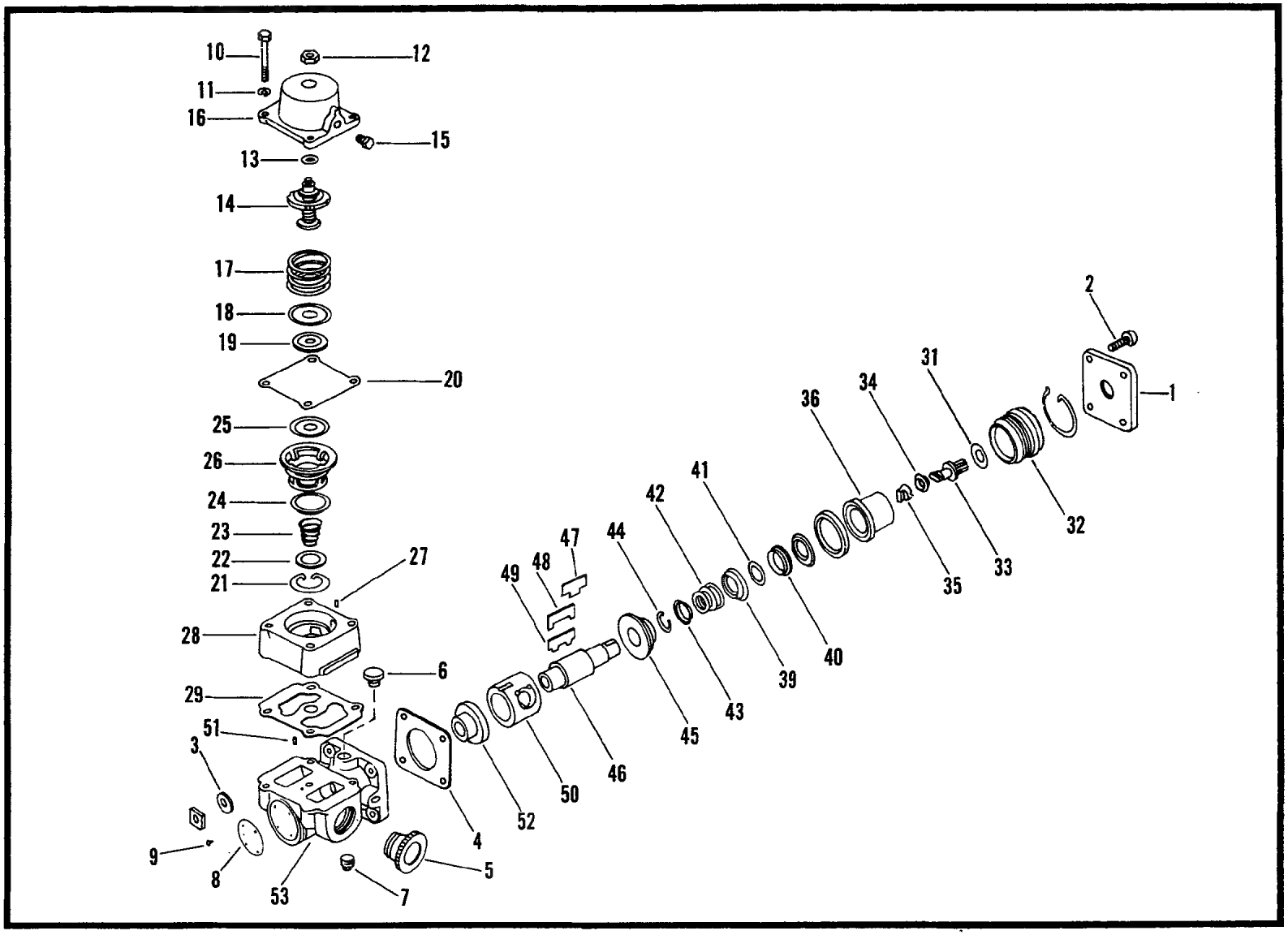

FIGURE 175G. PUMP, FUEL, VANE TYPE

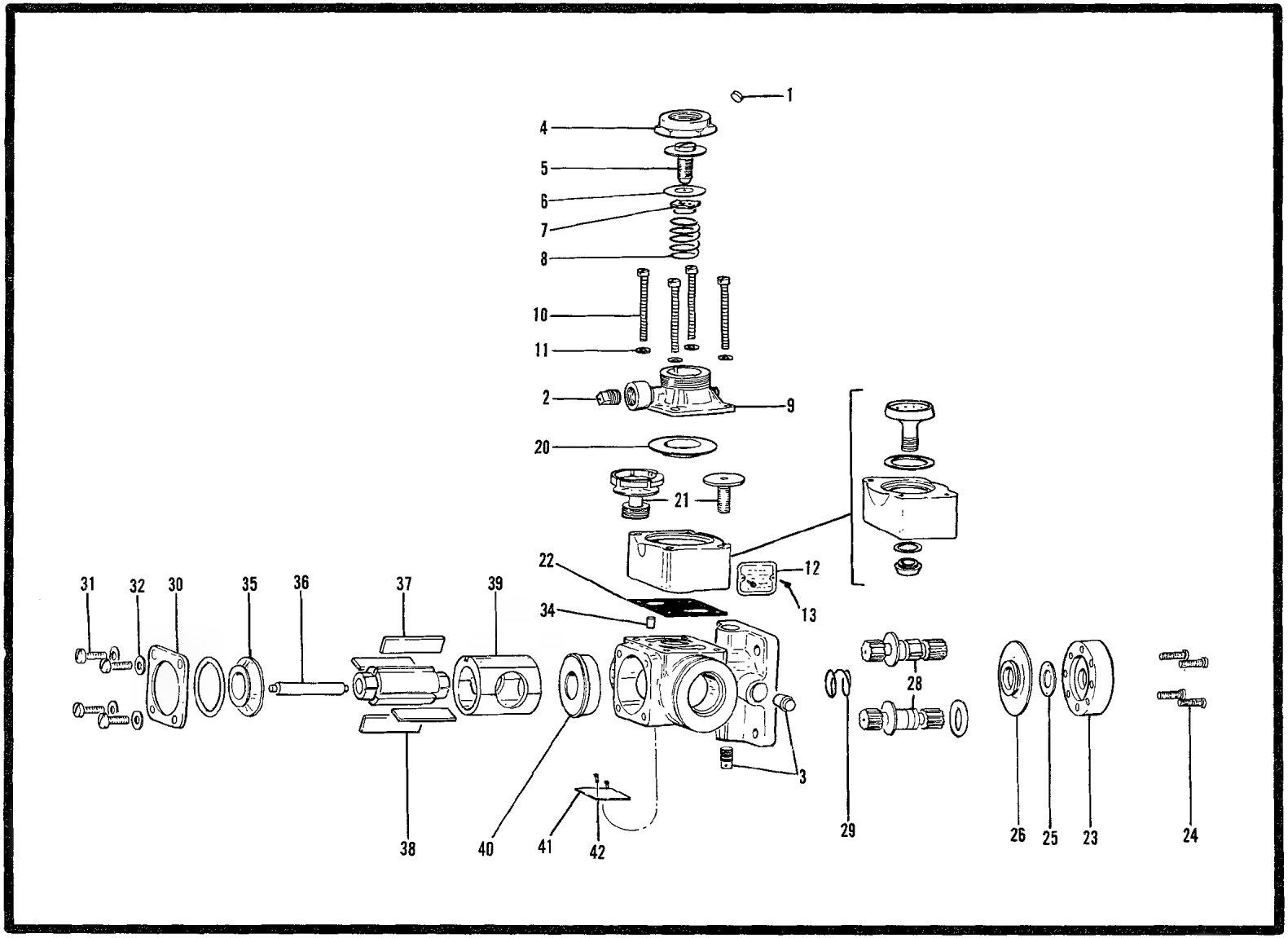

Figure 175H. Pump, Fuel, Vane Type

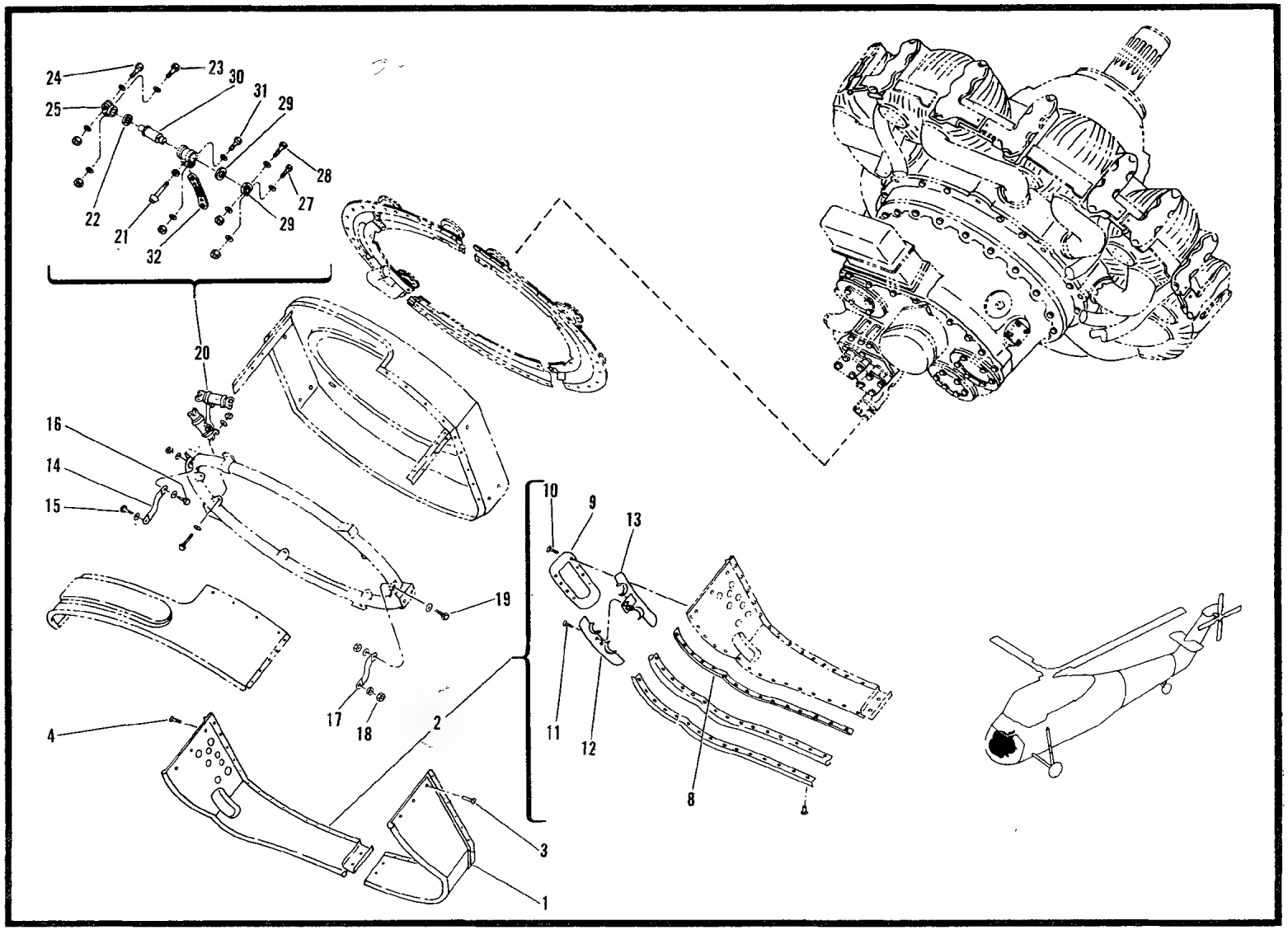

979 Figure 176. Engine Unit Assembly (Sheet 1 of 2)

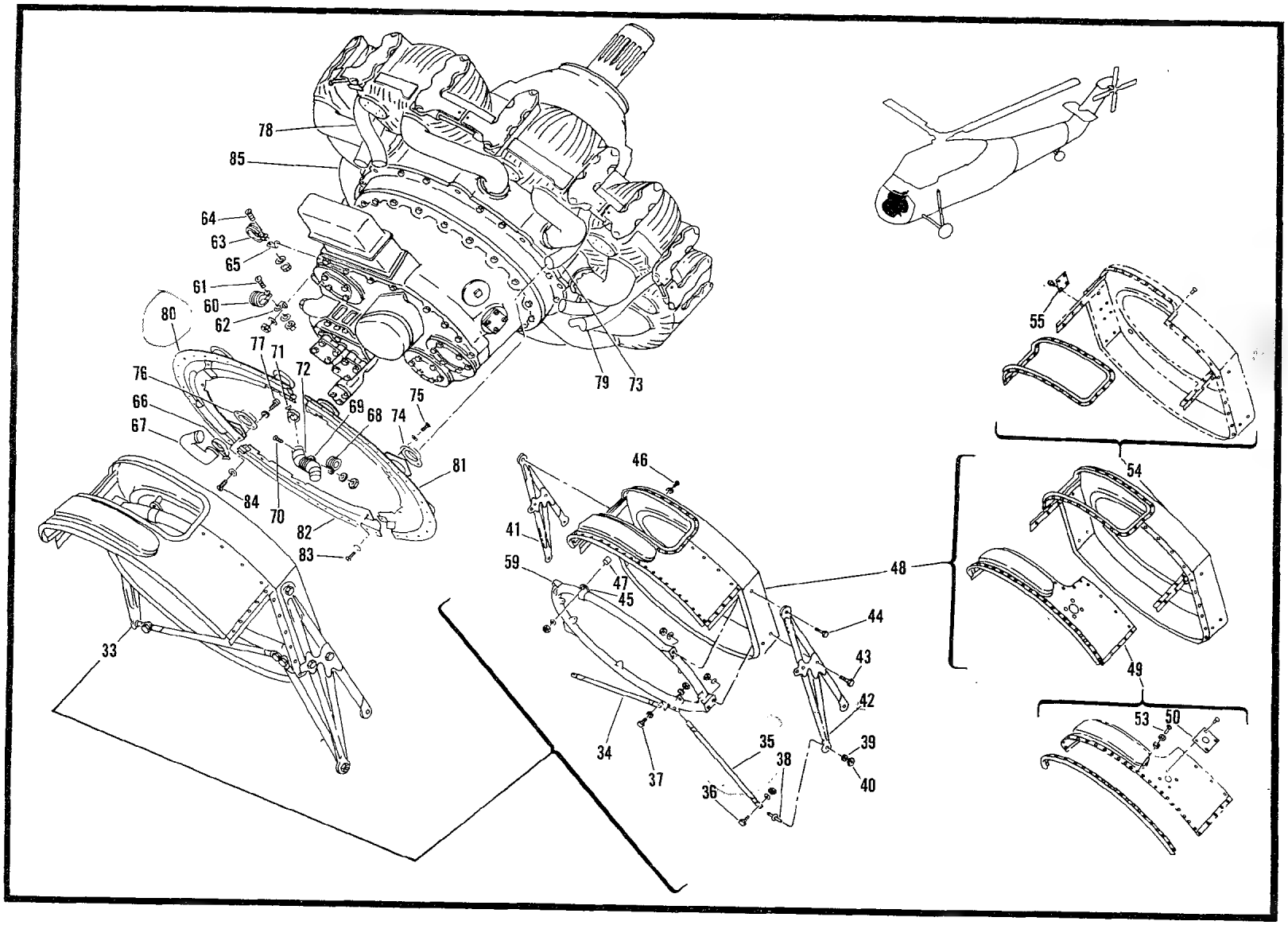

Figure 176. Engine Unit Assembly (Sheet 2 of 2)

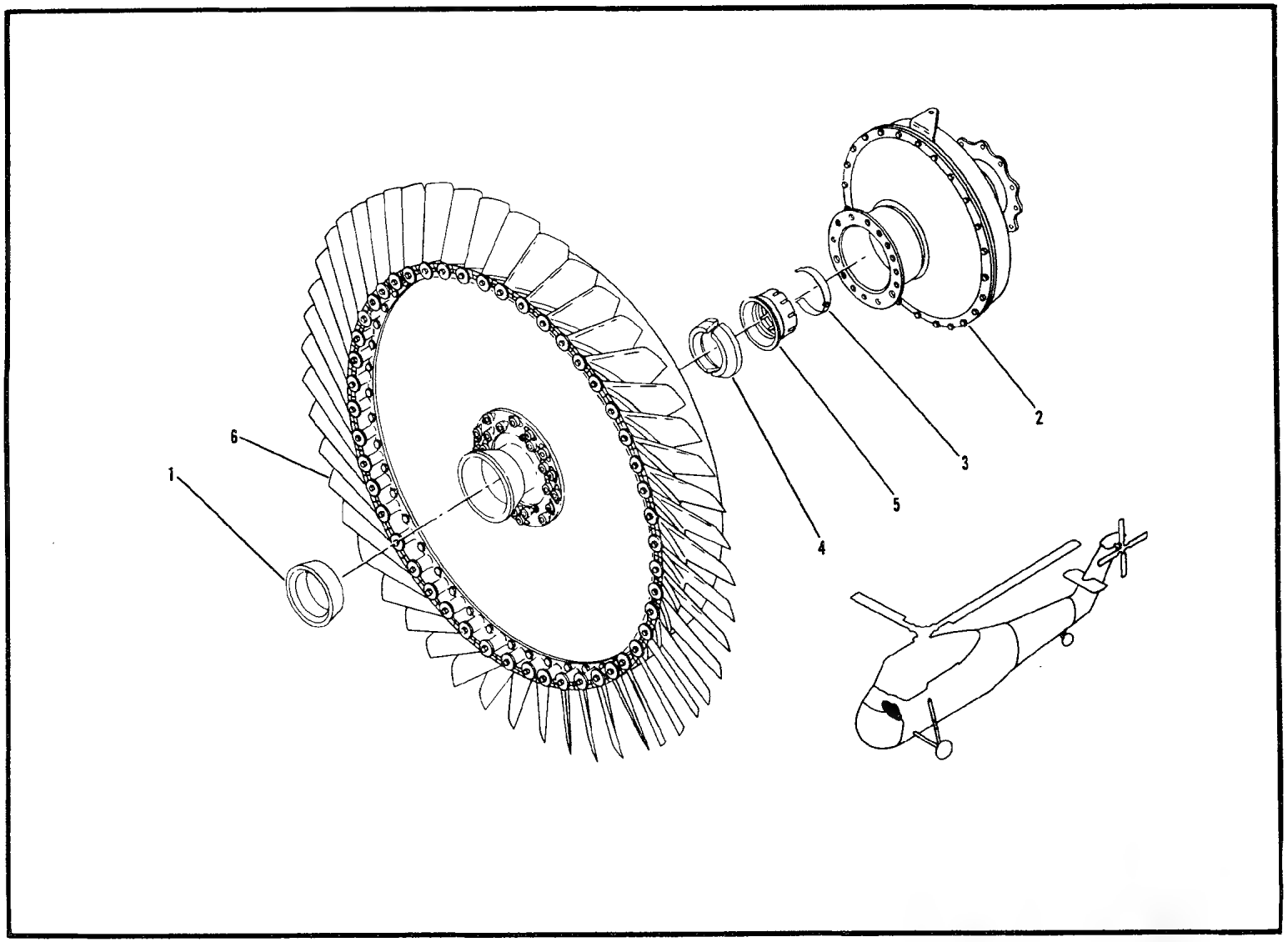

Figure 177. Clutch, Fan Assembly, Transmission System

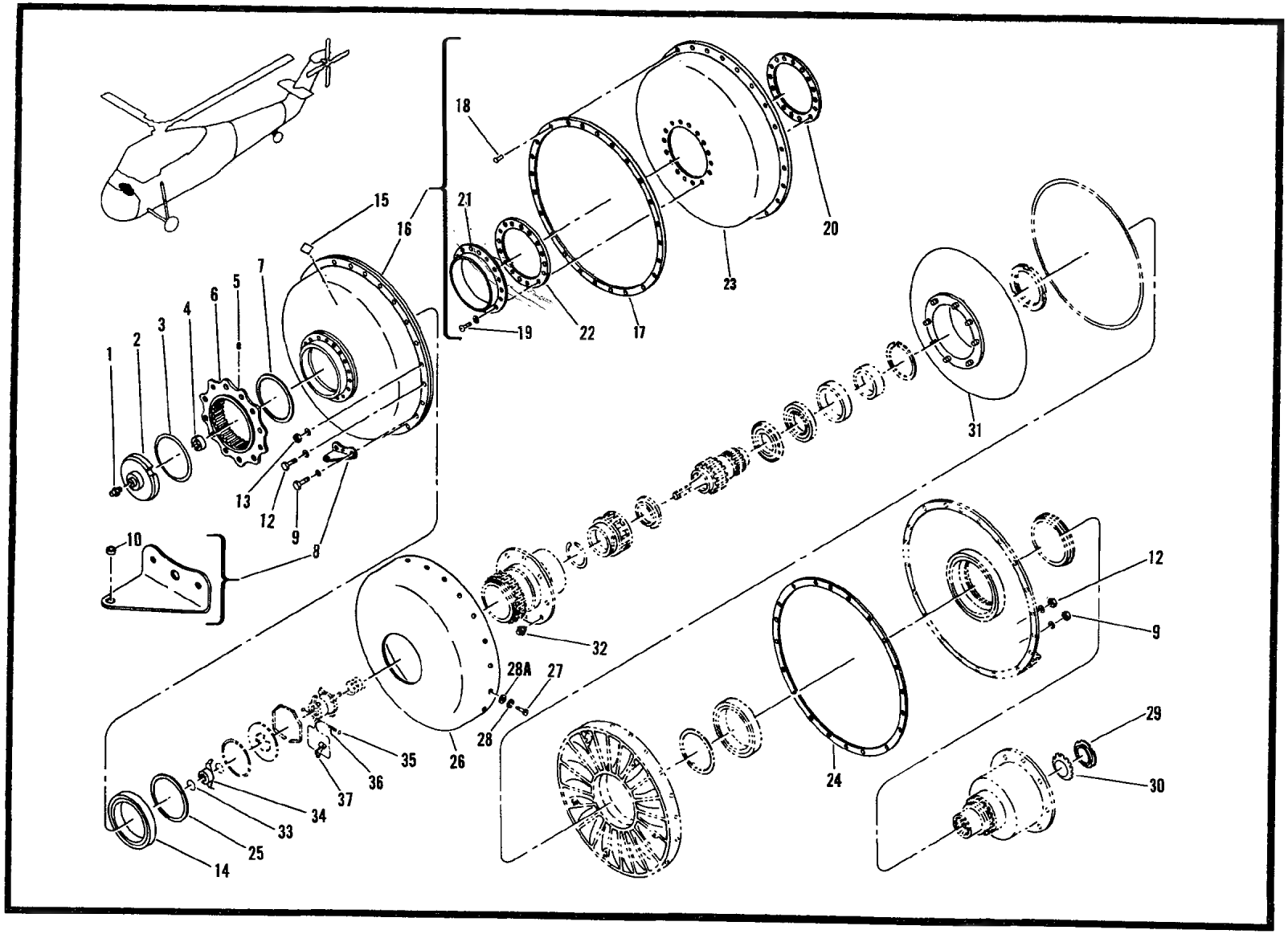

982 Figure 178. Clutch Assembly, Hydro-Mechanical (Sheet 1 of 2)

983

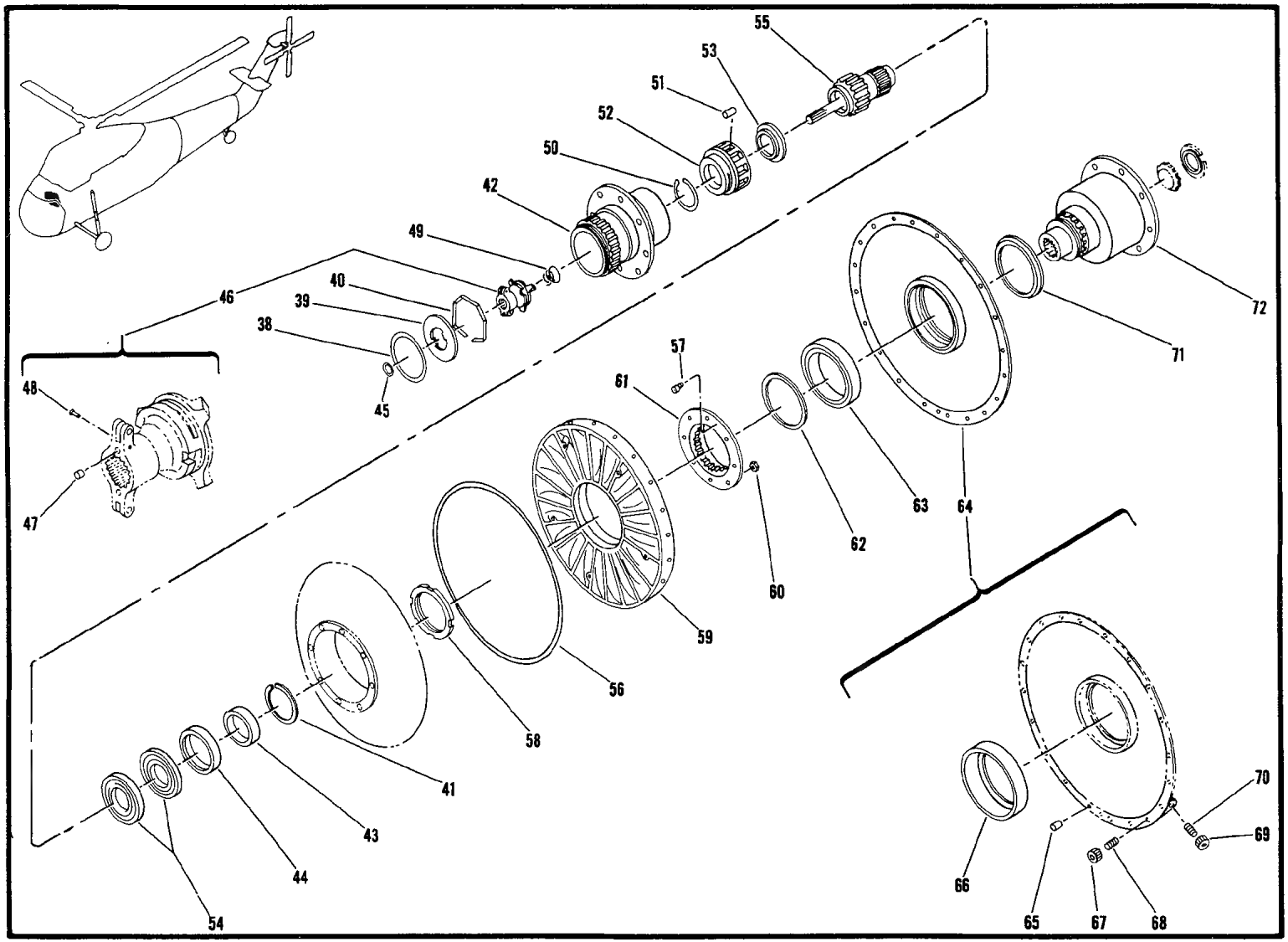

983

Figure 178. Clutch Assembly, Hydro-Mechanical (Sheet 2 of 2)

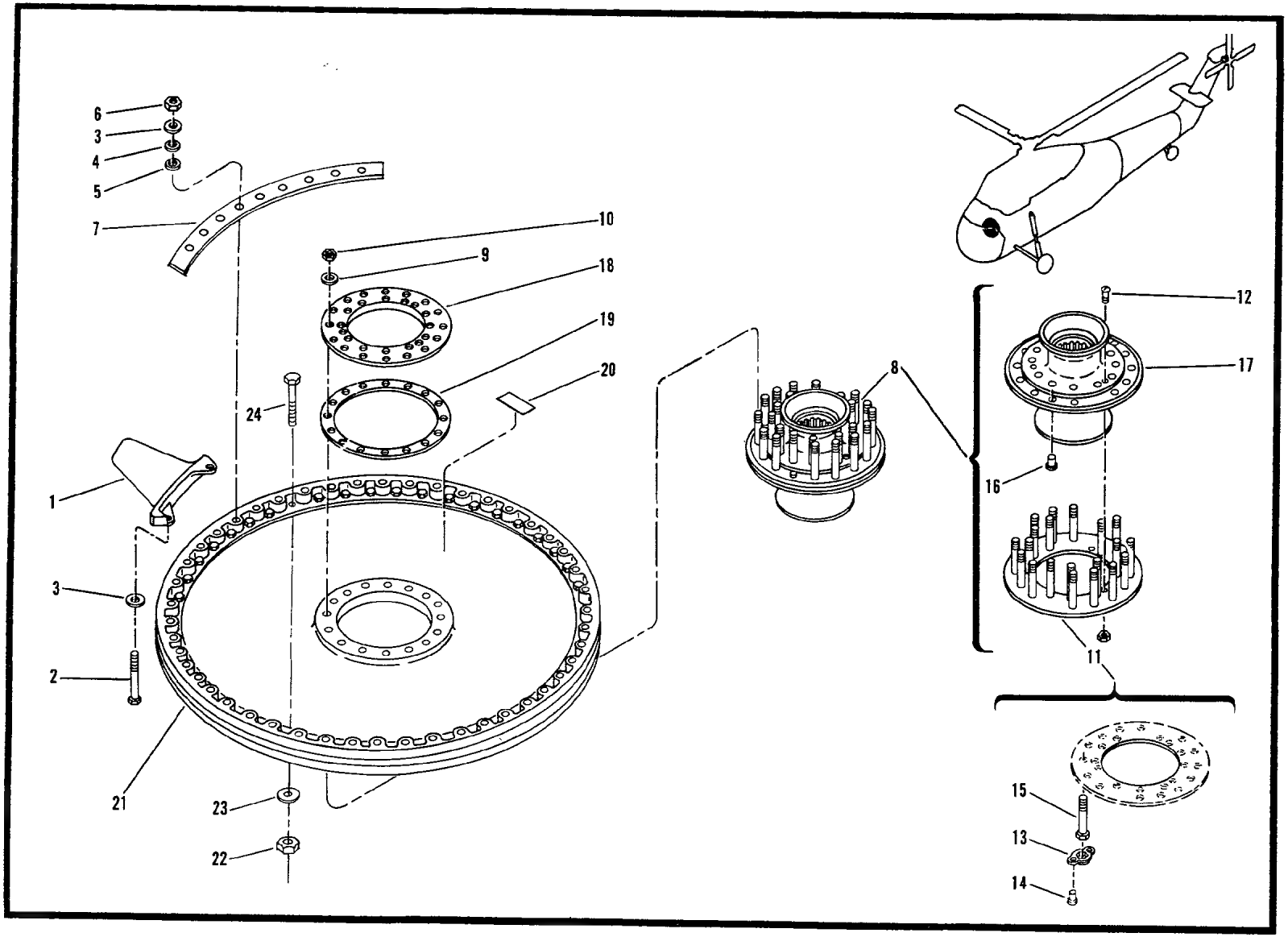

Figure 179. Fan Assembly

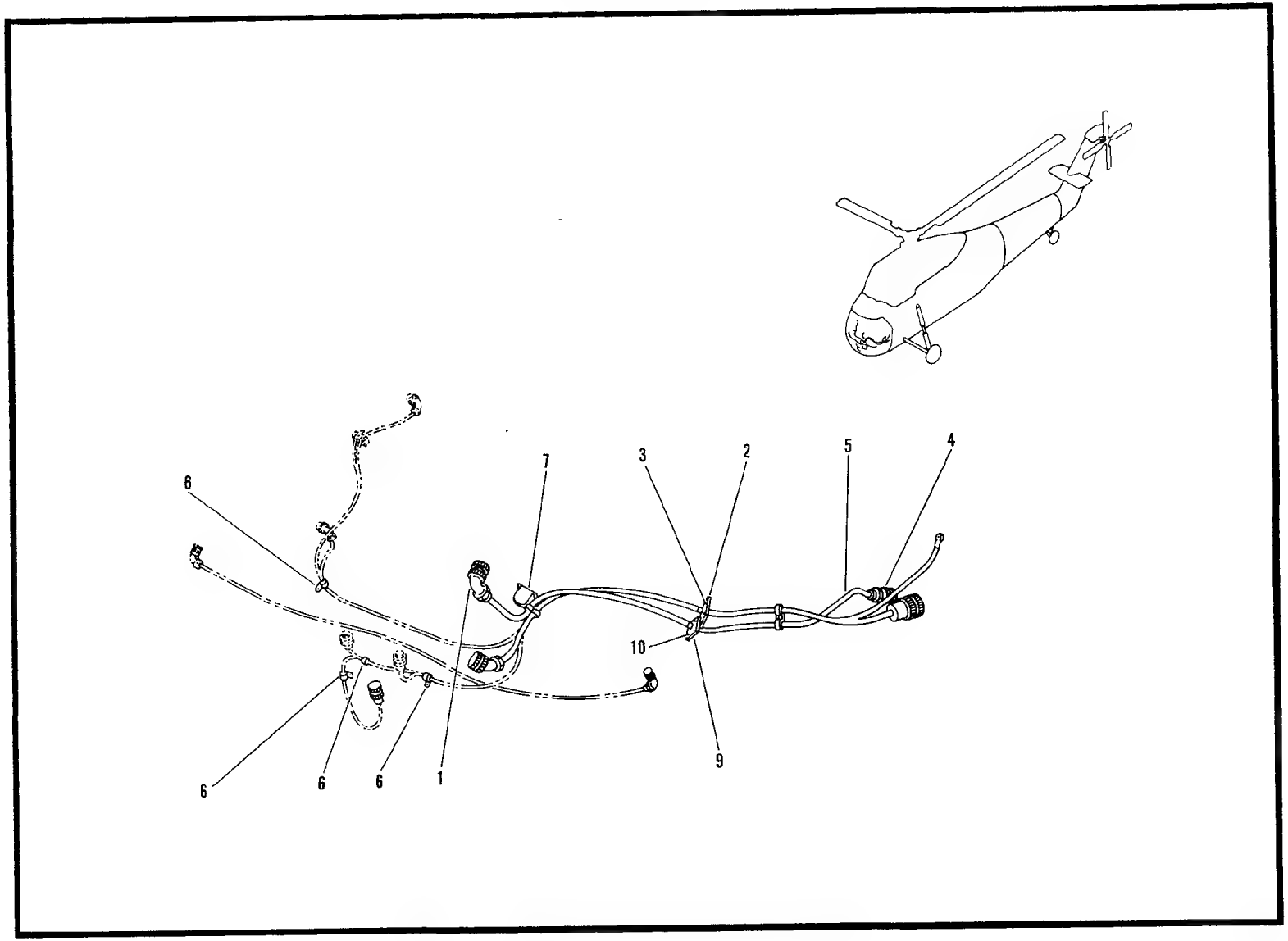

Figure 180. Electrical Wiring Installation

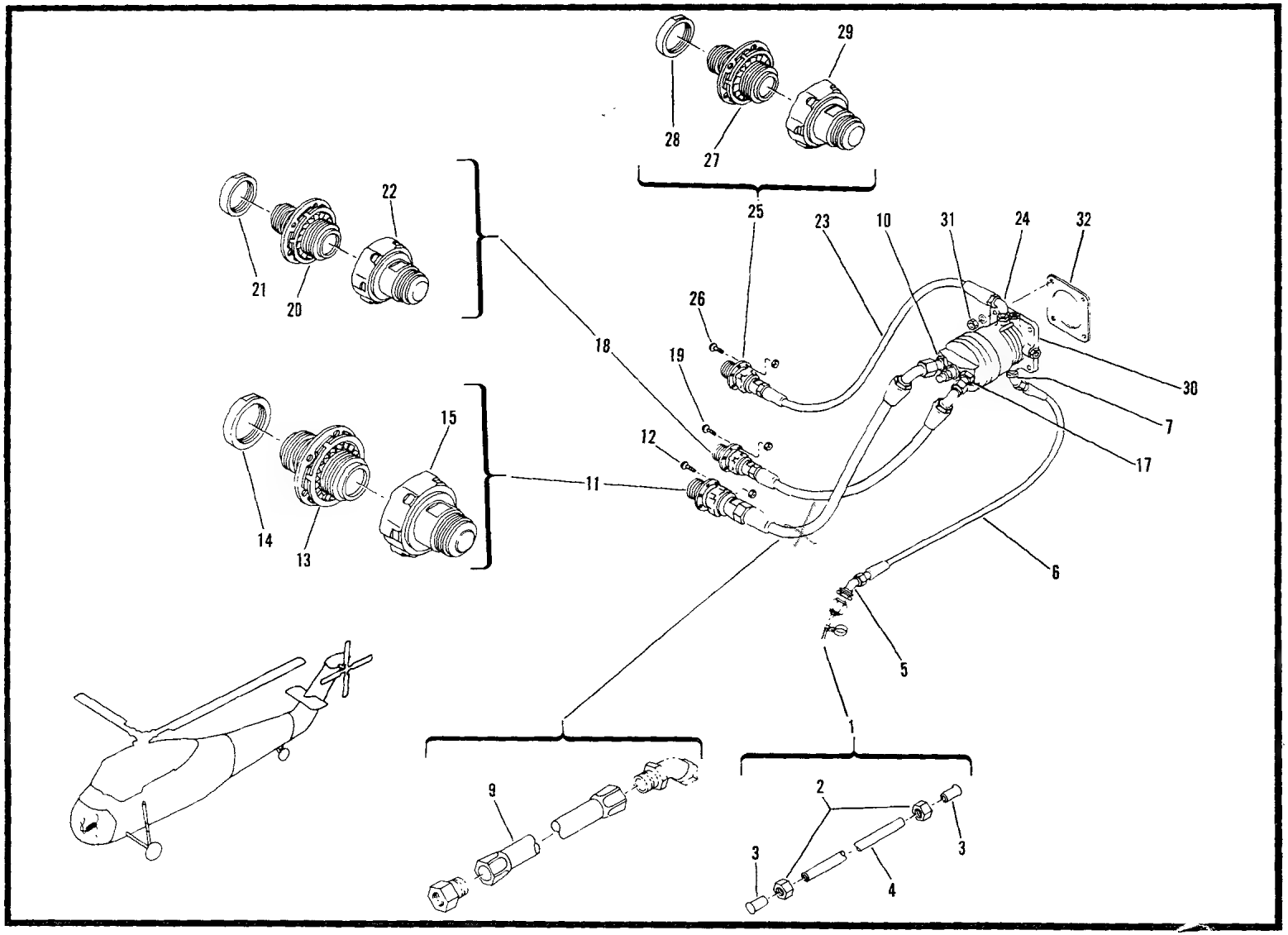

Figure 181. Hydraulic System Lines Installation

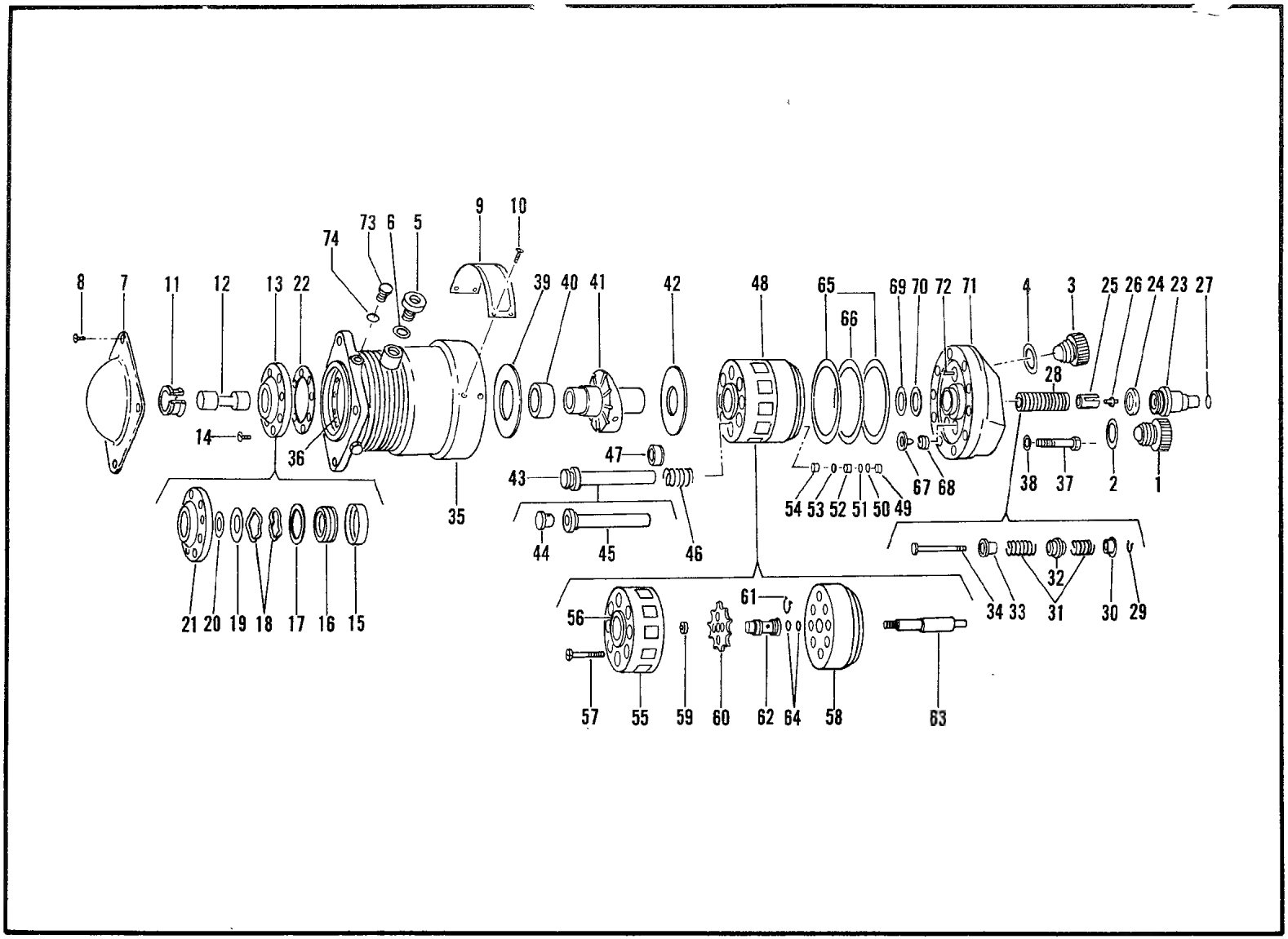

Figure 181A. Pump, Axial Piston

SECTION II

FUNCTIONAL GROUP 10

TRANSMISSION

(1) SOURCE, MAINT AND REC CODE (a) SOURCE CODE	(b) MAINT LEVEL	(c) REC CODE	(2) FEDERAL STOCK NUMBER	REFERENCE NUMBER		(3) DESCRIPTION	MODELS USABLE ON CH-34C	(4) UNIT OF ISSUE	(5) QTY INC IN UNIT PACK	(6) QTY INC IN UNIT	(7) 30-DAY DS/GS MAINT ALW (a) 1-20	(b) 21-50	(c) 51-100	(8) 1-YR ALW PER 100 EQUIP CNTGCY	(9) DEPOT MAINT ALW PER 100 EQUIP	(10) ILLUSTRATION (a) FIG NO	(b) ITEM NO
				S1635-90000-4	<78286>	MAIN DRIVE SHAFT INSTALLATION				1						182	
AF	F			S1635-92000-1	<78286>	.SHAFT ASSEMBLY.....		EA		1						182	1
						TRANSMISSION SEE FIG.183											
						FOR BREAKDOWN											
				NAS302-22-300	<80205>	.CABLE ASSEMBLY.....		EA		1						182	
P	F		1615-563-9950	S1635-91082-2	<78286>	.CABLE ASSEMBLY;.....		EA		1	2	3	5		*	182	
						HYDROMECHANICAL											
						RPLS-- 1560-575-6464											
P	O		4010-651-5487	NAS303-22-0254	<80205>	.WIRE ROPE ASSEMBLY SINGLE...		EA		1	6	16	32		*	182	2
						LEG											
						ATTACHING PARTS											
			5306-182-2058	AN3H5A	<88044>	.BOLT,MACHINE.....		EA		2	*	*	*		*	182	3
			5310-167-0818	AN960-10	<88044>	.WASHER,FLAT.....		HD		2	*	*	*		*	182	
			5310-877-5797	MS21044N3	<96906>	.NUT,SELF-LOCKING,HEXAGON....		EA		2	*	*	*		*	182	
						---*---											
P	F		1615-626-8402	S1635-91050-19	<78286>	.TUBE ASSEMBLY,CLUTCH.....		EA		1	*	*	*		*	182	4
			5310-282-7833	MS24400D12	<96906>	.NUT,PLAIN,HEXAGON.....		EA		1	*	*	*		*	182	5
			5310-183-4397	AN960PD1716	<88044>	.WASHER,FLAT.....		LL		2	*	*	*		*	182	
			4730-803-5051	MS24396D12	<96906>	.ELBOW,TUBE.....		EA		1	*	*	*		*	182	
MF	O			4720EG003-12-0330	<81996>	.HOSE ASSEMBLY.....		EA		1						182	
						TETRAFLUOROETHYLENE											
						MAKEFR											
						AR 4720-857-1734 HOSE											
						2 EA 4730-017-8660 NIPPLE											
						2 EA 4730-967-9518 SOCKET											
						2 EA 4730-967-9526 SLEEVE											
						2 EA 5340-833-7039 DUST PLUG											
MF	O			4720EG003-12-0370	<81996>	.HOSE ASSEMBLY;.....		EA		1						182	6
						TETRAFLUOROETHYLENE											
						USE-AFT-CMPL-W											
						MWO 55-1520-202-34/6											
						MAKEFR											
						AR 4720-857-1734 HOSE											
						2 EA 4730-017-8660 NIPPLE											
						2 EA 4730-967-9518 SOCKET											
						2 EA 4730-967-9526 SLEEVE											
						2 EA 5340-833-7039 DUST PLUG											
P	F		1560-587-6305	S1635-91062	<78286>	.HOSE ASSEMBLY USBL EFF.....		EA		1	*	*	*		*	182	
						53-4485 THRU 56-4312											
						OBS-AFT-CMPL-W											
						MWO 55-1520-202-34/6											
			4730-277-5077	AN6289D12	<88044>	.LOCKNUT,TUBE FITTING.....		EA		1	*	*	*		*	182	7
			5330-251-8839	MS28778-12	<96906>	.PACKING,PREFORMED.....		EA		1	REF	REF	REF		*	182	8
			5330-684-3206	AN6291-12	<88044>	.WASHER,NONMETALLIC.....		EA		1	*	*	*		*	182	9
			4730-803-5051	MS24396D12	<96906>	.ELBOW,TUBE.....		EA		1	*	*	*		*	182	10
P	O		1615-626-8401	S1635-91050-17	<78286>	.TUBE ASSEMBLY.....		EA		1	*	*	*		*	182	11
			5310-208-4112	MS24400D16	<96906>	.NUT,SELF-LOCKING,HEXAGON....		EA		1	*	*	*		*	182	12
			5310-183-4356	AN960PD2116	<88044>	.WASHER,FLAT.....		EA		2	*	*	*		*	182	
			4730-279-0122	MS24396D16	<96906>	.ELBOW,TUBE.....		EA		1	*	*	*		*	182	
P	O		1560-631-1074	S1635-91049-6	<78286>	.HOSE ASSEMBLY,RUBBER.....		EA		1	*	2	2		*	182	13
						RPLS-- 1560-572-8280,											
						4720-614-1756											

(1) SOURCE, MAINT AND REC CODE (a) SOURCE CODE	(b) MAINT LEVEL	(c) REC CODE	(2) FEDERAL STOCK NUMBER	REFERENCE NUMBER	(3) DESCRIPTION	MODELS USABLE ON CH-34C	(4) UNIT OF ISSUE	(5) QTY INC IN UNIT PACK	(6) QTY INC IN UNIT	(7) 30-DAY DS/GS MAINT ALW (a) 1-20	(b) 21-50	(c) 51-100	(8) 1-YR ALW PER 100 EQUIP CNTGCY	(9) DEPOT MAINT ALW PER 100 EQUIP	(10) ILLUSTRATION (a) FIG NO	(b) ITEM NO
					CONTINUED										182	13
					ATTACHING PARTS											
			5310-088-0553	MS21044N5 <96906>	.NUT,SELF-LOCKING,HEXAGON....		HD		3	*	*	*		*	182	14
					---*---											
P	O		5330-663-7158	AN4171-16 <88044>	.GASKET.....		EA		1	18	44	89		*	182	15
P	F		1560-056-0555	NAS303-22-201 <80205>	.WIRE ROPE ASSEMBLY.....		EA		3	2	3	6		*	182	16
					ATTACHING PARTS											
			5306-182-2058	AN3H5A <88044>	.BOLT,MACHINE.....		EA		1	*	*	*		*	182	17
			5310-167-0818	AN960-10 <88044>	.WASHER,FLAT.....		HD		1	*	*	*		*	182	
			5310-183-4406	AN960PD10 <88044>	.WASHER,FLAT.....		HD		1	*	*	*		*	182	
			5310-877-5797	MS21044N3 <96906>	.NUT,SELF-LOCKING,HEXAGON....		EA		6	*	*	*		*	182	
					---*---											
			5306-638-2216	AN42-4 <88044>	.BOLT,EYE.....		EA		3	*	*	*		*	182	18
			5310-167-0765	AN970-3 <88044>	.WASHER,FLAT.....		HD		2	*	*	*		*	182	
			5310-877-5797	MS21044N3 <96906>	.NUT,SELF-LOCKING,HEXAGON....		EA		6	*	*	*		*	182	
			5306-638-2217	AN4285 <88044>	.BOLT,EYE.....		EA		1	*	*	*		*	182	19
			5310-183-4406	AN960PD10 <88044>	.WASHER,FLAT.....		HD		1	*	*	*		*	182	
			5310-877-5797	MS21044N3 <96906>	.NUT,SELF-LOCKING,HEXAGON....		EA		6	*	*	*		*	182	
AF	F			S1635-92000-1 <78286>	SHAFT ASSEMBLY,.....		EA								183	
					TRANSMISSION SEE FIG.182											
					FOR NHA											
P	F		1615-310-1422	S1635-92006 <78286>	.FLANGE,TRANSMISSION SYSTEM..		EA		1	*	*	2		*	183	1
					ATTACHING PARTS											
			5306-680-6309	NAS626-10 <80205>	.BOLT,MACHINE.....		EA		12	*	*	*		*	183	2
			5310-184-8974	MS9320-12 <96906>	.WASHER,THRUST.....		EA		24	*	*	*		*	183	
			5310-149-9146	MS20002C6 <96906>	.WASHER,RECESSED.....		HD		12	*	*	*		*	183	
			5310-982-4908	MS21045-6 <96906>	.NUT,SELF-LOCKING,HEXAGON....		HD		12	*	*	*		*	183	
			5306-816-3223	NAS626-20 <80205>	.BOLT,MACHINE.....		EA		12	*	*	*		*	183	3
			5310-184-8974	AN122584 <88044>	.WASHER,THRUST.....		EA		24	*	*	*		*	183	
			5310-149-9146	MS20002C6 <96906>	.WASHER,RECESSED.....		HD		12	*	*	*		*	183	
			5310-982-4908	MS21045-6 <96906>	.NUT,SELF-LOCKING,HEXAGON....		HD		12	*	*	*		*	183	
					---*---											
P	F		1615-305-4180	S1635-92004-4 <78286>	.SPACER,MAIN DRIVE SHAFT.....		EA		1	*	2	2		*	183	4
					RPLS-- 1560-308-3537											
			1615-308-0166	S1635-92004-2 <78286>	.SPACER,MAIN DRIVE SHAFT.....										183	
					RPL-BY 1560-305-4181											
P	F		1615-305-4181	S1635-92004-5 <78286>	.SPACER,MAIN DRIVE SHAFT.....		EA		1	*	2	2		*	183	5
					RPLS--1615-308-0166											
P	F		1615-305-4182	S1635-92004-6 <78286>	.SPACER,MAIN DRIVE SHAFT.....		EA		1	*	2	2		*	183	6
					RPLS-- 1560-308-3538											
MF	F			CH6H <79550>	.JUMPER,BONDING.....		EA		1						183	7
					MAKEFR											
					AR 6145-628-7753 WIRE											
			1560-305-4177	S1635-92001-2 <78286>	.COUPLING ASSEMBLY,MAIN.....										183	
					DRIVE SHAFT RPL-BY											
					1560-564-1506											

(1) SOURCE, MAINT AND REC CODE (a) SOURCE CODE	(b) MAINT LEVEL	(c) RECOV CODE	(2) FEDERAL STOCK NUMBER	REFERENCE NUMBER		(3) DESCRIPTION	MODELS USABLE ON CH-34C	(4) UNIT OF ISSUE	(5) QTY INC IN UNIT PACK	(6) QTY INC IN UNIT	(7) 30-DAY DS/GS MAINT ALW (a) 1-20	(b) 21-50	(c) 51-100	(8) 1-YR ALW PER 100 EQUIP CNTGCY	(9) DEPOT MAINT ALW PER 100 EQUIP	(10) ILLUSTRATION (a) FIG NO	(b) ITEM NO
P	F		1560-564-1506	S1635-92001-3	<78286>	.COUPLING ASSEMBLY RPLS--... 1560-305-4176, 1560-305-4177		EA		1	2	2	4		*	183	8
						ATTACHING PARTS											
			5306-680-6309	NAS626-10	<80205>	.BOLT,MACHINE.....		EA		12	*	*	*		*	183	9
			5310-184-8974	AN122584	<88044>	.WASHER,THRUST.....		EA		12	*	*	*		*	183	
			5310-149-9146	MS20002C6	<96906>	.WASHER,RECESSED.....		HD		12	*	*	*		*	183	
			5310-824-4908	MS21045-6	<96906>	.NUT,SELF-LOCKING,HEXAGON....		HD		12	*	*	*		*	183	
						---*---											
P	F		1615-306-4447	S1635-92005	<78286>	.SHAFT,MAIN DRIVE.....		EA		1	*	*	2		*	183	10
						ATTACHING PARTS											
P	F		5306-680-6308	NAS626-12	<80205>	.BOLT,MACHINE.....		EA		12	*	*	*		*	183	11
			5310-184-8974	AN122584	<88044>	.WASHER,THRUST.....		EA		12	*	*	*		*	183	
			5310-149-9146	MS20002C6	<96906>	.WASHER,RECESSED.....		HD		12	*	*	*		*	183	
			5310-167-0821	AN960-616	<88044>	.WASHER,FLAT.....		HD		12	*	*	*		*	183	
			5310-982-4908	MS21045-6	<96906>	.NUT,SELF-LOCKING,HEXAGON....		HD		12	*	*	*		*	183	
						---*---											
			1560-305-4179	S1635-92003-2	<78286>	.COUPLING ASSEMBLY,MAIN..... DRIVE SHAFT RPL-BY 1560-564-1507										183	
P	F		1560-564-1507	S1635-92003-3	<78286>	.COUPLING ASSEMBLY,MAIN..... DRIVE SHAFT RPLS-- 1560-305-4178, 1560-305-4179		EA		1	2	2	3		*	183	12
						ATTACHING PARTS											
			5306-680-6309	NAS626-10	<80205>	.BOLT,MACHINE.....		EA		12	*	*	*		*	183	13
			5310-184-8974	AN122584	<88044>	.WASHER,THRUST.....		EA		12	*	*	*		*	183	
			5310-149-9146	MS20002C6	<96906>	.WASHER,RECESSED.....		HD		12	*	*	*		*	183	
			5310-982-4908	MS21045-6	<96906>	.NUT,SELF-LOCKING,HEXAGON....		HD		12	*	*	*		*	183	
						---*---											

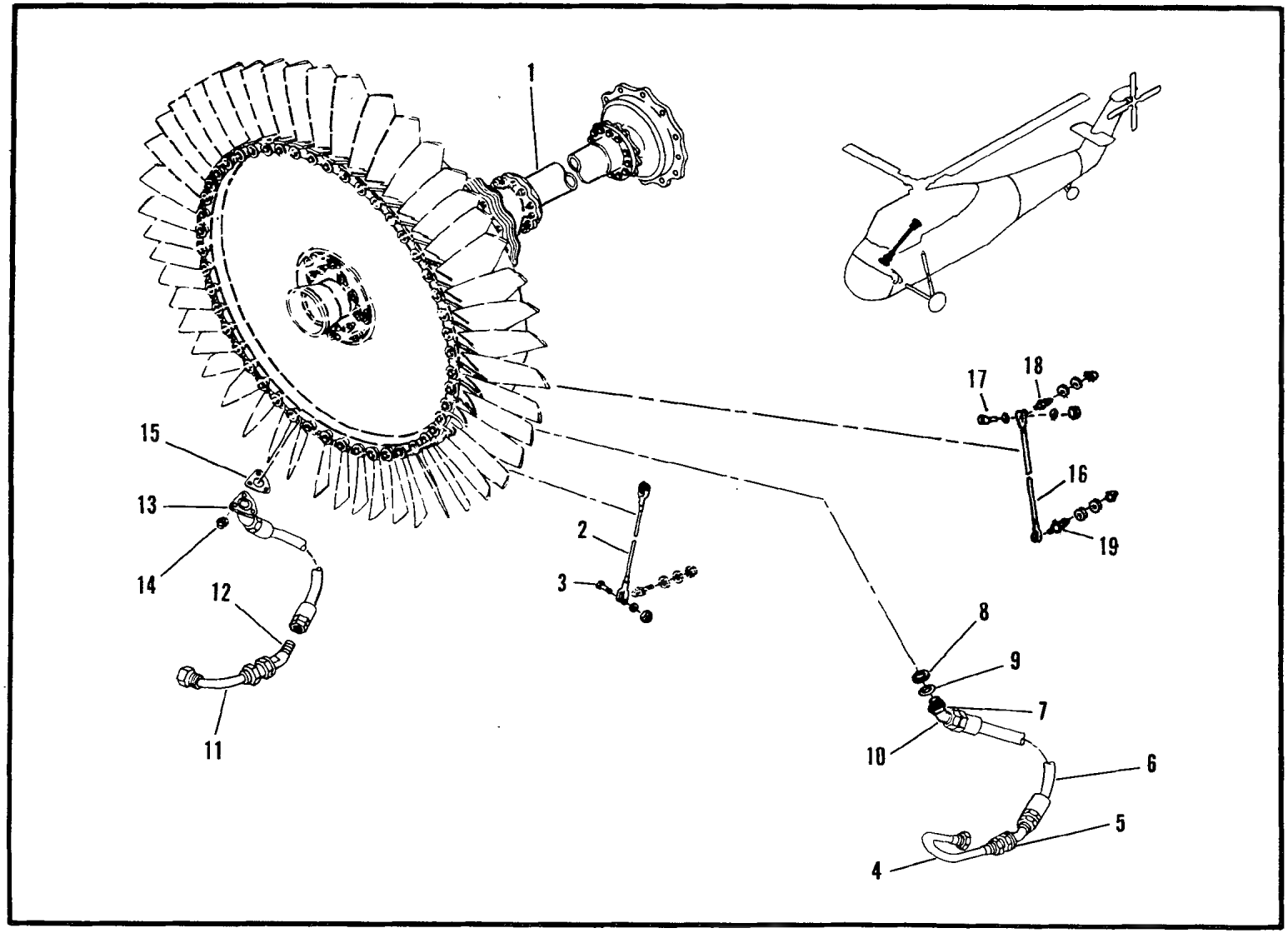

Figure 182. Main Drive Shaft Installation

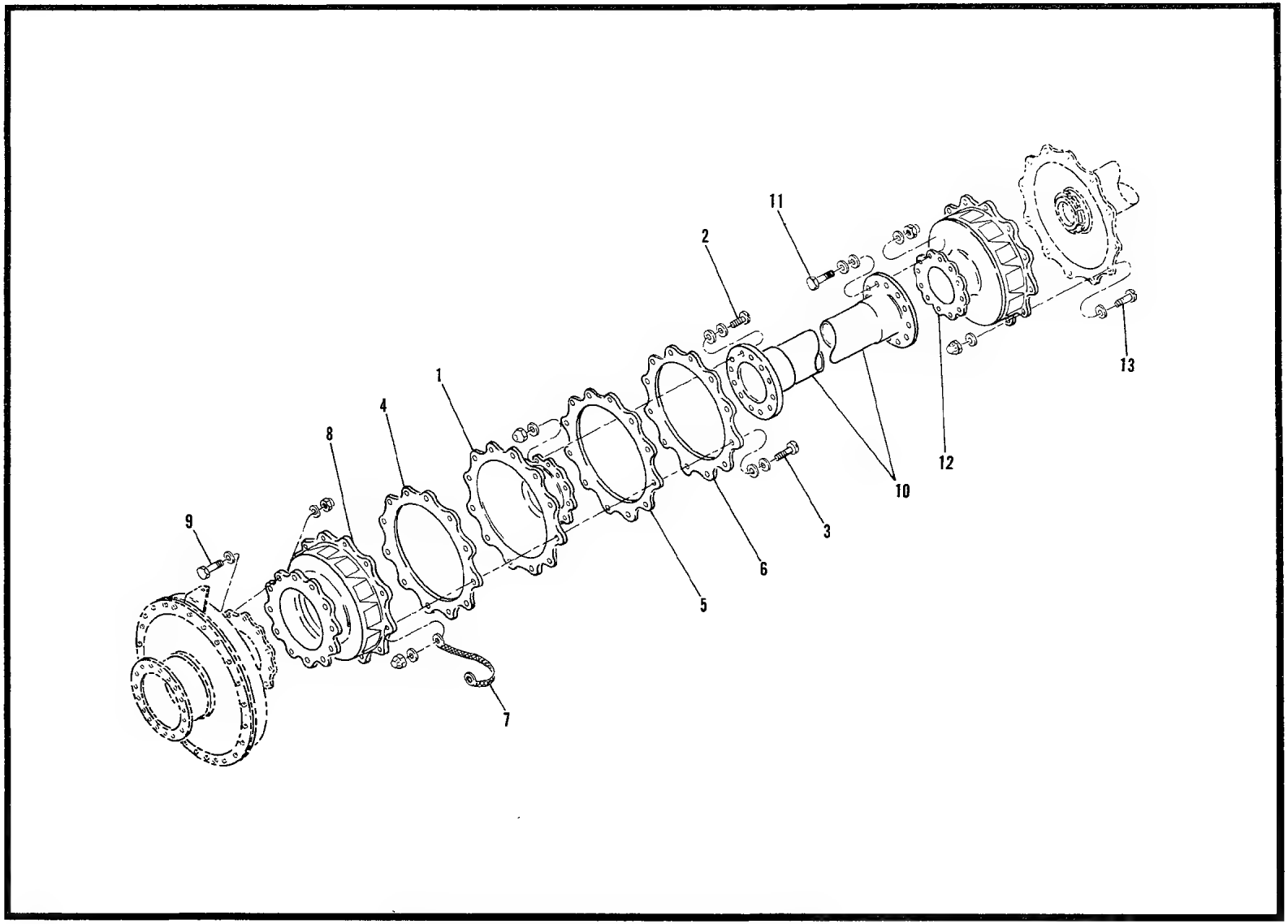

Figure 183. Shaft Assembly, Transmission

SECTION II

FUNCTIONAL GROUP 11

ENGINE

(1) SOURCE, MAINT AND REC CODE (a) SOURCE CODE	(b) MAINT LEVEL	(c) REC CODE	(2) FEDERAL STOCK NUMBER	REFERENCE NUMBER	(3) DESCRIPTION	MODELS USABLE ON CH-34C	(4) UNIT OF ISSUE	(5) QTY INC IN UNIT PACK	(6) QTY INC IN UNIT	(7) 30-DAY DS GS MAINT ALW (a) 1-20	(b) 21-50	(c) 51-100	(8) 1-YR ALW PER 100 EQUIP CNTGCY	(9) DEPOT MAINT ALW PER 100 EQUIP	(10) ILLUSTRATION (a) F G NO	(b) ITEM NO
					ENGINE,AIRCRAFT,RECIPROCATING	12									183A	
		T	2810-654-1504	R1820-84A <66640>	ENGINE,AIRCRAFT,..... RECIPROCATING RPL-BY 2810-953-9495 SEE FIG.176 FOR NHA	12									183A	
P	F	T	2810-953-9495	R1820-84C <66640>	ENGINE,AIRCRAFT..... RECIPROCATING RPLS-- 2810-654-1504 SEE FIG.176 FOR NHA	12	EA			REF	REF	REF	REF		183A	
					.CRANKCASE,FRONT SECTION..... SEE FIG.184 FOR BREAKDOWN	12			1						183A	1
					.OIL SEPARATOR SPINNER..... DRIVE SEE FIG.185 FOR BREAKDOWN	12			1						183A	2
					.PROPELLER SHAFT SEE FIG.... 186 FOR BREAKDOWN	12			1						183A	3
					.PROPELLER SHAFT COUPLING.... AND CAM MECHANISM SEE FIG.187 FOR BREAKDOWN	12			1						183A	4
					.CRANKSHAFT AND CONNECTING... RODS SEE FIG.188 FOR BREAKDOWN	12			1						183A	5
		U	2810-987-5188	433474 <66640>	.CRANKCASE ASSEMBLY,MAIN..... RPL-BY 2810-077-1757	12									183A	
P	D		2810-077-1757	433965 <66640>	.CRANKCASE,MAIN SECTION..... MACHINING ASSEMBLY RPLS-- 2810-987-5188 OBSLTS 2810-217-3731 SEE FIG.189 FOR BREAKDOWN	12	EA		1					*	183A	6
					.CYLINDERS AND PISTONS SEE.. FIG.190 FOR BREAKDOWN	12			9						183A	7
					.VALVE MECHANISM SEE FIG.... 190A FOR BREAKDOWN	12			1						183A	
					.DEFLECTOR ASSEMBLY,..... CYLINDER EXHAUST AND INTAKE SEE FIG.191 FOR BREAKDOWN	12			1						183A	8
			2810-217-3721	428590N1 <66640>	.DEFLECTOR ASSEMBLY..... RPL-BY 2810-346-1435	12									183A	
P	D		2810-346-1435	428590N3 <66640>	.DEFLECTOR ASSEMBLY,..... INTERCYLINDER AIR RPLS-- 2810-217-3721, 2810-217-3726 SEE FIG.192 FOR BREAKDOWN	12	EA		7	*	*	2		*	183A	
			2810-217-3722	428590N2 <66640>	DEFLECTOR ASSEMBLY..... RPL-BY 2810-602-6537	12									183A	
P	D	R	2810-602-6537	428590N4 <66640>	.DEFLECTOR ASSEMBLY,..... INTERCYLINDER RPLS-- 2810-217-3722 SEE FIG. 193 FOR BREAKDOWN	12	EA		1	*	*	*		*	183A	
			2810-217-3728	429838 <66640>	.CHANNEL ASSEMBLY-COWL SEAL.. RPL-BY 2810-018-4007	12									183A	

(1) SOURCE, MAINT AND REC CODE (a) SOURCE CODE	(b) MAINT LEVEL	(c) REC CODE	(2) FEDERAL STOCK NUMBER	REFERENCE NUMBER	(3) DESCRIPTION	MODELS USABLE ON CH-34C	(4) UNIT OF ISSUE	(5) QTY INC IN UNIT PACK	(6) QTY INC IN UNIT	(7) 30-DAY DS/GS MAINT ALW (a) 1-20	(b) 21 50	(c) 51-100	(8) 1-YR ALW PER 100 EQUIP CNTGCY	(9) DEPOT MAINT ALW PER 100 EQUIP	(10) ILLUSTRATION (a) FIG NO	(b) ITEM NO
P	O		2810-018-4007	433621 <66640>	.CHANNEL ASSEMBLY-COWL SEAL.. RPLS-- 2810-217-3728 SEE FIG.194 FOR BREAKDOWN	12	EA		9	2	2	4		*	183A	
					.INTERCYLINDER AIR..... DEFLECTOR SEE FIG.195 FOR BREAKDOWN	12			1						183A	
P	O	R	2810-215-9687	430049 <66640>	.DEFLECTOR ASSEMBLY,SUMP..... LEFT HAND SEE FIG.196 FOR BREAKDOWN	12	EA		1	*	*	*		*	183A	
P	O	R	2810-215-9686	430048 <66640>	.DEFLECTOR ASSEMBLY,SUMP..... RIGHT HAND SEE FIG.197 FOR BREAKDOWN	12	EA		1	*	*	2		*	183A	
					.SUPERCHARGER FRONT HOUSING.. AND INTAKE PIPES SEE FIG. 198 FOR BREAKDOWN	12			1						183A	9
					.IMPELLER AND IMPELLER..... SHAFT SEE FIG.199 FOR BREAKDOWN	12			1						183A	10
			2810-076-9371	431779 <66640>	.HOUSING,MACHINING..... RPL-BY 2810-997-4732	12									183A	
			2810-793-2846	433849 <66640>	.HOUSING,MACHINING..... RPL-BY 2810-997-4732	12									183A	
P	O		2810-997-4732	433921 <66640>	.HOUSING,MACHINING..... SEE FIG.200 FOR BREAKDOWN	12	EA		1					*	183A	11
					.SHAFT,ACCESSORY DRIVE AND... STARTER SEE FIG.201 FOR BREAKDOWN	12			1						183A	12
					.IMPELLER DRIVE FLUID..... COUPLING SEE FIG.202A FOR BREAKDOWN	12			1						183A	13
					.MAGNETO DRIVE SEE FIG.203.. FOR BREAKDOWN	12			1						183A	14
					.FLUID POWER COUPLING DRIVE.. SEE FIG.204 FOR BREAKDOWN	12			1						183A	15
					.OIL PUMP AND FUEL PUMP..... DRIVES SEE FIG.205 FOR BREAKDOWN	12			1						183A	16
			2810-097-4293	430064 <66640>	.COVER AND STUDDING ASSEMBLY. RPL-BY 2810-796-5093	12									183A	
P	D		2810-796-5093	432908 <66640>	.COVER,MACHINE ASSEMBLY-..... SUPERCHARGER,REAR RPLS--2810-097-4293 SEE FIG.206 FOR BREAKDOWN	12	EA		1					*	183A	17
					.FRONT OIL SUMP AND PUMP..... SEE FIG.207 FOR BREAKDOWN	12			1						183A	18
					.REAR OIL PUMP SEE FIG.208.. FOR BREAKDOWN	12			1						183A	19
P	F		2810-512-9927	429208 <66640>	.TUBE ASSEMBLY,SUMP..... EXTERNAL SEE FIG.209 FOR BREAKDOWN	12	EA		1	*	*	*		*	183A	20
					.ROCKER BOX DRAIN SYSTEM..... SEE FIG.210 FOR BREAKDOWN	12			1						183A	

(1) SOURCE, MAINT AND REC CODE (a) SOURCE CODE	(b) MAINT LEVEL	(c) REC CODE	(2) FEDERAL STOCK NUMBER	REFERENCE NUMBER	(3) DESCRIPTION	MODELS USABLE ON CH-34C	(4) UNIT OF ISSUE	(5) QTY INC IN UNIT PACK	(6) QTY INC IN UNIT	(7) 30-DAY DS GS MAINT ALW (a) 1-20	(b) 21-50	(c) 51-100	(8) 1-YR ALW PER 100 EQUIP CNTGCY	(9) DEPOT MAINT ALW PER 100 EQUIP	(10) ILLUSTRATION (a) FIG NO	(b) ITEM NO
			2810-987-5108	149035 <66640>	.STRAINER ASSEMBLY..... RPL-BY-- 2945-790-3902 SEE FIG.211 FOR BREAKDOWN	12	EA								183A	
P	O		2945-790-3902	149217 <66640>	.STRAINER ASSEMBLY..... RPLS-- 2810-987-5108 SEE FIG.211 FOR BREAKDOWN	12	EA		1	*	2	2	26	*	183A	
		R	2925-294-2596	10-56900-4 <77820>	.MAGNETO,IGNITION RPL-BY.... 2925-065-7746 SEE FIG.212A FOR BREAKDOWN	12									183A	
P	O	R	2925-065-7746	10-94500-2 <77820>	.MAGNETO,IGNITION RPLS--.... 2925-294-2596	12	EA		1	2	2	3	38	*	183A	21
					ATTACHING PARTS											
			5310-088-0553	MS21044N5 <96906>	.NUT,SELF-LOCKING,HEXAGON....	12	HD		4	*	*	*		*	183A	
			5310-950-3180	5310H34-003 <81996>	.WASHER,FLAT..... RPL-BY 5310-148-4687	12									183A	
P	O		5310-148-4687	34D4 <66640>	.WASHER,FLAT..... RPLS--5310-950-3180	12	EA		4	*	*	*		*	183A	
					---*---											
P	H		2925-732-8906	10-125921 <77820>	..ADAPTER,MAGNETO.....	12	EA		1	*	*	*		*	183A	
					.IGNITION CABLE,COILS AND.... SPARK PLUGS SEE FIG.213 FOR BREAKDOWN	12			1						183A	22
					.CARBURETOR AND AIR INLET.... SCREEN SEE FIG.214 FOR BREAKDOWN	12			1						183A	23
AO	O			430058 <66640>	.PRIMING SYSTEM ASSEMBLY..... SEE FIG.215 FOR BREAKDOWN	12	EA		1						183A	
					CRANKCASE,FRONT SECTION..... SEE FIG.183A FOR NHA	12			1						184	
P	F		2810-306-6113	63997 <66640>	.COVER,THRUST BEARING SHAFT..	12	EA		1	*	*	*		*	184	1
P	F		2810-217-3690	170051 <66640>	.FLANGE,CRANKCASE.....	12	EA		1	*	*	*		*	184	2
					ATTACHING PARTS											
P	F		5305-298-2761	468D6 <66640>	.SCREW,CAP-HEXAGON HEAD.....	12	EA		10	*	2	2		*	184	3
			5310-184-8974	MS9320-12 <96906>	.WASHER,FLAT.....	12	EA		10	*	*	*		*	184	4
					---*---											
			5330-290-9390	AN123923 <88044>	.PACKING,PREFORMED.....	12	EA		1	*	*	*		*	184	5
P	F		5340-200-2545	RR575 <80756>	.RING,RETAINING.....	12	EA		1	*	*	*		*	184	6
			2810-808-2976	37875 <66640>	.SEAL,PLAIN ENCASED..... RPL-BY 5330-202-5047	12									184	
P	F		5330-202-5047	244D27 <66640>	.SEAL,PLAIN ENCASED..... RPLS-- 2810-808-2976	12	EA		1	2	3	6		*	184	7
P	D		2810-215-9632	171756 <66640>	.RING,PROPELLER SHAFT.....	12	EA		1					*	184	8
					ATTACHING PARTS											
			5306-638-9218	AN101224 <88044>	.BOLT,MACHINE.....	12	EA		3					*	184	9
			5310-194-0636	MS9320-11 <96906>	.WASHER,FLAT.....	12	EA		3					*	184	10
					---*---											

(1) SOURCE, MAINT AND REC CODE (a) SOURCE CODE	(b) MAINT LEVEL	(c) REC CODE	(2) FEDERAL STOCK NUMBER	REFERENCE NUMBER	(3) DESCRIPTION	MODELS USABLE ON CH-34C	(4) UNIT OF ISSUE	(5) QTY INC IN UNIT PACK	(6) QTY INC IN UNIT	(7) 30-DAY DS/GS MAINT ALW (a) 1-20	(b) 21-50	(c) 51-100	(8) 1-YR ALW PER 100 EQUIP CNTGCY	(9) DEPOT MAINT ALW PER 100 EQUIP	(10) ILLUSTRATION (a) FIG NO	(b) ITEM NO
			4730-172-0049	MS15006-1 <96906>	.FITTING,LUBRICATION.....	12	EA		1	*	*	*		*	184	12
P	F		4730-274-3144	64602N1 <66640>	.FLANGE,PIPE.....	12	EA		1	*	*	*		*	184	13
					ATTACHING PARTS											
			5310-088-0553	MS21044N5 <96906>	.NUT,SELF-LOCKING,HEXAGON....	12	HD		2	*	*	*		*	184	14
			5310-194-0637	MS9320-10 <96906>	.WASHER,FLAT.....	12	EA		2	*	*	*		*	184	15
					---*---											
			4730-188-3516	MS20913-6 <96906>	.PLUG,PIPE.....	12	EA		1	*	*	*		*	184	16
P	F		2810-310-9074	64603 <66640>	.GASKET.....	12	EA		1	*	2	2		*	184	17
P	D		5330-479-0177	208304 <66640>	.PACKING,PREFORMED.....	12	EA		1					*	184	18
P	D		2810-479-1387	69222 <66640>	.RING,PACKING.....	12	EA		1					*	184	19
			2810-569-2864	430872 <66640>	.CRANKCASE,MACHINING AND.....	12									184	
					STUDDING RPL-BY											
					2810-076-2699											
P	D		2810-076-2699	433705 <66640>	.CRANKCASE,MACHINING AND.....	12	EA		1					*	184	20
					STUDDING RPLS--											
					2810-217-3733,											
					2810-569-2864											
					ATTACHING PARTS											
P	D		5307-297-3051	171732 <66640>	.STUD,SHOULDERED.....	12	EA		8					*	184	21
			5306-638-1472	AN103221 <88044>	.BOLT,MACHINE.....	12	EA		3					*	184	22
P	D		5307-208-5788	204508I <66640>	.STUD,SHOULDERED AND STEPPED.	12	EA		5					*	184	23
			5310-184-8973	MS9320-13 <96906>	.WASHER,FLAT.....	12	EA		16					*	184	
P	D		5310-984-2309	34D283 <66640>	.WASHER,FLAT.....	12	EA		16					*	184	24
					---*---											
			4730-289-3073	MS9015-02 <96906>	..PLUG,MACHINE THREAD.....	12	EA		12					*	184	25
			5330-199-5873	MS35769-5 <96906>	..GASKET.....	12	LL		12					*	184	26
			4730-288-8054	AN933B1 <88044>	..PLUG,PIPE.....	12	EA		1					*	184	27
			4730-479-0482	36D7 <66640>	..PLUG,PIPE.....	12									184	
					RPL-BY 4730-554-8139											
			4730-554-8139	AN93302 <88044>	..PLUG,PIPE.....	12	EA		8					*	184	28
P	D		5305-208-4628	312D3 <66640>	..SCREW,MACHINE.....	12	EA		3					*	184	29
P	D		5315-148-8948	13D14 <66640>	..PIN,STRAIGHT,HEADLESS.....	12	EA		18					*	184	32
P	D		4730-203-0373	5042H3 <66640>	..ADAPTER BUSHING-.....	12	EA		AR					*	184	33
					0.003 IN.OVERSIZE OD											
P	D		2810-479-1105	5042S3 <66640>	..BUSHING,OPEN SCREW-0.007...	12	EA		AR					*	184	
					IN.OVERSIZE ON OD											
P	D		2810-386-4442	5042J3 <66640>	..BUSHING,OIL SUMP TO.....	12	EA		AR					*	184	
					SUPERCHARGER-0.012 IN.											
					OVERSIZE ON OD											
			2810-662-2468	171707 <66640>	..BUSHING,SLEEVE RPL-BY.....	12									184	
					2810-608-6814,											
					2810-608-6815,&											
					2810-608-6816											
P	D		2810-608-6814	171707Y1 <66640>	..BUSHING,SLEEVE-0.005 IN....	12	EA		AR					*	184	34
					OVERSIZE ON OD											
P	D		2810-608-6815	171707Y2 <66640>	..BUSHING,SLEEVE-0.010 IN....	12	EA		AR					*	184	
					OVERSIZE ON OD											
P	D		2810-608-6816	171707Y3 <66640>	..BUSHING,SLEEVE-0.040 IN....	12	EA		AR					*	184	
					OVERSIZE ON OD											
P	D		2810-522-4831	4015H1 <66640>	..BUSHING,OPEN SCREW-0.003...	12	EA		AR					*	184	35
					IN.OVERSIZE ON OD											
P	D		4730-289-4981	4015S1 <66640>	..ADAPTER BUSHING.....	12	EA		AR					*	184	

(1) SOURCE, MAINT AND REC CODE (a) SOURCE CODE	(b) MAINT LEVEL	(c) REC CODE	(2) FEDERAL STOCK NUMBER	REFERENCE NUMBER	(3) DESCRIPTION	MODELS USABLE ON CH-34C	(4) UNIT OF ISSUE	(5) QTY INC IN UNIT PACK	(6) QTY INC IN UNIT	(7) 30-DAY DS GS MAINT ALW (a) 1-20	(b) 21-50	(c) 51-100	(8) 1-YR ALW PER 100 EQUIP CNTGCY	(9) DEPOT MAINT ALW PER 100 EQUIP	(10) ILLUSTRATION (a) FIG NO	(b) ITEM NO
					CONTINUED										184	
					0.007 IN.OVERSIZE ON OD											
P	D		4730-512-9848	4015J1 <66640>	..BUSHING,MACHINE-0.012 IN...	12	EA		AR					*	184	
					OVERSIZE ON OD											
P	D		2810-097-4285	170041 <66640>	..LINER,PROPELLER SHAFT.....	12	EA		1					*	184	36
			5315-877-8914	MS9164-328 <96906>	..PIN,STRAIGHT,HEADLESS.....	12	EA		AR					*	184	37
					0.002 IN.OVERSIZE ON OD											
			5315-663-0597	70S14 <66640>	..PIN,STRAIGHT,HEADLESS.....	12									184	
					RPL-BY 5315-877-8915											
			5315-877-8915	MS9164-368 <96906>	..PIN,STRAIGHT,HEADLESS.....	12	EA		AR					*	184	
					0.010 IN.OVERSIZE ON OD											
			5315-877-7542	MS9164-388 <96906>	..PIN,STRAIGHT,HEADLESS.....	12	EA		AR					*	184	
					0.015 IN.OVERSIZE ON OD											
			5307-619-1338	118D7 <66640>	..STUD,PLAIN.....	12									184	
					RPL-BY 5307-262-6584											
			5307-262-6584	AN125988 <88044>	..STUD,PLAIN.....	12	EA		36	*	*	*		*	184	38
					RPLS-- 5307-619-1338											
			5307-264-2427	AN125989 <88044>	..STUD,PLAIN-0.003 IN.....	12	EA		AR	*	*	*		*	184	
					OVERSIZE ON OD											
			5307-264-2421	AN125990 <88044>	..STUD,PLAIN-0.006 IN.....	12	EA		AR	*	*	*		*	184	
					OVERSIZE ON OD											
			5307-206-9706	AN125991 <88044>	..STUD,PLAIN-0.009 IN.....	12	EA		AR	*	*	*		*	184	
					OVERSIZE ON OD											
			5307-639-5025	118J7 <66640>	..STUD,PLAIN.....	12									184	
					RPL-BY 5307-637-7224											
			5307-637-7224	AN125992 <88044>	..STUD,PLAIN-0.012 IN.....	12	EA		AR	*	*	*		*	184	
					OVERSIZE ON OD											
					RPLS-- 5307-639-5025											
P	F		5307-166-1118	2134H170 <66640>	..STUD,RECESSED AND STEPPED..	12	EA		AR	*	*	*		*	184	39
					0.003 IN.OVERSIZE ON OD											
P	F		5307-166-1119	2134S170 <66640>	..STUD,RECESSED AND STEPPED..	12	EA		AR	*	*	*		*	184	
					0.007 IN.OVERSIZE ON OD											
P	F		5307-149-9538	2134J170 <66640>	..STUD,RECESSED AND STEPPED..	12	EA		AR	*	*	*		*	184	
					0.012 IN.OVERSIZE ON OD											
			5307-149-9603	2138J150 <66640>	..STUD,STEPPED.....	12									184	
					RPL-BY 5307-638-6990											
P	F		5307-638-6990	396J1 <66640>	..STUD,RECESSED AND STEPPED..	12	EA		AR	*	*	*		*	184	40
					0.003 IN.OVERSIZE ON OD											
					RPLS-- 5307-149-9603											
P	F		5307-207-6244	2138S155 <66640>	..STUD,RECESSED AND STEPPED..	12	EA		AR	*	*	*		*	184	
					0.007 IN.OVERSIZE ON OD											
P	F		5307-576-6663	2138J155 <66640>	..STUD,RECESSED AND STEPPED..	12	EA		AR	*	*	*		*	184	
					0.012 IN.OVERSIZE ON OD											
P	F		5307-479-0022	2029H51 <66640>	..STUD,PLAIN-0.003 IN.....	12	EA		AR	*	*	*		*	184	41
					OVERSIZE ON OD											
P	F		5307-033-0387	2029S51 <66640>	..STUD,PLAIN-0.007 IN.....	12	EA		AR	*	*	*		*	184	
					OVERSIZE ON OD											
P	F		5307-087-1697	2029J51 <66640>	..STUD,PLAIN-0.012 IN.....	12	EA		AR	*	*	*		*	184	
					OVERSIZE ON OD											
			4730-277-6339	AN933-1 <88044>	..PLUG,PIPE.....	12	EA		2					*	184	42
			5315-241-2921	AN122693 <88044>	..PIN,STRAIGHT,HEADLESS.....	12	EA		2					*	184	43
P	D		5315-148-8950	13H35 <66640>	..PIN,STRAIGHT,HEADLESS.....	12	EA		AR					*	184	

(1) SOURCE, MAINT AND REC CODE (a) SOURCE CODE	(b) MAINT LEVEL	(c) RLC CODE	(2) FEDERAL STOCK NUMBER	REFERENCE NUMBER	(3) DESCRIPTION	MODELS USABLE ON CH-34C	(4) UNIT OF ISSUE	(5) QTY INC IN UNIT PACK	(6) QTY INC IN UNIT	(7) 30-DAY DS/GS MAINT ALW (a) 1-20	(b) 21-50	(c) 51-100	(8) 1-YR ALW PER 100 EQUIP CNTGCY	(9) DEPOT MAINT ALW PER 100 EQUIP	(10) ILLUSTRATION (a) FIG NO	(b) ITEM NO
					CONTINUED										184	
					0.002 IN.OVERSIZE ON OD											
P	D		5315-148-0795	13S35 <66640>	..PIN,STRAIGHT,HEADLESS.....	12	EA		AR					*	184	
					0.010 IN.OVERSIZE ON OD											
P	D		5315-282-6867	13J35 <66640>	..PIN,STRAIGHT,HEADLESS.....	12	EA		AR					*	184	
					0.015 IN.OVERSIZE ON OD											
P	D		2810-092-1749	171711 <66640>	..NOZZLE,THRUST BEARING.....	12	EA		1					*	184	44
P	F		5310-984-2773	34D284 <66640>	..WASHER.....	12	EA		AR	*	*	*		640	184	
P	F		5310-984-2310	34D285 <66640>	..WASHER.....	12	EA		AR	*	*	*		640	184	
			5340-281-6655	MS16624-156 <96906>	..RING,RETAINING.....	12	EA		1					*	184	
					OIL SEPARATOR SPINNER DRIVE..	12			1						185	
					SEE FIG.183A FOR NHA											
			5310-088-0553	MS21044N5 <96906>	.NUT,SELF-LOCKING,HEXAGON....	12	HD		4	*	*	*		*	185	1
			5310-194-0636	MS9320-11 <96906>	.WASHER,FLAT.....	12	EA		4	*	*	*		*	185	2
P	F		2810-215-9631	171734 <66640>	.COVER,BREATHER SUBSTITUTE...	12	EA		1	*	*	*		*	185	2A
			5305-984-7343	MS35191-276 <96906>	.SCREW,MACHINE.....	12	HD		2	*	*	*		*	185	3
			2810-217-3704	171736 <66640>	.PLATE,AIR OIL SEPARATOR.....	12									185	
					RPL-BY 2810-569-2845											
P	F		2810-569-2845	145587 <66640>	.PLATE,AIR OIL SEPARATOR.....	12	EA		1	*	*	*		*	185	4
					RPLS-- 2810-217-3704											
P	F		5330-641-3260	26070 <73680>	.SEAL,PLAIN ENCASED.....	12	EA		1	*	*	2		*	185	5
			2810-330-6494	171735 <66640>	.GASKET,OIL SEPARATOR.....	12									185	
					RPL-BY 2810-347-5955											
P	F		2810-347-5955	145588 <66640>	.GASKET,OIL SEPARATOR.....	12	EA		1	*	*	2		*	185	6
					RPLS-- 2810-330-6494											
			5340-803-7304	MS16624-1156 <96906>	.RING,RETAINING.....	12	EA		1	*	*	*		*	185	7
P	D		2810-286-9298	171758 <66640>	.SPACER,RING.....	12	EA		1					*	185	8
P	D		2810-320-2132	171706 <66640>	.GEAR,BEVEL.....	12	EA		1					*	185	9
P	D		2810-097-4289	171705 <66640>	.BREATHER,AIR OIL SEPARATOR..	12	EA		1					*	185	10
					ATTACHING PARTS											
			5306-282-6540	AN102926 <88044>	.BOLT,MACHINE.....	12	EA		6					*	185	11
			5310-194-0637	MS9320-10 <96906>	.WASHER,FLAT.....	12	EA		6					*	185	12
					---*---											
P	D		2810-320-2086	133068 <66640>	.GEAR,BEVEL.....	12	EA		1					*	185	13
					ATTACHING PARTS											
P	D		5306-147-1898	90031 <66640>	.BOLT,MACHINE.....	12	EA		6					*	185	14
					---*---											
					PROPELLER SHAFT SEE FIG.....	12			1						186	
					183A FOR NHA											
P	F		2810-306-6162	68533 <66640>	.LOCKPLATE,PROPELLER SHAFT...	12	EA		1	*	*	*		*	186	1

(1) SOURCE, MAINT AND REC CODE (a) SOURCE CODE	(b) MAINT LEVEL	(c) REC CODE	(2) FEDERAL STOCK NUMBER	REFERENCE NUMBER	(3) DESCRIPTION	MODELS USABLE ON CH-34C	(4) UNIT OF ISSUE	(5) QTY INC IN UNIT PACK	(6) QTY INC IN UNIT	(7) 30-DAY DS/GS MAINT ALW (a) 1-20	(b) 21-50	(c) 51-100	(8) 1-YR ALW PER 100 EQUIP CNTGCY	(9) DEPOT MAINT ALW PER 100 EQUIP	(10) ILLUSTRATION (a) FIG NO	(b) ITEM NO
					CONTINUED										186	1
					ATTACHING PARTS											
			5305-150-9213	AN502-10-6 <88044>	.SCREW,MACHINE.....	12	HD		3	*	*	*		*	186	2
			5310-641-9141	27D30 <66640>	.WASHER,FLAT.....	12									186	3
					RPL-BY 5310-530-4114											
P	F		5310-530-4114	P24532 <06848>	.WASHER,FLAT.....	12	EA		3	*	*	*		*	186	3
					RPLS-- 5310-641-9141											
					ATTACHING PARTS											
P	F		2810-306-5896	28842 <66640>	.RETAINER,PROPELLER SHAFT....	12	EA		1	*	*	*		*	186	4
P	F		2810-217-3702	171729 <66640>	.COVER,PROPELLER SHAFT.....	12	EA		1	*	*	*		*	186	5
P	F		5340-147-6532	27D156 <66640>	.SPACER,RING.....	12	EA		1	*	*	*		*	186	6
P	F		5310-527-5097	170043 <66640>	.NUT,PLAIN,ROUND.....	12	EA		1	*	*	*		*	186	7
P	F		2810-097-4284	170037 <66640>	.SLEEVE,PROPELLER SHAFT.....	12	EA		1	*	2	2		*	186	8
			3110-277-0317	21D294 <66640>	.BEARING,BALL,ANNULAR.....	12									186	
					RPL-BY 3110-794-7284											
P	D	U	3110-794-7284	21D333 <66640>	.BEARING,BALL,ANNULAR.....	12	EA		1					53	186	9
					RPLS-- 3110-277-0317											
P	D		2810-217-3703	171730 <66640>	.SPACER,PROPELLER SHAFT.....	12	EA		1					*	186	10
			2810-215-9683	430041 <66640>	.SHAFT AND BUSHING.....	12									186	
					RPL-BY 2810-320-2140											
P	D		2810-320-2140	430041N2 <66640>	.SHAFT AND BUSHING ASSEMBLY..	12	EA		1					*	186	11
					RPLS-- 2810-215-9683											
			5315-241-2920	AN122705 <88044>	..PIN,STRAIGHT,HEADLESS.....	12	EA		1					*	186	12
			5315-148-8960	20H12 <66640>	..PIN,STRAIGHT,HEADLESS.....	12									186	
					RPL-BY 5315-857-1653											
			5315-857-1653	MS9164-086 <96906>	..PIN,STRAIGHT,HEADLESS.....	12	EA		AR					*	186	
					0.002 IN.OVERSIZE ON OD											
P	D		5315-148-8957	20S12 <66640>	..PIN,STRAIGHT,HEADLESS.....	12	EA		AR					*	186	
					0.010 IN.OVERSIZE ON OD											
P	D		5315-148-8958	20J12 <66640>	..PIN,STRAIGHT,HEADLESS.....	12	EA		AR					*	186	
					0.015 IN.OVERSIZE ON OD											
P	D		2810-662-2412	171728 <66640>	..BUSHING,SLEEVE.....	12	EA		1					*	186	13
P	D		2810-343-3858	138964 <66640>	..BUSHING,PROPELLER SHAFT....	12	EA		1					*	186	14
			5340-664-2336	AN5012-50 <88044>	..CAP,PROTECTIVE,DUST.....	12	EA		1	*	*	*		*	186	
					PROPELLER SHAFT COUPLING.....	12			1						187	
					AND CAM MECHANISM SEE FIG.											
					183A FOR NHA											
			5315-234-1856	MS24665-155 <96906>	.PIN,COTTER.....	12	HD		1					*	187	1
			5305-147-2627	20750D7 <66640>	.SETSCREW.....	12									187	
					RPL-BY 5305-208-2595											
P	D		5305-208-2595	136D20 <66640>	.SETSCREW.....	12	EA		1					*	187	2
					RPLS-- 5305-147-2627											
P	D		5310-534-9780	28778 <66640>	.NUT,GEAR,REDUCTION DRIVE....	12	EA		1					*	187	3
P	D		2810-326-6625	120315N2 <66640>	.COUPLING,PROPELLER SHAFT....	12	EA		1					*	187	4
P	D		1610-097-4286	170947 <66640>	.SPACER,ENGINE.....	12	EA		1					*	187	5
P	D		2810-165-7047	113255 <66640>	.RING,CRANKSHAFT OIL SEAL....	12	EA		2					*	187	6

(1) SOURCE, MAINT AND REC CODE (a) SOURCE CODE	(b) MAINT LEVEL	(c) REC CODE	(2) FEDERAL STOCK NUMBER	REFERENCE NUMBER	(3) DESCRIPTION	MODELS USABLE ON CH-34C	(4) UNIT OF MEAS	(5) QTY INC IN UNIT PACK	(6) QTY INC IN UNIT	(7) 30-DAY DS/GS MAINT ALW (a) 1-20	(b) 21-50	(c) 51-100	(8) 1-YR ALW PER 100 EQUIP CNTGCY	(9) DEPOT MAINT ALW PER 100 EQUIP	(10) ILLUSTRATION (a) FIG NO	(b) ITEM NO
P	D		2810-512-9528	113255Y1 <66640>	.RING,OIL SEAL DRILL-0.005... IN.OVERSIZE ON OD	12	EA		AR					*	187	
P	D		2810-512-9529	113255Y2 <66640>	.RING,OIL SEAL DRILL-0.010... IN.OVERSIZE ON OD	12	EA		AR					*	187	
			2810-479-1062	427585 <66640>	.SUPPORT ASSEMBLY..... RPL-BY 2810-446-8208	12	EA								187	
P	D		2810-446-8208	433647 <66640>	.MACHINE ASSEMBLY..... RPLS-- 2810-479-1062	12	EA		1					*	187	7
					ATTACHING PARTS											
			5306-637-9703	AN103108 <88044>	.BOLT,MACHINE.....	12	EA		7					*	187	8
P	D		5310-147-6547	34D72 <66640>	.WASHER,FLAT.....	12	EA		8					*	187	9
					---*---											
			2810-344-1389	171514 <66640>	..BEARING,SLEEVE..... RPL-BY 3120-478-9500	12									187	
P	D		3120-478-9500	129181 <66640>	..BEARING,SLEEVE..... RPLS-- 2810-344-1389	12	EA		2					*	187	10
			2810-344-1392	171514Y1 <66640>	..BEARING,SLEEVE..... RPL-BY 2810-505-8608	12									187	
P	D		2810-505-8608	129181Y1 <66640>	..BEARING,SLEEVE-0.005 IN.... OVERSIZE ON OD RPLS-- 2810-344-1392	12	EA		AR					*	187	
			2810-344-1393	171514Y2 <66640>	..BEARING,SLEEVE..... RPL-BY 2810-505-8609	12									187	
P	D		2810-505-8609	129181Y2 <66640>	..BEARING,SLEEVE-0.010 IN.... OVERSIZE ON OD RPLS-- 2810-344-1393	12	EA		AR					*	187	
			2810-662-2513	171515 <66640>	..BUSHING,CAM DRIVE..... RPL-BY 2810-478-9127	12									187	
P	D		2810-478-9127	116420 <66640>	..BUSHING,CAM DRIVE RPLS--.. 2810-662-2513	12	EA		2					*	187	11
P	D		2810-662-2449	116420Y1 <66640>	..BEARING,SLEEVE-0.005 IN.... OVERSIZE ON OD	12	EA		AR					*	187	
P	D		2810-662-1792	116420Y2 <66640>	..BEARING,SLEEVE-0.010 IN.... OVERSIZE ON OD	12	EA		AR					*	187	
P	D		2810-478-9905	137626 <66640>	..BEARING,CAM.....	12	EA		1					*	187	12
			5315-241-2920	AN122705 <88044>	..PIN,STRAIGHT,HEADLESS.....	12	EA		2					*	187	13
			5315-857-1653	MS9164-086 <96906>	..PIN,STRAIGHT,HEADLESS.....	12	EA		AR					*	187	
P	D		5315-148-8957	20S12 <66640>	..PIN,STRAIGHT,HEADLESS..... 0.010 IN.OVERSIZE ON OD	12	EA		AR					*	187	
P	D		5315-148-8958	20J12 <66640>	..PIN,STRAIGHT,HEADLESS..... 0.015 IN.OVERSIZE ON OD	12	EA		AR					*	187	
P	D		2810-335-4809	170467 <66640>	.RETAINER,CAM..... ATTACHING PARTS	12	EA		2					*	187	14
			5306-180-3384	AN103809 <88044>	.BOLT,MACHINE.....	12	EA		14					*	187	15
			5310-194-0637	MS9320-10 <96906>	.WASHER,FLAT.....	12	EA		14					*	187	16
					---*---											
P	D	R	2810-478-9783	134899 <66640>	.CAM,INTAKE AND EXHAUST.....	12	EA		1					*	187	17
P	D		2810-320-2111	138800 <66640>	.GEAR,SPUR.....	12	EA		1					*	187	18
P	D		2810-320-2101	137339 <66640>	.GEAR,SPUR.....	12	EA		1					*	187	19
			5315-234-1864	MS24665-302 <96906>	.PIN,COTTER.....	12	HD		1					*	187	20
P	D		5310-215-9615	124D223 <66640>	.NUT,HEXAGON,SPECIAL.....	12	EA		1					*	187	21
P	D		5306-207-6437	137340 <66640>	.BOLT,MACHINE.....	12	EA		1					*	187	22

(1) SOURCE, MAINT AND REC CODE (a) SOURCE CODE	(b) MAINT LEVEL	(c) REC LEVEL CODE	(2) FEDERAL STOCK NUMBER	REFERENCE NUMBER	(3) DESCRIPTION	MODELS USABLE ON CH-34C	(4) UNIT OF ISSUE	(5) QTY INC IN UNIT PACK	(6) QTY INC IN UNIT	(7) 30-DAY DS GS MAINT ALW (a) 1-20	(b) 21-50	(c) 51-100	(8) 1-YR ALWPER 100 EQUIP CNTGCY	(9) DEPOT MAINT ALWPER 100 EQUIP	(10) ILLUSTRATION (a) FIG NO	(b) ITEM NO
P	D		5315-198-6112	5068D1 <66640>	.PIN,TAPERED,PLAIN.....	12	EA		2					*	187	23
P	D		5310-303-1358	139300 <66640>	.NUT,BALANCEWEIGHT DRIVE.....	12	EA		2					*	187	24
P	D		5306-478-9788	135014 <66640>	.BOLT.....	12	EA		2					*	187	25
P	D		2810-478-9412	127533 <66640>	.GEAR,BALANCE WEIGHT DRIVE...	12	EA		2					*	187	26
P	D		2810-478-9418	127552 <66640>	.BUSHING.....	12	EA		6					*	187	27
			2810-293-5563	127552Y1 <66640>	.BUSHING..... RPL-BY 2810-992-6497	12									187	
P	D		2810-992-6497	127552Y2 <66640>	.BUSHING-0.010 IN.UNDERSIZE.. ON ID RPLS-- 2810-293-5563	12	EA		AR					*	187	
				127552Y6 <66640>	.BUSHING-0.005 IN.OVERSIZE... ON OD & 0.015 IN.UNDERSIZE ON ID	12	EA		AR						187	
P	D		2810-076-2698	127552Y14 <66640>	.BUSHING-0.010 IN.OVERSIZE... ON OD	12	EA		AR					*	187	
P	D		2810-992-6507	127552Y8 <66640>	.BUSHING-0.010 IN.OVERSIZE... ON OD & UNDERSIZE ON ID	12	EA		AR					*	187	
P	D		5315-198-6112	5068D1 <66640>	.PIN,TAPERED,PLAIN.....	12	EA		4					*	187	28
P	D		2810-393-7638	139301 <66640>	.NUT,BALANCEWEIGHT AND..... RETAINING BOLT	12	EA		4					*	187	29
P	D		5306-302-8637	138912 <66640>	.BOLT,WEIGHT RETAINER.....	12	EA		4					*	187	30
P	D		2810-609-0375	138912Y1 <66640>	.BOLT-0.005 IN.UNDERSIZE ON.. ID	12	EA		AR					*	187	
P	D		2810-609-0376	138912Y2 <66640>	.BOLT-0.010 IN.UNDERSIZE ON.. ID	12	EA		AR					*	187	
P	D		2810-609-0377	138912Y3 <66640>	.BOLT-0.015 IN.UNDERSIZE ON.. ID	12	EA		AR					*	187	
			2810-478-9785	134909 <66640>	.BALANCE WEIGHT..... RPL-BY 2810-672-2006	12									187	
P	D		2810-672-2006	146763 <66640>	.BALANCE WEIGHT RPLS--..... 2810-478-9785, 2810-594-1509	12	EA		4					*	187	31
P	D		2810-200-1635	116338 <66640>	.GEAR,SPUR.....	12	EA		1					*	187	33
P	D		2810-310-2865	116268 <66640>	.GEAR,OIL SUMP SCAVENGE.....	12	EA		1					*	187	34
			5315-234-1864	MS24665-302 <96906>	.PIN,COTTER.....	12	HD		1					*	187	35
P	D		5310-478-9293	124D107 <66640>	.NUT,EXTENDED WASHER,HEXAGON.	12	EA		1					*	187	36
P	D		5305-995-1332	116417 <66640>	.SCREW,MACHINE.....	12	EA		1					*	187	37
P	D		2810-512-9874	417972 <66640>	.SUPPORT AND BUSHING..... ASSEMBLY ATTACHING PARTS	12	EA		1					*	187	38
			5306-637-9703	AN103108 <88044>	.BOLT,MACHINE.....	12	EA		1					*	187	39
P	D		5310-147-6547	34D72 <66640>	.WASHER,FLAT.....	12	EA		8					*	187	40
			5306-180-3369	AN102927 <88044>	.BOLT,MACHINE..... ---*---	12	EA		2					*	187	41
P	D		2810-478-9125	116343 <66640>	..BUSHING,OIL SUMP SCAVENGE..	12	EA		1					*	187	42
P	D		2810-512-9580	116334 <66640>	.GASKET,OIL SUMP SCAVENGE....	12	EA		1					*	187	43
			5340-806-4635	MS16624-28 <96906>	.RING,RETAINING.....	12	EA		1					*	187	44
P	D		5310-286-9297	171797 <66640>	.WASHER,FLAT.....	12	EA		1					*	187	45
P	D		2810-320-2134	171799 <66640>	.GEAR,BEVEL.....	12	EA		1					*	187	46

(1) SOURCE, MAINT AND REC CODE (a) SOURCE CODE	(b) MAINT LEVEL	(c) REC LEVEL CODE	(2) FEDERAL STOCK NUMBER	REFERENCE NUMBER	(3) DESCRIPTION	MODELS USABLE ON CH-34C	(4) UNIT OF ISSUE	(5) QTY INC IN UNIT PACK	(6) QTY INC IN UNIT	(7) 30-DAY DS GS MAINT ALW (a) 1-20	(b) 21-50	(c) 51-100	(8) 1-YR ALW PER 100 EQUIP CNTGCY	(9) DEPOT MAINT ALW PER 100 EQUIP	(10) ILLUSTRATION (a) FIG NO	(b) ITEM NO
					CRANKSHAFT AND CONNECTING.... RODS SEE FIG.183A FOR NHA	12			1						188	
			3110-289-6908	R319G6 <38443>	.BEARING,ROLLER,CYLINDRICAL.. RPL-BY 3110-932-5189	12									188	
			3110-277-0305	155D157 <38443>	.BEARING,ROLLER,CYLINDRICAL.. RPL-BY 3110-932-5189	12									188	
P	D	U	3110-932-5189	155D251 <66640>	.BEARING,ROLLER,CYLINDRICAL.. RPLS--3110-289-6908 & 3110-277-0305	12	EA		1					*	188	1
			5305-302-5466	2075D32 <66640>	.SETSCREW,AIRPLANE ENGINE.... OBS-BY 5305-981-3912	1									188	
P	D		5305-981-3912	148950 <66640>	.SETSCREW..... U/W 2810-980-7831 ONLY	12	EA		1					*	188	2
			2810-168-5115	2067D12 <66640>	.WASHER,SCREW TABLOCK..... RPL-BY 2810-980-7831	12									188	
P	D		2810-980-7831	2067D727 <66640>	.WASHER,SCREW TABLOCK..... RPLS-- 2810-168-5115 U/W 5305-981-3912 ONLY	12	EA		1					*	188	3
P	D		5310-544-2626	115171 <66640>	.NUT.....	12	EA		1					*	188	4
			3110-289-6908	R319G6 <38443>	.BEARING,ROLLER,CYLINDRICAL.. RPL-BY 3110-277-0305	12									188	
P	D	U	3110-932-5189	155D251 <66640>	.BEARING,ROLLER,CYLINDRICAL..	12	EA		1					*	188	
		U	3110-277-0304	155D156 <66640>	.BEARING,ROLLER,CYLINDRICAL.. RPL-BY 3110-898-9744	12									188	
P	D	U	3110-898-9744	155D250 <66640>	.BEARING,ROLLER,CYLINDRICAL.. RPLS-- 3110-277-0304	12	EA		1					100	188	5
			5315-236-8359	MS24665-370 <96906>	.PIN,COTTER.....	12	HD		1					*	188	6
		R	2810-886-1787	433551N2 <66640>	.CRANKSHAFT MACHINING AND.... BALANCING ASSEMBLY OBS-BY 2810-954-5863	12									188	
			2810-075-9163	433785N2 <66640>	.CRANKSHAFT MACHINING AND.... STUDDING ASSEMBLY OBS-BY 2810-954-5863	12									188	
P	D		2810-954-5863	434060N2 <66640>	.CRANKSHAFT MACHINING AND.... STUDDING ASSEMBLY OBSLTS 2810-075-9163, 2810-886-1787	12	EA		1					*	188	7
P	D		5305-335-6005	128262 <66640>	..SCREW.....	12	EA		1					*	188	8
P	D		5310-856-4144	34A164 <66640>	..WASHER,RECESSED..... 0.003 IN.OVERSIZE ON THK.	12	EA		AR					*	188	
P	D		3120-098-4772	34D164 <66640>	..WASHER,THRUST.....	12	EA		1					*	188	9
P	D		3120-286-4305	34H164 <66640>	..WASHER,THRUST-0.006 IN..... OVERSIZE ON THK	12	EA		AR					*	188	
P	D		3120-286-4306	34J164 <66640>	..WASHER,THRUST-0.009 IN..... OVERSIZE ON THK	12	EA		AR					*	188	
P	D		5310-529-7116	34R164 <66640>	..WASHER,THRUST-0.040 IN..... OVERSIZE ON THK	12	EA		AR					*	188	
P	D		5310-888-7356	34K164 <66640>	..WASHER,THRUST-0.003 IN..... OVERSIZE ON THK	12	EA		AR					*	188	
P	D		5310-856-4143	34L164 <66640>	..WASHER,THRUST-0.006 IN..... OVERSIZE ON THK	12	EA		AR					*	188	
P	D		5310-863-1170	34S164 <66640>	..WASHER,RECESSED.....	12	EA		AR					5	188	

(1) SOURCE, MAINT AND REC CODE (a) SOURCE CODE	(b) MAINT LEVEL	(c) REC CODE	(2) FEDERAL STOCK NUMBER	REFERENCE NUMBER	(3) DESCRIPTION	MODELS USABLE ON CH-34C	(4) UNIT OF ISSUE	(5) QTY INC IN UNIT PACK	(6) QTY INC IN UNIT	(7) 30-DAY DS GS MAINT ALW (a) 1-20	(b) 21-50	(c) 51-100	(8) 1-YR ALW PER 100 EQUIP CNTGCY	(9) DEPOT MAINT ALW PER 100 EQUIP	(10) ILLUSTRATION (a) FIG NO	(b) TEM NO
					CONTINUED										188	
					0.009 IN.US ON THK											
P	D		5340-478-9990	2019D19 <66640>	..RING,RETAINING.....	12	EA		1					*	188	10
P	D		5320-957-2867	18D93 <66640>	..RIVET.....	12	EA		16					*	188	
P	D		2810-870-0837	147781 <66640>	..COUPLING,ACCESSORY DRIVE...	12	EA		1					*	188	11
			5340-252-4764	2185D37 <66640>	...RING,RETAINING.....	12									188	
					RPL-BY 5340-877-5324											
P	D		5340-877-5324	248D77 <66640>	...RING,RETAINING.....	12	EA		1					*	188	
					RPLS-- 5340-252-4764											
P	D		5315-852-9234	29D45 <66640>	...PIN,STRAIGHT,HEADLESS.....	12	EA		6					*	188	
X1				434027 <66640>	..COUNTERWEIGHT AND BUSHING..	12	EA		1						188	
					ASSEMBLY											
				430082 <66640>	...COUNTERWEIGHT MACHINING...	12	EA		1						188	
					ASSEMBLY											
					OBS-BY PN 434056											
X1				434056 <66640>	...COUNTERWEIGHT AND BUSHING.	12	EA		1						188	
					OBLTS PN 430082											
P	D		5310-149-9242	129158 <66640>	....NUT,PLAIN,ROUND.....	12	EA		4					*	188	12
P	D		5306-168-5093	129157 <66640>	....BOLT,SHOULDER.....	12	EA		2					*	188	13
P	D		2810-306-5850	129159 <66640>	....CUP,COUNTERWEIGHT BOLT...	12	EA		4					*	188	14
X1				148308 <66640>	....COUNTERWEIGHT,REAR.....	12	EA		1						188	
P	D		2810-963-9073	149351 <66640>	.....STRIP,COUNTERWEIGHT.....	12	EA		1					*	188	
P	D		2810-963-9075	149352 <66640>	.....STRIP,COUNTERWEIGHT.....	12	EA		1					*	188	
				171923 <66640>	....COUNTERWEIGHT-REAR,REAR..	12									188	
					HALF OBS-BY PN 148309											
X1				148309 <66640>	....COUNTERWEIGHT,REAR.....	12	EA		1						188	
					OBSLTS PN 171923											
P	D		2810-954-4725	149353 <66640>	.....STRIP,COUNTERWEIGHT.....	12	EA		1					*	188	
P	D		2810-957-8514	149354 <66640>	.....STRIP,COUNTERWEIGHT.....	12	EA		1					*	188	
P	D		2810-478-8835	111203 <66640>	...BEARING,SLEEVE.....	12	EA		4					*	188	15
P	D		3120-850-2541	111203Y1 <66640>	...BUSHING,SLEEVE-0.002 IN...	12	EA		AR					*	188	
					OVERSIZE ON OD											
P	D		2810-850-8480	111203Y2 <66640>	...BUSHING,SLEEVE-0.004 IN...	12	EA		AR					*	188	
					OVERSIZE ON OD											
P	D		2810-989-9805	111203Y3 <66640>	...BUSHING,SLEEVE-0.006 IN...	12	EA		AR					*	188	
					OVERSIZE ON OD											
P	D		2810-524-3467	171445 <66640>	..PIN,COUNTERWEIGHT.....	12	EA		2					*	188	16
P	D		2810-478-9451	128258 <66640>	..BEARING,SLEEVE.....	12	EA		2					*	188	17
			2810-995-6902	128259 <66640>	..BUSHING,SLEEVE RPL-BY.....	12									188	
					2810-780-6486											
			2810-672-5841	146473 <66640>	..BUSHING,SLEEVE RPL-BY.....	12									188	
					2810-780-6486											
P	D		2810-780-6486	149119 <66640>	..BUSHING,COUNTERWEIGHT.....	12	EA		AR					*	188	
					RPLS-- 2810-672-5841,											
					2810-995-6902											
			2810-445-1509	128259Y1 <66640>	..BUSHING RPL-BY.....	12									188	
					2810-034-3711											
			2810-445-1510	146473Y1 <66640>	..BUSHING RPL-BY.....	12									188	
					2810-034-3711											
P	D		2810-034-3711	149119Y1 <66640>	..BUSHING-0.002-IN.OVERSIZE..	12	EA		AR					*	188	18
					ON OD RPLS--											
					2810-445-1509,											

(1) SOURCE, MAINT AND REC CODE (a) SOURCE CODE	(b) MAINT LEVEL	(c) REC CODE	(2) FEDERAL STOCK NUMBER	REFERENCE NUMBER	(3) DESCRIPTION	MODELS USABLE ON CH-34C	(4) UNIT OF ISSUE	(5) QTY INC IN UNIT PACK	(6) QTY INC IN UNIT	(7) 30-DAY DS/GS MAINT ALW (a) 1-20	(b) 21-50	(c) 51-100	(8) 1-YR ALW PER 100 EQUIP CNTGCY	(9) DEPOT MAINT ALW PER 100 EQUIP	(10) ILLUSTRATION (a) FIG NO	(b) ITEM NO
					CONTINUED 2810-445-1510										188	18
P	D		2810-828-9698	149119Y2 <66640>	..BEARING,SLEEVE.....	2	EA		2					*	188	
P	D		2810-828-9693	149119Y3 <66640>	..BEARING,SLEEVE.....	2	EA		2					*	188	
P	D		3120-601-7314	149119Y4 <66640>	..BUSHING,SLEEVE.....	2	EA		2					*	188	
P	D		3120-881-1683	149119Y5 <66640>	..BUSHING,SLEEVE.....	2	EA		2					5	188	
X1				434025 <66640>	..COUNTERWEIGHT AND BUSHING.. ASSEMBLY	12	EA		1						188	
X1				434044 <66640>	...COUNTERWEIGHT MACHINING...	12	EA		1						188	
X1				148302 <66640>	....COUNTERWEIGHT,FRONT-..... FRONT HALF	12	EA		1						188	
P	D		2840-954-3987	149348 <66640>	.....STRIP,COUNTERWEIGHT.....	12	EA		1					*	188	
P	D		2810-954-3985	149347 <66640>	.....STRIP,COUNTERWEIGHT.....	12	EA		1					100	188	
X1				148303 <66640>	....COUNTERWEIGHT-FRONT..... REAR HALF	12	EA		1						188	
P	D		2840-954-3999	149349 <66640>	.....STRIP,COUNTERWEIGHT.....	12	EA		1					100	188	
P	D		2840-954-4299	149350 <66640>	.....STRIP,COUNTERWEIGHT.....	12	EA		1					100	188	
P	D		5310-149-9242	129158 <66640>	....NUT,PLAIN,ROUND.....	12	EA		4					*	188	19
P	D		5306-168-5093	129157 <66640>	....BOLT,SHOULDER.....	12	EA		2					*	188	20
P	D		2810-306-5850	129159 <66640>	....CUP,COUNTERWEIGHT BOLT...	12	EA		4					*	188	21
P	D		2810-098-2644	171918 <66640>	...BUSHING,SLEEVE.....	12	EA		4					*	188	22
P	D		2810-862-4857	171918Y1 <66640>	...BUSHING,SLEEVE-0.002 IN... OVERSIZE ON OD	12	EA		AR					*	188	
P	D		2810-870-3896	171918Y2 <66640>	...BUSHING,SLEEVE-0.004 IN... OVERSIZE ON OD	12	EA		AR					*	188	
P	D		2810-870-3895	171918Y3 <66640>	...BUSHING,SLEEVE-0.006 IN... OVERSIZE ON OD	12	EA		AR					*	188	
			2810-870-3894	171918Y4 <66640>	...BUSHING,SLEEVE-0.008 IN... OVERSIZE ON OD USE UNTIL EXHAUSTED,NO REPLACEMENT	12	EA		AR						188	
			2810-895-9424	171918Y5 <66640>	...BUSHING,SLEEVE-0.010 IN... OVERSIZE ON OD USE UNTIL EXHAUSTED,NO REPLACEMENT	12	EA		AR						188	
			2810-882-8283	171918Y6 <66640>	...BUSHING,SLEEVE-0.012 IN... OVERSIZE ON OD USE UNTIL EXHAUSTED,NO REPLACEMENT	12	EA		AR						188	
P	D		2810-751-8688	171918Y7 <66640>	...BUSHING,SLEEVE-0.014 IN... OVERSIZE ON OD	12	EA		1					*	188	
			2810-751-8752	171918Y8 <66640>	...BUSHING,SLEEVE-0.016 IN... OVERSIZ ON OD USE UNTIL EXHAUSTED,NO REPLACEMENT	12	EA		AR						188	
P	D		2810-524-3467	171445 <66640>	..PIN,COUNTERWEIGHT.....	12	EA		2					*	188	23
P	D		2810-662-2415	171919 <66640>	..BUSHING,SLEEVE.....	12	EA		2					*	188	24
P	D		2810-825-8255	171919Y1 <66640>	..BUSHING,SLEEVE-0.002 IN.... OVERSIZE ON OD	12	EA		AR					*	188	
P	D		2810-989-9803	171919Y2 <66640>	..BUSHING,SLEEVE-0.004 IN.... OVERSIZE ON OD	12	EA		AR					*	188	
P	D		2810-989-9804	171919Y3 <66640>	..BUSHING,SLEEVE-0.006 IN....	12	EA		AR					*	188	

(1) SOURCE, MAINT AND REC CODE (a) SOURCE CODE	(b) MAINT LEVEL	(c) REC CODE	(2) FEDERAL STOCK NUMBER	REFERENCE NUMBER	(3) DESCRIPTION	MODELS USABLE ON CH-34C	(4) UNIT OF ISSUE	(5) QTY INC IN UNIT PACK	(6) QTY INC IN UNIT	(7) 30-DAY DS/GS MAINT ALW (a) 1-20	(b) 21-50	(c) 51-100	(8) 1-YR ALW PER 100 EQUIP CNTGCY	(9) DEPOT MAINT ALW PER 100 EQUIP	(10) ILLUSTRATION (a) FIG NO	(b) ITEM NO
					CONTINUED										188	
					OVERSIZE ON OD											
			2810-386-4439	428940 <66640>	..VALVE ASSEMBLY,PISTON OIL..	12									188	
					RPL-BY 2810-847-7471											
P	D		2810-847-7471	434062 <66640>	..VALVE ASSEMBLY,PISTON OIL..	12	EA		1					*	188	
					RPLS-- 2810-386-4439											
			5320-117-6943	AN426AD3-9 <88044>	...RIVET,SOLID.....	12	LB		1					*	188	25
			2810-478-9847	136248 <66640>	...NOZZLE,PISTON OIL.....	12									188	
					RPL-BY P/N 139353											
X1				139353 <66640>	...NOZZLE,PISTON OIL.....	12	EA		1						188	26
X1				149358 <66640>	...STOP,PISTON OIL CHECK.....	12	EA		1						188	27
					VALVE U/O											
					NHA 2810-386-4439											
X1				18D56 <66640>	...RIVET,SOLID.....	12	EA		1						188	
P	D		2810-478-9782	134827 <66640>	...SPRING,HELICAL.....	12	EA		1					*	188	28
					COMPRESSION											
P	D		3110-100-6149	MS150455 <96906>	...BALL,BEARING.....	12	HD		1					*	188	29
X1				170116 <66640>	...BODY,PISTON OIL CHECK.....	12	EA		1						188	30
					VALVE											
P	D		5310-302-6514	2067D158 <66640>	..WASHER,BOLT TAB LOCK.....	12	EA		1					*	188	31
			2810-045-6625	433714 <66640>	..PLUG AND PIN ASSEMBLY.....	12									188	
					RPL-BY 2810-034-3702											
P	D		2810-034-3702	433985 <66640>	.PLUG AND PIN ASSEMBLY.....	12	EA		1					*	188	
					RPLS-- 2810-045-6625											
			5315-276-0092	AN122704 <88044>	..PIN,STRAIGHT,HEADLESS.....	12	EA		1					*	188	32
X1				2094D94 <66640>	..DISK,SOLID,PLAIN.....	12	EA		AR						188	
X1				2094S94 <66640>	..DISK,SOLID,PLAIN.....	12	EA		AR						188	
					0.010 IN.OS ON OD											
X1				2094J94 <66640>	..DISK,SOLID,PLAIN.....	12	EA		AR						188	
					0.015 IN.OS ON OD											
			5315-205-0032	20H9 <66640>	..PIN,STRAIGHT,HEADLESS.....	12									188	
					0.002 IN.OVERSIZE ON OD											
					RPL-BY 5315-148-0817											
P	D		5315-148-0817	20S9 <66640>	..PIN,STRAIGHT,HEADLESS.....	12	EA		AR					*	188	
					0.010 IN.OVERSIZE ON OD											
					RPLS-- 5315-205-0032											
P	D		5315-597-5084	20J9 <66640>	..PIN,STRAIGHT,HEADLESS.....	12	EA		AR					*	188	
					0.015 IN.OVERSIZE ON OD											
			2810-034-3701	149292 <66640>	..PLUG,SLUDGE RETAIN.....	12									188	
					OBS-BY PN 149149C											
X1				149149C <66640>	..PLUG,CRANK PIN,SLUDGE.....	12	EA		1						188	33
					OBSLTS 2810-034-3701											
P	D		2810-807-0721	5072D82 <66640>	..PACKING,PREFORMED.....	12	EA		2					*	188	34
P	D		5305-544-9969	2075D15 <66640>	..SCREW.....	12	EA		1					*	188	35
P	D		5310-168-5114	2067D9 <66640>	..WASHER,KEY.....	12	EA		1					*	188	36
P	D		2810-118-8220	68531 <66640>	..PLUG,CRANKSHAFT.....	12	EA		1					*	188	37
X1				128261 <66640>	..CRANKSHAFT,REAR END.....	12	EA		1						188	
X1				171925 <66640>	..CRANKSHAFT,FRONT END.....	12	EA		1						188	
P	D		2810-306-5790	117547 <66640>	.SPACER,CONNECTING ROD.....	12	EA		1					*	188	38
P	D		2810-306-5791	117547Y1 <66640>	.SPACER-0.005 IN.OVERSIZE....	12	EA		AR					*	188	
					ON THK											
P	D		2810-306-5792	117547Y2 <66640>	.SPACER-0.010 IN.OVERSIZE....	12	EA		AR					*	188	

(1) SOURCE, MAINT AND REC CODE (a) SOURCE CODE	(b) MAINT LEVEL	(c) REC CODE	(2) FEDERAL STOCK NUMBER	REFERENCE NUMBER	(3) DESCRIPTION	MODELS USABLE ON CH-34C	(4) UNIT OF MEAS	(5) QTY INC IN UNIT PACK	(6) QTY INC IN UNIT	(7) 30-DAY DS/GS MAINT ALW (a) 1-20	(b) 21-50	(c) 51-100	(8) 1-YR ALW PER 100 EQUIP CNTGCY	(9) DEPOT MAINT ALW PER 100 EQUIP	(10) ILLUSTRATION (a) FIG NO	(b) ITEM NO
					CONTINUED ON THK										188	
P	D		2810-306-5793	117547Y3 <66640>	.SPACER-0.020 IN.OVERSIZE.... ON THK	12	EA		AR					*	188	
P	D		2810-306-5794	117547Y4 <66640>	.SPACER-0.030 IN.OVERSIZE.... ON THK	12	EA		AR					*	188	
P	D		2810-856-0335	117547Y5 <66640>	.SPACER-0.040 IN.OVERSIZE.... ON THK	12	EA		AR					*	188	
			2810-440-2862	117547Y6 <66640>	.SPACER-0.050 IN.OVERSIZE.... ON THK USE UNTIL EXHAUSTED,NO REPLACEMENT	12	EA		AR						188	
P	D		2810-512-9595	117547Y10 <66640>	.SPACER,MASTER,CONNECTING.... 0.005 IN.UNDERSIZE ON ID OF LIP	12	EA		AR					*	188	
P	D		2810-512-9596	117547Y12 <66640>	.SPACER,MASTER,CONNECTING.... 0.010 IN.OVERSIZE ON THK, 0.005 IN.UNDERSIZE ON ID OF LIP	12	EA		AR					*	188	
P	D		2810-440-2854	117547Y20 <66640>	.SPACER-0.010 IN.UNDERSIZE... ON ID OF LIP	12	EA		AR					*	188	
P	D		2810-440-2855	117547Y22 <66640>	.SPACER-0.010 IN.OVERSIZE.... ON THK & UNDERSIZE ON ID OF LIP	12	EA		AR					*	188	
			2810-118-6387	117547Y24 <66640>	.SPACER-0.030 IN.OVERSIZE.... ON THK,0.010 IN.UNDERSIZE ON ID OF LIP USE UNTIL EXHAUSTED,NO REPLACEMENT	12	EA		AR						188	
P	D		2810-885-6547	117547Y30 <66640>	.SPACER-0.015 IN.UNDERSIZE... ON ID OF LIP	12	EA		AR					*	188	
P	D		2810-863-1185	117547Y32 <66640>	.SPACER-0.010 IN.OVERSIZE.... ON THK,0.015 IN.UNDERSIZE ON ID OF LIP	12	EA		AR					*	188	
			2810-863-7949	117547Y40 <66640>	.SPACER-0.020 IN.UNDERSIZE... ON ID OF LIP USE UNTIL EXHAUSTED,NO REPLACEMENT	12	EA		AR						188	
P	D		2810-863-7950	117547Y44 <66640>	.SPACER-0.030 IN.OVERSIZE.... ON THK,0.020 IN.UNDERSIZE ON ID OF LIP	12	EA		AR					*	188	
			2810-118-6350	117547Y45 <66640>	.SPACER-0.040 IN.OVERSIZE.... ON THK,0.020 IN.UNDERSIZE ON ID OF LIP USE UNTIL EXHAUSTED,NO REPLACEMENT	12	EA		AR						188	
			2810-863-7951	117547Y60 <66640>	.SPACER-0.030 IN.UNDERSIZE... ON ID OF LIP USE UNTIL EXHAUSTED,NO REPLACEMENT	12	EA		AR						188	
			2810-863-1180	117547Y64 <66640>	.SPACER-0.030 IN.OVERSIZE.... ON THK & UNDERSIZE ON ID OF LIP USE UNTIL EXHAUSTED,NO REPLACEMENT	12	EA		AR						188	
			2810-863-7954	117547Y90 <66640>	.SPACER-0.045 IN.UNDERSIZE...	12	EA		AR						188	

(1) SOURCE, MAINT AND REC CODE (a) SOURCE CODE	(b) MAINT LEVEL	(c) REC CODE	(2) FEDERAL STOCK NUMBER	REFERENCE NUMBER	(3) DESCRIPTION	MODELS USABLE ON CH-34C	(4) UNIT OF ISSUE	(5) QTY INC IN UNIT PACK	(6) QTY INC IN UNIT	(7) 30-DAY DS-GS MAINT ALW (a) 1-20	(b) 21-50	(c) 51-100	(8) 1-YR ALWPER 100 EQUIP CNTGCY	(9) DEPOT MAINT ALWPER 100 EQUIP	(10) ILLUSTRATION (a) FIG NO	(b) ITEM NO
					CONTINUED ON ID OF LIP USE UNTIL EXHAUSTED,NO REPLACEMENT										188	
			2810-863-7947	117547Y100 <66640>	.SPACER-0.050 IN.UNDERSIZE... ON ID OF LIP USE UNTIL EXHAUSTED,NO REPLACEMENT	12	EA		AR						188	
P	D		2810-780-0901	147641 <66640>	.DISK.....	12	EA		1					*	188	39
P	D		2810-784-3979	147641Y1 <66640>	.DISK-0.005 IN.OVERSIZE ON... THK	12	EA		AR					*	188	
P	D		2810-780-0903	147641Y2 <66640>	.DISK-0.010 IN.OVERSIZE ON... THK	12	EA		AR					*	188	
P	D		2810-690-5198	147641Y16 <66640>	.DISK,MASTER ROD-0.030..... IN.OVERSIZE ON THK	12	EA		AR					*	188	
P	D		2810-870-3897	147641Y8 <66640>	.DISK-0.015 IN.OVERSIZE ON... THK,0.005 IN.OVERSIZE ON OD	12	EA		AR					*	188	
P	D		2810-863-1146	147641Y11 <66640>	.DISK-0.005 IN.OVERSIZE ON... FACE THK.,0.010 IN. OVERSIZE ON OD	12	EA		AR					*	188	
P	D		2810-075-9162	147641Y25 <66640>	.DISK-0.035 IN.OVERSIZE ON... FACE THK,0.010 IN. OVERSIZE ON OD	12	EA		AR					*	188	
			5310-262-5516	AN315C6R <88044>	.NUT,PLAIN,HEXAGON.....	12	EA		8					*	188	40
P	D		2810-215-9630	171413 <66640>	.LOCK,KNUCKLE PIN RETAINING..	12	EA		8					*	188	41
P	D		5306-208-7661	170090 <66640>	.BOLT,EXTERNALLY RELIEVED....	12	EA		8					*	188	42
P	D		2810-794-7862	147848 <66640>	.PLATE,KNUCKLE PIN..... RETAINING	12	EA		1					*	188	43
P	D		5315-034-4991	170077 <66640>	.PIN,KNUCKLE.....	12	EA		1					*	188	44
P	D		2810-717-8912	170077Y5 <66640>	.PIN,KNUCKLE-0.0020 IN..... OVERSIZE ON OD	12	EA		AR					*	188	
P	D		5315-320-2127	170077Y1 <66640>	.PIN,KNUCKLE-0.0050 IN..... OVERSIZE ON OD	12	EA		AR					*	188	
P	D		2810-345-3909	170077Y2 <66640>	.PIN,KNUCKLE 0.0100 IN..... OVERSIZE ON OD	12	EA		AR					*	188	
P	D		2810-895-9422	170077Y3 <66640>	.PIN,KNUCKLE-.0150 IN..... OVERSIZE ON OD	12	EA		AR					*	188	
P	D		2810-895-9423	170077Y4 <66640>	.PIN,KNUCKLE-.0200 IN..... OVERSIZE ON OD	12	EA		AR					*	188	
			2810-098-2657	430079N2 <66640>	.ROD AND BUSHING ASSEMBLY.... RPL-BY 2810-885-4060	12									188	
P	D		2810-885-4060	430079N3 <66640>	.ROD AND BUSHING ASSEMBLY.... RPLS-- 2810-098-2657	12	EA		8					*	188	45
P	D		2810-479-0221	2119D17 <66640>	..BUSHING,SLEEVE.....	12	EA		8					*	188	46
P	D		2810-479-0222	2119H17 <66640>	..BUSHING,SLEEVE-0.002 IN.... OVERSIZE ON OD	12	EA		AR					*	188	
P	D		2810-967-3389	2119S17 <66640>	..BUSHING,SLEEVE-0.005 IN.... OVERSIZE ON OD	12	EA		AR					*	188	
P	D		2810-797-4830	2119J17 <66640>	..BEARING-SLEEVE-0.010 IN.... OVERSIZE ON OD	12	EA		AR					*	188	
P	D		2810-479-0220	2119D12 <66640>	..BUSHING,SLEEVE.....	12	EA		1					*	188	47

(1) SOURCE, MAINT AND REC CODE (a) SOURCE CODE	(b) MAINT LEVEL	(c) REC CODE	(2) FEDERAL STOCK NUMBER	REFERENCE NUMBER	(3) DESCRIPTION	MODELS USABLE ON CH-34C	(4) UNIT OF ISSUE	(5) QTY INC IN UNIT PACK	(6) QTY INC IN UNIT	(7) 30-DAY DS/GS MAINT ALW (a) 1-20	(b) 21-50	(c) 51-100	(8) 1-YR ALW PER 100 EQUIP CNTGCY	(9) DEPOT MAINT ALW PER 100 EQUIP	(10) ILLUSTRATION (a) FIG NO	(b) ITEM NO
P	D		2810-797-4829	2119S12	<66640> ..BEARING-SLEEVE-0.005 IN.... OVERSIZE ON OD	12	EA		AR					*	188	
X1				171924	<66640> ..ROD,ARTICULATING.....	12	EA		1						188	
P	D		2810-501-2888	147846	<66640> .BEARING,CONNECTING ROD.....	12	EA		1					*	188	48
P	D		2810-501-2903	147846Y1	<66640> .BEARING,CONNECTING ROD-..... 0.002 IN.UNDERSIZE ON ID	12	EA		AR					*	188	
P	D		2810-501-2899	147846Y2	<66640> .BEARING,CONNECTING ROD-..... 0.004 IN.UNDERSIZE ON ID 2810-779-6174	12	EA		AR					*	188	
P	D		2810-971-3947	147846Y3	<66640> .BEARING,CONNECTING ROD-..... IN.UNDERSIZE ON ID	12	EA		AR					*	188	
P	D		2810-445-2455	147846Y4	<66640> .BEARING,CONNECTING ROD..... 0.008 IN.UNDERSIZE ON ID	12	EA		AR					*	188	
P	D		2810-963-0982	147846Y5	<66640> .BEARING,CONNECTING ROD-..... 0.010 IN.UNDERSIZE ON ID	12	EA		AR					*	188	
P	D		2810-501-2894	147846Y6	<66640> .BEARING.....	12	EA		AR					*	188	
			2810-501-2902	147846Y10	<66640> .BEARING-0.005 IN.OS ON OD USE UNTIL EXHAUSTED,NO REPLACEMENT	12	EA		AR						188	
P	D		2810-501-2901	147846Y11	<66640> .BEARING-0.005 IN.OVERSIZE... ON OD,0.002 IN.UNDERSIZE ON ID	12	EA		AR					*	188	
P	D		2810-501-2900	147846Y12	<66640> .BEARING,CONNECTING ROD-..... 0.005 IN.OVERSIZE ON OD, 0.004 IN.UNDERSIZE ON ID	12	EA		AR					*	188	
P	D		2810-972-5309	147846Y13	<66640> .BEARING,CONNECTING ROD..... 0.005 IN.OVERSIZE ON OD, 0.006 IN.UNDERSIZE ON ID	12	EA		AR					*	188	
P	D		2810-501-2898	147846Y20	<66640> .BEARING-0.010 IN.OVERSIZE... ON OD	12	EA		AR					*	188	
			2810-049-0088	429860N	<66640> .ROD ASSEMBLY,MASTER..... RPL-BY 2810-885-6436	12									188	
P	D		2810-885-6436	429860N3	<66640> .ROD ASSEMBLY,MASTER..... RPLS-- 2810-049-0088	12	EA		1					15	188	49
P	D		2810-479-0221	2119D17	<66640> ..BUSHING,SLEEVE.....	12	EA		1					*	188	50
P	D		2810-479-0222	2119H17	<66640> ..BUSHING,SLEEVE-0.002 IN.... OVERSIZE ON OD	12	EA		AR					*	188	
P	D		2810-967-3389	2119S17	<66640> ..BUSHING,SLEEVE-0.005 IN.... OVERSIZE ON OD	12	EA		AR					*	188	
P	D		2810-797-4830	2119J17	<66640> ..BEARING-SLEEVE-0.010 IN.... OVERSIZE ON OD	12	EA		AR					*	188	
X1				171446	<66640> ..ROD-MASTER CONNECTING.....	12	EA		1						188	

(1) SOURCE, MAINT AND REC CODE (a) SOURCE CODE	(b) MAINT LEVEL	(c) REC CODE	(2) FEDERAL STOCK NUMBER	REFERENCE NUMBER		(3) DESCRIPTION	MODELS USABLE ON CH-34C	(4) UNIT OF ISSUE	(5) QTY INC IN UNIT PACK	(6) QTY INC IN UNIT	(7) 30-DAY DS GS MAINT ALW (a) 1-20	(b) 21-50	(c) 51-100	(8) 1-YR ALW PER 100 EQUIP CNTGCY	(9) DEPOT MAINT ALW PER 100 EQUIP	(10) ILLUSTRATION (a) FIG NO	(b) ITEM NO
P	D		2810-077-1757	433965	<66640>	CRANKCASE,MAIN SECTION..... MACHINING ASSEMBLY SEE FIG.183A FOR NHA	12	EA		1					*	189	1
X1				171733	<66640>	.CRANKCASE,MAIN,FRONT..... SECTION	12	EA		1						189	
X1				148298	<66640>	.CRANKCASE,MAIN,REAR..... SECTION ATTACHING PARTS	12	EA		1						189	
			5315-234-1864	MS24665-302	<96906>	.PIN,COTTER.....	12	HD		9					*	189	2
P	D		5306-207-6434	2045D19	<66640>	.BOLT,MACHINE.....	12	EA		9					*	189	3
			5310-582-8458	AN121562	<88044>	.NUT,CASTELLATED,HEXAGON.....	12	EA		9					*	189	4
P	D		5310-147-6555	34D131	<66640>	.WASHER,FLAT..... ---*---	12	EA		9					*	189	5
			5315-822-5732	2037D186	<66640>	.PIN,SHOULDER,HEADLESS..... OBSOLETE NO REPLACEMENT	12									189	6
			2810-798-8574	148300	<66640>	.LINER,CRANKCASE MAIN..... SECTION RPL-BY 2810-C76-9062	12									189	
P	D		2810-076-9062	149210	<66640>	.LINER,MAIN SECTION,REAR..... RPLS-- 2810-097-4288, 2810-798-8574	12	EA		1					*	189	7
			2810-803-5249	148300Y1	<66640>	.LINER,CRANKCASE RPL-BY..... 2810-076-9060	12									189	
P	D		2810-076-9060	149210Y1	<66640>	.LINER RPLS-- 2810-803-5249.	12	EA		AR					*	189	
			2810-055-5179	148300Y2	<66640>	.LINER,CRANKCASE RPL-BY..... 2810-076-9061	12									189	
P	D		2810-076-9061	149210Y2	<66640>	.LINER RPLS-- 2810-055-5179.	12	EA		AR					*	189	
P	D		2810-097-4287	170948	<66640>	.LINER,CRANKCASE MAIN..... SECTION	12	EA		1					*	189	8
P	D		2810-326-6711	68332	<66640>	.DOWEL,CRANKCASE,HOLLOW.....	12	EA		15					*	189	10
			5330-599-0046	2083D1	<66640>	.PACKING,PREFORMED..... RPL-BY 5330-722-0101	12									189	
P	D		5330-722-0101	2083D251	<66640>	.PACKING,PREFORMED..... RPLS-- 5330-599-0046	12	EA		15					*	189	11
			2810-479-1342	68415	<66640>	.PACKING,PREFORMED..... RPL-BY 5330-722-0103	12									189	
P	D		5330-722-0103	2083D261	<66640>	.PACKING,PREFORMED..... RPLS-- 2810-479-1342	12	EA		2					*	189	12
			5330-478-9674	131867	<66640>	.PACKING,PREFORMED..... RPL-BY 2810-672-4938	12									189	
			5330-479-1603	97D5	<66640>	.PACKING..... RPL-BY 2810-672-4938	12									189	
P	D		2810-672-4938	97D9	<66640>	.PACKING RPLS--..... 5330-479-1603	12	EA		9					*	189	13
						CYLINDERS AND PISTONS SEE... FIG.183A FOR NHA	12			1						190	

(1) SOURCE, MAINT AND REC CODE (a) SOURCE CODE	(b) MAINT LEVEL CODE	(c) RECOVERY CODE	(2) FEDERAL STOCK NUMBER	REFERENCE NUMBER	(3) DESCRIPTION	MODELS USABLE ON CH-34C	(4) UNIT OF ISSUE	(5) QTY INC IN UNIT PACK	(6) QTY INC IN UNIT	(7) 30-DAY DS/GS MAINT ALW (a) 1-20	(b) 21-50	(c) 51-100	(8) 1-YR ALW PER 100 EQUIP CNTGCY	(9) DEPOT MAINT ALW PER 100 EQUIP	(10) ILLUSTRATION (a) FIG NO	(b) ITEM NO
		T	2810-070-7830	893259 <66640>	CYLINDER AND PISTON..... ASSEMBLY RPL-BY 2810-125-4133	12									190	
		T	2810-344-1434	891810 <66640>	CYLINDER AND PISTON..... ASSEMBLY RPL-BY 2810-125-4133	12									190	
		T	2810-654-9051	892839 <66640>	CYLINDER AND PISTON..... ASSEMBLY RPL-BY 2810-125-4133	12									190	
		T	2810-671-6637	893270 <66640>	CYLINDER AND PISTON..... ASSEMBLY RPL-BY 2810-125-4133	12									190	
		T	2810-696-9505	891882 <66640>	CYLINDER AND PISTON..... ASSEMBLY RPL-BY 2810-125-4133	12									190	
		T	2810-763-2154	893290 <66640>	CYLINDER AND PISTON..... ASSEMBLY RPL-BY 2810-125-4133	12									190	
		T	2810-016-0646	893447 <66640>	CYLINDER AND PISTON..... ASSEMBLY RPL-BY 2810-125-4133	12									190	
P	F	T	2810-951-8712	893684 <66640>	CYLINDER AND PISTON ASSEMBLY.	12	EA		1	*	2	2	26	*	190	
			2810-066-4182	893258 <66640>	CYLINDER, PISTON RPL-BY..... 2810-179-6985	12									190	
		T	2810-344-1432	891809 <66640>	CYLINDER AND PISTON..... ASSEMBLY RPL-BY 2810-179-6985	12									190	
		T	2810-608-6170	892333 <66640>	CYLINDER AND PISTON..... ASSEMBLY RPL-BY 2810-179-6985	12									190	
		T	2810-656-3658	892838 <66640>	CYLINDER AND PISTON..... ASSEMBLY RPL-BY 2810-179-6985	12									190	
		T	2810-671-6638	893269 <66640>	CYLINDER PISTON ASSEMBLY..... RPL-BY 2810-179-6985	12									190	
		T	2810-696-9504	891881 <66640>	CYLINDER AND PISTON..... ASSEMBLY RPL-BY 2810-179-6985	12									190	
		T	2810-016-0643	893446 <66640>	CYLINDER AND PISTON ASSEMBLY. RPL-BY 2810-179-6985	12									190	
		T	2810-757-4845	893289 <66640>	CYLINDER AND PISTON ASSEMBLY. RPL-BY 2810-179-6985	12									190	
P	F	T	2810-179-6985	893685 <66640>	CYLINDER AND PISTON..... ASSEMBLY	12	EA		1	*	2	3	36	*	190	
			2810-991-8489	433651 <66640>	.CYLINDER, MACHINING AND..... STUDDING ASSEMBLY RPL-BY 2810-133-9821	12									190	
			2810-085-7402	433493 <66640>	.CYLINDER, MACHINING AND..... STUDDING ASSEMBLY RPL-BY 2810-133-9821	2									190	
			2810-086-4998	433607 <66640>	.CYLINDER, MACHINING AND..... STUDDING ASSEMBLY RPL-BY	2									190	

(1) SOURCE, MAINT AND REC CODE (a) SOURCE CODE	(b) MAINT LEVEL	(c) REC CODE	(2) FEDERAL STOCK NUMBER	REFERENCE NUMBER	(3) DESCRIPTION	MODELS USABLE ON CH-34C	(4) UNIT OF ISSUE	(5) QTY INC IN UNIT PACK	(6) QTY INC IN UNIT	(7) 30-DAY DS/GS MAINT ALW (a) 1-20	(b) 21-50	(c) 51-100	(8) 1 YR ALW PER 100 EQUIP CNTGCY	(9) DEPOT MAINT ALW PER 100 EQUIP	(10) ILLUSTRATION (a) FIG NO	(b) ITEM NO
					CONTINUED										190	
					2810-133-9821											
			2810-217-3732	430029 <66640>	.CYLINDER,MACHINING AND.....	2									190	
					STUDDING ASSEMBLY RPL-BY											
					2810-133-9821											
			2810-630-2173	432097 <66640>	.CYLINDER,MACHINING AND.....	2									190	
					STUDDING ASSEMBLY RPL-BY											
					2810-133-9821											
			2810-697-8592	430863 <66640>	.CYLINDER,MACHINING AND.....	2									190	
					STUDDING ASSEMBLY RPL-BY											
					2810-133-9821											
			2810-872-9410	433498 <66640>	.CYLINDER,MACHINING AND.....	2									190	
					STUDDING ASSEMBLY RPL-BY											
					2810-133-9821											
P	D		2810-133-9821	433917 <66640>	.CYLINDER,MACHINING AND.....	12	EA		9					*	190	1
					STUDDING ASSEMBLY RPLS--											
					2810-085-7402,											
					2810-086-4998,											
					2810-217-3732,											
					2810-630-2173,											
					2810-697-8592,											
					2810-872-9410,											
					2810-991-8489 &											
					ATTACHING PARTS											
			5315-234-1856	MS24665-155 <96906>	.PIN,COTTER.....	12	HD		4	*	*	*		*	190	2
P	F		2810-478-9589	130571 <66640>	.PLATE,CYLINDER HOLD DOWN....	12	EA		4	13	31	63		*	190	3
					SCREW LOCKING											
			5306-298-8293	2045D77 <66640>	.BOLT,EXTERNALLY RELIEVED....	12									190	
					RPL-BY 5306-626-3843											
P	F		5306-626-3843	493D2 <66640>	.BOLT,EXTERNALLY RELIEVED....	12	EA		20	14	35	69	830	306	190	4
					BODY											
					RPLS-- 5306-298-8293											
P	F		5310-303-1362	2093D39 <66640>	.WASHER,SPHERICAL.....	12	EA		20	*	*	*		*	190	5
					---*---											
P	D		2810-076-2696	433472Y9 <66640>	..SEAT AND RING ASSEMBLY.....	12	EA		AR					*	190	6
					0.070 IN.OVERSIZE ON OD											
P	D		2810-076-2695	433472Y10 <66640>	..SEAT AND RING ASSEMBLY-....	12	EA		AR					*	190	
					0.080 IN.OVERSIZE ON OD											
P	D		2810-076-2693	433472Y11 <66640>	..SEAT AND RING ASSEMBLY.....	12	EA		AR					*	190	
					0.090 IN.OVERSIZE ON OD											
P	D		2810-872-9412	433472Y3 <66640>	..SEAT AND RING ASSEMBLY.....	12	EA		AR					*	190	
					0.010 IN.OVERSIZE ON OD											
P	D		2810-872-9413	433472Y4 <66640>	..SEAT AND RING ASSEMBLY.....	12	EA		AR					*	190	
					0.020 IN.OVERSIZE ON OD											
P	D		2810-872-9414	433472Y5 <66640>	..SEAT AND RING ASSEMBLY.....	12	EA		AR					*	190	
					0.030 IN.OVERSIZE ON OD											
P	D		2810-872-9415	433472Y6 <66640>	..SEAT AND RING ASSEMBLY.....	12	EA		AR					*	190	
					0.040 IN.OVERSIZE ON OD											
P	D		2810-084-1320	433472Y7 <66640>	..SEAT AND RING ASSEMBLY.....	12	EA		AR					*	190	
					0.050 IN.OVERSIZE ON OD											
P	D		2810-064-5503	433472Y8 <66640>	..SEAT AND RING ASSEMBLY.....	12	EA		AR					*	190	
					0.060 IN.OVERSIZE ON OD											

(1) SOURCE, MAINT AND REC CODE (a) SOURCE CODE	(b) MAINT LEVEL	(c) REC CODE	(2) FEDERAL STOCK NUMBER	(3) DESCRIPTION REFERENCE NUMBER			MODELS USABLE ON CH-34C	(4) UNIT OF ISSUE	(5) QTY INC IN UNIT PACK	(6) QTY INC IN UNIT	(7) 30-DAY DS/GS MAINT ALW (a) 1-20	(b) 21-50	(c) 51-100	(8) 1-YR ALW PER 100 EQUIP CNTGCY	(9) DEPOT MAINT ALW PER 100 EQUIP	(10) ILLUSTRATION (a) FIG NO	(b) ITEM NO
X1				146806	<66640>	...SEAT-EXHAUST VALVE.....	12	EA		1						190	
X1				146806Y1	<66640>	...SEAT,EXHAUST VALVE.....	12	EA		AR						190	
P	D		2810-322-4205	429199N3	<66640>	..FIN ASSEMBLY,CYLINDER..... BARREL	12	EA		2					*	190	7
X1				170474N3	<66640>	...FIN.....	12	EA		2						190	
X1				170473N3	<66640>	...WIRE-CYLINDER BARREL.....	12	EA		1						190	
P	D		2810-322-4204	429199N2	<66640>	..FIN ASSEMBLY,CYLINDER..... BARREL	12	EA		2					*	190	8
X1				170474N2	<66640>	...FIN.....	12	EA		2						190	
X1				170473N2	<66640>	...WIRE-CYLINDER BARREL.....	12	EA		1						190	
			2810-048-9525	427432N1	<66640>	..FIN ASSEMBLY,CYLINDER..... RPL-BY 2810-511-3654	12									190	
P	D		2810-511-3654	429199N1	<66640>	..FIN ASSEMBLY,CYLINDER..... BARREL RPLS-- 2810-048-9525	12	EA		4					*	190	9
X1				170474N1	<66640>	...FIN.....	12	EA		2						190	
X1				170473N1	<66640>	...WIRE-CYLINDER BARREL.....	12	EA		1						190	
			2810-310-8963	427432N8	<66640>	..FIN ASSEMBLY,CYLINDER..... RPL-BY 2810-322-4209	12									190	
P	D		2810-322-4209	429199N8	<66640>	..FIN ASSEMBLY,CYLINDER..... BARREL RPLS-- 2810-310-8963	12	EA		18					216	190	10
X1				170474N8	<66640>	...FIN CYLINDER BARREL.....	12	EA		2						190	
X1				170473N1	<66640>	...WIRE-CYLINDER BARREL.....	12	EA		1						190	
P	D		2810-322-4206	429199N7	<66640>	..FIN ASSEMBLY,CYLINDER..... BARREL	12	EA		14					*	190	11
X1				170474N7	<66640>	...FIN.....	12	EA		2						190	
X1				170473N1	<66640>	...WIRE-CYLINDER BARREL.....	12	EA		1						190	
			2810-217-3711	427432N11	<66640>	..FIN ASSEMBLY,CYLINDER..... RPL-BY 2810-322-4194	12									190	
P	D		2810-322-4194	429199N11	<66640>	..FIN ASSEMBLY,CYLINDER..... BARREL	12	EA		10					*	190	12
X1				170474N11	<66640>	...FIN.....	12	EA		2						190	
X1				170473N1	<66640>	...WIRE-CYLINDER BARREL.....	12	EA		1						190	
P	D		2810-919-2092	433664	<66640>	..BARREL AND FIN ASSEMBLY....	12	EA		1					*	190	
P	D		2810-076-9043	433664Y1	<66640>	..BARREL AND FIN ASSEMBLY....	12	EA		1					*	190	
P	D		2810-076-9042	433664Y2	<66640>	.BARREL AND FIN ASSEMBLY.....	12	EA		1					*	190	
P	D		2810-478-9553	130246	<66640>	..WIRE,CYLINDER BARREL.....	12	EA		1					*	190	13
			2810-097-4279	139049	<66640>	..FIN,CYLINDER BARREL..... DEFLECTOR RPL-BY 2810-686-1730	12									190	
P	D		2810-686-1730	145985	<66640>	..FIN,CYLINDER BARREL..... RPLS-- 2810-097-4279	12	EA		1					*	190	14
P	F		2810-345-1512	138697	<66640>	..BRACE,CYLINDER HEAD FIN....	12	EA		1	*	*	*		*	190	15
P	F		2810-217-3698	171030	<66640>	..BRACE,CYLINDER HEAD FIN....	12	EA		2	*	*	*		*	190	16
P	D		2810-654-3205	126102N23	<66640>	..SPRING,CYLINDER HEAD FIN...	12	EA		1					*	190	17
P	D		2810-567-6384	126102N13	<66640>	..SPRING,CYLINDER HEAD.....	2	EA		1					100	190	
P	D		2810-076-2697	126102N48	<66640>	..SPRING,CYLINDER HEAD-..... 0.030 IN.OVERSIZE ON OD	12	EA		AR					*	190	
P	F		2810-797-4037	148234	<66640>	..BRACE,CYLINDER FIN.....	12	EA		5	*	*	*		*	190	
P	F		2810-797-4038	148235	<66640>	..BRACE,COARSE.....	12	EA		5	*	*	*		*	190	
P	D		2810-215-9639	171906	<66640>	..DEFLECTOR,CYLINDER HEAD....	12	EA		1					*	190	18

(1) SOURCE, MAINT AND REC CODE (a) SOURCE CODE	(b) MAINT LEVEL	(c) REC CODE	(2) FEDERAL STOCK NUMBER	REFERENCE NUMBER	(3) DESCRIPTION	MODELS USABLE ON CH-34C	(4) UNIT OF ISSUE	(5) QTY INC IN UNIT PACK	(6) QTY INC IN UNIT	(7) 30-DAY DS GS MAINT ALW (a) 1-20	(b) 21-50	(c) 51-100	(8) 1-YR ALW PER 100 EQUIP CNTGCY	(9) DEPOT MAINT ALW PER 100 EQUIP	(10) ILLUSTRATION (a) FIG NO	(b) ITEM NO
			2810-313-3600	129992Y2	<66640> ..SEAT,VALVE..... RPL-BY 2810-118-1643	12									190	
P	D		2810-118-1643	129992Y3	<66640> ..SEAT,VALVE-0.010 IN..... OVERSIZE ON OD	12	EA		AR					*	190	19
P	D		2810-522-4818	129992Y4	<66640> ..SEAT,VALVE-0.020 IN..... OVERSIZE ON OD	12	EA		AR					*	190	
P	D		2810-097-4276	129992Y5	<66640> ..SEAT,VALVE-0.030 IN..... OVERSIZE ON OD RPLS-- 2810-694-0104	12	EA		AR					*	190	
P	D		2810-097-4277	129992Y6	<66640> ..SEAT,VALVE-0.040 IN..... OVERSIZE ON OD	12	EA		AR					*	190	
			2810-512-9564	115309	<66640> ..GUIDE,INTAKE GUIDE..... RPL-BY 2810-694-0102										190	
P	D		2810-628-3870	115309Y1	<66640> ..GUIDE,INTAKE VALVE-0.003... IN.OVERSIZE ON OD	12	EA		AR					*	190	
P	D		2810-694-0102	115309Y2	<66640> ..GUIDE,INTAKE VALVE-0.005... IN.OVERSIZE ON OD RPLS-- 2810-512-9564	12	EA		AR					*	190	20
P	D		2810-522-4806	115309Y3	<66640> ..GUIDE,INTAKE VALVE-0.010... IN.OVERSIZE ON OD	12	EA		AR					*	190	
P	D		2810-522-4807	115309Y4	<66640> ..GUIDE,INTAKE VALVE-0.020... IN.OVERSIZE ON OD	12	EA		AR					*	190	
P	D		2810-694-0103	115309Y5	<66640> ..BEARING,SLEEVE-0.030 IN.... OVERSIZE ON OD	12	EA		AR					*	190	
P	D		2810-331-6438	171475	<66640> ..SLEEVE,EXHAUST VALVE,..... GUIDE U/W P/N 171476	12	EA		1					*	190	
			2810-326-6684	171476Y2	<66640> ..GUIDE,EXHAUST VALVE-0.005.. IN.OVERSIZE ON OD RPL-BY 2810-326-6685	12									190	
P	D		2810-326-6685	171476Y3	<66640> ..GUIDE,EXHAUST VALVE-0.010.. IN.OVERDRIVE ON OD	12	EA		AR					*	190	21
			2810-048-8819	139155Y4	<66640> ..GUIDE,EXHAUST VALVE..... RPL-BY 2810-326-6686	12									190	
P	D		2810-326-6686	171476Y4	<66640> ..GUIDE,EXHAUST VALVE-0.020.. IN.OVERSIZE ON OD RPLS-- 2810-048-8819	12	EA		AR					*	190	
			2810-048-8820	139155Y5	<66640> ..GUIDE,EXHAUST VALVE..... RPL-BY 2810-326-6687	12									190	
P	D		2810-326-6687	171476Y5	<66640> ..GUIDE,EXHAUST VALVE-0.030.. IN.OVERSIZE ON OD RPLS-- 2810-048-8820	12	EA		AR					*	190	
P	D		2810-326-6688	171476Y6	<66640> ..GUIDE,EXHAUST VALVE-0.040.. IN.OVERSIZE ON OD	12	EA		AR					*	190	
			2810-505-8624	171476Y8	<66640> ..GUIDE,VALVE-0.060 IN..... OVERSIZE ON OD USE UNTIL EXHAUSTED,NO REPLACEMENT	12	EA		AR						190	
P	D		2810-326-6683	171476Y11	<66640> ..GUIDE,EXHAUST VALVE-0.100.. IN.OVERSIZE ON OD	12	EA		AR					*	190	
P	D		2810-331-6438	171475	<66640> ..SLEEVE,EXHAUST VALVE.....	12	EA		1					*	190	22
			5340-478-9413	127536Y3	<66640> ..ADAPTER,SPARK PLUG..... RPL-BY 2925-603-6624	12									190	
P	F		2925-603-6624	148431Y3	<66640> ..ADAPTER,SPARK PLUG-0.015...	12	EA		AR	*	*	*		*	190	23

(1) SOURCE, MAINT AND REC CODE (a) SOURCE CODE	(b) MAINT LEVEL	(c) RECOVERY CODE	(2) FEDERAL STOCK NUMBER	REFERENCE NUMBER	(3) DESCRIPTION	MODELS USABLE ON CH-34C	(4) UNIT OF ISSUE	(5) QTY INC IN UNIT PACK	(6) QTY INC IN UNIT	(7) 30-DAY DS/GS MAINT ALW (a) 1-20	(b) 21-50	(c) 51-100	(8) 1-YR ALW PER 100 EQUIP CNTGCY	(9) DEPOT MAINT ALW PER 100 EQUIP	(10) ILLUSTRATION (a) FIG NO	(b) ITEM NO
					CONTINUED										190	23
					IN.OVERSIZE ON OD											
					RPLS-- 5340-478-9413											
			5340-478-9414	127536Y4 <66640>	..ADAPTER,SPARK PLUG.....	12									190	
					RPL-BY 2925-603-6626											
P	F		2925-603-6626	148431Y4 <66640>	..ADAPTER,SPARK PLUG-0.030...	12	EA		AR	*	*	*		*	190	
					IN.OVERSIZE ON OD											
			2810-715-2709	148431Y6 <66640>	..INSERT,SPARK PLUG-0.030....	12	EA		AR	*	*	*			190	
					IN.OVERSIZE ON OD											
					USE UNTIL EXHAUSTED,NO											
					REPLACEMENT											
			5340-598-9689	127536Y5 <66640>	..INSERT,SCREW THREAD.....	12									190	
					RPL-BY 2925-603-6628											
P	F		2925-603-6628	148431Y5 <66640>	..ADAPTER,SPARK PLUG-0.040...	12	EA		AR	*	*	*		*	190	
					IN.OVERSIZE ON OD											
					RPLS-- 5340-598-9689											
P	F		5315-148-8941	13D38 <66640>	..PIN,STRAIGHT,HEADLESS.....	12	EA		2					*	190	24
			2810-048-8843	139226 <66640>	..BUSHING,SLEEVE RPL-BY.....	12									190	
					2810-905-6441											
			2810-048-8844	139226Y1 <66640>	..BUSHING,SLEEVE-0.003 IN....	12									190	
					OVERSIZE ON OD RPL-BY											
					2810-905-6441											
P	D		2810-905-6441	139226Y2 <66640>	..BUSHING,SLEEVE RPLS--.....	12	EA		AR					*	190	25
					2810-048-8843,											
					2810-048-8844											
P	D		2810-914-1821	139226Y3 <66640>	..BUSHING,SLEEVE.....	12	EA		1					180	190	
			2810-628-3866	139226Y4 <66640>	..BUSHING,SLEEVE RPL-BY.....	12									190	
					2810-662-2481											
P	D		2810-662-2481	139226Y5 <66640>	..BUSHING,SLEEVE-0.030 IN....	12	EA		AR					*	190	
					OVERSIZE ON OD											
P	F		2810-217-3699	171704 <66640>	..SPACER,DRAIN TUBE SUPPORT..	12	EA		2	*	*	*		*	190	26
X2	D			171704Y1 <66640>	..SPACER,SLEEVE.....	12	EA		1						190	
P	F		2810-820-9215	171704Y2 <66640>	..SPACER,SLEEVE-0.005 IN.....	12	EA		AR	*	*	*		*	190	
					OVERSIZE ON OD											
P	F		2810-820-6089	171704Y3 <66640>	..SPACER,SLEEVE-0.010 IN.....	12	EA		AR	*	*	*		*	190	
					OVERSIZE ON OD											
P	F		2810-820-4380	171704Y4 <66640>	..SPACER,SLEEVE-0.015 IN.....	12	EA		AR	*	*	*		*	190	
					OVERSIZE ON OD											
P	D		5310-209-2883	170263 <66640>	..WASHER,RECESSED.....	12	EA		2					*	190	27
P	D		2810-092-1743	138463 <66640>	..WASHER,VALVE SPRING.....	12	EA		1					*	190	28
			2810-092-1743	S6000-109 <12839>	ADDED PART NO FOR ABOVE.....	12	EA								190	28
					ITEM											
P	F		2810-512-9732	132303 <66640>	..CONNECTION,PUSH ROD.....	12	EA		2	*	*	*		*	190	29
					HOUSING											
			5305-150-9213	AN502-10-6 <88044>	..SCREW,MACHINE.....	12	HD		2	*	*	*		*	190	
			5310-167-0818	AN960-10 <88044>	..WASHER,FLAT.....	12	HD		2	*	*	*		*	190	
P	O		2810-509-5888	171907 <66640>	..CONNECTION,EXHAUST.....	12	EA		1	*	2	2		*	190	30
					RPLS-- 2810-396-3905											
P	O		2810-856-7056	171907Y1 <66640>	..CONNECTION,EXHAUST PIPE-...	12	EA		AR	*	*	*		*	190	
					0.020 IN.OVERSIZE ON OD											
P	O		2810-803-5311	171907Y2 <66640>	..CONNECTION,EXHAUST PIPE-...	12	EA		AR	*	*	*		*	190	
					0.040 IN.OVERSIZE ON OD											

(1) SOURCE, MAINT AND REC CODE (a) SOURCE CODE	(b) MAINT LEVEL	(c) REC CODE	(2) FEDERAL STOCK NUMBER	REFERENCE NUMBER	(3) DESCRIPTION	MODELS USABLE ON CH-34C	(4) UNIT OF ISSUE	(5) QTY INC IN UNIT PACK	(6) QTY INC IN UNIT	(7) 30-DAY DS GS MAINT ALW (a) 1-20	(b) 21-50	(c) 51-100	(8) 1-YR ALW PER 100 EQUIP CNTGCY	(9) DEPOT MAINT ALW PER 100 EQUIP	(10) ILLUSTRATION (a) FIG NO	(b) ITEM NO
					CONTINUED										190	
					ATTACHING PARTS											
P	D		5306-166-2071	2070D84 <66640>	..BOLT,MACHINE.....	12	EA		2	*	*	*		*	190	31
			5310-194-0636	MS9320-11 <96906>	..WASHER,FLAT.....	12	EA		2	*	*	*		*	190	
					---*---											
P	F		2810-860-0597	1185-5C <66640>	..INSERT,EXHAUST PIPE.....	12	EA		2	*	*	*		*	190	32
					CONNECTION											
			5307-285-3921	AN155027 <88044>	..STUD,STEPPED-0.003 IN.....	12	EA		AR	*	*	*		*	190	33
					OVERSIZE ON OD											
			5307-285-3918	AN155028 <88044>	..STUD,STEPPED-0.006 IN.....	12	EA		AR	*	*	*		*	190	
					OVERSIZE ON OD											
			5307-207-1955	AN155029 <88044>	..STUD,STEPPED-0.009 IN.....	12	EA		AR	*	*	*		*	190	
					OVERSIZE ON OD											
			5307-207-1956	AN155030 <88044>	..STUD,STEPPED-0.012 IN.....	12	EA		AR	*	*	*		*	190	
					OVERSIZE ON OD											
P	F		5340-595-0636	5042H2 <66640>	..INSERT,SCREW THREAD.....	12	EA		AR	*	*	*		*	190	35
P	F		5340-595-0637	5042S2 <66640>	..INSERT,SCREW THREAD.....	12	EA		AR	*	*	*		*	190	
P	F		5340-386-4441	5042J2 <66640>	..INSERT,SCREW THREAD.....	12	EA		AR	*	*	*		*	190	
P	D		4730-203-0373	5042H3 <66640>	..ADAPTER BUSHING-.....	12	EA		AR					*	190	37
					7											
P	D		2810-479-1105	5042S3 <66640>	..BUSHING,OPEN SCREW 0.007...	12	EA		AR					*	190	
					IN.OVERSIZE ON OD											
P	D		2810-386-4442	5042J3 <66640>	..BUSHING,OIL SUMP TO.....	12	EA		AR					*	190	
					SUPERCHARGER-0.012 IN.											
					OVERSIZE ON OD											
P	D		5340-479-1107	5043H2 <66640>	..INSERT,SCREW THREAD-0.003..	12	EA		AR					*	190	38
					IN.OVERSIZE ON OD											
P	D		4730-293-7391	5043S2 <66640>	..BUSHING,MACHINE THREAD-....	12	EA		AR					*	190	
					0.007 IN.OVERSIZE ON OD											
P	D		2810-386-4443	5043J2 <66640>	..BUSHING,BLIND SCREW,REAR-..	12	EA		AR					*	190	
					0.012 IN.OVERSIZE ON OD											
			2810-445-1509	5044D3 <66640>	..BUSHING,CYLINDER RPL-BY...	12									190	
					2810-034-3711											
P	D		2810-034-3711	149119Y1 <66640>	..BUSHING,SLEEVE RPLS--.....	12	EA		1					*	190	39
					2810-445-1509											
P	D		2810-479-1110	5044H3 <66640>	..BUSHING,BLIND SCREW-0.003..	12	EA		AR					*	190	
					IN.OVERSIZE ON OD											
P	D		2810-479-1111	5044S3 <66640>	..BUSHING,BLIND SCREW-0.007..	12	EA		AR					*	190	
					IN.OVERSIZE ON OD											
P	D		2810-335-6401	5044J3 <66640>	..BUSHING,BLIND SCREW-0.012..	12	EA		AR					*	190	
					IN.OVERSIZE ON OD											
X1				147470 <66640>	..HEAD,CYLINDER.....	12	EA		1						190	
			5330-599-3052	2083D100 <66640>	.PACKING,PREFORMED.....	12									190	
					RPL-BY 5330-599-0047											
P	F		5330-599-0047	2083D259 <66640>	.PACKING,PREFORMED.....	12	EA		9	2	6	12		*	190	40
					RPLS-- 5330-599-3052											
P	D		2810-570-2780	AN4076-1 <88044>	.ADAPTER,CYLINDER HEAD.....	12	EA		9	2	2	4		*	190	41
AD	D			433578 <66640>	.PISTON AND RING ASSEMBLY....	12	EA		5						190	
					U/O CYLINDERS NO.1,2,3,8,											
					& 9											
AD	D			434141 <66640>	.PISTON AND RING ASSEMBLY....	12	EA		4						190	
			2810-294-3493	139619 <66640>	..RING,PISTON.....	12									190	

(1) SOURCE, MAINT AND REC CODE (a) SOURCE CODE	(b) MAINT LEVEL	(c) REC CODE	(2) FEDERAL STOCK NUMBER	REFERENCE NUMBER	(3) DESCRIPTION	MODELS USABLE ON CH-34C	(4) UNIT OF ISSUE	(5) QTY INC IN UNIT PACK	(6) QTY INC IN UNIT	(7) 30-DAY DS/GS MAINT ALW (a) 1-20	(b) 21-50	(c) 51-100	(8) 1-YR ALW PER 100 EQUIP CNTGCY	(9) DEPOT MAINT ALW PER 100 EQUIP	(10) ILLUSTRATION (a) FIG NO	(b) ITEM NO
					CONTINUED										190	
					RPL-BY 2810-580-1094											
P	D		2810-580-1094	147637 <66640>	..RING,PISTON-GROOVE NO.1&2..	12	EA		2					*	190	42
					RPLS-- 2810-294-3493											
P	D		2810-580-1093	147637Y1 <66640>	..RING,PISTON-0.015 IN.....	12	EA		AR					*	190	
					OVERSIZE ON W											
P	D		2810-580-1092	147637Y2 <66640>	..RING,PISTON-0.030 IN.....	12	EA		AR					*	190	
					OVERSIZE ON W											
P	D		2810-580-1091	147637Y3 <66640>	..RING,PISTON-0.045 IN.....	12	EA		AR					*	190	
					OVERSIZE ON W											
			2810-294-3107	139619Y3 <66640>	..RING,PISTON RPL-BY.....	12									190	
					2810-580-1097											
P	D		2810-580-1097	147637Y4 <66640>	..RING,PISTON-0.060 IN.....	12	EA		AR					*	190	
					OVERSIZE ON W RPLS--											
					2810-294-3107											
P	D		2810-580-1096	147637Y5 <66640>	..RING,PISTON-0.075 IN.....	12	EA		AR					*	190	
					OVERSIZE ON W											
P	D		2810-580-1098	147637Y6 <66640>	..RING,PISTON-0.090 IN.....	12	EA		AR					*	190	
					OVERSIZE ON W											
			2810-294-3124	139619Y7 <66640>	..RING,PISTON,.....	12									190	
					RPL-BY 2810-580-1095											
P	D		2810-580-1095	147637Y7 <66640>	..RING,PISTON 0.105 IN.....	12	EA		AR					*	190	
					OVERSIZE ON W RPLS--											
					2810-294-3124											
			2810-294-3117	139619Y6 <66640>	..RING,PISTON,.....	12									190	
					RPL-BY 2810-618-5679											
P	D		2810-618-5679	147637Y8 <66640>	..RING,PISTON-0.120 IN.....	12	EA		AR					*	190	
					OVERSIZE ON W											
					RPLS-- 2810-294-3117											
			2810-618-5678	147637Y9 <66640>	..RING,PISTON-0.135 IN.....	12	EA		AR						190	
					OVERSIZE ON W USE UNTIL											
					EXHAUSTED,NO REPLACEMENT											
P	D		2810-118-6979	68498 <66640>	..RING,PISTON-GROOVE NO.3,...	12	EA		3					*	190	43
					4,&5											
P	D		2810-118-6980	68498Y1 <66640>	..RING,PISTON-0.002 IN.....	12	EA		AR					*	190	
					OVERSIZE ON W											
P	D		2810-118-6981	68498Y2 <66640>	..RING,PISTON-0.004 IN.....	12	EA		AR					*	190	
					OVERSIZE ON W											
P	D		2810-118-6982	68498Y3 <66640>	..RING,PISTON-0.006 IN.....	12	EA		AR					*	190	
					OVERSIZE ON W											
P	D		2810-605-8930	146209 <66640>	..PISTON,INTERNAL.....	12	EA		1					*	190	44
					COMBUSTION-CYLINDERS NO.											
					1,2,3,8&9											
P	D		2810-069-3342	149453 <66640>	..PISTON,INTERNAL COMBUSTION.	12	EA		1					*	190	45
					ENGINE-CYLINDERS NO.4,5,											
					6 & 7											
AD	D			432932 <66640>	.PIN AND PLUG ASSEMBLY,.....	12	EA		1						190	
P	D		2810-719-7617	147817 <66640>	..PLUG,PISTON PIN.....	12	EA		9					*	190	46
			2810-203-8536	138733 <66640>	..PIN,PISTON.....	12									190	
					RPL-BY 2810-623-3767											
P	D		2810-623-3767	147183 <66640>	..PIN,PISTON.....	12	EA		1					*	190	47
P	D		2810-217-3714	428251 <66640>	.COVER AND BUSHING-EXHAUST...	12	EA		2	*	2	2		*	190	48

(1) SOURCE, MAINT AND REC CODE (a) SOURCE CODE	(b) MAINT LEVEL	(c) REC CODE	(2) FEDERAL STOCK NUMBER	REFERENCE NUMBER	(3) DESCRIPTION	MODELS USABLE ON CH-34C	(4) UNIT OF ISSUE	(5) QTY INC IN UNIT PACK	(6) QTY INC IN UNIT	(7) 30-DAY DS GS MAINT ALW (a) 1-20	(b) 21-50	(c) 51-100	(8) 1-YR ALW PER 100 EQUIP CNTGCY	(9) DEPOT MAINT ALW PER 100 EQUIP	(10) ILLUSTRATION (a) FIG NO	(b) ITEM NO
					CONTINUED										190	48
					CYLINDER NO.1&2											
P	O		2810-217-3718	428301 <66640>	.COVER AND BUSHING ASSEMBLY..	12	EA		6	*	*	2		*	190	49
					EXHAUST CYLINDER NO.3,4,5, 7,8,&9											
P	O		2810-215-9682	430040 <66640>	.COVER AND BUSHING ASSEMBLY..	12	EA		1	*	*	*		*	190	50
					EXHAUST CYLINDER NO.6											
P	O		2810-217-3715	428252 <66640>	.COVER AND BUSHING ASSEMBLY..	12	EA		2	*	*	2		*	190	51
					INTAKE CYLINDER NO.1&9											
P	O		2810-217-3717	428300 <66640>	.COVER AND BUSHING ASSEMBLY..	12	EA		6	*	*	2		*	190	52
					INTAKE CYLINDER NO.2,3,4, 6,7,&8											
P	O		2810-217-3735	430033 <66640>	.COVER AND SUMP ASSEMBLY.....	12	EA		1	*	*	*		*	190	53
					INTAKE CYLINDER NO.5											
					ATTACHING PARTS											
			5310-167-1344	AN315-4R <88044>	.NUT,PLAIN,HEXAGON.....	12	HD		108	*	*	*		*	190	54
			5310-167-0667	MS35337-44 <96906>	.WASHER,LOCK.....	12	HD		108	*	*	*		*	190	55
					---*---											
X1				110356 <66640>	..BUSHING,ROCKER BOX COVER...	12	EA		6						190	56
P	D		2810-555-6533	110356Y1 <66640>	..BUSHING,SLEEVE-0.010 IN....	12	EA		AR					*	190	
					OVERSIZE ON OD											
P	O		2810-217-3674	138942 <66640>	..CONNECTOR,ROCKER BOX.....	12	EA		1	*	*	2		*	190	57
					SCAVENGE											
P	O		2810-217-3671	138896 <66640>	..CONNECTOR,ROCKER BOX,SUMP..	12	EA		1	*	*	*		*	190	58
P	O		2810-076-6042	138896Y1 <66640>	..CONNECTOR,ROCKER BOX,SUMP..	12	EA		AR	*	*	*		*	190	
					0.003 IN.OVERSIZE ON OD											
P	D		4730-293-7992	2132D5 <66640>	..PLUG,PIPE.....	12	EA		1					*	190	59
P	F		5340-595-0636	5042H2 <66640>	..INSERT,SCREW THREAD.....	12	EA		AR	*	*	*		*	190	60
P	F		5340-595-0637	5042S2 <66640>	..INSERT,SCREW THREAD.....	12	EA		AR	*	*	*		*	190	
P	F		5340-386-4441	5042J2 <66640>	..INSERT,SCREW THREAD.....	12	EA		AR	*	*	*		*	190	
			2810-310-8837	130413 <66640>	.GASKET.....	12									190	
					RPL-BY 2810-303-7774											
P	O		2810-303-7774	138861 <66640>	.GASKET-ROCKER BOX COVER.....	12	EA		18	11	28	56		*	190	61
					RPLS-- 2810-310-8837, 2810-697-4696											
P	O		2810-575-3051	171804 <66640>	.BRACKET SUPPORT BOX.....	12	EA		1	*	*	*		*	190	62
					ATTACHING PARTS											
			5306-282-3342	AN102906 <88044>	.BOLT,MACHINE.....	12	EA		2	*	*	*		*	190	63
			5310-194-0637	MS9320-10 <96906>	.WASHER,FLAT.....	12	EA		2	*	*	*		*	190	64
			5306-147-9494	AN103006 <88044>	.BOLT,MACHINE.....	12	EA		2	*	*	*		*	190	65
			5310-194-0636	MS9320-11 <96906>	.WASHER,FLAT.....	12	EA		2	*	*	*		*	190	66
					---*---											
			5340-597-8584	139213N1 <66640>	.CLAMP ASSEMBLY.....	12									190	
					RPL-BY 2810-651-1292											
P	O		2810-651-1292	432195 <66640>	.CLAMP ASSEMBLY.....	12	EA		9	3	7	13		*	190	67
					RPLS-- 5340-597-8584											
					ATTACHING PARTS											
P	O		5310-275-0787	6085D5 <66640>	.NUT,SELF-LOCKING,HEXAGON....	12	EA		9	30	74	149		*	190	68
P	O		5306-531-9600	468D25 <66640>	.BOLT,SHOULDER.....	12	EA		9	28	70	139		*	190	69
					---*---											

(1) SOURCE, MAINT AND REC CODE (a) SOURCE CODE	(b) MAINT LEVEL	(c) REC CODE	(2) FEDERAL STOCK NUMBER	REFERENCE NUMBER	(3) DESCRIPTION	MODELS USABLE ON CH-34C	(4) UNIT OF ISSUE	(5) QTY INC IN UNIT PACK	(6) QTY INC IN UNIT	(7) 30-DAY DS/GS MAINT ALW (a) 1-20	(b) 21-50	(c) 51-100	(8) 1-YR ALW PER 100 EQUIP CNTGCY	(9) DEPOT MAINT ALW PER 100 EQUIP	(10) ILLUSTRATION (a) FIG NO	(b) ITEM NO
					VALVE MECHANISM SEE FIG..... 183A FOR NHA	12			1						190A	
			5315-236-8359	MS24665-370 <96906>	.PIN,COTTER.....	12	HD		18	*	*	*		*	190A	1
P	F		5310-148-8824	65679 <66640>	.NUT,CASTELLATED,HEXAGON.....	12	EA		18	*	2	2		*	190A	2
P	F		2810-306-6124	65678 <66640>	.SHAFT,ROCKER ENGINE.....	12	EA		18	4	9	18		*	190A	3
P	F		5310-151-3966	2093D18 <66640>	.WASHER,CONVEX.....	12	EA		36	*	*	*		*	190A	4
			5330-260-9275	68816 <66640>	.PACKING,PREFORMED..... RPL-BY 2810-722-0104	12									190A	
P	F		2810-722-0104	2083D249 <66640>	.PACKING,PREFORMED RPLS--... 5330-260-9275	12	EA		36	16	40	79		*	190A	5
P	F		2810-091-5684	428414 <66640>	.ARM ASSEMBLY,COMPLETE-..... INTAKE	12	EA		9	*	*	*		*	190A	6
			2810-217-3737	891279 <66640>	.ARM ASSEMBLY,COMPLETE..... EXHAUST RPL-BY 2810-091-5683	12									190A	
P	F		2810-091-5683	428403 <66640>	.ARM ASSEMBLY,COMPLETE-..... EXHAUST RPLS-- 2810-217-3737	12	EA		1	*	2	2		*	190A	7
			5315-282-7245	29D11 <66640>	..PIN,STRAIGHT,HEADLESS..... RPL-BY 5315-282-6792	12									190A	
P	D		5315-282-6792	68 <77445>	..PIN,STRAIGHT,HEADLESS..... RPLS-- 5315-282-7245	12	EA		1					*	190A	8
P	D		2810-118-7662	23065 <66640>	..ROLLER,LINEAR ROTARY MOTION	12	EA		18					*	190A	9
P	D		2810-149-7053	23066 <66640>	..HUB-ROCKER ARM ROLLER.....	12	EA		1					*	190A	10
P	F		5305-297-2527	136313 <66640>	..SETSCREW.....	12	EA		1	*	2	2		*	190A	11
P	F		5305-302-8639	170227 <66640>	..SCREW,VALVE CLEARANCE..... ADJUSTER	12	EA		1	*	2	2		*	190A	12
X1				428413 <66640>	..ARM AND BUSHING ASSEMBLY... INTAKE VALVE	12	EA		1						190A	
X1				428402 <66640>	..ROCKER ARM,ENGINE POPPET... VALVE	12	EA		1						190A	
P	D		2810-662-2987	2119D1 <66640>	...BEARING,SLEEVE.....	12	EA		18					*	190A	13
P	F		5310-090-4606	139152 <66640>	.WASHER,ROCKER ARM.....	12	EA		18	*	2	2		*	190A	14
P	F		2810-217-3681	139153 <66640>	.SPACER,ROCKER ARM.....	12	EA		18	*	2	2		*	190A	15
P	D		2810-293-5578	171163 <66640>	.LOCK,VALVE SPRING RETAINER..	12	EA		4					*	190A	16
P	D		5310-347-9986	170268 <66640>	.WASHER,SHOULDER RECESSED....	12	EA		2					*	190A	17
P	D		2810-911-8046	147862 <66640>	.SPRING,VALVE,INNER.....	12	EA		18					*	190A	18
P	D		2810-911-8047	147864 <66640>	.SPRING,VALVE,OUTER.....	12	EA		18					*	190A	19
P	D		5310-596-7582	171983 <66640>	.WASHER,FLAT.....	12	EA		9					*	190A	20
			2810-294-3051	138874 <66640>	.VALVE,POPPET,ENGINE..... RPL-BY 2810-573-4038	12									190A	
			2810-939-7695	149195 <66640>	.VALVE,INTAKE RPL-BY..... 2810-573-4038	12									190A	
P	D		2810-573-4038	149458 <66640>	.VALVE,INTAKE RPLS..... 2810-294-3051 & 2810-939-7695	1	EA		9					*	190A	21
			2810-294-3052	138875 <66640>	.VALVE,POPPET,ENGINE..... RPL-BY 2810-640-8352	12									190A	
P	D		2810-640-8352	145902 <66640>	.VALVE,POPPET,ENGINE-EXHAUST. RPLS--2810-294-3052	12	EA		9					*	190A	22
P	F		2810-118-8183	416453 <66640>	.ROD ASSEMBLY.....	12	EA		18	*	2	2		*	190A	23
P	F		2810-306-6077	426951 <66640>	.HOUSING ASSEMBLY,PUSH ROD...	12	EA		1	2	2	3		*	190A	24

(1) SOURCE MAINT AND REC CODE (a) SOURCE	(b) MAINT	(c) REC	(2) FEDERAL STOCK NUMBER	REFERENCE NUMBER	(3) DESCRIPTION	MODELS USABLE ON CH-34C	(4) UNIT OF ISSUE	(5) QTY INC IN UNIT PACK	(6) QTY INC IN UNIT	(7) 30-DAY DS GS MAINT ALW (a) 1-20	(b) 21-50	(c) 51-100	(8) 1-YR ALW PER 100 EQUIP CNTGCY	(9) DEPOT MAINT ALW PER 100 EQUIP	(10) ILLUSTRATION (a) FIG NO	(b) ITEM NO
P	F		5310-533-8452	135657	<66640> .NUT,CONNECTION,PUSH ROD.....	12	EA		18	*	2	2		*	190A	25
P	F		5330-599-8170	138043	<66640> .WASHER,NONMETALLIC.....	12	EA		18	5	14	27		*	190A	26
P	F		5330-599-8208	37D129	<66640> .WASHER,NONMETALLIC.....	12	EA		36	14	36	72		*	190A	27
P	F		5310-512-9696	130344	<66640> .NUT,PUSH ROD.....	12	EA		18	*	2	2		*	190A	28
P	F		2810-478-9562	130343	<66640> .RING,PUSH ROD.....	12	EA		2	3	6	13		*	190A	29
P	F		2810-306-5870	131717	<66640> .ADAPTER,VALVE TAPPET GUIDE.. INTAKE	12	EA		1	*	*	*		*	190A	30
P	F		2810-306-5871	131718	<66640> .ADAPTER VALVE TAPPET GUIDE.. EXHAUST	12	EA		1	*	*	*		*	190A	31
					ATTACHING PARTS											
			5310-903-8282	MS21083N4	<96906> .NUT,SELF-LOCKING,HEXAGON....	12	EA		36	*	*	*		*	190A	32
			5310-194-0637	MS9320-10	<96906> .WASHER,FLAT.....	12	EA		36	*	*	*		*	190A	33
					---*---											
P	F		2810-310-8849	136460	<66640> .GASKET,HOUSING ADAPTER..... PUSH ROD	12	EA		2	2	2	5		*	190A	34
P	D		2810-594-1508	146484	<66640> .GUIDE,VALVE TAPPET.....	12	EA		1					*	190A	35
P	F		2810-310-8848	136459	<66640> .GASKET,VALVE TAPPET GUIDE...	12	EA		1	2	5	11		*	190A	36
P	D		2810-512-9709	131049	<66640> .SOCKET,VALVE TAPPET BALL....	12	EA		2					*	190A	37
P	D		2810-292-3630	64962	<66640> .SPRING,HELICAL,COMPRESSION..	12	EA		2					*	190A	38
P	D		2810-694-0125	126288	<66640> .TAPPET,VALVE.....	12	EA		1					*	190A	39
P	D		5315-149-0115	131422	<66640> .PIN,SHOULDER,HEADLESS.....	12	EA		18					*	190A	40
			2810-555-7021	147109	<66640> .ROLLER,ROCKER ARM-CAM..... FOLLOWER	12	EA								190A	
					RPL-BY 2810-052-4358											
P	D		2810-052-4358	149416	<66640> .ROLLER,TAPPET VALVE..... RPLS-- 2810-555-7021	12	EA		1					*	190A	41
			2810-479-1204	64730	<66640> .BEARING,SLEEVE RPL-BY..... 2810-440-4372	12									190A	
P	D		2810-440-4372	135189	<66640> .BEARING,SLEEVE RPLS--..... 2810-479-1204	12	EA		1					*	190A	42
P	D		2810-727-5697	135189Y2	<66640> .BEARING,SLEEVE.....	12	EA		AR					*	190A	
					DEFLECTOR ASSEMBLY,CYLINDER.. EXHAUST AND INTAKE SEE FIG.183A FOR NHA	12			1						191	
			2810-215-9648	428589N1	<66640> .DEFLECTOR ASSEMBLY..... RPL-BY 2810-609-0433	12									191	
P	O	R	2810-609-0433	428589N6	<66640> .DEFLECTOR ASSEMBLY-INTAKE... NO.1,3,4,6,7,8,&9 RPLS-- 2810-215-9648	12	EA		7	*	2	2		*	191	1
			2810-215-9649	428589N4	<66640> .DEFLECTOR ASSEMBLY..... RPL-BY 2810-609-0434	12									191	
P	O	R	2810-609-0434	428589N7	<66640> .DEFLECTOR ASSEMBLY-INTAKE... NO.2 RPLS-- 2810-215-9649	12	EA		1	*	*	2		*	191	2
					ATTACHING PARTS											
			5306-285-5505	AN101108	<88044> .BOLT,MACHINE.....	12	HD		8	*	*	*		*	191	3

(1) SOURCE, MAINT AND REC CODE (a) SOURCE CODE	(b) MAINT LEVEL	(c) REC CODE	(2) FEDERAL STOCK NUMBER	REFERENCE NUMBER		(3) DESCRIPTION	MODELS USABLE ON CH-34C	(4) UNIT OF ISSUE	(5) QTY INC IN UNIT PACK	(6) QTY INC IN UNIT	(7) 30-DAY DS/GS MAINT ALW (a) 1-20	(b) 21-50	(c) 51-100	(8) 1-YR ALW PER 100 EQUIP CNTGCY	(9) DEPOT MAINT ALW PER 100 EQUIP	(10) ILLUSTRATION (a) FIG NO	(b) ITEM NO
			5310-167-0667	MS35337-44	<96906>	.WASHER,LOCK.....	12	HD		8	*	*	*		*	191	4
						---*---											
			5325-263-6632	MS35489-6	<96906>	..GROMMET,RUBBER.....	12	HD		2	*	*	*		*	191	5
P	F		5325-285-2804	483548-711	<79089>	..STUD,TURNLOCK FASTENER.....	12	EA		2	*	*	*		*	191	6
P	O		2810-118-6917	112883	<66640>	..BUTTON.....	12	EA		1	*	*	2		*	191	7
P	O		2810-478-8920	113394	<66640>	..GROMMET,CYLINDER AIR..... DEFLECTOR	12	EA		3	*	*	*		*	191	8
P	F		2810-097-4283	139467	<66640>	..BRACKET,INTERCYLINDER..... ATTACHING PARTS	12	EA		1	*	*	*		*	191	9
			5320-994-7076	MS20613-4P4	<96906>	..RIVET,SOLID.....	12	LB		1	*	*	*		*	191	10
			5320-753-3830	MS20613-4P5	<96906>	..RIVET,SOLID.....	12	LB		1	*	*	*		*	191	11
						---*---											
P	F		2810-512-9757	133573	<66640>	..PLATE,CYLINDER,AIR..... DEFLECTOR ATTACHING PARTS	12	EA		1	*	*	*		*	191	12
			5320-994-7076	MS20613-4P4	<96906>	..RIVET,SOLID.....	12	LB		1	*	*	*		*	191	13
						---*---											
			2810-048-8139	132365N76	<66640>	..SEAL,CYLINDER..... RPL-BY 2810-609-0435	12									191	
P	F		2810-609-0435	145633N3	<66640>	..SEAL,CYLINDER RPLS--..... 2810-048-8139,	12	EA		1	2	4	8		*	191	14
P	F		2810-097-4282	139465	<66640>	..BRACKET,INTERCYLINDER AIR.. DEFLECTOR ATTACHING PARTS	12	EA		1	*	*	*		*	191	15
			5320-753-3830	MS20613-4P5	<96906>	..RIVET,SOLID.....	12	LB		2	*	*	*		*	191	16
						---*---											
P	F		2810-217-3680	139143	<66640>	..CLAMP-CYLINDER AIR..... DEFLECTOR ATTACHING PARTS	12	EA		1	*	*	*		*	191	17
			5320-994-7076	MS20613-4P4	<96906>	..RIVET,SOLID.....	12	LB		3	*	*	*		*	191	18
						---*---											
P	F		5340-025-7038	138233	<66640>	..STRAP,RETAINING..... ATTACHING PARTS	12	EA		1	*	*	*		*	191	19
			5320-994-7076	MS20613-4P4	<96906>	..RIVET,SOLID.....	12	LB		2	*	*	*		*	191	20
						---*---											
P	O	R	2810-523-3112	429852	<66640>	.DEFLECTOR ASSEMBLY,..... CYLINDER,AIR EXHAUST-NO.1, 2,3,4,5,6,7,8,&9 ATTACHING PARTS	12	EA		8	*	2	2		*	191	21
			5306-285-5505	AN101108	<88044>	.BOLT,MACHINE.....	12	HD		8	*	*	*		*	191	22
			5310-167-0667	MS35337-44	<96906>	.WASHER,LOCK.....	12	HD		8	*	*	*		*	191	23
						---*---											
			5310-281-9159	AN122579	<88044>	..WASHER,THRUST.....	12	EA		1	*	*	*		*	191	
			5325-263-6632	MS35489-6	<96906>	..GROMMET,RUBBER.....	12	HD		1	*	*	*		*	191	24
P	F		5325-285-2804	483548-711	<79089>	..STUD,TURNLOCK FASTENER.....	12	EA		2	*	*	*		*	191	25
P	O		2810-118-6917	112883	<66640>	..BUTTON.....	12	EA		1	*	*	REF		*	191	26
P	O		2810-478-8920	113394	<66640>	..GROMMET,CYLINDER AIR..... DEFLECTOR	12	EA		3	*	*	*		*	191	27
P	F		2810-215-9627	139479	<66640>	..BRACKET,INTERCYLINDER..... ATTACHING PARTS	12	EA		1	*	*	*		*	191	28
			5320-753-3830	MS20613-4P5	<96906>	..RIVET,SOLID.....	12	LB		2	*	*	*		*	191	29
			5310-167-0816	AN960-6	<88044>	..WASHER,FLAT.....	12	HD		1	*	*	*		*	191	30

(1) SOURCE, MAINT AND REC CODE (a) SOURCE CODE	(b) MAINT LEVEL	(c) REC CODE	(2) FEDERAL STOCK NUMBER	REFERENCE NUMBER	(3) DESCRIPTION	MODELS USABLE ON CH-34C	(4) UNIT OF ISSUE	(5) QTY INC IN UNIT PACK	(6) QTY INC IN UNIT	(7) 30-DAY DS GS MAINT ALW (a) 1-20	(b) 21-50	(c) 51-100	(8) 1-YR ALW PER 100 EQUIP CNTGCY	(9) DEPOT MAINT ALW PER 100 EQUIP	(10) ILLUSTRATION (a) FIG NO	(b) ITEM NO
					CONTINUED ---*---										191	30
P	F		2810-512-9757	133573 <66640>	..PLATE,CYLINDER,AIR..... DEFLECTOR ATTACHING PARTS	12	EA		1	*	*	*		*	191	31
			5320-994-7076	MS20613-4P4 <96906>	..RIVET,SOLID.....	12	LB		1	*	*	*		*	191	32
					---*---											
P	F		2810-217-3679	139142 <66640>	..CLAMP-CYLINDER AIR..... DEFLECTOR ATTACHING PARTS	12	EA		1	*	2	2		*	191	33
			5320-994-7076	MS20613-4P4 <96906>	..RIVET,SOLID.....	12	LB		4	*	*	*		*	191	34
					---*---											
P	F		5340-025-7038	138233 <66640>	..STRAP,RETAINING..... ATTACHING PARTS	12	EA		1	*	*	*		*	191	35
			5320-994-7076	MS20613-4P4 <96906>	..RIVET,SOLID.....	12	LB		2	*	*	*		*	191	36
					---*---											
			5340-515-2806	139070 <66640>	.SPRING,CYLINDER,CLAMP..... RPL-BY 2810-797-1594	12									191	
P	O		2810-797-1594	148121 <66640>	.SPRING,CYLINDER,CLAMP..... RPLS-- 5340-515-2806	12	EA		9	2	4	9		*	191	37
P	O		2810-346-1435	428590N3 <66640>	DEFLECTOR ASSEMBLY,..... INTERCYLINDER AIR-NO.1-2, 3-4,4-5,6-7,7-8,8-9,&9-1 SEE FIG.183A FOR NHA	12	EA		1	*	REF	REF		*	192	1
P	F		2810-084-3314	2112D1 <66640>	.SPRING,INTERCYLINDER..... ATTACHING PARTS	12	EA		2	2	2	3		*	192	2
			5320-291-0419	AN125589 <88044>	.RIVET,SOLID.....	12	EA		4	*	*	*		*	192	3
					---*---											
P	F		2810-343-9278	145629 <66640>	.BRACE,INTERCYLINDER AIR..... DEFLECTOR ATTACHING PARTS	12	EA		1	*	*	*		*	192	4
			5320-994-7076	MS20613-4P4 <96906>	.RIVET,SOLID.....	12	LB		3	*	*	*		*	192	5
					---*---											
P	F		2810-084-3314	2112D1 <66640>	.SPRING,INTERCYLINDER..... ATTACHING PARTS	12	EA		1	REF	REF	REF		*	192	6
			5320-291-0419	AN125589 <88044>	.RIVET,SOLID.....	12	EA		2	*	*	*		*	192	7
					---*---											
P	O		2810-322-4216	430523 <66640>	.BRACKET ASSEMBLY,..... INTERCYLINDER ATTACHING PARTS	12	EA		1	*	*	*		*	192	8
			5320-994-7076	MS20613-4P4 <96906>	.RIVET,SOLID.....	12	LB		2	*	*	*		*	192	9
					---*---											
P	F		2810-327-6962	171407 <66640>	..PAD,INTERCYLINDER AIR..... DUCT ATTACHING PARTS	12	EA		1	*	*	*		*	192	10
			5320-270-2772	MS20613-4P6 <96906>	..RIVET,SOLID.....	12	LB		2	*	*	*		*	192	11

(1) SOURCE, MAINT AND REC CODE (a) SOURCE CODE	(b) MAINT LEVEL	(c) REC CODE	(2) FEDERAL STOCK NUMBER	REFERENCE NUMBER		(3) DESCRIPTION	MODELS USABLE ON CH-34C	(4) UNIT OF ISSUE	(5) QTY INC IN UNIT PACK	(6) QTY INC IN UNIT	(7) 30-DAY DS/GS MAINT ALW (a) 1-20	(b) 21-50	(c) 51-100	(8) 1-YR ALW PER 100 EQUIP CNTGCY	(9) DEPOT MAINT ALW PER 100 EQUIP	(10) ILLUSTRATION (a) FIG NO	(b) ITEM NO
			5310-167-0816	AN960-6	<88044>	..WASHER,FLAT.....	12	HD		2	*	*	*		*	192	12
						---*---											
P	F		2810-217-3684	139452	<66640>	.STRIP,INTERCYLINDER.....	12	EA		1	*	*	*		*	192	
			2810-048-8137	132365N73	<66640>	.SEAL,CYLINDER.....	12									192	
						OBS-BY 9320-171-4850											
P	F		9320-171-4850	145633N1	<66640>	.RUBBER,SPECIAL SHAPED.....	12	EA		1	*	*	*		*	192	13
						SECTION											
			2810-674-2762	132365N77	<66640>	.SEAL,CYLINDER AIR.....	12									192	
						RPL-BY 9320-171-4583											
P	F		9320-171-4583	145633N2	<66640>	.RUBBER,SPECIAL SHAPED.....	12	EA		1	*	2	2		*	192	14
						SECTION											
						RPLS-- 2810-674-2762											
				AV132365N82	<91547>	.RUBBER,SPECIAL SHAPED.....	12									192	
						RPL-BY 2810-048-8145											
P	F		2810-048-8145	132365N82	<66640>	.RUBBER,SPECIAL SHAPED.....	12	EA		1	*	*	*		*	192	15
						ATTACHING PARTS											
			5320-270-2772	MS20613-4P6	<96906>	.RIVET,SOLID.....	12	LB		2	*	*	*		*	192	16
P	F		2810-048-9100	170426	<66640>	.SEAL STRIP,INTERCYLINDER....	12	EA		1	*	*	*		*	192	17
						---*---											
P	F		2810-575-6604	139449	<66640>	.PAD,AIR DUCT SEAL.....	12	EA		1	*	*	*		*	192	18
						ATTACHING PARTS											
			5320-270-2772	MS20613-4P6	<96906>	.RIVET,SOLID.....	12	LB		5	*	*	*		*	192	19
			5310-167-0816	AN960-6	<88044>	.WASHER,FLAT.....	12	HD		5	*	*	*		*	192	20
P	F		2810-315-7910	171024	<66640>	.SEAL STRIP,INTERCYLINDER....	12	EA		1	*	*	*		*	192	21
						---*---											
MF	F			145631	<66640>	.COVER,INTERCYLINDER...NOTE 1	12	EA		1						192	22
MF	F			145630	<66640>	.COVER,INTERCYLINDER...NOTE 1	12	EA		1						192	23
						ATTACHING PARTS											
			5305-282-3861	AN117005	<88044>	.SCREW,MACHINE.....	12	EA		8	*	*	*		*	192	24
			5310-811-3494	MS21044N08	<96906>	.NUT,SELF-LOCKING,HEXAGON....	12	EA		1	*	*	*		*	192	25
						---*---											
X1				145632	<66640>	.PLATE,INTERCYLINDER.....	12	EA		1						192	26
						ATTACHING PARTS											
			5320-234-8570	MS20470A4-20	<96906>	.RIVET,SOLID.....	12	LB		11	*	*	*		*	192	27
						---*---											
						NOTE 1											
						MAKEFR											
						AR 9535-554-1417 AL ALLY SH											
P	O	R	2810-602-6537	428590N4	<66640>	DEFLECTOR ASSEMBLY,.....	12	EA		1	*	REF	REF		*	193	1
						INTERCYLINDER-NO.2-3 SEE											
						FIG.183A FOR NHA											
						ATTACHING PARTS											
			5310-903-8282	MS21083N4	<96906>	.NUT,SELF-LOCKING,HEXAGON....	12	EA		1	*	*	*		*	193	2
P	O		5310-274-4551	34D241	<66640>	.WASHER,FLAT.....	12	EA		1	*	*	*		*	193	3
						---*---											
P	F		2810-084-3314	2112D1	<66640>	.SPRING,INTERCYLINDER.....	12	EA		2	REF	REF	REF		*	193	4

(1) SOURCE, MAINT AND REC CODE (a) SOURCE CODE	(b) MAINT LEVEL	(c) REC CODE	(2) FEDERAL STOCK NUMBER	REFERENCE NUMBER	(3) DESCRIPTION	MODELS USABLE ON CH-34C	(4) UNIT OF ISSUE	(5) QTY INC IN UNIT PACK	(6) QTY INC IN UNIT	(7) 30-DAY DS/GS MAINT ALW (a) 1-20	(b) 21-50	(c) 51-100	(8) 1-YR ALW PER 100 EQUIP CNTGCY	(9) DEPOT MAINT ALW PER 100 EQUIP	(10) ILLUSTRATION (a) FIG NO	(b) ITEM NO
					CONTINUED										193	4
					ATTACHING PARTS											
			5320-291-0419	AN125589 <88044>	.RIVET,SOLID.....	12	EA		4	*	*	*		*	193	5
					---*---											
P	F		2810-343-9278	145629 <66640>	.BRACE,INTERCYLINDER AIR..... DEFLECTOR	12	EA		1	*	*	*		*	193	6
					ATTACHING PARTS											
			5320-994-7076	MS20613-4P4 <96906>	.RIVET,SOLID.....	12	LB		3	*	*	*		*	193	7
					---*---											
X1				431011 <66640>	.BRACKET ASSEMBLY.....	12	EA		1						193	8
					ATTACHING PARTS											
			5320-291-0419	AN125589 <88044>	.RIVET,SOLID.....	12	EA		1	*	*	*		*	193	9
			5320-994-7076	MS20613-4P4 <96906>	.RIVET,SOLID.....	12	LB		2	*	*	*		*	193	10
					---*---											
			5306-285-5507	AN101113 <88044>	..BOLT,MACHINE.....	12	HD		1	*	*	*		*	193	11
P	F		2810-217-3684	139452 <66640>	.STRIP,INTERCYLINDER.....	12	EA		1	*	*	*		*	193	
P	F		9320-171-4850	145633N1 <66640>	.RUBBER,SPECIAL SHAPED..... SECTION	12	EA		1	*	*	*		*	193	12
P	F		9320-171-4583	145633N2 <66640>	.RUBBER,SPECIAL SHAPED..... SECTION	12	EA		1	*	REF	REF		*	193	13
P	F		2810-048-8145	132365N82 <66640>	.RUBBER,SPECIAL SHAPED.....	12	EA		1	*	*	*		*	193	14
					ATTACHING PARTS											
			5320-270-2772	MS20613-4P6 <96906>	.RIVET,SOLID.....	12	LB		2	*	*	*		*	193	15
P	F		2810-048-9100	170426 <66640>	.SEAL STRIP,INTERCYLINDER....	12	EA		1	*	*	*		*	193	16
					---*---											
P	F		2810-575-6604	139449 <66640>	.PAD,AIR DUCT SEAL.....	12	EA		1	*	*	*		*	193	17
					ATTACHING PARTS											
			5320-270-2772	MS20613-4P6 <96906>	.RIVET,SOLID.....	12	LB		5	*	*	*		*	193	18
			5310-167-0816	AN960-6 <88044>	.WASHER,FLAT.....	12	HD		5	*	*	*		*	193	19
P	F		2810-315-7910	171024 <66640>	.SEAL STRIP INTERCYLINDER....	12	EA		1	*	*	*		*	193	20
					---*---											
MF	F			145631 <66640>	.COVER,INTERCYLINDER...NOTE 1	12	EA		1						193	21
MF	F			145630 <66640>	.COVER,INTERCYLINDER...NOTE 1	12	EA		1						193	22
					ATTACHING PARTS											
			5305-282-3861	AN117005 <88044>	.SCREW,MACHINE.....	12	EA		8	*	*	*		*	193	23
			5310-811-3494	MS21044N08 <96906>	.NUT,SELF-LOCKING,HEXAGON....	12	EA		8	*	*	*		*	193	24
					---*---											
X1				145632 <66640>	.PLATE,INTERCYLINDER.....	12	EA		1						193	25
					ATTACHING PARTS											
			5320-234-8570	MS20470A4-20 <96906>	.RIVET,SOLID.....	12	LB		11					*	193	26
					---*---											
					NOTE 1											
					MAKEFR											
					AR 9535-554-1417 AL ALLY SH											
P	O		2810-018-4007	433621 <66640>	CHANNEL ASSEMBLY-COWL SEAL... SEE FIG. 183A FOR NHA	12	EA		1	REF	REF	REF		*	194	1

(1) SOURCE, MAINT AND REC CODE (a) SOURCE CODE	(b) MAINT LEVEL	(c) REC CODE	(2) FEDERAL STOCK NUMBER	REFERENCE NUMBER		(3) DESCRIPTION	MODELS USABLE ON CH-34C	(4) UNIT OF ISSUE	(5) QTY INC IN UNIT PACK	(6) QTY INC IN UNIT	(7) 30-DAY DS/GS MAINT ALW (a) 1-20	(b) 21-50	(c) 51-100	(8) 1-YR ALW PER 100 EQUIP CNTGCY	(9) DEPOT MAINT ALW PER 100 EQUIP	(10) ILLUSTRATION (a) FIG NO	(b) ITEM NO
P	F		5325-285-2804	483548-711	<79089>	.STUD,TURNLOCK FASTENER.....	12	EA		1	*	*	*		*	194	2
			5325-263-6632	MS35489-6	<96906>	.GROMMET,RUBBER.....	12	HD		1	*	*	*		*	194	3
				AV132365N72	<91547>	.SEAL,COWL TO CYLINDER HEAD..	12									194	
						RPL-BY 2810-545-7859											
P	F		2810-545-7859	132365N72	<66640>	.SEAL,COWL TO CYLINDER HEAD..	12	EA		1	*	*	*		*	194	4
						AIR DEFLECTOR											
						ATTACHING PARTS											
			5320-234-8570	MS20470A4-20	<96906>	.RIVET,SOLID.....	12	LB		4	*	*	*		*	194	5
X2	F		2810-217-3682	139437	<66640>	.STRIP,COWL SEAL CHANNEL.....	12	EA		1	*	*	*		*	194	6
						---*---											
			2810-217-3678	139091	<66640>	.PLATE,COWL SEAL CHANNEL.....	12									194	
						HINGE OUTER											
						RPL-BY 2810-020-6370											
P	F		2810-020-6370	147999	<66640>	.PLATE,COWL SEAL CHANNEL.....	12	EA		1	*	2	2		*	194	7
						ATTACHING PARTS											
			5320-264-4266	AN124989	<88044>	.RIVET,SOLID.....	12	LB		6	*	*	*		*	194	8
						---*---											
			2810-217-3677	139090	<66640>	.PLATE,COWL SEAL CHANNEL,....	12									194	
						INNER HINGE											
						RPL-BY 2810-020-6369											
P	O		2810-020-6369	147998	<66640>	.PLATE,HINGE.....	12	EA		9	*	2	2		*	194	9
P	O		5315-663-2626	139092	<66640>	.PIN,GROOVED,HEADLESS.....	12	EA		9	*	*	*		*	194	10
			5340-803-7314	MS9013-02	<96906>	.RING,RETAINING.....	12	EA		18	*	*	*		*	194	11
P	O		2810-217-3724	428630	<66640>	.BRACKET ASSEMBLY-COWL SEAL..	12	EA		9	*	2	2		*	194	12
						CHANNEL <R1820-84C>											
						ATTACHING PARTS											
			5305-206-5949	AN115455	<88044>	.SCREW,MACHINE.....	12	HD		9	*	*	*		*	194	13
			5310-407-9566	MS35338-45	<96906>	.WASHER,LOCK.....	12	HD		9	*	*	*		*	194	14
						---*---											
P	F		2810-084-3314	2112D1	<66640>	.SPRING,INTERCYLINDER.....	12	EA		1	REF	REF	REF		*	194	15
						ATTACHING PARTS											
			5320-291-0419	AN125589	<88044>	.RIVET,SOLID.....	12	EA		2	*	*	*		*	194	16
						---*---											
						INTERCYLINDER AIR DEFLECTOR..	12			1						195	
						SEE FIG.183A FOR NHA											
			2810-215-9695	430071	<66640>	.DEFLECTOR ASSEMBLY.....	12									195	
						RPL-BY 2810-775-4303											
P	O	R	2810-775-4303	432699	<66640>	.DEFLECTOR ASSEMBLY-.....	12	EA		1	*	*	*		*	195	1
						CYLINDER NO.5-6											
						RPLS-- 2810-215-9695											
						ATTACHING PARTS											
			5306-285-5505	AN101108	<88044>	.BOLT,MACHINE.....	12	HD		2	*	*	*		*	195	2
			5310-407-9566	MS35338-45	<96906>	.WASHER,LOCK.....	12	HD		2	*	*	*		*	195	3
						---*---											
P	F		2810-092-1752	171805	<66640>	..BRACKET,ROCKER BOX SUMP....	12	EA		1	*	*	*		*	195	4
MF	F			171811	<66640>	..PAD,ROCKER BOX SUMP..NOTE 1	12	EA		1						195	5

(1) SOURCE, MAINT AND REC CODE (a) SOURCE CODE	(b) MAINT LEVEL	(c) REC CODE	(2) FEDERAL STOCK NUMBER	REFERENCE NUMBER		(3) DESCRIPTION	MODELS USABLE ON CH-34C	(4) UNIT OF ISSUE	(5) QTY INC IN UNIT PACK	(6) QTY INC IN UNIT	(7) 30-DAY DS GS MAINT ALW (a) 1-20	(b) 21-50	(c) 51-100	(8) 1-YR ALW PER 100 EQUIP CNTGCY	(9) DEPOT MAINT ALW PER 100 EQUIP	(10) ILLUSTRATION (a) FIG NO	(b) ITEM NO
						CONTINUED										195	5
						DEFLECTOR											
						ATTACHING PARTS											
			5320-994-7076	MS20613-4P4	<96906>	..RIVET,SOLID.....	12	LB		1	*	*	*		*	195	6
			5320-234-8570	MS20470A4-20	<96906>	..RIVET,SOLID.....	12	LB		7	*	*	*		*	195	7
			5310-167-0816	AN960-6	<88044>	..WASHER,FLAT.....	12	HD		7	*	*	*		*	195	8
						---*---											
P	F		2810-304-0038	171806	<66640>	.BRACKET,ROCKER BOX SUMP.....	12	EA		1	*	*	*		*	195	9
MF	F			171812	<66640>	..PAD,ROCKER BOX SUMP..NOTE 1	12	EA		1						195	10
						DEFLECTOR											
						ATTACHING PARTS											
			5320-234-8570	MS20470A4-20	<96906>	..RIVET,SOLID.....	12	LB		2	*	*	*		*	195	11
			5310-167-0816	AN960-6	<88044>	..WASHER,FLAT.....	12	HD		2	*	*	*		*	195	12
						---*---											
P	F		2810-512-9757	133573	<66640>	..PLATE,CYLINDER AIR.....	12	EA		2	*	*	*		*	195	13
						DEFLECTOR											
						ATTACHING PARTS											
			5320-753-3830	MS20613-4P5	<96906>	..RIVET,SOLID.....	12	LB		4	*	*	*		*	195	14
						---*---											
P	O		5330-712-0532	145633N4	<66640>	..SEAL,FRONT ROCKER BOX.....	12	EA		1	*	*	*		*	195	15
P	O		2810-478-8920	113394	<66640>	..GROMMET,CYLINDER AIR.....	12	EA		1	*	*	*		*	195	16
						DEFLECTOR											
X1				147839	<66640>	..DEFLECTOR.....	12	EA		1						195	
						NOTE 1											
						MAKEFR											
						AR 9535-288-0675 AL ALLY SH											
P	O	R	2810-215-9687	430049	<66640>	DEFLECTOR ASSEMBLY,SUMP-.....	12	EA		1	*	*	*		*	196	1
						LEFT HAND SEE FIG.183A FOR											
						NHA											
						ATTACHING PARTS											
			5306-282-3342	AN102906	<88044>	BOLT,MACHINE.....	12	EA		2	*	*	*		*	196	2
P	O		5310-148-4684	27D98	<66640>	WASHER,FLAT.....	12	EA		2	*	*	*		*	196	3
						---*---											
P	F		2810-332-6719	171762	<66640>	.SEAL,ROCKER BOX SUMP.....	12	EA		1	*	*	*		*	196	4
						DEFLECTOR											
						ATTACHING PARTS											
			5320-234-8570	MS20470A4-20	<96906>	.RIVET,SOLID.....	12	LB		2	*	*	*		*	196	5
P	F		2810-048-9152	171749	<66640>	.STRIP,SEAL.....	12	EA		1	*	*	*		*	196	6
						---*---											
P	F		2810-217-3687	139464	<66640>	.HOOK,CYLINDER AIR.....	12	EA		1	*	*	*		*	196	7
						DEFLECTOR											
						ATTACHING PARTS											
			5320-994-7076	MS20613-4P4	<96906>	.RIVET,SOLID.....	12	LB		2	*	*	*		*	196	8
						---*---											
P	O		2810-478-8920	113394	<66640>	.GROMMET,CYLINDER AIR.....	12	EA		1	*	*	*		*	196	9
						DEFLECTOR											

(1) SOURCE, MAINT AND REC CODE (a) SOURCE CODE	(b) MAINT LEVEL	(c) REC CODE	(2) FEDERAL STOCK NUMBER	REFERENCE NUMBER		(3) DESCRIPTION	MODELS USABLE ON CH-34C	(4) UNIT OF ISSUE	(5) QTY INC IN UNIT PACK	(6) QTY INC IN UNIT	(7) 30-DAY DS/GS MAINT ALW (a) 1-20	(b) 21-50	(c) 51-100	(8) 1-YR ALW PER 100 EQUIP CNTGCY	(9) DEPOT MAINT ALW PER 100 EQUIP	(10) ILLUSTRATION (a) FIG NO	(b) ITEM NO
P	O	R	2810-215-9686	430048	<66640>	DEFLECTOR ASSEMBLY,SUMP-..... RIGHT HAND SEE FIG.183A FOR NHA ATTACHING PARTS	12	EA		1	*	*	*		*	197	1
			5306-282-3342	AN102906	<88044>	BOLT,MACHINE.....	12	EA		2	*	*	*		*	197	2
P	O		5310-148-4684	27D98	<66640>	WASHER,FLAT..... ---*---	12	EA		2	*	*	*		*	197	3
P	F		2810-326-0364	171760	<66640>	.STRIP,CYLINDER..... ATTACHING PARTS	12	EA		1	*	*	*		*	197	4
			5320-234-8570	MS20470A4-20	<96906>	.RIVET,SOLID.....	12	LB		2	*	*	*		*	197	5
MF	F			171761	<66640>	.STRIP,CYLINDER AIR..... DEFLECTOR MAKEFR AR 9535-167-2278 AL ALLY SH ---*---	12	EA		1						197	6
P	F		2810-217-3687	139464	<66640>	.HOOK,CYLINDER AIR..... DEFLECTOR ATTACHING PARTS	12	EA		1	*	*	*		*	197	7
			5320-994-7076	MS20613-4P4	<96906>	.RIVET,SOLID..... ---*---	12	LB		2	*	*	*		*	197	8
P	O		2810-478-8920	113394	<66640>	.GROMMET,CYLINDER AIR..... DEFLECTOR	12	EA		1	*	*	*		*	197	9

(1) SOURCE, MAINT AND REC CODE (a) SOURCE CODE	(b) MAINT LEVEL	(c) REC CODE	(2) FEDERAL STOCK NUMBER	REFERENCE NUMBER	(3) DESCRIPTION	MODELS USABLE ON CH-34C	(4) UNIT OF ISSUE	(5) QTY INC IN UNIT PACK	(6) QTY INC IN UNIT	(7) 30-DAY DS/GS MAINT ALW (a) 1-20	(b) 21-50	(c) 51-100	(8) 1-YR ALW PER 100 EQUIP CNTGCY	(9) DEPOT MAINT ALW PER 100 EQUIP	(10) ILLUSTRATION (a) FIG NO	(b) ITEM NO
					SUPERCHARGER FRONT HOUSING... AND INTAKE PIPES SEE FIG. 183A FOR NHA	12			1						198	
P	D		2810-783-1524	432824 <66640>	.HOUSING..... ATTACHING PARTS	12	EA		1					*	198	1
			5306-527-5909	AN104145 <88044>	.BOLT,MACHINE.....	12	EA		18					*	198	2
P	D		5310-167-4433	2093D16 <66640>	.WASHER,CONVEX..... ---*---	12	EA		18					*	198	3
P	D		2810-217-3697	170949 <66640>	..SUPPORT,IMPELLER SHAFT..... ATTACHING PARTS	12	EA		1					*	198	4
P	D		2810-875-1463	56D71 <66640>	..SCREW,IMPELLER SHAFT..... BEARING ---*---	12	EA		8					*	198	5
P	D		5330-599-6373	2083D77 <66640>	..PACKING,PREFORMED.....	12	EA		1					*	198	6
P	D		2810-217-3710	2052D66 <66640>	..PLUG,HOLE CUP.....	12	EA		4					*	198	7
P	D		5340-597-8450	2019D116 <66640>	.RING,RETAINING.....	12	EA		4					*	198	8
P	D		5340-152-2667	2094D92 <66640>	..DISK,SOLID,PLAIN.....	12	EA		1					*	198	9
P	D		5340-290-0067	2094H92 <66640>	..DISK-0.002 IN.OVERSIZE.....	12	EA		AR					*	198	
P	F		5340-595-0636	5042H2 <66640>	..INSERT,SCREW THREAD.....	12	EA		AR	*	*	*		*	198	10
P	F		5340-595-0637	5042S2 <66640>	..INSERT,SCREW THREAD.....	12	EA		AR	*	*	*		*	198	
P	F		5340-386-4441	5042J2 <66640>	..INSERT,SCREW THREAD.....	12	EA		AR	*	*	*		*	198	
P	D		4730-203-0373	5042H3 <66640>	..ADAPTER BUSHING-..... 0.003 IN.OVERSIZE ON OD	12	EA		AR					*	198	11
P	D		2810-479-1105	5042S3 <66640>	..BUSHING-OPEN SCREW,0.007... IN.OVERSIZE ON OD	12	EA		AR					*	198	
P	D		2810-386-4442	5042J3 <66640>	..BUSHING,OIL SUMP TO..... SUPERCHARGER-0.012 IN. OVERSIZE ON OD	12	EA		AR					*	198	
P	D		5340-595-0639	5042H7 <66640>	..INSERT,SCREW THREAD.....	12	EA		AR					*	198	12
P	D		5340-334-0815	5042S7 <66640>	..INSERT,SCREW THREAD-0.007.. IN.OVERSIZE ON OD	12	EA		AR					*	198	
P	D		4730-595-0638	5042J7 <66640>	..ADAPTER BUSHING-0.012IN.... OVERSIZE ON OD	12	EA		AR					*	198	
P	D		2810-555-6670	147090 <66640>	..BUSHING,SLEEVE.....	12	EA		9					*	198	13
P	F		5307-149-4955	2031H20 <66640>	..STUD,PLAIN-0.003 IN..... OVERSIZE ON OD	12	EA		AR	*	*	*		*	198	14
P	F		5307-149-4953	2031S20 <66640>	..STUD,PLAIN-0.007 IN..... OVERSIZE ON OD	12	EA		AR	*	*	*		*	198	
P	F		5307-149-4954	2031J20 <66640>	..STUD,PLAIN-0.012 IN..... OVERSIZE ON OD	12	EA		AR	*	*	*		*	198	
P	D		5307-062-4384	2031H22 <66640>	..STUD,PLAIN-0.003 IN..... OVERSIZE ON OD	12	EA		AR					*	198	15
P	D		5307-149-5653	2031S22 <66640>	..STUD-0.007 IN.OVERSIZE ON.. OD	12	EA		AR					*	198	
P	D		5307-149-4951	2031J22 <66640>	..STUD,PLAIN-0.012 IN..... OVERSIZE ON OD	12	EA		AR					*	198	
P	F		5307-208-1158	396H1 <66640>	..STUD,STEPPED-0.003 IN..... OVERSIZE ON OD RPLS-- 5307-149-9601	12	EA		AR	*	*	*		*	198	16
P	F		5307-208-1400	396S1 <66640>	..STUD,STEPPED-0.006 IN..... OVERSIZE ON OD	12	EA		AR	*	*	*		*	198	
P	F		5307-611-3935	396K1 <66640>	..STUD,STEPPED-0.009 IN.....	12	EA		AR	*	*	2		*	198	

(1) SOURCE, MAINT AND REC CODE (a) SOURCE CODE	(b) MAINT LEVEL	(c) REC LEVEL CODE	(2) FEDERAL STOCK NUMBER	REFERENCE NUMBER	(3) DESCRIPTION	MODELS USABLE ON CH-34C	(4) UNIT OF ISSUE	(5) QTY INC IN UNIT PACK	(6) QTY INC IN UNIT	(7) 30-DAY DS/GS MAINT ALW (a) 1-20	(b) 21-50	(c) 51-100	(8) 1-YR ALW PER 100 EQUIP CNTGCY	(9) DEPOT MAINT ALW PER 100 EQUIP	(10) ILLUSTRATION (a) FIG NO	(b) ITEM NO
					CONTINUED										198	
					OVERSIZE ON OD											
P	F		5307-638-6990	396J1 <66640>	..STUD,STEPPED-0.012 IN.....	12	EA		AR	*	*	*		*	198	
					OVERSIZE ON OD											
P	F		5307-292-3012	2147H150 <66640>	..STUD,STEPPED-0.003 IN.....	12	EA		AR	*	*	*		*	198	17
					OVERSIZE ON OD											
P	F		5307-208-1406	2147S150 <66640>	..STUD,STEPPED-0.007 IN.....	12	EA		AR	*	*	*		*	198	
					OVERSIZE ON OD											
P	F		5307-292-3013	2147J150 <66640>	..STUD,STEPPED-0.012 IN.....	12	EA		AR	*	*	*		*	198	
					OVERSIZE ON OD											
P	D		2810-737-0932	148636N1 <66640>	.SHIM-0.010 IN.THK.....	12	EA		AR					*	198	
P	D		2810-737-0931	148636N2 <66640>	.SHIM-0.020 IN.THK.....	12	EA		AR					*	198	
P	D		5315-567-9111	138859 <66640>	.DOWEL,SUPERCHARGER.....	12	EA		2					*	198	18
			5330-242-6640	AN123864 <88044>	.PACKING,PREFORMED.....	12	EA		4					*	198	19
P	F		2810-512-9585	116774 <66640>	.PIPE,INTAKE-CYLINDERS NO....	12	EA		5	*	*	2		*	198	20
					1,2,3,8,& 9											
AF	F			430055 <66640>	.PIPE AND PLUG ASSEMBLY,.....	12	EA		1						198	
					INTAKE-CYLINDER NO.5											
AF	F			430056 <66640>	.PIPE AND PLUG ASSEMBLY,.....	12	EA		1						198	
					INTAKE-CYLINDER NO.6											
AF	F			430068 <66640>	.PIPE AND PLUG ASSEMBLY,.....	12	EA		1						198	
					INTAKE-CYLINDER NO.4											
AF	F			430069 <66640>	.PIPE AND PLUG ASSEMBLY,.....	12	EA		1						198	
					INTAKE-CYLINDER NO.7											
					ATTACHING PARTS											
P	F		5306-167-4086	AV45D1 <80254>	.BOLT,MACHINE.....	12	EA		26	*	*	*		*	198	21
			5306-206-0946	AN103015 <88044>	.BOLT,MACHINE-CYLINDER NO.3..	12	EA		1	*	*	*		*	198	22
			5310-167-0671	MS35338-102 <96906>	.WASHER,LOCK.....	12	EA		27	*	*	*		*	198	23
					---*---											
P	F		2810-626-2016	430043 <66640>	..PIPE ASSEMBLY,INTAKE-.....	12	EA		1	2	2	4		*	198	24
					CYLINDER NO.5											
P	F		2810-217-3730	430025 <66640>	..PIPE ASSEMBLY,INTAKE-.....	12	EA		1	*	2	2		*	198	
					CYLINDER NO.6											
P	F		2810-215-9694	430067 <66640>	..PIPE ASSEMBLY,INTAKE-.....	12	EA		1	*	*	2		*	198	
					CYLINDER NO.4											
P	F		2810-215-9693	430066 <66640>	..PIPE ASSEMBLY,INTAKE-.....	12	EA		1	*	2	2		*	198	
					CYLINDER NO.7											
P	F		4730-516-3004	118862 <66640>	...FLANGE,PIPE.....	12	EA		6	2	2	3		*	198	25
X1				136770 <66640>	...BOSS,INTAKE PIPE.....	12	EA		1						198	26
					THERMOCOUPLE											
P	O		2810-478-9956	163D86 <66640>	..FITTING,MALE AND FEMALE....	12	EA		1	*	*	*		*	198	27
			4730-288-8054	AN933B1 <88044>	..PLUG,PIPE.....	12	EA		1	REF	REF	REF		*	198	28
P	F		2810-290-8871	68561 <66640>	.GASKET.....	12	EA		9	5	14	27		*	198	29
P	F		2810-141-3580	138075 <66640>	.PACKING,PREFORMED RPLS--...	12	EA		9	2	3	6		*	198	30
					2810-479-1353											
P	F		5340-326-6712	68336 <66640>	.RING,EXTERNALLY THREADED....	12	EA		9	*	*	*		*	198	31
P	F		2810-478-9436	127988 <66640>	.RING,INTAKE PIPE PACKING....	12	EA		9	2	2	5		*	198	32
P	F		5330-599-7018	68335 <66640>	.WASHER,NONMETALLIC.....	12	EA		9	3	7	14		*	198	33
AF	F			430051 <66640>	.FLANGE ASSEMBLY-CYLINDER....	12	EA		1						198	
					NO.1											
					ATTACHING PARTS											
			5306-282-2310	AN103912 <88044>	.BOLT,MACHINE.....	12	EA		4	*	*	*		*	198	34

(1) SOURCE, MAINT AND REC CODE (a) SOURCE CODE	(b) MAINT LEVEL	(c) REC CODE	(2) FEDERAL STOCK NUMBER	REFERENCE NUMBER		(3) DESCRIPTION	MODELS USABLE ON CH-34C	(4) UNIT OF ISSUE	(5) QTY INC IN UNIT PACK	(6) QTY INC IN UNIT	(7) 30-DAY DS GS MAINT ALW (a) 1-20	(b) 21-50	(c) 51-100	(8) 1-YR ALWPER 100 EQUIP CNTGCY	(9) DEPOT MAINT ALWPER 100 EQUIP	(10) ILLUSTRATION (a) FIG NO	(b) ITEM NO
			5310-194-0636	MS9320-11	<96906>	.WASHER,FLAT.....	12	EA		4	*	*	*		*	198	35
						---*---											
P	O		2810-217-3674	138942	<66640>	..CONNECTOR,ROCKER BOX..... SCAVENGE TUBE	12	EA		3	*	*	REF		*	198	36
P	F		2810-217-3700	171709	<66640>	..FLANGE,ROCKER BOX OIL DRAIN	12	EA		1	*	*	*		*	198	37
P	F		2810-641-7151	171731	<66640>	..GASKET.....	12	EA		1	2	4	8		*	198	38
						IMPELLER AND IMPELLER SHAFT.. SEE FIG.183A FOR NHA	12			1						199	
P	D		5310-638-6589	113148	<66640>	NUT,PLAIN ROUND.....	12	EA		1					*	199	1
P	D		5310-168-5118	2067D21	<66640>	WASHER,KEY.....	12	EA		1					*	199	2
P	D		2810-306-5899	29250	<66640>	CARRIER,SEAL RING.....	12	EA		1					*	199	3
P	D		2810-213-1772	139539	<66640>	RING,IMPELLER.....	12	EA		4					*	199	4
P	D		2810-303-6049	139539Y1	<66640>	SEAL RING,METAL-0.010 IN..... OVERSIZE ON W	12	EA		AR					*	199	
P	D		2810-303-6083	139539Y2	<66640>	SEAL RING,METAL-0.010 IN..... OVERSIZE ON W	12	EA		AR					*	199	
P	D		2810-303-6057	139539Y10	<66640>	SEAL RING,METAL-0.005 IN..... OVERSIZE ON OD	12	EA		AR					*	199	
P	D		2810-303-6061	139539Y11	<66640>	SEAL RING,METAL-0.005 IN..... OVERSIZE ON OD & 0.005 IN. OVERSIZE ON W	12	EA		AR					*	199	
P	D		2810-303-6080	139539Y12	<66640>	SEAL RING,METAL-0.005 IN..... OVERSIZE ON OD & 0.010 IN. OVERSIZE ON W	12	EA		AR					*	199	
P	D		2810-303-6087	139539Y20	<66640>	SEAL RING,METAL,0.010 IN..... OVERSIZE ON OD	12	EA		AR					*	199	
P	D		2810-303-6091	139539Y21	<66640>	SEAL RING,METAL-0.010 IN..... OVERSIZE ON OD & 0.005 IN. OVERSIZE ON W	12	EA		AR					*	199	
P	D		2810-303-6097	139539Y22	<66640>	SEAL RING,METAL-0.010 IN..... OVERSIZE ON OD & 0.010 IN. OVERSIZE ON W	12	EA		AR					*	199	
P	D		2810-794-5935	432810	<66640>	IMPELLER MACHINE.....	12	EA		1					*	199	5
P	D		2810-794-5936	148028	<66640>	.INDUCER,SUPERCHARGER..... IMPELLER	12	EA		1					*	199	6
			5315-241-2921	AN122693	<88044>	.PIN,STRAIGHT,HEADLESS.....	12	EA		2					*	199	7
P	D		5315-148-8950	13H35	<66640>	.PIN,STRAIGHT,HEADLESS..... 0.002 IN.OVERSIZE ON OD	12	EA		AR					*	199	
P	D		5315-148-0795	13S35	<66640>	.PIN,STRAIGHT,HEADLESS..... 0.010 IN.OVERSIZE ON OD	12	EA		AR					*	199	
P	D		5315-282-6867	13J35	<66640>	.PIN,STRAIGHT,HEADLESS..... 0.015 IN.OVERSIZE ON OD	12	EA		AR					*	199	
X1				148027	<66640>	.IMPELLER,SUPERCHARGER.....	12	EA		1						199	
P	D		2810-445-3497	148363	<66640>	SPACER-IMPELLER.....	12	EA		2					*	199	8
P	D		2810-217-3675	138985	<66640>	SLEEVE,IMPELLER SHAFT.....	12	EA		1					*	199	9
P	D		2810-213-1772	139539	<66640>	RING,IMPELLER.....	12	EA		4					*	199	10

(1) SOURCE, MAINT AND REC CODE (a) SOURCE CODE	(b) MAINT LEVEL	(c) REC CODE	(2) FEDERAL STOCK NUMBER	REFERENCE NUMBER	(3) DESCRIPTION	MODELS USABLE ON CH-34C	(4) UNIT OF ISSUE	(5) QTY INC IN UNIT PACK	(6) QTY INC IN UNIT	(7) 30-DAY DS/GS MAINT ALW (a) 1-20	(b) 21-50	(c) 51-100	(8) 1-YR ALW PER 100 EQUIP CNTGCY	(9) DEPOT MAINT ALW PER 100 EQUIP	(10) ILLUSTRATION (a) FIG NO	(b) ITEM NO
P	D		2810-303-6049	139539Y1 <66640>	SEAL RING,METAL-0.005 IN..... OVERSIZE ON W	12	EA		AR					*	199	
P	D		2810-303-6083	139539Y2 <66640>	SEAL RING,METAL-0.010 IN..... OVERSIZE ON W	12	EA		AR					*	199	
P	D		2810-303-6057	139539Y10 <66640>	SEAL RING,METAL-0.005 IN..... OVERSIZE ON OD	12	EA		AR					*	199	
P	D		2810-303-6061	139539Y11 <66640>	SEAL RING,METAL-0.005 IN..... OVERSIZE ON OD & 0.005 IN. OVERSIZE ON W	12	EA		AR					*	199	
P	D		2810-303-6080	139539Y12 <66640>	SEAL RING,METAL-0.005 IN..... OVERSIZE ON OD & 0.010 IN. OVERSIZE ON W	12	EA		AR					*	199	
P	D		2810-303-6087	139539Y20 <66640>	SEAL RING,METAL-0.010 IN..... OVERSIZE ON OD	12	EA		AR					*	199	
P	D		2810-303-6091	139539Y21 <66640>	SEAL RING,METAL-0.010 IN..... OVERSIZE ON OD & 0.005 IN. OVERSIZE ON W	12	EA		AR					*	199	
P	D		2810-303-6097	139539Y22 <66640>	SEAL RING,METAL-0.010 IN..... OVERSIZE ON OD & 0.010 IN. OVERSIZE ON W	12	EA		AR					*	199	
			2810-863-1163	145206Y3 <66640>	WASHER,IMPELLER..... RPL-BY 5310-334-9617	12									199	
P	D		5310-334-9617	145206 <66640>	WASHER,IMPELLER DRIVE SHAFT.. RPLS-- 2810-863-1163, 2810-863-1156,2810-863-1164	12	EA		1					*	199	11
			2810-303-9403	145206Y14 <66640>	WASHER,THRUST RPL-BY..... 2810-303-9399	12									199	
P	D		2810-303-9399	145206Y10 <66640>	WASHER,THRUST..... RPLS-- 2810-303-9403	12	EA		AR					*	199	
P	D		2810-863-1152	145206Y16 <66640>	WASHER-0.171 IN.TO 0.172..... IN.THK	12	EA		AR					*	199	
P	D		5310-334-9618	145206Y26 <66640>	WASHER,IMPELLER DRIVE SHAFT..	12	EA		AR					*	199	
P	D		2810-863-1153	145206Y17 <66640>	WASHER-0.173 IN.TO 0.174..... IN.THK	12	EA		AR					*	199	
P	D		2810-863-1154	145206Y18 <66640>	WASHER,IMPELLER SHAFT.....	12	EA		AR					*	199	
P	D		2810-863-1155	145206Y19 <66640>	WASHER,IMPELLER SHAFT.....	12	EA		AR					*	199	
P	D		2810-863-1157	145206Y20 <66640>	WASHER,IMPELLER SHAFT.....	12	EA		AR					*	199	
P	D		2810-863-1158	145206Y21 <66640>	WASHER,IMPELLER SHAFT.....	12	EA		AR					*	199	
P	D		2810-863-1159	145206Y22 <66640>	WASHER,IMPELLER SHAFT.....	12	EA		AR					*	199	
P	D		2810-863-1160	145206Y23 <66640>	WASHER,IMPELLER SHAFT.....	12	EA		AR					*	199	
P	D		2810-863-1161	145206Y24 <66640>	WASHER,IMPELLER SHAFT.....	12	EA		AR					*	199	
P	D		2810-863-1162	145206Y25 <66640>	WASHER,IMPELLER SHAFT..... RPLS-- 5310-334-9619	12	EA		AR					*	199	
			5310-334-9619	145206Y28 <66640>	WASHER,IMPELLER SHAFT..... RPL-BY 2810-863-1162	12									199	
P	D		2810-925-9881	145206Y32 <66640>	WASHER,THRUST.....	12	EA		AR					*	199	
			2810-863-1166	145206Y6 <66640>	WASHER,IMPELLER SHAFT..... RPL-BY 2810-863-1165	12									199	
			2810-863-1167	145206Y7 <66640>	WASHER,IMPELLER SHAFT..... RPL-BY 2810-863-1165	12									199	
			2810-863-1168	145206Y8 <66640>	WASHER,IMPELLER RPL-BY..... 2810-863-1165	12									199	

(1) SOURCE, MAINT AND REC CODE (a) SOURCE CODE	(b) MAINT LEVEL	(c) REC CODE	(2) FEDERAL STOCK NUMBER	REFERENCE NUMBER		(3) DESCRIPTION	MODELS USABLE ON CH-34C	(4) UNIT OF ISSUE	(5) QTY INC IN UNIT PACK	(6) QTY INC IN UNIT	(7) 30-DAY DS GS MAINT ALW (a) 1-20	(b) 21-50	(c) 51-100	(8) 1-YR ALW PER 100 EQUIP CNTGCY	(9) DEPOT MAINT ALW PER 100 EQUIP	(10) ILLUSTRATION (a) FIG NO	(b) ITEM NO
			2810-863-1169	145206Y9	<66640>	WASHER,IMPELLER SHAFT..... RPL-BY 2810-863-1165	12									199	
P	D		2810-863-1165	145206Y5	<66640>	WASHER,IMPELLER SHAFT..... RPLS-- 2810-863-1168, 2810-863-1166,2810-863-1167 & 2810-863-1169	12	EA		AR					*	199	
			2810-783-1513	432818	<66640>	SHAFT ASSEMBLY..... OBS-BY 2810-075-8296	12									199	
P	D		2810-075-8296	431349	<66640>	SHAFT AND BUSHING ASSEMBLY... RPLS-- 2810-783-1513 U/O ENGINE WITH FLUID COUPLING	12	EA		1					*	199	12
P	D		2810-479-1158	61235	<66640>	.BEARING,SLEEVE.....	12	EA		1					*	199	13
			2810-320-2088	134955	<66640>	.BEARING,SLEEVE..... RPL-BY 2810-076-9369	12									199	
P	D		2810-076-9369	146573	<66640>	.BUSHING,IMPELLER..... RPLS-- 2810-320-2088	12	EA		1					*	199	14
P	D		2810-478-9787	134956N1	<66640>	RING,IMPELLER SHAFT-THRUST...	12	EA		1					*	199	15
P	D		2810-076-0592	146568	<66640>	RETAINER,IMPELLER SHAFT..... ATTACHING PARTS	12	EA		1					*	199	16
			5305-584-6751	AN115862	<88044>	SCREW,MACHINE..... ---*---	12	EA		5					*	199	17
P	D		2810-479-1280	66374	<66640>	SEAL RING,METAL.....	12	EA		1					*	199	18
P	D		2810-479-1281	66374Y10	<66640>	SEAL RING,METAL-0.005 IN..... OVERSIZE ON OD	12	EA		AR					*	199	
P	D		5340-200-7768	66374Y20	<66640>	RING,RETAINING-0.010 IN..... OVERSIZE ON OD	12	EA		AR					*	199	
P	D		2810-600-3418	66374Y30	<66640>	SEAL RING,METAL-0.015 IN..... OVERSIZE ON OD	12	EA		AR					*	199	
P	D		2810-306-5894	25888	<66640>	SHIM,IMPELLER SHAFT.....	12	EA		1					*	199	19
						HOUSING AND STUDDING..... ASSEMBLY-SUPERCHARGER,REAR	12									200	
P	D		2810-997-4732	433921	<66640>	HOUSING,MACHINING..... SEE FIG.183A FOR NHA ATTACHING PARTS	12	EA							*	200	1
			5310-857-4959	MS21044C6	<96906>	NUT,SELF-LOCKING,HEXAGON.....	12	EA		21					*	200	2
			5310-184-8974	MS9320-12	<96906>	WASHER,FLAT..... ---*---	12	EA		21					*	200	3
P	D		2810-217-3676	139079	<66640>	.SLEEVE,SUPERCHARGER HOUSING.	12	EA		1					*	200	4
P	D		2810-614-8713	139079Y1	<66640>	.SLEEVE-0.005 IN.OVERSIZE.... ON OD	12	EA		AR					*	200	
			5305-282-5511	AN115808	<88044>	.SCREW,MACHINE.....	12	HD		4					*	200	5
			5310-188-3744	MS9320-09	<96906>	.WASHER,FLAT.....	12	EA		4					*	200	6
P	D		2810-217-3706	171774	<66640>	.CAP,BEARING.....	12	EA		1					*	200	7
P	D		2810-092-1750	171774Y2	<66640>	.CAP,BEARING-0.010 IN..... OVERSIZE ON OD	12	EA		AR					*	200	

(1) SOURCE, MAINT AND REC CODE (a) SOURCE CODE	(b) MAINT LEVEL	(c) REC CODE	(2) FEDERAL STOCK NUMBER	REFERENCE NUMBER	(3) DESCRIPTION	MODELS USABLE ON CH-34C	(4) UNIT OF ISSUE	(5) QTY INC IN UNIT PACK	(6) QTY INC IN UNIT	(7) 30-DAY DS/GS MAINT ALW (a) 1-20	(b) 21-50	(c) 51-100	(8) 1-YR ALW PER 100 EQUIP CNTGCY	(9) DEPOT MAINT ALW PER 100 EQUIP	(10) ILLUSTRATION (a) FIG NO	(b) ITEM NO
P	D		2810-343-9298	430481 <66640>	.TUBE AND CLIP ASSEMBLY..... ATTACHING PARTS	12	EA		1					*	200	
			5305-637-8020	528D3 <66640>	.SCREW,MACHINE..... RPL-BY 5305-282-9145	12	EA								200	
			5305-282-9145	AN115860 <88044>	.SCREW,MACHINE.....	12	EA		1					*	200	8
P	D		5310-209-4115	2067D536 <66640>	.WASHER,KEY..... ---*---	12	EA		1					*	200	9
X1				145224 <66640>	..TUBE,SUPERCHARGER DRAIN.... VALVE	12	EA		1						200	10
X1				145225 <66640>	..CLAMP,LOOP.....	12	EA		1						200	11
P	D		2810-314-8167	68586 <66640>	.TUBE,SUPERCHARGER,OIL SEAL.. VENT	12	EA		1					*	200	12
P	D		2810-314-4607	120350 <66640>	.TUBE-SUPERCHARGER REGULATOR.	12	EA		1					*	200	13
			2810-314-4607	1511 <09292>	ADDED PART NO.FOR ABOVE ITEM.	12									200	13
P	D		4730-479-0477	36D2 <66640>	.PLUG,PIPE.....	12	EA		1					*	200	14
			4730-535-6749	AN933B3 <88044>	.PLUG,PIPE.....	12	EA		2	*	*	*		*	200	15
			4730-289-3072	MS9015-06 <96906>	.PLUG,MACHINE THREAD.....	12	EA		1	*	*	*		*	200	16
			5330-290-9402	AN123026 <88044>	.GASKET-OIL PASSAGE PLUG.....	12	LL		1	*	*	*		*	200	17
			4730-222-9637	MS20913-6D <96906>	.PLUG,PIPE.....	12	EA		1	*	*	*		*	200	18
			5330-663-5970	4036D4 <66640>	.PACKING,PREFORMED..... RPL-BY 5330-576-4082	12									200	
P	F		5330-576-4082	2083D233 <66640>	.PACKING,PREFORMED..... RPLS-- 5330-663-5970	12	EA		1	2	6	12		*	200	19
			5315-241-2929	AN122744 <88044>	.PIN,STRAIGHT,HEADLESS-REAR.. HOUSING DOWEL	12	EA		2					*	200	20
P	F		5340-479-1104	5042H4 <66640>	.INSERT,SCREW THREAD-0.003... IN.OVERSIZE ON OD	12	EA		AR	*	*	*		*	200	21
P	F		5340-479-1106	5042S4 <66640>	.INSERT,SCREW THREAD-0.007... IN.OVERSIZE ON OD	12	EA		AR	*	*	*		*	200	
P	F		5340-506-0623	5042J4 <66640>	.INSERT,SCREW THREAD-0.012... IN.OVERSIZE ON OD	12	EA		AR	*	*	*		*	200	
P	F		2610-049-0160	5042K4 <66640>	.BUSHING-0.005 IN.OVERSIZE... ON OD	12	EA		AR	*	*	*		*	200	
P	F		2810-479-1108	5043H3 <66640>	.BUSHING,BLIND SCREW-0.003... IN.OVERSIZE ON OD	12	EA		AR	*	*	*		*	200	22
P	F		2810-479-1109	5043S3 <66640>	.BUSHING,BLIND SCREW-0.007... IN.OVERSIZE ON OD	12	EA		AR	*	*	*		*	200	
P	F		5340-200-4687	5043J3 <66640>	.INSERT,SCREW THREAD-0.012... IN.OVERSIZE ON OD	12	EA		AR	*	*	*		*	200	
P	F		5307-637-9983	118421 <66640>	.STUD,PLAIN..... 0.003 IN.OVERSIZE ON OD	12	EA		AR	*	*	*		*	200	
			5307-945-8069	634D2 <66640>	.STUD,STEPPED..... RPL-BY 5307-945-4769	12									200	
P	F		5307-945-4769	634H2 <66640>	.STUD,RECESSED AND STEPPED-.. 0.003 IN.OVERSIZE ON OD RPLS-- 5307-945-8069	2	EA		AR	2	6	11		*	200	23
P	F		5307-945-4770	634S2 <66640>	.STUD,RECESSED AND STEPPED... 0.006 IN.OVERSIZE ON OD	2	EA		AR	*	*	*		*	200	
P	F		5307-637-9981	118S21 <66640>	.STUD,PLAIN-0.007 IN..... OVERSIZE ON OD	12	EA		AR	*	*	*		*	200	
			5307-207-7566	118J21 <66640>	.STUD,PLAIN-0.012 IN..... OVERSIZE ON OD	12									200	

(1) SOURCE, MAINT AND REC CODE (a) SOURCE CODE	(b) MAINT LEVEL	(c) REC CODE	(2) FEDERAL STOCK NUMBER	REFERENCE NUMBER	(3) DESCRIPTION	MODELS USABLE ON CH-34C	(4) UNIT OF ISSUE	(5) QTY INC IN UNIT PACK	(6) QTY INC IN UNIT	(7) 30-DAY DS GS MAINT ALW (a) 1-20	(b) 21-50	(c) 51-100	(8) 1-YR ALW PER 100 EQUIP CNTGCY	(9) DEPOT MAINT ALW PER 100 EQUIP	(10) ILLUSTRATION (a) FIG NO	(b) ITEM NO
					CONTINUED USE UNTIL EXHAUSTED,NO REPLACEMENT										200	
P	F		5307-149-5494	2134H100 <66640>	.STUD,STEPPED-0.003 IN..... OVERSIZE ON OD	12	EA		AR	*	*	*		*	200	24
P	F		5307-149-5496	2134J100 <66640>	.STUD,STEPPED-0.012 IN..... OVERSIZE ON OD	12	EA		AR	*	*	*		*	200	
P	F		5307-149-5495	2134S100 <66640>	.STUD,STEPPED-0.007 IN..... OVERSIZE ON OD	12	EA		AR	*	*	*		*	200	
			5307-632-9239	2145D100 <66640>	.STUD,STEPPED..... RPL-BY 5307-479-0336	12									200	
P	F		5307-479-0336	2145H100 <66640>	.STUD,STEPPED-0.003 IN..... OVERSIZE ON OD RPLS-- 5307-632-9239	12	EA		AR	*	*	*		*	200	25
P	F		5307-216-3045	2145S100 <66640>	.STUD,STEPPED-0.007 IN..... OVERSIZE ON OD	12	EA		AR	*	*	*		*	200	
P	F		5307-169-3451	2145J100 <66640>	.STUD,STEPPED-0.012 IN..... OVERSIZE ON OD	12	EA		AR	*	*	*		*	200	
P	D		5307-169-3460	2134H250 <66640>	.STUD-0.003 IN.OVERSIZE ON OD	12	EA		AR					*	200	26
P	D		5307-169-3461	2134S250 <66640>	.STUD,RECESSED-0.007 IN..... OVERSIZE ON OD	12	EA		AR					*	200	
P	D		5307-207-6236	2134J250 <66640>	.STUD-0.012 IN.OVERSIZE ON OD	12	EA		AR					*	200	
			5307-208-1159	2137D80 <66640>	.STUD,STEPPED..... RPL-BY 5307-062-4370	12									200	
P	D		5307-062-4370	2137H80 <66640>	.STUD,STEPPED-0.003 IN..... OVERSIZE ON OD	12	EA		AR					*	200	27
P	D		5307-062-4371	2137S80 <66640>	.STUD-0.007 IN.OVERSIZE ON OD	12	EA		AR					*	200	
P	D		5307-149-4341	2137J80 <66640>	.STUD,STEPPED-0.012 IN..... OVERSIZE ON OD	12	EA		AR					*	200	
			5307-149-9598	2138H145 <66640>	.STUD,STEPPED..... RPL-BY 5307-208-1158	1									200	
P	F		5307-208-1158	396H1 <66640>	.STUD,STEPPED-0.003 IN..... OVERSIZE ON OD RPS-- 5307-149-9598	12	EA		AR	*	*	*		*	200	28
			5307-149-9599	2138S145 <66640>	.STUD,STEPPED..... RPL-BY 5307-208-1400	12									200	
P	F		5307-208-1400	396S1 <66640>	.STUD,STEPPED-0.007 IN..... OVERSIZE ON OD RPLS-- 5307-149-9599	12	EA		AR	*	*	*		*	200	
P	F		5307-208-0631	2145H125 <66640>	.STUD,STEPPED-0.003 IN..... OVERSIZE ON OD	12	EA		AR	*	*	*		*	200	29
P	F		5307-533-5021	2145S125 <66640>	.STUD,STEPPED-0.007 IN..... OVERSIZE ON OD	12	EA		AR	*	*	*		*	200	
P	F		5307-515-7290	2145J125 <66640>	.STUD,STEPPED-0.012 IN..... OVERSIZE ON OD	12	EA		AR	*	*	*		*	200	
P	D		5315-947-3248	2094D338 <66640>	.PIN,STRAIGHT,HEADLESS..... V/O 2810-793-2846	12	EA		3					*	200	
P	D		2810-765-9629	139199 <66640>	GASKET.....	12	EA		1					*	200	30
P	O		2810-306-5904	411716 <66640>	BREATHER ASSEMBLY,ENGINE.....	12	EA		1	*	*	*		*	200	31
P	O		4730-768-4703	CD48A <36540>	DETECTOR,MAGNETIC CHIP.....	12	EA		1	*	*	*	2	*	200	32
P	O		2810-579-7841	23D55 <66640>	GASKET.....	12	EA		1	3	9	17		*	200	33
P	O		2810-569-2857	429287 <66640>	STRAINER ASSEMBLY,.....	12	EA		1	*	*	*		*	200	34

(1) SOURCE, MAINT AND REC CODE (a) SOURCE CODE	(b) MAINT LEVEL	(c) REC CODE	(2) FEDERAL STOCK NUMBER	REFERENCE NUMBER	(3) DESCRIPTION	MODELS USABLE ON CH-34C	(4) UNIT OF ISSUE	(5) QTY INC IN UNIT PACK	(6) QTY INC IN UNIT	(7) 30-DAY DS GS MAINT ALW (a) 1-20	(b) 21-50	(c) 51-100	(8) 1-YR ALW PER 100 EQUIP CNTGCY	(9) DEPOT MAINT ALW PER 100 EQUIP	(10) ILLUSTRATION (a) FIG NO	(b) ITEM NO
					CONTINUED										200	34
					SUPERCHARGER											
X1				139869 <66640>	.NUT-OIL SUMP STRAINER.....	12	EA		1						200	
X1				116798 <66640>	.SLEEVE-REAR HOUSING OIL.....	12	EA		1						200	
X1				137793 <66640>	.STRAINER-REAR HOUSING OIL...	12	EA		1						200	
P	O		2810-579-7839	23D51 <66640>	GASKET.....	12	EA		1	3	8	16		*	200	35
			2810-322-4251	430929 <66640>	VALVE ASSEMBLY RPL-BY.....	12									200	
					2810-670-9710											
AF	O			432152 <66640>	VALVE ASSEMBLY.....	12	EA		1						200	
					RPLS--2810-322-4251											
P	F		2810-306-5901	410725 <66640>	.POPPET VALVE ASSEMBLY.....	12	EA		1	*	*	*		*	200	36
X1				145185 <66640>	..DISK-SUPERCHARGER DRAIN....	12	EA		1						200	
					VALVE											
X1				67173 <66640>	..PISTON-SUPERCHARGER DRAIN..	12	EA		1						200	
					VALVE											
P	F		2810-770-4694	425888 <66640>	.TUBE ASSEMBLY,OIL SUMP.....	12	EA		1	*	*	*		*	200	37
					EXTERNAL OIL											
X1				120930 <66640>	..FITTING-VALVE RETURN TUBE..	12	EA		1						200	
X1				134559 <66640>	..NIPPLE-VALVE RETURN TUBE...	12	EA		1						200	
X1				134556 <66640>	..TUBE-DRAIN VALVE RETURN....	12	EA		1						200	
P	F		2810-217-3689	139844 <66640>	.HOUSING,DRAIN VALVE.....	12	EA		1	*	*	*		*	200	38
					SUPERCHARGER											
P	F		2810-515-2804	145581 <66640>	.SPRING,HELICAL,COMPRESSION..	12	EA		1	*	*	*		*	200	39
P	F		2810-479-1302	67169 <66640>	.STOP AND SPRING RETAINER....	12	EA		1	*	*	*		*	200	40
P	F		5340-090-7917	2019D8 <66640>	.RING,RETAINING.....	12	EA		1	*	*	*		*	200	41
P	F		2810-251-9354	63669 <66640>	.PACKING,PREFORMED.....	12	EA		3	2	3	5		*	200	42
P	F		2810-306-6145	67171 <66640>	.RETAINER,VALVE BALL DRAIN...	12	EA		1	*	*	*		*	200	43
			3110-183-9175	MS134352 <96906>	.BALL,BEARING.....	12	EA		2	*	*	*		*	200	44
			2810-306-6144	67167 <66640>	.BODY-SUPERCHARGER DRUM.....	12									200	
					VALVE RPL-BY 2810-670-7180											
P	F		2810-670-7180	147583 <66640>	.BODY-SUPERCHARGER DRUM.....	12	EA		1	*	*	*		*	200	45
					VALVE RPLS--											
					2810-306-6144											
			5330-559-8674	2083D198 <66640>	.PACKING,PREFORMED.....	12									200	
					RPL-BY 5330-242-6628											
			5330-242-6628	AN123962 <88044>	.PACKING,PREFORMED-DRAIN.....	12	EA		2	*	*	*		*	200	46
					VALVE BODY RPLS--											
					5330-559-8674											
P	O		5330-148-4690	37D26 <66640>	WASHER,NONMETALLIC.....	12	EA		1	4	11	22		*	200	47
			5330-148-4690	501D7601-030 <12955>	ADDED PART NO.FOR ABOVE ITEM.	12				REF	REF	REF			200	47
			2810-342-1177	429197 <66640>	PLATE AND PIN ASSEMBLY.....	12									200	
					RPL-BY 2810-331-6446											
P	D		2810-331-6446	429654 <66640>	PLATE AND PIN ASSEMBLY.....	12	EA		1					*	200	48
					RPLS-- 2810-342-1177											
					ATTACHING PARTS											
			5315-234-1856	MS24665-155 <96906>	PIN,COTTER-HOUSING STUD.....	12	HD		5					*	200	
			5310-268-6049	AN121552 <88044>	NUT,CASTELLATED,HEXAGON.....	12	EA		5					*	200	49
			5310-194-0637	MS9320-10 <96906>	WASHER,FLAT.....	12	EA		5					*	200	50
					---*---											
			5315-663-2598	AN150232 <88044>	.PIN,STRAIGHT,HEADLESS.....	12	EA		1					*	200	51
X1				171093 <66640>	.PLATE-DIFFUSER.....	12	EA		1						200	
P	D		2810-118-6358	112403 <66640>	SHIM-DIFFUSER PLATE.....	12	EA		AR					*	200	52

(1) SOURCE, MAINT AND REC CODE (a) SOURCE CODE	(b) MAINT LEVEL	(c) REC CODE	(2) FEDERAL STOCK NUMBER	REFERENCE NUMBER		(3) DESCRIPTION	MODELS USABLE ON CH-34C	(4) UNIT OF ISSUE	(5) QTY INC IN UNIT PACK	(6) QTY INC IN UNIT	(7) 30 DAY DS GS MAINT ALW (a) 1-20	(b) 21-50	(c) 51-100	(8) 1-YR ALW PER 100 EQUIP CNTGCY	(9) DEPOT MAINT ALW PER 100 EQUIP	(10) ILLUSTRATION (a) FIG NO	(b) ITEM NO
						SHAFT,ACCESSORY DRIVE AND.... STARTER SEE FIG.183A FOR NHA	12			1						201	
P	D		2810-217-3668	138732N2	<66640>	SHAFT,ACCESSORY.....	12	EA		1					*	201	1
P	D		2810-479-1308	67369	<66640>	SEAL RING,METAL.....	12	EA		1					*	201	2
P	D		2810-314-8130	120368	<66640>	GEAR,ACCESSORY DRIVE.....	12	EA		1					*	201	3
P	D		2810-478-8860	112043	<66640>	SPRING,HELICAL,COMPRESSION...	12	EA		5					*	201	4
P	D		2810-479-1162	62338	<66640>	PIN,ACCESSORY DRIVE..... GEAR SPRING	12	EA		10					*	201	5
P	D		2810-118-7605	29539	<66640>	PLATE,RETAINER..... ATTACHING PARTS	12	EA		1					*	201	6
			5305-282-5509	AN115805	<88044>	SCREW,MACHINE.....	12	HD		5					*	201	7
						---*---											
P	D		2810-306-5768	115458	<66640>	SPACER,SLEEVE.....	12	EA		1					*	201	8
MD	D			115458Y1	<66640>	SPACER,SLEEVE.....NOTE 1	12	EA		AR						201	
MD	D			115458Y2	<66640>	SPACER,SLEEVE.....NOTE 1	12	EA		AR						201	
MD	D			115458Y3	<66640>	SPACER,SLEEVE.....NOTE 1	12	EA		AR						201	
MD	D			115458Y4	<66640>	SPACER,SLEEVE.....NOTE 1	12	EA		AR						201	
MD	D			115458Y5	<66640>	SPACER,SLEEVE.....NOTE 1	12	EA		AR						201	
MD	D			115458Y6	<66640>	SPACER,SLEEVE.....NOTE 1	12	EA		AR						201	
MD	D			115458Y7	<66640>	SPACER,SLEEVE.....NOTE 1	12	EA		AR						201	
MD	D			115458Y8	<66640>	SPACER,SLEEVE-0.844 IN.TO.... 0.848 IN.THK NOTE 1	12	EA		AR						201	
MD	D			115458Y9	<66640>	SPACER,SLEEVE.....NOTE 1	12	EA		AR						201	
MD	D			115458Y10	<66640>	SPACER,SLEEVE-0.836 IN.TO.... 0.840 IN.THK NOTE 1	12	EA		AR						201	
MD	D			115458Y11	<66640>	SPACER,SLEEVE-0.832 IN.TO.... 0.836 IN.THK NOTE 1	12	EA		AR						201	
MD	D			115458Y12	<66640>	SPACER,SLEEVE-0.828 IN.TO.... 0.832 IN.THK NOTE 1	12	EA		AR						201	
MD	D			115458Y13	<66640>	SPACER,SLEEVE-0.824 IN.TO.... 0.828 IN.THK NOTE 1	12	EA		AR						201	
MD	D			115458Y14	<66640>	SPACER,SLEEVE-0.820 IN.TO.... 0.824 IN.THK NOTE 1	12	EA		AR						201	
MD	D			115458Y15	<66640>	SPACER,SLEEVE-0.816 IN.TO.... 0.820 IN.THK NOTE 1	12	EA		AR						201	
MD	D			115458Y16	<66640>	SPACER-0.876 IN.TO 0.880..... IN.THK NOTE 1	12	EA		AR						201	
MD	D			115458Y17	<66640>	SPACER-0.880 IN.TO 0.884..... IN.THK NOTE 1	12	EA		AR						201	
MD	D			115458Y18	<66640>	SPACER-0.884 IN.TO 0.888..... IN.THK NOTE 1	12	EA		AR						201	
MD	D			115458Y19	<66640>	SPACER-0.888 IN.TO 0.892..... IN.THK NOTE 1	12	EA		AR						201	
MD	D			115458Y20	<66640>	SPACER-0.892 IN.TO 0.896..... IN.THK NOTE 1	12	EA		AR						201	

(1) SOURCE, MAINT AND REC CODE (a) SOURCE CODE	(b) MAINT LEVEL	(c) REC CODE	(2) FEDERAL STOCK NUMBER	REFERENCE NUMBER		(3) DESCRIPTION	MODELS USABLE ON CH-34C	(4) UNIT OF ISSUE	(5) QTY INC IN UNIT PACK	(6) QTY INC IN UNIT	(7) 30-DAY DS GS MAINT ALW (a) 1-20	(b) 21-50	(c) 51-100	(8) 1-YR ALW PER 100 EQUIP CNTGCY	(9) DEPOT MAINT ALW PER 100 EQUIP	(10) ILLUSTRATION (a) FIG NO	(b) ITEM NO
MD	D			115458Y21	<66640>	SPACER-0.896 IN.TO 0.900..... IN.THK NOTE 1	12	EA		AR						201	
MD	D			115458Y22	<66640>	SPACER-0.900 IN.TO 0.904..... IN.THK NOTE 1	12	EA		AR						201	
MD	D			115458Y23	<66640>	SPACER-0.904 IN.TO 0.908..... IN.THK NOTE 1	12	EA		AR						201	
MD	D			115458Y24	<66640>	SPACER-0.908 IN.TO 0.912..... IN.THK NOTE 1	12	EA		AR						201	
MD	D			115458Y25	<66640>	SPACER-0.912 IN.TO 0.916..... IN.THK NOTE 1	12	EA		AR						201	
MD	D			115458Y26	<66640>	SPACER-0.916 IN.TO 0.920..... IN.THK NOTE 1	12	EA		AR						201	
P	F		2810-213-1785	170048	<66640>	COUPLING-STARTER,THREE JAW...	12	EA		1	*	*	*		*	201	9
P	D		2810-346-4362	115459	<66640>	SPRING,HELICAL,COMPRESSION...	12	EA		1					*	201	10
P	D		2810-478-9440	128061	<66640>	PLUG,ACCESSORY DRIVE AND..... STARTER	12	EA		1					*	201	11
P	D		5340-478-9989	2017D10	<66640>	RING,RETAINING.....	12	EA		1					*	201	12
P	D		2810-118-8718	66376	<66640>	RING-ACCESSORY DRIVE.....	12	EA		1					*	201	13
MD	D			66376Y1	<66640>	RING,ACCESSORY DRIVE...NOTE 2	12	EA		AR						201	
MD	D			66376Y2	<66640>	RING,ACCESSORY DRIVE...NOTE 2	12	EA		AR						201	
MD	D			66376Y3	<66640>	RING,ACCESSORY,DRIVE-0.507 TO 0.508 IN.THK NOTE 2	12	EA		AR						201	
MD	D			66376Y4	<66640>	RING-0.505 IN.TO 0.506 IN.THK NOTE 2	12	EA		AR						201	
MD	D			66376Y5	<66640>	RING-0.503 IN.TO 0.504 IN.THK NOTE 2	12	EA		AR						201	
MD	D			66376Y6	<66640>	RING-0.501 IN.TO 0.502 IN.THK NOTE 2	12	EA		AR						201	
MD	D			66376Y7	<66640>	RING-0.499 IN.TO 0.500 IN.THK NOTE 2	12	EA		AR						201	
MD	D			66376Y8	<66640>	RING-0.497 IN.TO 0.498 IN.THK NOTE 2	12	EA		AR						201	
MD	D			66376Y9	<66640>	RING-0.495 IN.TO 0.496 IN.THK NOTE 2	12	EA		AR						201	
MD	D			66376Y10	<66640>	RING,ACCESSORY DRIVE-0.493... IN.TO 0.494 IN.THK NOTE 2	12	EA		AR						201	
MD	D			66376Y11	<66640>	RING-0.491 IN.TO 0.492 IN.THK NOTE 2	12	EA		AR						201	
MD	D			66376Y12	<66640>	RING-0.489 IN.TO 0.490 IN.THK NOTE 2	12	EA		AR						201	
MD	D			66376Y13	<66640>	RING-0.487 IN.TO 0.488 IN.THK NOTE 2	12	EA		AR						201	
MD	D			66376Y14	<66640>	RING-0.485 IN.TO 0.486 IN.THK NOTE 2	12	EA		AR						201	
MD	D			66376Y15	<66640>	RING-0.483 IN.TO 0.484 IN.THK NOTE 2	12	EA		AR						201	
MD	D			66376Y16	<66640>	RING-0.481 IN.TO 0.482 IN.THK NOTE 2	12	EA		AR						201	
MD	D			66376Y17	<66640>	RING-0.479 IN.TO 0.480 IN.THK NOTE 2	12	EA		AR						201	
MD	D			66376Y18	<66640>	RING,ACCESSORY DRIVE-0.477... IN.TO 0.478 IN.THK NOTE 2	12	EA		AR						201	

(1) SOURCE, MAINT AND REC CODE (a) SOURCE CODE	(b) MAINT LEVEL	(c) REC CODE	(2) FEDERAL STOCK NUMBER	(3) DESCRIPTION REFERENCE NUMBER			MODELS USABLE ON CH-34C	(4) UNIT OF ISSUE	(5) QTY INC IN UNIT PACK	(6) QTY INC IN UNIT	(7) 30-DAY DS GS MAINT ALW (a) 1-20	(b) 21-50	(c) 51-100	(8) 1-YR ALW PER 100 EQUIP CNTGCY	(9) DEPOT MAINT ALW PER 100 EQUIP	(10) ILLUSTRATION (a) FIG NO	(b) ITEM NO
MD	D			66376Y19	<66640>	RING-0.475 IN.TO 0.476 IN.THK NOTE 2	12	EA		AR						201	
MD	D			66376Y20	<66640>	RING,ACCESSORY DRIVE-0.473... IN.TO 0.474 IN.THK NOTE 2	12	EA		AR						201	
MD	D			66376Y21	<66640>	RING-0.455 IN.TO 0.456 IN.THK NOTE 2	12	EA		AR						201	
MD	D			66376Y22	<66640>	RING-0.451 IN.TO 0.452 IN.THK NOTE 2	12	EA		AR						201	
MD	D			66376Y23	<66640>	RING-0.449 IN.TO 0.450 IN.THK NOTE 2	12	EA		AR						201	
MD	D			66376Y24	<66640>	RING-0.447 IN.TO 0.448 IN.THK NOTE 2	12	EA		AR						201	
MD	D			66376Y25	<66640>	RING-0.445 IN.TO 0.446 IN.THK NOTE 2	12	EA		AR						201	
MD	D			66376Y26	<66640>	RING-0.443 IN.TO 0.444 IN.THK NOTE 2	12	EA		AR						201	
MD	D			66376Y27	<66640>	RING-0.441 IN.TO 0.442 IN.THK NOTE 2	12	EA		AR						201	
MD	D			66376Y28	<66640>	RING-0.439 IN.TO 0.440 IN.THK NOTE 2	12	EA		AR						201	
MD	D			66376Y29	<66640>	RING-0.437 IN.TO 0.438 IN.THK NOTE 2	12	EA		AR						201	
MD	D			66376Y30	<66640>	RING,ACCESSORY DRIVE-0.435... IN.TO 0.436 IN.THK NOTE 2	12	EA		AR						201	
MD	D			66376Y31	<66640>	RING-0.469 IN.TO 0.470 IN.THK NOTE 2	12	EA		AR						201	
MD	D			66376Y32	<66640>	RING-0.471 IN.TO 0.472 IN.THK NOTE 2	12	EA		AR						201	
MD	D			66376Y33	<66640>	RING-0.515 IN.TO 0.516 IN.THK NOTE 2	12	EA		AR						201	
MD	D			66376Y34	<66640>	RING-0.519 IN.TO 0.520 IN.THK NOTE 2	12	EA		AR						201	
MD	D			66376Y35	<66640>	RING-0.523 IN.TO 0.524 IN.THK NOTE 2	12	EA		AR						201	
MD	D			66376Y36	<66640>	RING-0.527 IN.TO 0.528 IN.THK NOTE 2	12	EA		AR						201	
MD	D			66376Y37	<66640>	RING-0.531 IN.TO 0.532 IN.THK NOTE 2	12	EA		AR						201	
MD	D			66376Y38	<66640>	RING-0.535 IN.TO 0.536 IN.THK NOTE 2	12	EA		AR						201	
MD	D			66376Y39	<66640>	RING,ACCESSORY DRIVE..... NOTE 2	12	EA		AR						201	
MD	D			66376Y40	<66640>	RING,ACCESSORY DRIVE..... NOTE 2	12	EA		AR						201	
MD	D			66376Y41	<66640>	RING-0.547 IN.TO 0.548 IN.THK NOTE 2	12	EA		AR						201	
MD	D			66376Y42	<66640>	RING-0.551 IN.TO 0.552 IN.THK NOTE 2	12	EA		AR						201	
MD	D			66376Y43	<66640>	RING,ACCESSORY DRIVE-0.555... IN.TO 0.556 IN.THK NOTE 2	12	EA		AR						201	
MD	D			66376Y44	<66640>	RING,ACCESSORY DRIVE-0.559... IN.TO 0.560 IN.THK NOTE 2	12	EA		AR						201	

(1) SOURCE, MAINT AND REC CODE (a) SOURCE CODE	(b) MAINT LEVEL	(c) REC LEVEL	(2) FEDERAL STOCK NUMBER	REFERENCE NUMBER		(3) DESCRIPTION	MODELS USABLE ON CH-34C	(4) UNIT OF ISSUE	(5) QTY INC IN UNIT PACK	(6) QTY NC IN UNIT	(7) 30-DAY DS/GS MAINT ALW (a) 1-20	(b) 21-50	(c) 51-100	(8) 1-YR ALW PER 100 EQUIP CNTGCY	(9) DEPOT MAINT ALW PER 100 EQUIP	(10) ILLUSTRATION (a) FIG NO	(b) ITEM NO
P	F		2810-479-1276	66327	<66640>	PACKING-ACCESSORY DRIVE.....	12	EA		1	2	2	3		*	201	14
P	F		2810-478-9111	116172	<66640>	RING-ACCESSORY DRIVE AND.....	12	EA		1	*	2	2		*	201	15
						STARTER											
						ATTACHING PARTS											
P	F		5305-206-8750	H62-100811-51	<78189>	SCREW,ASSEMBLED WASHER.....	12	EA		12	*	*	*		*	201	16
						---*---											
P	F		2810-478-9411	127527	<66640>	GASKET.....	12	EA		1	2	3	5		*	201	17
P	D		2810-870-0837	147781	<66640>	COUPLING ACCESSORY DRIVE.....	12	EA		1					*	201	18
P	D		2810-305-1822	170250	<66640>	BEARING,SLEEVE.....	12	EA		1					*	201	19
						NOTE 1											
						MAKEFR											
						1 EA 2810-306-5768 SPACER,SLV											
						NOTE 2											
						MAKEFR											
						1 EA 2810-118-8718 RING											
						IMPELLER DRIVE FLUID.....	12			1						202A	
						COUPLING SEE FIG.183A FOR											
						NHA											
P	D		2810-075-8295	431347	<66640>	.COUPLING AND SHAFT.....	12	EA		1					*	202A	
P	D		2810-076-0590	432766	<66640>	..IMPELLER,BALANCING ASSEMBLY	12	EA		1					*	202A	1
X1				146571	<66640>	...COVER,FLUID COUPLING.....	12	EA		1						202A	
						IMPELLER											
						ATTACHING PARTS											
P	D		5305-530-9323	528D1	<66640>	...SCREW,MACHINE.....	12	EA		24					*	202A	2
P	D		2810-028-1722	171302	<66640>	...CUP,LOCKING.....	12	EA		24					*	202A	3
						---*---											
X1				432765	<66640>	...IMPELLER ASSEMBLY,FLUID...	12	EA		1						202A	
						COUPLING											
P	D		5315-687-5020	2094D319	<66640>	....PIN,STRAIGHT,HEADLESS....	12	EA		1					*	202A	4
P	D		2810-641-6515	137460	<66640>	..GASKET-COPPER.....	12	EA		1					*	202A	5
P	D		2810-016-0129	432767	<66640>	..RUNNER VANE ASSEMBLY.....	12	EA		1					*	202A	6
P	D		2810-017-2676	147106N13	<66640>	..WASHER,THRUST.....	12	EA		1					*	202A	7
P	D		2810-076-0593	146565	<66640>	..GEAR,DRIVE SHAFT.....	12	EA		1					*	202A	8
P	D		5310-076-6090	148913	<66640>	..NUT.....	12	EA		1					*	202A	9
P	D		2810-076-6091	148914	<66640>	..CUP,IMPELLER DRIVE.....	12	EA		1					*	202A	10
P	D		2810-075-8297	431344	<66640>	.PINION AND BUSHING.....	12	EA		1					*	202A	11
P	D		2810-215-9692	430062	<66640>	.SUPPORT AND BUSHING ASSEMBLY	12	EA		1					*	202A	13
						ATTACHING PARTS											
			5315-234-1856	MS24665-155	<96906>	.PIN,COTTER.....	12	HD		6					*	202A	14
			5310-141-3004	AN150433	<88044>	.NUT,CASTELLATED,HEXAGON.....	12	EA		6					*	202A	15
			5310-194-0637	MS9320-10	<96906>	.WASHER,FLAT.....	12	EA		6					*	202A	16
						---*---											
P	D		2810-326-0369	171781	<66640>	..BUSHING,SLEEVE.....	12	EA		1					*	202A	17
P	D		5315-148-0794	13D55	<66640>	..PIN,STRAIGHT,HEADLESS.....	12	EA		1					*	202A	18
P	D		5315-148-0793	13H55	<66640>	..PIN,STRAIGHT,HEADLESS.....	12	EA		AR					*	202A	
						0.002 IN.OVERSIZE ON OD											

(1) SOURCE, MAINT AND REC CODE (a) SOURCE CODE	(b) MAINT LEVEL	(c) REC CODE	(2) FEDERAL STOCK NUMBER	REFERENCE NUMBER		(3) DESCRIPTION	MODELS USABLE ON CH-34C	(4) UNIT OF ISSUE	(5) QTY INC IN UNIT PACK	(6) QTY INC IN UNIT	(7) 30-DAY DS/GS MAINT ALW (a) 1-20	(b) 21-50	(c) 51-100	(8) 1-YR ALW PER 100 EQUIP CNTGCY	(9) DEPOT MAINT ALW PER 100 EQUIP	(10) ILLUSTRATION (a) FIG NO	(b) ITEM NO
P	D		5315-148-0792	13S55	<66640>	..PIN,STRAIGHT,HEADLESS..... 0.010 IN.OVERSIZE ON OD	12	EA		AR					*	202A	
P	D		5315-205-0049	13J55	<66640>	..PIN,STRAIGHT,HEADLESS..... 0.015 IN.OVERSIZE	12	EA		AR					*	202A	
P	D		5330-722-1734	2083D253	<66640>	.PACKING,PREFORMED.....	12	EA		1					*	202A	19
						MAGNETO DRIVE SEE FIG.183A.. FOR NHA	12									203	
			5315-234-1864	MS24665-302	<96906>	.PIN,COTTER.....	12	HD		1					*	203	1
P	D		2810-478-8924	113442	<66640>	.PLUG,MAGNETO AND DRIVE,..... IDLER GEAR	12	EA		1					*	203	2
P	D		2810-316-9778	428217	<66640>	.GEAR AND BUSHING ASSEMBLY...	12	EA		1					*	203	3
P	D		3120-478-8899	113191	<66640>	..BEARING,SLEEVE.....	12	EA		1					*	203	4
P	D		2810-662-2281	113191Y2	<66640>	..BEARING,SLEEVE-0.005 IN.... OVERSIZE ON OD	12	EA		AR					*	203	
P	D		2810-314-4643	137768	<66640>	.TUBE,OIL PUMP TO..... SUPERCHARGER ATTACHING PARTS	12	EA		1					*	203	5
			5306-207-8177	AN103909	<88044>	.BOLT,MACHINE..... ---*---	12	EA		4					*	203	6
			5330-291-3291	AN23878	<88044>	.PACKING,PREFORMED.....	12	EA		1					*	203	7
AF	F			428373	<66640>	.SEAL AND COLLAR ASSEMBLY.... ATTACHING PARTS	12	EA		1						203	
			5305-545-1632	H62-10062-51	<78189>	.SCREW AND WASHER ASSEMBLY... RPL-BY 5305-148-4268	12									203	
P	F		5305-148-4268	4061D1	<66640>	.SCREW,ASSEMBLED WASHER..... RPLS-- 5305-545-1632 ---*---	12	EA		1	*	*	*		*	203	8
			5330-084-7777	41242A	<80201>	..SEAL RPL-BY..... 2810-515-4189	12									203	
P	F		2810-515-4189	244D98	<66640>	..SEAL,PLAIN ENCASED..... RPLS-- 5330-084-7777	12	EA		1	2	2	3		*	203	9
P	F		2810-478-9385	126705	<66640>	..COLLAR,MAGNETO AND..... ACCESSORY	12	EA		1	*	*	*		*	203	10
P	F		2810-440-7428	63684	<66640>	.GASKET.....	12	EA		1	2	2	4		*	203	11
P	D		5340-479-0001	2019D56	<66640>	.RING,RETAINING.....	12	EA		1					*	203	12
P	D		2810-478-9512	129386	<66640>	.LOCK,MAGNETO.....	12	EA		1					*	203	13
P	D		5310-512-9672	129387	<66640>	.NUT,MAGNETO AND ACCESSORY...	12	EA		1					*	203	14
P	D		2810-320-2110	138750	<66640>	.GEAR,SPUR.....	12	EA		1					*	203	15
						FLUID POWER COUPLING DRIVE... SEE FIG.183A FOR NHA	12			1						204	

(1) SOURCE, MAINT AND REC CODE (a) SOURCE CODE	(b) MAINT LEVEL	(c) REC CODE	(2) FEDERAL STOCK NUMBER	REFERENCE NUMBER	(3) DESCRIPTION	MODELS USABLE ON CH-34C	(4) UNIT OF ISSUE	(5) QTY INC IN UNIT PACK	(6) QTY INC IN UNIT	(7) 30-DAY DS GS MAINT ALW (a) 1-20	(b) 21-50	(c) 51-100	(8) 1-YR ALW PER 100 EQUIP CNTGCY	(9) DEPOT MAINT ALW PER 100 EQUIP	(10) ILLUSTRATION (a) FIG NO	(b) ITEM NO
P	F		2810-640-2639	172084	<66640> .COUPLING,SHAFT,FLEXIBLE.....	12	EA		1	*	*	2		*	204	1
				428332N2	<66640> .SEAL AND COLLAR ASSEMBLY.... RPL-BY PN 428332N1	12									204	
AF	F			428332N1	<66640> .SEAL AND COLLAR ASSEMBLY.... RPLS-- PN 428332N2	12	EA		1						204	
					ATTACHING PARTS											
P	F		5305-148-4268	4061D1	<66640> .SCREW,ASSEMBLED WASHER	12	EA		8	*	*	*		*	204	2
					---*---											
P	F		5330-718-4844	244D161	<66640> ..SEAL,PLAIN ENCASED.....	12	EA		1	*	*	*		*	204	3
P	F		2810-544-1007	138983	<66640> ..COLLAR,GENERATOR DRIVE..... OIL SEAL	12	EA		1	*	*	*		*	204	4
P	F		2810-291-0442	170026	<66640> ..GASKET.....	12	EA		1	*	2	2		*	204	5
			5315-234-1864	MS24665-302	<96906> .PIN,COTTER.....	12	HD		1					*	204	6
			5310-271-6624	AN121554	<88044> .NUT,CASTELLATED,HEXAGON.....	12	EA		1					*	204	7
P	D		2810-512-9813	137766	<66640> .WASHER,GENERATOR DRIVE.....	12	EA		1					*	204	8
P	D		2810-320-2133	171772	<66640> .GEAR,SPUR.....	12	EA		1					*	204	9
P	D		2810-656-3134	147250	<66640> .SHAFT RPLS-- 2810-213-9634.	12	EA		1					*	204	10
			5305-684-9773	AN115756	<88044> .SCREW,MACHINE.....	12	EA		1					*	204	11
			5315-234-1864	MS24665-302	<96906> .PIN,COTTER.....	12	HD		1					*	204	12
P	D		2810-478-8924	113442	<66640> .PLUG,MAGNETO AND DRIVE,..... IDLER GEAR	12	EA		1					*	204	13
P	D		2810-215-9690	430060	<66640> .GEAR AND BUSHING ASSEMBLY...	12	EA		1					*	204	14
P	D		2810-343-3857	138804	<66640> ..BUSHING,FUEL PUMP DRIVE....	12	EA		2					*	204	15
P	D		2810-632-7158	138804Y2	<66640> ..BUSHING-0.005 IN.OVERSIZE.. ON OD	12	EA		AR					*	204	
X1				171771	<66640> .GEAR,FLUID POWER PUMP DRIVE. IDLER	12	EA		1						204	
P	D		2810-217-3765	171773	<66640> .SUPPORT,FLUID POWER PUMP.... ATTACHING PARTS	12	EA		1					*	204	16
			5306-180-3372	AN103009	<88044> .BOLT,MACHINE.....	12	EA		4					*	204	17
					---*---											
			5330-250-1220	AN123884	<88044> .PACKING,PREFORMED.....	12	EA		1					*	204	18
					OIL PUMP AND FUEL PUMP..... DRIVES SEE FIG.183A FOR NHA	12			1						205	
P	D		2810-316-9779	428613	<66640> .GEAR AND RETAINER ASSEMBLY..	12	EA		1					*	205	1
X1				113960	<66640> ..RETAINER,GEAR SPRING.....	12	EA		1						205	2
P	D		2810-346-4197	110424	<66640> .SPRING,HELICAL,COMPRESSION..	12	EA		1					*	205	3
			5315-234-1864	MS24665-302	<96906> .PIN,COTTER.....	12	HD		1					*	205	4
P	D		2810-478-8924	113442	<66640> .PLUG,MAGNETO AND DRIVE,..... IDLER GEAR	12	EA		1					*	205	5
P	D		2810-217-3712	428219	<66640> .GEAR AND BUSHING ASSEMBLY...	12	EA		1					*	205	6
P	D		2810-343-3857	138804	<66640> ..BUSHING,FUEL PUMP DRIVE....	12	EA		2					*	205	7
				138804Y1	<66640> ..BUSHING-0.003 IN.OVERSIZE.. ON OD	12	EA		AR						205	
P	D		2810-632-7158	138804Y2	<66640> ..BUSHING-0.005 IN.OVERSIZE..	12	EA		AR					*	205	

(1) SOURCE, MAINT AND REC CODE (a) SOURCE CODE	(b) MAINT LEVEL	(c) REC CODE	(2) FEDERAL STOCK NUMBER	REFERENCE NUMBER	(3) DESCRIPTION	MODELS USABLE ON CH-34C	(4) UNIT OF ISSUE	(5) QTY INC IN UNIT PACK	(6) QTY INC IN UNIT	(7) 30-DAY DS-GS MAINT ALW (a) -20	(b) 21-50	(c) 51-100	(8) 1-YR ALW PER 100 EQUIP CNTGCY	(9) DEPOT MAINT ALW PER 100 EQUIP	(10) ILLUSTRATION (a) FIG NO	(b) ITEM NO
					CONTINUED ON OD										205	
P	D		2810-217-3669	138753 <66640>	.SUPPORT,FUEL PUMP DRIVE..... ATTACHING PARTS	12	EA		1					*	205	8
			5306-180-3372	AN103009 <88044>	.BOLT,MACHINE..... ---*---	12	EA		4					*	205	9
			5330-291-3291	AN23878 <88044>	.PACKING,PREFORMED.....	12	EA		1					*	205	10
P	D		2810-217-3696	170457 <66640>	.PLATE,FUEL PUMP DRIVE GEAR.. ATTACHING PARTS	12	EA		1					*	205	11
			5315-234-1856	MS24665-155 <96906>	.PIN,COTTER.....	12	HD		2					*	205	12
			5310-268-6049	AN121552 <88044>	.NUT,CASTELLATED,HEXAGON.....	12	EA		2					*	205	13
			5310-194-0637	MS9320-10 <96906>	.WASHER,FLAT..... ---*---	12	EA		2					*	205	14
P	D		2810-215-9655	429191 <66640>	.GEAR AND PLUG ASSEMBLY,FUEL.	12	EA		1					*	205	15
X1				170470 <66640>	..PLUG,INTERMEDIATE GEAR..... WHEN EXHTD RQTN NHA 2810-215-9655	12	EA		1						205	16
			2810-316-9777	428214 <66640>	.GEAR AND PLUG ASSEMBLY,..... FUEL PUMP DRIVE RPL-BY 2810-626-1283	12									205	
P	D		2810-626-1283	147445 <66640>	.GEAR,FUEL PUMP DRIVE..... RPLS-- 2810-316-9777	12	EA		1					*	205	17
X1				61951 <66640>	..PLUG,FUEL PUMP DRIVE..... SHAFT	12	EA		1						205	
P	F		2810-479-1359	68610 <66640>	..GASKET.....	12	EA		1	*	2	2		110	205	
			2810-118-8489	68668N3 <66640>	.COVER PLATE,ACCESS..... RPL-BY 2995-774-7455	12									205	
P	F		2995-774-7455	AN100039 <88044>	.COVER PLATE,ACCESS..... RPLS--2810-118-8489	12	EA		1	*	*	*		*	205	18
					ATTACHING PARTS											
			5310-088-0553	MS21044N5 <96906>	.NUT,SELF-LOCKING,HEXAGON....	12	HD		4	*	*	*		*	205	19
			5310-194-0636	MS9320-11 <96906>	.WASHER,FLAT..... ---*---	12	EA		4	*	*	*		*	205	20
			2810-641-6519	67575 <66640>	.GASKET RPL-BY 2810-478-8910	12									205	
P	F		2810-478-8910	113340 <66640>	.GASKET RPLS-- 2810-641-6519	12	EA		1	3	6	13		*	205	21
P	F		5330-977-7495	39677A <80201>	.SEAL,PLAIN ENCASED.....	12	EA		1	*	*	*		*	205	22
P	D		2810-217-3713	428234 <66640>	.SUPPORT ASSEMBLY.....	12	EA		1					*	205	23
P	D		2810-533-4911	138825 <66640>	..BUSHING,SLEEVE.....	12	EA		1					*	205	24
			5315-282-1520	13D6 <66640>	..PIN,STRAIGHT,HEADLESS..... RPL-BY 5315-048-8056	12									205	
P	D		5315-048-8056	13H6 <66640>	..PIN,STRAIGHT,HEADLESS..... 0.002 IN.OVERSIZE ON OD RPLS-- 5315-282-1520	12	EA		AR					*	205	25
P	D		5315-141-6268	13S6 <66640>	..PIN,STRAIGHT,HEADLESS..... 0.010 IN.OVERSIZE ON OD	12	EA		AR					*	205	
P	D		5315-148-8949	13J6 <66640>	..PIN,STRAIGHT,HEADLESS..... 0.015 IN.OVERSIZE ON OD	12	EA		AR					*	205	
P	F		2810-479-1359	68610 <66640>	..GASKET.....	12	EA		1	*	REF	REF		*	205	26

(1) SOURCE, MAINT AND REC CODE (a) SOURCE CODE	(b) MAINT LEVEL	(c) REC CODE	(2) FEDERAL STOCK NUMBER	REFERENCE NUMBER		(3) DESCRIPTION	MODELS USABLE ON CH-34C	(4) UNIT OF ISSUE	(5) QTY INC IN UNIT PACK	(6) QTY INC IN UNIT	(7) 30-DAY DS/GS MAINT ALW (a) 1-20	(b) 21-50	(c) 51-100	(8) 1-YR ALW PER 100 EQUIP CNTGCY	(9) DEPOT MAINT ALW PER 100 EQUIP	(10) ILLUSTRATION (a) FIG NO	(b) ITEM NO
P	D		2810-796-5093	432908	<66640>	COVER,MACHINE ASSEMBLY-..... SUPERCHARGER,REAR SEE FIG. 183A FOR NHA	12	EA		1					*	206	1
						ATTACHING PARTS											
			5306-207-1666	AN103022	<88044>	BOLT,MACHINE.....	12	EA		2					*	206	2
			5310-088-0553	MS21044N5	<96906>	NUT,SELF-LOCKING,HEXAGON.....	12	HD		14					*	206	3
			5310-194-0636	MS9320-11	<96906>	WASHER,FLAT.....	12	EA		16					*	206	4
			5310-596-6095	105	<66640>	NUT,EXTENDED WASHER RPL-BY.. 5310-515-9698	12									206	
P	D		5310-515-9698	6122D2	<66640>	NUT,EXTENDED WASHER..... RPLS--5310-596-6095	12	EA		7					*	206	5
			5310-194-0636	MS9320-11	<96906>	WASHER,FLAT.....	12	EA		7					*	206	6
P	D		5305-147-9503	2070D11	<66640>	SCREW,MACHINE.....	12	EA		3					*	206	7
						---*---											
P	D		5305-033-0418	2070D1	<66640>	.SCREW,MACHINE.....	12	EA		3					*	206	8
			5330-199-5873	MS35769-5	<96906>	.GASKET.....	12	LL		3					*	206	9
			4730-203-6973	MS9015-01	<96906>	.PLUG,MACHINE THREAD.....	12	EA		1					*	206	10
			5330-263-8012	AN123857	<88044>	.PACKING,PREFORMED.....	12	EA		1					*	206	11
			4730-288-8054	AN933B1	<88044>	.PLUG,PIPE.....	12	EA		1					*	206	12
			4730-277-6352	AN932-1	<88044>	.PLUG,PIPE.....	12	EA		2					*	206	13
			4730-277-6352	AN932-1	<88044>	.PLUG,PIPE.....	12	EA		1					*	206	14
			4730-278-3462	AN932-2	<88044>	.PLUG,PIPE.....	12	EA		1					*	206	15
			4730-278-3462	AN932-2	<88044>	.PLUG,PIPE.....	12	EA		1					*	206	16
			4730-684-4363	MS9015-07	<96906>	.PLUG,MACHINE THREAD.....	12	EA		1					*	206	17
			5330-242-6640	AN123864	<88044>	.PACKING,PREFORMED.....	12	EA		1					*	206	18
			4730-289-5531	AN125913	<88044>	.PLUG,MACHINE THREAD.....	12	EA		1					*	206	19
			5330-291-3283	AN123868	<88044>	.PACKING,PREFORMED.....	12	EA		1					*	206	20
P	D		2810-479-0371	25937	<66640>	.BEARING,SLEEVE.....	12	EA		1					*	206	21
P	D		2810-479-0372	25937Y10	<66640>	.BEARING,SLEEVE-0.010 IN..... OVERSIZE ON OD	12	EA		AR					*	206	
P	D		2810-288-5915	25937Y20	<66640>	.BEARING,SLEEVE-0.020 IN..... OVERSIZE ON OD	12	EA		AR					*	206	
P	D		2810-048-8718	138862	<66640>	.BUSHING,SLEEVE.....	12	EA		2					*	206	22
P	D		3120-662-1738	138862Y1	<66640>	.BUSHING,SLEEVE-0.005 IN..... OVERSIZE ON OD	12	EA		AR					*	206	
P	D		3120-662-1746	138862Y2	<66640>	.BUSHING,SLEEVE-0.010 IN..... OVERSIZE ON OD	12	EA		AR					*	206	
P	D		3120-662-1754	138870	<66640>	.BUSHING,SLEEVE.....	12	EA		1					*	206	23
P	D		3120-662-1753	138870Y2	<66640>	.BUSHING,SLEEVE-0.010 IN..... OVERSIZE ON OD	12	EA		AR					*	206	
P	D		3120-662-1752	138870Y3	<66640>	.BUSHING,SLEEVE-0.020 IN..... OVERSIZE ON OD	12	EA		AR					*	206	
P	D		2810-675-3377	147690	<66640>	.BUSHING.....	12	EA		1					*	206	24
P	D		2810-675-3378	147690Y1	<66640>	.BUSHING,GENERATOR DRIVE.....	12	EA		AR					*	206	
P	D		2925-860-0600	147690Y2	<66640>	.BUSHING-0.010 IN.OVERSIZE... ON OD	12	EA		AR					*	206	
						ATTACHING PARTS											
			5306-180-3372	AN103009	<88044>	.BOLT,MACHINE.....	12	EA		2					*	206	25
						---*---											
			5315-088-6272	MS9486-28	<96906>	.PIN,STRAIGHT,HEADLESS.....	12	EA		1					*	206	26
P	D		2810-305-1822	170250	<66640>	.BEARING,SLEEVE.....	12	EA		1					*	206	27
P	D		2810-525-7430	170250Y1	<66640>	.BEARING,SLEEVE-0.005 IN.....	12	EA		AR					*	206	

(1) SOURCE, MAINT AND REC CODE (a) SOURCE CODE	(b) MAINT LEVEL	(c) REC CODE	(2) FEDERAL STOCK NUMBER	REFERENCE NUMBER	(3) DESCRIPTION	MODELS USABLE ON CH-34C	(4) UNIT OF ISSUE	(5) QTY INC IN UNIT PACK	(6) QTY INC IN UNIT	(7) 30-DAY DS GS MAINT ALW (a) 1-20	(b) 21-50	(c) 51-100	(8) 1-YR ALW PER 100 EQUIP CNTGCY	(9) DEPOT MAINT ALW PER 100 EQUIP	(10) ILLUSTRATION (a) FIG NO	(b) ITEM NO
					CONTINUED										206	
					OVERSIZE ON OD & STD ON ID											
P	D		2810-525-7435	170250Y2 <66640>	.BUSHING,SLEEVE-0.010 IN.....	12	EA		AR					*	206	
					OVERSIZE ON OD & STD ON ID											
			2810-525-7431	170250Y10 <66640>	.BEARING,SLEEVE RPL-BY.....	12									206	
					2810-525-7432											
			2810-525-7436	170250Y3 <66640>	.BEARING,SLEEVE RPL-BY.....	12									206	
					2810-525-7432											
P	D		2810-525-7432	170250Y11 <66640>	.BEARING,SLEEVE-0.005 IN.....	12	EA		AR					*	206	
					OVERSIZE ON OD,0.030 IN.											
					OVERSIZE ON FLANGE THK,STD											
					ON ID RPLS--											
					2810-525-7431,											
					2810-525-7436											
P	D		2810-525-7433	170250Y12 <66640>	.BUSHING,SLEEVE-0.010 IN.....	12	EA		AR					*	206	
					OVERSIZE ON OD,0.030 IN.											
					OVERSIZE ON FLANGE THK,STD											
					ON ID											
			2810-987-3291	170250Y14 <66640>	.BEARING,SLEEVE-STD ON OD,...	12	EA		AR						206	
					STD ON FLANGE THK,0.005											
					IN.UNDERSIZE ON ID USE											
					UNTIL EXHAUSTED,NO											
					REPLACEMENT											
			2810-987-3292	170250Y15 <66640>	.BUSHING,SLEEVE-0.005IN.....	12	EA		AR						206	
					OVERSIZE ON OD,STD ON											
					FLANGE THK,0.005 IN.											
					UNDERSIZE ON ID USE UNTIL											
					EXHAUSTED,NO REPLACEMENT											
P	D		2810-097-4278	138845 <66640>	.BUTTON,FUEL PUMP DRIVE.....	12	EA		1					*	206	28
P	D		2810-386-4366	133973 <66640>	.DOWEL,SUPERCHARGER REAR.....	12	EA		1					*	206	29
P	D		2810-478-9731	134007 <66640>	.DOWEL,SUPERCHARGER REAR.....	12	EA		1					*	206	30
			5315-241-2921	AN122693 <88044>	.PIN,STRAIGHT,HEADLESS.....	12	EA		1					*	206	31
			5315-241-2921	AN122693 <88044>	.PIN,STRAIGHT,HEADLESS.....	12	EA		1					*	206	32
			5315-241-2921	AN122693 <88044>	.PIN,STRAIGHT,HEADLESS.....	12	EA		1					*	206	33
			5315-241-2921	AN122693 <88044>	.PIN,STRAIGHT,HEADLESS.....	12	EA		1					*	206	34
P	D		5315-148-8950	13H35 <66640>	.PIN,STRAIGHT,HEADLESS.....	12	EA		AR					*	206	
					0.002 IN.OVERSIZE ON OD											
P	D		5315-148-0795	13S35 <66640>	.PIN,STRAIGHT,HEADLESS.....	12	EA		AR					*	206	
					0.010 IN.OVERSIZE ON OD											
P	D		5315-282-6867	13J35 <66640>	.PIN,STRAIGHT,HEADLESS.....	12	EA		AR					*	206	
					0.015 IN.OVERSIZE ON OD											
P	F		5340-595-0636	5042H2 <66640>	.INSERT,SCREW THREAD.....	12	EA		AR	*	*	*		*	206	35
P	F		5340-595-0637	5042S2 <66640>	.INSERT,SCREW THREAD.....	12	EA		AR	*	*	*		*	206	
P	F		5340-386-4441	5042J2 <66640>	.INSERT,SCREW THREAD.....	12	EA		AR	*	*	*		*	206	
P	D		4730-203-0373	5042H3 <66640>	.ADAPTER BUSHING-.....	12	EA		AR					*	206	36
					0.003 IN.OVERSIZE ON OD											
P	D		2810-479-1105	5042S3 <66640>	.BUSHING-OPEN SCREW-0.007....	12	EA		AR					*	206	
					IN.OVERSIZE ON OD											
P	D		2810-386-4442	5042J3 <66640>	.BUSHING,OIL SUMP TO.....	12	EA		AR					*	206	
					SUPERCHARGER-0.012 IN.											
					OVERSIZE ON OD											
			5307-149-4567	2028H8 <66640>	.STUD,PLAIN.....	12									206	

(1) SOURCE, MAINT AND REC CODE (a) SOURCE CODE	(b) MAINT LEVEL	(c) REC CODE	(2) FEDERAL STOCK NUMBER	REFERENCE NUMBER	(3) DESCRIPTION	MODELS USABLE ON CH-34C	(4) UNIT OF ISSUE	(5) QTY INC IN UNIT PACK	(6) QTY INC IN UNIT	(7) 30-DAY DS GS MAINT ALW (a) 1-20	(b) 21-50	(c) 51-100	(8) 1-YR ALW PER 100 EQUIP CNTGCY	(9) DEPOT MAINT ALW PER 100 EQUIP	(10) ILLUSTRATION (a) FIG NO	(b) ITEM NO
					CONTINUED										206	
					RPL-BY 5307-208-3845											
P	D		5307-208-3845	401806H <71664>	.STUD,PLAIN-0.003 IN.....	12	EA		AR					*	206	37
					OVERSIZE ON OD											
P	D		5307-149-4903	2028S8 <66640>	.STUD,PLAIN-0.007 IN.....	12	EA		AR					*	206	
					OVERSIZE ON OD											
P	D		5307-297-8412	2028J8 <66640>	.STUD,PLAIN-0.012 IN.....	12	EA		AR					*	206	
					OVERSIZE ON OD											
P	D		5307-149-4853	2043H76 <66640>	.STUD,PLAIN-0.003 IN.....	12	EA		AR					*	206	38
					OVERSIZE ON OD											
P	D		5307-149-4855	2043S76 <66640>	.STUD,PLAIN-0.007 IN.....	12	EA		AR					*	206	
					OVERSIZE ON OD											
P	F		5307-215-9641	2043J76 <66640>	.STUD,PLAIN-0.012 IN.....	12	EA		AR	*	*	*		*	206	
					OVERSIZE ON OD											
P	F		5307-479-0074	2049H60 <66640>	.STUD,PLAIN-0.003 IN.....	12	EA		AR	*	*	*		*	206	39
					OVERSIZE ON OD											
P	F		5307-062-4381	2049S60 <66640>	.STUD,PLAIN-0.007 IN.....	12	EA		AR	*	*	*		*	206	
					OVERSIZE ON OD											
P	F		5307-297-8320	2049J60 <66640>	.STUD,PLAIN-0.012 IN.....	12	EA		AR	*	*	*		*	206	
					OVERSIZE ON OD											
P	F		5307-169-3518	2134H130 <66640>	.STUD,STEPPED-0.003 IN.....	12	EA		AR	*	*	*		*	206	40
					OVERSIZE ON OD											
P	F		5307-166-1169	2134S130 <66640>	.STUD,STEPPED-0.007 IN.....	12	EA		AR	*	*	*		*	206	
					OVERSIZE ON OD											
P	F		5307-219-7689	2134J130 <66640>	.STUD,STEPPED-0.012 IN.....	12	EA		AR	*	*	*		*	206	
					OVERSIZE ON OD											
			5307-207-7567	2137H65 <66640>	.STUD,STEPPED.....	12									206	
					RPL-BY 5307-584-5533											
			5307-584-5533	AN157127 <88044>	.STUD,STEPPED-0.003 IN.....	12	EA		AR					*	206	41
					OVERSIZE ON OD											
					RPLS-- 5307-207-7567											
			5307-639-6714	AN157128 <88044>	.STUD,STEPPED-0.006 IN.....	12	EA		AR					*	206	
					OVERSIZE ON OD											
			5307-208-7806	2137S65 <66640>	.STUD,STEPPED.....	1									206	
					RPL-BY 5307-639-6715											
			5307-639-6715	AN157129 <88044>	.STUD,STEPPED-0.009 IN.....	12	EA		AR					*	206	
					OVERSIZE ON OD											
					RPLS-- 5307-208-7806											
			5307-208-7805	2137J65 <66640>	.STUD,STEPPED.....	12									206	
					RPL-BY 5307-616-2533											
			5307-616-2533	AN157130 <88044>	.STUD,STEPPED-0.012 IN.....	12	EA		AR					*	206	
					OVERSIZE ON OD											
					RPLS-- 5307-208-7805											
			5307-276-2634	AN161333 <88044>	.STUD,STEPPED-0.003 IN.....	12	EA		AR					*	206	42
					OVERSIZE ON OD											
			5307-276-2657	AN161334 <88044>	.STUD,STEPPED-0.006 IN.....	12	EA		AR	*	*	*		*	206	
					OVERSIZE ON OD											
			5307-206-2531	AN161335 <88044>	.STUD,STEPPED-0.009 IN.....	12	EA		AR	*	*	*		*	206	
					OVERSIZE ON OD											
			5307-206-2530	AN161336 <88044>	.STUD,STEPPED-.....	12	EA		AR	*	*	*		*	206	
					0.012 IN.OVERSIZE ON OD											
			5307-206-2979	AN158933 <88044>	.STUD,STEPPED-0.003 IN.....	12	EA		AR	*	*	*		*	206	43

(1) SOURCE, MAINT AND REC CODE (a) SOURCE CODE	(b) MAINT LEVEL	(c) REC CODE	(2) FEDERAL STOCK NUMBER	REFERENCE NUMBER		(3) DESCRIPTION	MODELS USABLE ON CH-34C	(4) UNIT OF ISSUE	(5) QTY INC IN UNIT PACK	(6) QTY INC IN UNIT	(7) 30-DAY DS GS MAINT ALW (a) 1-20	(b) 21-50	(c) 51-100	(8) 1-YR ALW PER 100 EQUIP CNTGCY	(9) DEPOT MAINT ALW PER 100 EQUIP	(10) ILLUSTRATION (a) FIG NO	(b) ITEM NO
						CONTINUED										206	43
						OVERSIZE ON OD											
			5307-206-2980	AN158934	<88044>	.STUD,STEPPED-0.006 IN.....	12	EA		AR	*	*	*		*	206	
						OVERSIZE ON OD											
			5307-206-2981	AN158935	<88044>	.STUD,STEPPED-0.009 IN.....	12	EA		AR	*	*	*		*	206	
						OVERSIZE ON OD											
X1				148157	<66640>	.COVER.....	12	EA		1						206	
			4730-082-5965	MS49005-2	<96906>	.PLUG,PIPE.....	12	EA		1	*	*	*		*	206	
P	D		2810-344-1402	171818	<66640>	.GASKET,SUPERCHARGER REAR....	12	EA		1					*	206	44
P	F		4730-640-5773	137046	<66640>	.FLANGE,PIPE.....	12	EA		1	*	*	*		*	206	45
						ATTACHING PARTS											
			5306-282-3340	AN102910	<88044>	.BOLT,MACHINE.....	12	EA		3	*	*	*		*	206	46
						---*---											
			5330-291-3287	5065D24	<66640>	.PACKING,PREFORMED RPL-BY...	12									206	
						5330-989-6030											
P	F		5330-989-6030	2083D280	<66640>	.PACKING,PREFORMED.....	12	EA		1	*	*	2		*	206	47
						RPLS--5330-291-3287											
			4730-289-3019	MS9015-04	<96906>	.PLUG,MACHINE THREAD.....	12	EA		1	REF	REF	REF	REF	*	206	48
P	F		5330-803-2652	2083D240	<66640>	.PACKING,PREFORMED.....	12	EA		1	2	4	8		*	206	49
P	F		2810-304-0034	139150	<66640>	.ADAPTER,FLANGE OIL PRESS....	12	EA		1	*	*	*		*	206	50
			5330-291-3285	AN123871	<88044>	.PACKING,PREFORMED.....	12	EA		1	*	*	*		*	206	51
P	F		2810-251-9354	63669	<66640>	.PACKING,PREFORMED.....	12	EA		3	REF	REF	REF		*	206	52
P	D		5330-722-0101	2083D251	<66640>	.PACKING,PREFORMED.....	12	EA		1					*	206	53
P	F		2810-210-5460	429100	<66640>	.COVER AND PLUG ASSEMBLY.....	12	EA		1	*	*	*		*	206	54
						ATTACHING PARTS											
			5310-950-0039	MS21044N6	<96906>	.NUT,SELF-LOCKING,HEXAGON....	12	HD		18	*	*	*		*	206	55
			5310-184-8974	MS9320-12	<96906>	.WASHER,THRUST.....	12	EA		18	*	*	*		*	206	56
						---*---											
			4730-278-2980	AN933D1	<88044>	..PLUG,PIPE.....	12	EA		1	*	*	*		*	206	57
X1				170251	<66640>	..COVER,GENERATOR.....	12	EA		1						206	
						SUBSTITUTING											
			2810-478-9924	14981	<66640>	.GASKET.....	12									206	
						RPL-BY 2810-118-7665											
P	F		2810-118-7665	67410	<66640>	.GASKET RPLS-- 2810-478-9924	12	EA		1	2	2	5		*	206	58
P	F		2810-210-5461	429101	<66640>	.COVER AND PLUG ASSEMBLY.....	12	EA		1	*	*	*		*	206	59
						ATTACHING PARTS											
			5310-088-0553	MS21044N5	<96906>	.NUT,SELF-LOCKING,HEXAGON....	12	HD		4	*	*	*		*	206	60
						---*---											
			4730-278-2980	AN933D1	<88044>	.PLUG,PIPE.....	12	EA		1	*	*	*		*	206	61
			5330-599-5989	AN4044-1	<88044>	.GASKET.....	12	EA		1	REF	REF	REF		*	206	62
P	F		2810-396-4317	428492	<66640>	.ADAPTER ASSEMBLY,FLUID.....	12	EA		1	*	*	*		*	206	63
						PUMP DRIVE											
						ATTACHING PARTS											
			5310-950-0039	MS21044N6	<96906>	.NUT,SELF-LOCKING,HEXAGON....	12	HD		6	*	*	*		*	206	64
			5310-184-8974	MS9320-12	<96906>	.WASHER,FLAT.....	12	EA		6	*	*	*		*	206	65
						---*---											
			5315-241-2917	AN122717	<88044>	.PIN,STRAIGHT,HEADLESS.....	12	EA		1	*	*	*		*	206	66
P	D		5315-205-0027	29H10	<66640>	.PIN,STRAIGHT,HEADLESS.....	12	EA		AR					*	206	
						0.002 IN.OVERSIZE ON OD											
			5315-205-0029	29S10	<66640>	.PIN,STRAIGHT,HEADLESS.....	12									206	
						0.010 IN.OVERSIZE ON OD											
						RPL-BY 5315-559-8496											

(1) SOURCE, MAINT AND REC CODE (a) SOURCE CODE	(b) MAINT LEVEL	(c) REC CODE	(2) FEDERAL STOCK NUMBER	REFERENCE NUMBER		(3) DESCRIPTION	MODELS USABLE ON CH-34C	(4) UNIT OF ISSUE	(5) QTY INC IN UNIT PACK	(6) QTY INC IN UNIT	(7) 30-DAY DS GS MAINT ALW (a) 1-20	(b) 21-50	(c) 51-100	(8) 1-YR ALW PER 100 EQUIP CNTGCY	(9) DEPOT MAINT ALW PER 100 EQUIP	(10) ILLUSTRATION (a) FIG NO	(b) ITEM NO
P	D		5315-559-8496	29P10	<66640>	.PIN,STRAIGHT,HEADLESS..... 0.010 IN.OVERSIZE ON OD RPLS-- 5315-205-0029	12	EA		AR					*	206	
P	F		5315-152-2658	29J10	<66640>	.PIN,STRAIGHT,HEADLESS..... 0.015 IN.OVERSIZE ON OD	12	EA		AR	*	*	*		*	206	
P	F		5315-080-8948	29T10	<66640>	.PIN,STRAIGHT,HEADLESS..... 0.015 IN.OVERSIZE ON OD	12	EA		AR	*	*	*		*	206	
			5307-208-7035	AN151156	<88044>	.STUD,STEPPED.....	12	EA		4	*	*	*		*	206	67
			5307-207-6344	AN151157	<88044>	.STUD,STEPPED-0.003 IN..... OVERSIZE ON OD	12	EA		AR	*	*	*		*	206	
			5307-208-7043	AN151158	<88044>	.STUD,STEPPED-0.006 IN..... OVERSIZE ON OD	12	EA		AR	*	*	*		*	206	
			5307-550-0498	AN151159	<88044>	.STUD,STEPPED-0.009 IN..... OVERSIZE ON OD	12	EA		AR	*	*	*		*	206	
			5307-208-7042	AN151160	<88044>	.STUD,STEPPED-0.012 IN..... OVERSIZE ON OD	12	EA		AR	*	*	*		*	206	
P	F		2810-118-7665	67410	<66640>	.GASKET.....	12	EA		1	REF	REF	REF		*	206	68
			5340-281-6623	MS16624-125	<96906>	.RING,RETAINING.....	12	EA		1					*	206	69
P	D		2810-092-1751	171800	<66640>	.PLUG,ACCESSORY DRIVE GEAR... SUBSTITUTING	12	EA		1					*	206	70
P	D		5330-803-2651	2083D254	<66640>	.PACKING,PREFORMED.....	12	EA		2					*	206	71
			5330-250-1220	AN123884	<88044>	.PACKING,PREFORMED.....	12	EA		1					*	206	72
P	D		2810-217-3707	171791	<66640>	.SLEEVE,ACCESSORY DRIVE GEAR.	12	EA		1					*	206	73
P	D		2810-215-9637	171789	<66640>	.COVER,ACCESSORY DRIVE IDLER. ATTACHING PARTS	12	EA		1					*	206	74
			5306-207-8177	AN103909	<88044>	.BOLT,MACHINE..... ---*---	12	EA		4					*	206	75
			5330-291-3291	AN23878	<88044>	.PACKING,PREFORMED.....	12	EA		1					*	206	76
P	D		2810-215-9636	171788	<66640>	.COVER,GENERATOR DRIVE,GEAR.. ATTACHING PARTS	12	EA		1					*	206	77
			5306-180-3372	AN103009	<88044>	.BOLT,MACHINE..... ---*---	12	EA		2					*	206	78
			5330-250-1221	AN123886	<88044>	.PACKING,PREFORMED.....	12	EA		1					*	206	79
P	D		2810-215-9635	171787	<66640>	.COVER,GENERATOR DRIVE IDLER. ATTACHING PARTS	12	EA		1					*	206	80
			5306-180-3372	AN103009	<88044>	.BOLT,MACHINE..... ---*---	12	EA		4					*	206	81
			5330-250-1220	AN123884	<88044>	.PACKING,PREFORMED.....	12	EA		1					*	206	82

(1) SOURCE, MAINT AND REC CODE (a) SOURCE CODE	(b) MAINT LEVEL	(c) REC CODE	(2) FEDERAL STOCK NUMBER	REFERENCE NUMBER	(3) DESCRIPTION	MODELS USABLE ON CH-34C	(4) UNIT OF ISSUE	(5) QTY INC IN UNIT PACK	(6) QTY INC IN UNIT	(7) 30-DAY DS-GS MAINT ALW (a) 1-20	(b) 21-50	(c) 51-100	(8) 1-YR ALW PER 100 EQUIP CNTGCY	(9) DEPOT MAINT ALW PER 100 EQUIP	(10) ILLUSTRATION (a) FIG NO	(b) ITEM NO
					FRONT OIL SUMP AND PUMP.....	12			1						207	
					SEE FIG.183A FOR NHA											
P	O	R	2810-215-9677	430027 <66640>	SUMP AND STUDDING ASSEMBLY...	12	EA		1	*	*	*		*	207	
					ATTACHING PARTS											
			5310-857-4948	MS21045L6 <96906>	NUT,SELF-LOCKING,HEXAGON.....	12	HD		4	*	*	*		*	207	1
P	O		5310-596-8794	2093D43 <66640>	WASHER,BALL SOCKET.....	12	EA		4	*	*	*		*	207	2
			5310-275-2016	MS20364-624A <96906>	NUT,SELF-LOCKING,HEXAGON.....	12	HD		4	*	*	*		*	207	3
			5310-184-8974	MS9320-12 <96906>	WASHER,FLAT.....	12	EA		4	*	*	*		*	207	4
					---*---											
X1				171717 <66640>	.OIL SUMP.....	12	EA		1						207	5
			4730-554-8139	AN933D2 <88044>	.PLUG,PIPE.....	12	EA		1	*	*	*		*	207	6
			4730-585-6749	AN933B3 <88044>	.PLUG,PIPE.....	12	EA		1	*	*	*		*	207	
P	D		4730-529-4894	2132D11 <66640>	.PLUG,PIPE.....	12	EA		1					*	207	7
P	D		4730-580-6361	2132D12 <66640>	.PLUG,PIPE.....	12	EA		2					*	207	8
P	D		4730-595-0869	2132D14 <66640>	.PLUG,PIPE.....	12	EA		1					*	207	9
P	D		4730-202-9463	2132D15 <66640>	.PLUG,PIPE.....	12	EA		1					*	207	10
P	O		2810-217-3671	138896 <66640>	.CONNECTOR,ROCKER BOX SUMP...	12	EA		1	*	*	*		*	207	11
P	O		2810-076-6042	138896Y1 <66640>	.CONNECTOR,ROCKER BOX,SUMP...	12	EA		AR	*	*	*		*	207	
					0.003 IN.OVERSIZE ON OD											
P	D		5340-479-1107	5043H2 <66640>	.INSERT,SCREW THREAD.....	12	EA		AR					*	207	12
P	D		4730-293-7391	5043S2 <66640>	.BUSHING,MACHINE THREAD.....	12	EA		AR					*	207	
					0.007 IN.OVERSIZE ON OD											
P	D		2810-386-4443	5043J2 <66640>	.BUSHING,BIND SCREW REAR-....	12	EA		AR					*	207	
					0.012 IN.OVERSIZE ON OD											
P	D		4730-203-0373	5042H3 <66640>	.ADAPTER BUSHING-.....	12	EA		AR					*	207	13
					0.003 IN.OVERSIZE											
P	D		2810-479-1105	5042S3 <66640>	.BUSHING-OPEN SCREW,0.007....	12	EA		AR					*	207	
					IN.OVERSIZE ON OD											
P	D		2810-386-4442	5042J3 <66640>	.BUSHING,OIL SUMP TO.....	12	EA		AR					*	207	
					SUPERCHARGER-0.012 IN.											
					OVERSIZE ON OD											
P	F		5307-515-8775	2134H155 <66640>	.STUD,RECESSED AND STEPPED...	12	EA		AR	*	*	*		*	207	14
					0.003 IN.OVERSIZE ON OD											
P	F		5307-207-6240	2134S155 <66640>	.STUD,RECESSED AND STEPPED...	12	EA		AR	*	*	*		*	207	
					0.007 IN.OVERSIZE ON OD											
P	F		5307-207-6239	2134J155 <66640>	.STUD,RECESSED AND STEPPED...	12	EA		AR	*	*	*		*	207	
					0.012 IN.OVERSIZE ON OD											
P	O		2810-719-4422	148021 <66640>	.GASKET.....	12	EA		1	2	2	3		*	207	15
P	O		2810-719-4420	148018 <66640>	GASKET.....	12	EA		1	2	2	3		*	207	16
P	O		2810-719-4421	148019 <66640>	GASKET.....	12	EA		1	*	2	2		*	207	17
P	F		2810-217-3708	171796 <66640>	SHAFT-SCAVENGE PUMP DRIVE....	12	EA		1	*	*	*		*	207	18
P	O	R	2810-217-3189	430034 <66640>	PUMP ASSEMBLY,COMPLETE.....	12	EA		1	*	*	*		*	207	
					ATTACHING PARTS											
			5310-660-3381	MS21083N5 <96906>	NUT,SELF-LOCKING,HEXAGON.....	12	EA		3	*	*	*		*	207	19
			5310-194-0636	MS9320-11 <96906>	WASHER,FLAT.....	12	EA		3	*	*	*		*	207	20
					---*---											
AD	D			430037 <66640>	.HOUSING ASSEMBLY,SCAVENGE...	12	EA		1						207	
					PUMP GEAR											
					ATTACHING PARTS											
			5310-194-0637	MS9320-10 <96906>	.WASHER,FLAT.....	12	EA		3					*	207	21
			5306-282-6537	AN107446 <88044>	.BOLT,MACHINE.....	12	EA		3					*	207	22
					---*---											

(1) SOURCE, MAINT AND REC CODE (a) SOURCE CODE	(b) MAINT LEVEL	(c) REC CODE	(2) FEDERAL STOCK NUMBER	REFERENCE NUMBER	(3) DESCRIPTION	MODELS USABLE ON CH-34C	(4) UNIT OF ISSUE	(5) QTY INC IN UNIT PACK	(6) QTY INC IN UNIT	(7) 30-DAY DS/GS MAINT ALW (a) 1-20	(b) 21-50	(c) 51-100	(8) 1-YR ALW PER 100 EQUIP CNTGCY	(9) DEPOT MAINT ALW PER 100 EQUIP	(10) ILLUSTRATION (a) FIG NO	(b) ITEM NO
P	D		2810-512-9676	129457	<66640> ..DOWEL,OIL PUMP HOUSING.....	12	EA		6					*	207	23
P	D		2810-210-5457	429039	<66640> ..HOUSING AND PIN ASSEMBLY...	12	EA		1					*	207	
X1				170244	<66640> ...HOUSING-OIL PUMP DRIVE....	12	EA		1						207	24
			5315-241-2921	AN122693	<88044> ...PIN,STRAIGHT,HEADLESS.....	12	EA		1					*	207	25
P	D		5315-148-8950	13H35	<66640> ...PIN,STRAIGHT,HEADLESS..... 0.002 IN.OVERSIZE ON OD	12	EA		AR					*	207	
P	D		5315-148-0795	13S35	<66640> ...PIN,STRAIGHT,HEADLESS..... 0.010 IN.OVERSIZE ON OD	12	EA		AR					*	207	
P	D		5315-282-6867	13J35	<66640> ...PIN,STRAIGHT,HEADLESS..... 0.015 IN.OVERSIZE ON OD	12	EA		AR					*	207	
P	D		2810-992-4601	429055	<66640> ..PLATE ASSEMBLY.....	12	EA		1					*	207	
X1				138919	<66640> ...BEARING,SLEEVE.....	12	EA		1						207	26
X1				170216	<66640> ...PLATE-GEAR HOUSING END....	12	EA		1						207	27
P	D		2810-215-9679	430035	<66640> ..COVER ASSEMBLY.....	12	EA		1					*	207	28
P	F		5340-595-0636	5042H2	<66640> ...INSERT,SCREW THREAD.....	12	EA		AR	*	*	*		*	207	
P	F		5340-595-0637	5042S2	<66640> ...INSERT,SCREW THREAD.....	12	EA		AR	*	*	*		*	207	
P	F		5340-386-4441	5042J2	<66640> ...INSERT,SCREW THREAD.....	12	EA		AR	*	*	*		*	207	
X1				171719	<66640> ...COVER-GEAR HOUSING.....	12	EA		1						207	
			4730-516-2905	2132D2	<66640> ...PLUG,PIPE..... RPL-BY 4730-176-5492	12									207	
P	H		4730-176-5492	JH11-10	<31435> ...PLUG,PIPE RPLS--..... 4730-516-2905	12	EA		1	*	*	*		*	207	29
P	D		2810-217-3716	428282	<66640> ..HOUSING ASSEMBLY.....	12	EA		1					*	207	
P	D		2810-217-3672	138898	<66640> ...SHAFT,SCAVENGE PUMP.....	12	EA		1					*	207	30
X1				138916N1	<66640> ...HOUSING-SCAVENGE PUMP GEAR	12	EA		1						207	31
P	D		2810-512-9773	134733	<66640> .GEAR,OIL.....	12	EA		1					*	207	32
			5330-250-1223	AN123893	<88044> .PACKING,PREFORMED.....	12	EA		1					*	207	33
			5330-240-1954	AN123896	<88044> .PACKING,PREFORMED.....	12	EA		1					*	207	34
P	D		2810-320-2113	138893	<66640> .GEAR,SPUR.....	12	EA		1					*	207	35
P	D		2810-320-2114	138894	<66640> .GEAR,PUMP ASSEMBLY.....	12	EA		1					*	207	36
P	D		2810-320-2115	138895	<66640> .GEAR,PUMP ASSEMBLY.....	12	EA		1					*	207	37
			5330-291-3282	AN123867	<88044> PACKING,PREFORMED.....	12	EA		1					*	207	38
			5330-298-0434	4036D14	<66640> PACKING,PREFORMED..... RPL-BY 5330-803-2648	12									207	
P	O		5330-803-2648	2083D256	<66640> PACKING,PREFORMED..... RPLS-- 5330-298-0434	12	EA		1	*	*	*		*	207	39
P	O		2810-340-7802	136263	<66640> DOWEL,HOLLOW.....	12	EA		2	*	*	*		*	207	40
			5330-298-0438	4036D7	<66640> PACKING,PREFORMED..... RPL-BY 5330-729-5041	12									207	
P	O		5330-729-5041	2083D250	<66640> PACKING,PREFORMED.....	12	EA		4	*	*	2		*	207	41
P	O		2810-569-2856	429286	<66640> STRAINER ASSEMBLY.....	12	EA		1	*	2	2		*	207	42
X1				114858	<66640> .SLEEVE.....	12	EA		1						207	
X1				138931	<66640> .NUT.....	12	EA		1						207	
X1				170588	<66640> .STRAINER.....	12	EA		1						207	
P	O		2810-579-7840	23D63	<66640> GASKET-FRONT OIL SUMP.....	12	EA		1	2	4	7		*	207	43
P	O		4730-768-4703	CD48A	<36540> DETECTOR,MAGNETIC CHIP.....	12	EA		1	*	*	*	REF	*	207	44
P	O		2810-579-7841	23D55	<66640> GASKET.....	12	EA		1	REF	REF	REF		*	207	45
				5000-5	<79136> RING,RETAINING..... RPL-BY 5340-336-0719	12									207	
P	F		5340-336-0719	5000-56	<79136> RING,RETAINER.....	12	EA		1	*	*	*		*	207	46
P	D		2810-306-5877	134342	<66640> SEAT,SPRING,POPPET VALVE.....	12	EA		1					*	207	47
P	D		2810-253-7569	134341	<66640> SPRING,HELICAL,COMPRESSION...	12	EA		1					*	207	48

(1) SOURCE, MAINT AND REC CODE (a) SOURCE CODE	(b) MAINT CODE	(c) REC CODE	(2) FEDERAL STOCK NUMBER	(3) DESCRIPTION REFERENCE NUMBER			MODELS USABLE ON CH-34C	(4) UNIT OF ISSUE	(5) QTY INC IN UNIT PACK	(6) QTY NC IN UNIT	(7) 30-DAY DS GS MAINT ALW (a) 1-20	(b) 21-50	(c) 51-100	(8) 1-YR ALW PER 100 EQUIP CNTGCY	(9) DEPOT MAINT ALW PER 100 EQUIP	(10) ILLUSTRATION (a) FIG NO	(b) ITEM NO
P	D		2810-478-9767	134340	<66640>	VALVE,OIL PUMP CHECK.....	12	EA		1					*	207	49
P	D		2810-118-4482	134339	<66640>	BODY-ROCKER BOX SCAVENGE..... PUMP CHECK VALVE	12	EA		1					*	207	50
P	D		5330-722-1734	2083D253	<66640>	PACKING,PREFORMED.....	12	EA		1					*	207	51
X2	D			138543	<66640>	PLATE,NAME.....	12	EA		1						207	
						REAR OIL PUMP..... SEE FIG. 183A FOR NHA	12			1						208	
P	D		2810-512-9632	126644	<66640>	COVER,OIL..... ATTACHING PARTS	12	EA		2	*	*	*		*	208	1
			5310-660-3381	MS21083N5	<96906>	NUT,SELF-LOCKING,HEXAGON.....	12	EA		6	*	*	*		*	208	2
			5310-194-0636	MS9320-11	<96906>	WASHER,FLAT..... ---*---	12	EA		6	*	*	*		*	208	3
P	D		2810-290-8872	66779	<66640>	GASKET.....	12	EA		2	5	11	23		*	208	4
P	D		2810-512-9920	426736	<66640>	ADAPTER,BUSHING ASSEMBLY.....	12	EA		1					*	208	
P	D		4730-203-0373	5042H3	<66640>	.ADAPTER BUSHING-..... 0.003 IN.OVERSIZE ON OD	12	EA		AR					*	208	5
P	D		2810-479-1105	5042S3	<66640>	.BUSHING-OPEN SCREW,0.007.... IN.OVERSIZE ON OD	12	EA		AR					*	208	
P	D		2810-386-4442	5042J3	<66640>	.BUSHING,OIL SUMP TO..... SUPERCHARGER-0.012 IN. OVERSIZE ON OD	12	EA		AR					*	208	
X1				136085N1	<66640>	.ADAPTER.....	12	EA		1						208	6
		R	2810-884-5808	432291	<66640>	PUMP ASSEMBLY,OIL RPL-BY.... 2810-850-4461	12									208	
P	D	R	2810-850-4461	434004	<66640>	PUMP ASSEMBLY,OIL RPLS--.... 2810-884-5808 ATTACHING PARTS	12	EA		1	*	*	*		*	208	
P	D		5310-168-5086	124D83	<66640>	NUT,SLEEVE.....	12	EA		1	*	*	*		*	208	7
			5310-167-0822	AN960-716	<88044>	WASHER,FLAT.....	12	HD		1	*	*	*		*	208	8
			5310-660-3381	MS21083N5	<96906>	NUT,SELF-LOCKING,HEXAGON.....	12	EA		8	*	*	*		*	208	9
			5310-194-0636	MS9320-11	<96906>	WASHER,FLAT..... ---*---	12	EA		8	*	*	*		*	208	10
			2810-306-5897	28922	<66640>	.COVER,VACUUM PUMP..... RPL-BY 2810-479-0421	12									208	
P	F		2810-479-0421	28922N3	<66640>	.COVER,VACUUM PUMP RPLS--... 2810-306-5897 ATTACHING PARTS	12	EA		2	*	*	*		*	208	11
			5310-903-8282	MS21083N4	<96906>	.NUT,SELF-LOCKING,HEXAGON....	12	EA		8	*	*	*		*	208	12
			5310-194-0637	MS9320-10	<96906>	.WASHER,FLAT..... ---*---	12	EA		8	*	*	*		*	208	13
			5330-023-7623	MS9134-01	<96906>	.GASKET.....	12	EA		2	*	*	*		*	208	14
			5330-640-9634	26072	<66640>	.SEAL,PLAIN ENCASED RPL-BY.. 5330-576-4669	12									208	
P	D		5330-576-4669	33S44375-940	<94135>	.SEAL,PLAIN ENCASED RPLS--.. 5330-640-9634	12	EA		AR	*	*	*		*	208	15
P	D		4730-278-5303	93D18	<66640>	.PLUG,MACHINE THREAD.....	12	EA		3	*	*	*		*	208	16

(1) SOURCE, MAINT AND REC CODE (a) SOURCE CODE	(b) MAINT LEVEL	(c) REC CODE	(2) FEDERAL STOCK NUMBER	REFERENCE NUMBER		(3) DESCRIPTION	MODELS USABLE ON CH-34C	(4) UNIT OF ISSUE	(5) QTY INC IN UNIT PACK	(6) QTY INC IN UNIT	(7) 30-DAY DS/GS MAINT ALW (a) 1-20	(b) 21-50	(c) 51-100	(8) 1-YR ALW PER 100 EQUIP CNTGCY	(9) DEPOT MAINT ALW PER 100 EQUIP	(10) ILLUSTRATION (a) FIG NO	(b) ITEM NO
			5330-815-9489	MS35769-11	<96906>	.GASKET.....	12	EA		3	REF	REF	REF	REF	*	208	17
P	O		5330-803-2652	2083D240	<66640>	.PACKING,PREFORMED.....	12	EA		3	REF	REF	REF		*	208	18
P	O		2810-306-6128	65852	<66640>	.CAP,VALVE,ENGINE.....	12	EA		1	*	*	*		*	208	19
P	O		5310-479-1252	65858	<66640>	.WASHER,RECESSED.....	12	EA		2	*	2	2		*	208	20
P	O		5305-119-9643	126285	<66640>	.SCREW.....	12	EA		1	*	*	*		*	208	21
P	O		2810-479-1251	65855	<66640>	.NUT,OIL PRESSURE RELIEF..... VALVE	12	EA		1	*	*	*		*	208	22
P	O		2810-346-4232	110567	<66640>	.SPRING,HELICAL,COMPRESSION..	12	EA		1	*	*	*		*	208	23
P	O		2810-478-9360	126280	<66640>	.VALVE,OIL PRESSURE RELIEF...	12	EA		1	*	*	*		*	208	24
P	O		2810-306-6129	65857	<66640>	.BODY,VALVE PUMP.....	12	EA		1	*	*	*		*	208	25
P	O		2810-306-6139	66451	<66640>	.CAP,VALVE PUMP,OIL.....	12	EA		1	*	*	*		*	208	26
			5330-199-5886	MS35769-35	<96906>	.GASKET.....	12	LL		1	2	3	5		*	208	27
			2810-663-2147	170537	<66640>	.SPRING,HELICAL,COMPRESSION.. OBS-BY 2810-732-9269	12									208	28
			2810-479-1291	66450	<66640>	.VALVE,OIL PUMP,CHECK..... OBS-BY 2810-732-9269	12									208	29
			2810-732-9269	114644	<66640>	.PLUG-OIL PUMP CHECK VALVE...	12									208	
P	O		4730-968-4719	148966	<66640>	.PLUG RPLS-- 2810-732-9269..	12	EA		1	*	*	*		*	208	
P	D		2810-333-4348	426998	<66640>	.COVER AND STUDDING ASSEMBLY. ATTACHING PARTS	12	EA		1					*	208	
			5310-903-8282	MS21083N4	<96906>	.NUT,SELF-LOCKING,HEXAGON....	12	EA		2					*	208	31
			5310-194-0637	MS9320-10	<96906>	.WASHER,FLAT.....	12	EA		2					*	208	32
						---*---											
P	F		5307-149-4520	2143H80	<66640>	..STUD,STEPPED-0.003 IN..... OVERSIZE ON OD	12	EA		AR	*	*	*		*	208	33
P	F		5307-149-5659	2143S80	<66640>	..STUD,STEPPED-0.007 IN..... OVERSIZE ON OD	12	EA		AR	*	*	*		*	208	
P	F		5307-334-9621	2143J80	<66640>	..STUD,STEPPED-0.012 IN..... OVERSIZE ON OD	12	EA		AR	*	*	*		*	208	
X1				426997	<66640>	..COVER AND BUSHING ASSEMBLY.	12	EA		1						208	
			5315-241-2921	AN122693	<88044>	...PIN,STRAIGHT,HEADLESS.....	12	EA		2					*	208	34
P	D		5315-148-8950	13H35	<66640>	...PIN-0.002 IN.OVERSIZE ON.. OD	12	EA		AR					*	208	
P	D		5315-148-0795	13S35	<66640>	...PIN,STRAIGHT,HEADLESS..... 0.010 IN.OVERSIZE ON OD	12	EA		AR					*	208	
P	D		5315-282-6867	13J35	<66640>	...PIN,STRAIGHT,HEADLESS..... 0.015 IN.OVERSIZE ON OD	12	EA		AR					*	208	
P	D		2810-478-9877	136659	<66640>	...BEARING,SLEEVE.....	12	EA		3					*	208	35
P	D		2810-662-3048	136659Y1	<66640>	...BEARING,SLEEVE-0.005 IN... OVERSIZE ON OD	12	EA		AR					*	208	
			2810-662-2492	136659Y3	<66640>	...BEARING,SLEEVE-0.015 IN... OVERSIZE ON OD USE UNTIL EXHAUSTED,NO REPLACEMENT	12	EA		AR						208	
P	D		2810-555-6236	136659Y4	<66640>	...BEARING,SLEEVE.....	12	EA		AR					*	208	
X1				136576N1	<66640>	...COVER-TACHOMETER.....	12	EA		1						208	36
P	D		2810-333-4349	427000	<66640>	.HOUSING AND STUDDING..... ASSEMBLY ATTACHING PARTS	12	EA		1					*	208	
			5310-903-8282	MS21083N4	<96906>	.NUT,SELF-LOCKING,HEXAGON....	12	EA		7					*	208	37
			5310-194-0637	MS9320-10	<96906>	.WASHER,FLAT.....	12	EA		7					*	208	38
						---*---											

(1) SOURCE, MAINT AND REC CODE (a) SOURCE CODE	(b) MAINT LEVEL	(c) REC CODE	(2) FEDERAL STOCK NUMBER	REFERENCE NUMBER	(3) DESCRIPTION	MODELS USABLE ON CH-34C	(4) UNIT OF ISSUE	(5) QTY INC IN UNIT PACK	(6) QTY INC IN UNIT	(7) 30-DAY DS GS MAINT ALW (a) 1-20	(b) 21-50	(c) 51-100	(8) 1-YR ALW PER 100 EQUIP CNTGCY	(9) DEPOT MAINT ALW PER 100 EQUIP	(10) ILLUSTRATION (a) FIG NO	(b) ITEM NO
P	F		5307-149-5257	2143H135 <66640>	..STUD,STEPPED-0.003 IN..... OVERSIZE ON OD	12	EA		AR	*	*	*		*	208	39
P	F		5307-149-5256	2143S135 <66640>	..STUD-0.007 IN.OVERSIZE..... ON OD	12	EA		AR	*	*	*		*	208	
P	F		5307-208-0630	2143J135 <66640>	..STUD,STEPPED-0.012 IN..... OVERSIZE ON OD	12	EA		AR	*	*	*		*	208	
P	F		5307-149-5255	2143H165 <66640>	..STUD,RECESSED AND STEPPED.. 0.003 IN.OVERSIZE ON OD	12	EA		AR	*	*	*		*	208	40
P	F		5307-149-5254	2143S165 <66640>	..STUD,RECESSED-0.007 IN..... OVERSIZE ON OD	12	EA		AR	*	*	*		*	208	
P	F		5307-216-3041	2143J165 <66640>	..STUD,RECESSED-0.012 IN..... OVERSIZE ON OD	12	EA		AR	*	*	*		*	208	
X1				426999 <66640>	..HOUSING AND BUSHING..... ASSEMBLY	12	EA		1						208	
P	D		2810-478-9877	136659 <66640>	...BEARING,SLEEVE.....	12	EA		3					*	208	41
P	D		2810-662-3048	136659Y1 <66640>	...BEARING,SLEEVE-0.005 IN... OVERSIZE ON OD	12	EA		AR					*	208	
			2810-662-2492	136659Y3 <66640>	...BEARING,SLEEVE-0.015 IN... OVERSIZE ON OD USE UNTIL EXHAUSTED,NO REPLACEMENT	12	EA		AR						208	
P	D		2810-555-6236	136659Y4 <66640>	...BEARING,SLEEVE-0.020 IN... OVERSIZE ON OD	12	EA		AR					*	208	
P	D		2810-306-5774	115946 <66640>	...BUTTON,THRUST.....	12	EA		1					*	208	42
X1				427004 <66640>	...HOUSING MACHINING ASSEMBLY	12	EA		1						208	
P	D		5315-515-2950	2094H156 <66640>	....PIN,STRAIGHT,HEADLESS....	12	EA		1					*	208	43
X1				136585N1 <66640>	....HOUSING-TACHOMETER DRIVE.	12	EA		1						208	44
P	D		2810-310-8852	136574 <66640>	.GASKET,TACHOMETER DRIVE..... SHAFT GEAR,HOUSING COVER	12	EA		1					*	208	45
P	D		2810-479-1029	426995 <66640>	.GEAR ASSEMBLY,TACHOMETER.... DRIVE SHAFT	12	EA		1					*	208	
P	D		2810-479-1030	426996 <66640>	.GEAR ASSEMBLY,TACHOMETER.... DRIVE SHAFT	12	EA		1					*	208	
X1				1122 <79570>	..PLUG..... RPLS-- 5340-479-0082	12	EA		2						208	46
X1				136572 <66640>	..GEAR-TACHOMETER DRIVE SHAFT	12	EA		1						208	47
X1				136573 <66640>	..GEAR-TACHOMETER DRIVE SHAFT	12	EA		1						208	48
P	D		2810-478-9869	136578 <66640>	.GEAR,TACHOMETER DRIVE..... SHAFT,INTERMEDIATE	12	EA		1					*	208	49
P	D		2810-310-8851	136571 <66640>	.GASKET.....	12	EA		1					*	208	50
P	D		2810-118-3571	413331 <66640>	.GEAR ASSEMBLY.....	12	EA		1					*	208	
P	D		5315-619-3594	87D13 <66640>	..PIN,STRAIGHT,HEADLESS..... SEAL	12	EA		1					*	208	51
P	D		2810-306-5773	115896 <66640>	..RETAINER,OIL SEAL SPRING...	12	EA		1					*	208	52
P	D		2810-293-5537	110429 <66640>	..BEARING,SLEEVE-TACHOMETER.. DRIVE SHAFT GEAR	12	EA		1					*	208	53
P	D		2810-227-5715	112989 <66640>	..SPRING,HELICAL,COMPRESSION.	12	EA		1					*	208	54
X1				110428 <66640>	..GEAR-TACHOMETER DRIVE SHAFT	12	EA		1						208	55
P	D		2810-149-7014	110433 <66640>	.RETAINER,OIL RING SEAL.....	12	EA		1					*	208	56
P	D		5330-722-0101	2083D251 <66640>	..PACKING,PREFORMED.....	12	EA		1					*	208	57
			2810-341-4849	430541 <66640>	.PUMP,MACHINING AND STUDDING. RPL-BY 2810-850-4442	12									208	

(1) SOURCE, MAINT AND REC CODE (a) SOURCE CODE	(b) MAINT LEVEL	(c) REC CODE	(2) FEDERAL STOCK NUMBER	REFERENCE NUMBER	(3) DESCRIPTION	MODELS USABLE ON CH-34C	(4) UNIT OF ISSUE	(5) QTY INC IN UNIT PACK	(6) QTY INC IN UNIT	(7) 30-DAY DS/GS MAINT ALW (a) 1-20	(b) 21-50	(c) 51-100	(8) 1-YR ALW PER 100 EQUIP CNTGCY	(9) DEPOT MAINT ALW PER 100 EQUIP	(10) ILLUSTRATION (a) FIG NO	(b) ITEM NO
P	D		2810-341-4849	434003	<66640> .PUMP,MACHINING AND STUDDING. RPLS--2810-341-4849	12	EA		1					*	208	
P	F		5307-033-0386	2029S17	<66640> ..STUD,PLAIN.....		EA		AR	*	2	2		*	208	
P	F		4730-147-6194	64280	<66640> ..ADAPTER,BUSHING.....	12	EA		3	*	*	*		*	208	58
P	F		5307-632-9247	2029D17	<66640> ..STUD,PLAIN.....	12	EA		3	*	*	*		*	208	59
			5307-515-6690	2029H17	<66640> ..STUD,PLAIN-0.003 IN..... OVERSIZE ON OD RPL-BY 5307-705-9754	12									208	
P	F		5307-705-9754	360242S7S8C	<23040> ..STUD,PLAIN-0.004 IN..... OVERSIZE ON OD RPLS-- 5307-515-6690	12	EA		AR	*	*	*		*	208	
P	F		5307-033-0386	2029S17	<66640> ..STUD,PLAIN-0.007 IN..... OVERSIZE ON OD	12	EA		AR	*	REF	REF		*	208	
P	F		5307-637-0872	2029J17	<66640> ..STUD,PLAIN-0.012 IN..... OVERSIZE ON OD	12	EA		AR	*	*	*		*	208	
P	F		5307-637-0870	2029H71	<66640> ..STUD,PLAIN-0.003 IN..... OVERSIZE ON OD	12	EA		AR	*	*	*		*	208	60
P	F		5307-637-0871	2029S71	<66640> ..STUD,PLAIN-0.007 IN..... OVERSIZE ON OD	12	EA		AR	*	*	*		*	208	
P	F		5307-208-5737	2029J71	<66640> ..STUD,PLAIN-0.012 IN..... OVERSIZE ON OD	12	EA		AR	*	*	*		*	208	
			5315-663-2598	AN150232	<88044> ..PIN,STRAIGHT-HEADLESS.....	12	EA		1					*	208	
P	D		2810-310-9078	66185	<66640> ..DOWEL,OIL PUMP.....	12	EA		4					*	208	61
			2810-860-0602	147977	<66640> ..BODY,OIL PUMP-CHECK VALVE.. RPL-BY 2810-512-9973	12	EA								208	
P	D		2810-512-9973	66449	<66640> ..BODY,OIL PUMP CHECK VALVE.. RPLS-- 2810-860-0602	12	EA		1					*	208	62
X1				127747N1	<66640> ..PLATE-OIL PUMP END.....	12	EA		1						208	63
P	D		2810-306-5863	130568	<66640> ..SHAFT,IMPELLER.....	12	EA		1					*	208	64
				147978	<66640> ..BODY,OIL PUMP..... RPL-BY PN 136579N1	12									208	
X1				136579N1	<66640> ..BODY,OIL PUMP..... RPLS-- PN 147978	12	EA		1						208	65
X1				426994	<66640> ..COVER ASSEMBLY.....	12	EA		1						208	
P	F		5307-149-4520	2143H80	<66640> ...STUD,STEPPED-0.003 IN..... OVERSIZE ON OD	12	EA		AR	*	*	*		*	208	66
P	F		5307-149-5659	2143S80	<66640> ...STUD,STEPPED-0.007 IN..... OVERSIZE ON OD	12	EA		AR	*	*	*		*	208	
P	F		5307-334-9621	2143J80	<66640> ...STUD,STEPPED-0.012 IN..... OVERSIZE ON OD	12	EA		AR	*	*	*		*	208	
			5315-241-2921	AN122693	<88044> ...PIN,STRAIGHT,HEADLESS..... COVER TO GEAR HOUSING	12	EA		2					*	208	67
P	D		5315-148-8950	13H35	<66640> ...PIN-0.002 IN.OVERSIZE ON.. OD	12	EA		AR					*	208	
P	D		5315-148-0795	13S35	<66640> ...PIN,STRAIGHT,HEADLESS..... 0.010 IN.OVERSIZE ON OD	12	EA		AR					*	208	
P	D		5315-282-6867	13J35	<66640> ...PIN,STRAIGHT,HEADLESS..... 0.015 IN.OVERSIZE ON OD	12	EA		AR					*	208	
X1				136570N1	<66640> ...COVER-OIL PUMP.....	12	EA		1						208	68
P	D		2810-478-9870	136580	<66640> .GASKET-OIL PUMP BODY.....	12	EA		1					*	208	69
P	D		2810-306-5861	130388	<66640> .IMPELLER,SHAFT GEAR.....	12	EA		1					*	208	70
P	D		2810-306-5862	130389	<66640> .IMPELLER,SHAFT GEAR.....	12	EA		1					*	208	71

(1) SOURCE, MAINT AND REC CODE (a) SOURCE CODE	(b) MAINT LEVEL	(c) REC LEVEL CODE	(2) FEDERAL STOCK NUMBER	REFERENCE NUMBER		(3) DESCRIPTION	MODELS USABLE ON CH-34C	(4) UNIT OF ISSUE	(5) QTY INC IN UNIT PACK	(6) QTY INC IN UNIT	(7) 30-DAY DS/GS MAINT ALW (a) 1-20	(b) 21-50	(c) 51-100	(8) 1-YR ALW PER 100 EQUIP CNTGCY	(9) DEPOT MAINT ALW PER 100 EQUIP	(10) ILLUSTRATION (a) FIG NO	(b) ITEM NO
			4730-196-9580	AN816-6D	<88044>	.ADAPTER,STRAIGHT PIPE.....	12	EA		1	*	*	*		*	208	72
			4730-585-8769	AN929A6	<88044>	.CAP,TUBE.....	12	EA		1	*	*	*		*	208	
P	D		2810-306-5860	130387	<66640>	.IMPELLER,GEAR.....	12	EA		1					*	208	73
P	D		2810-640-2641	138873	<66640>	.COUPLING,SHAFT,FLEXIBLE.....	12	EA		1					*	208	74
						ATTACHING PARTS											
			5315-234-1864	MS24665-302	<96906>	.PIN,COTTER.....	12	HD		1					*	208	75
P	D		5310-512-9622	124D118	<66640>	.NUT,CASTELLATED,HEXAGON.....	12	EA		1					*	208	76
			5310-184-8974	MS9320-12	<96906>	.WASHER,FLAT.....	12	EA		1					*	208	77
						---*---											
P	D		2810-320-2112	138879	<66640>	.GEAR,PUMP ASSEMBLY.....	12	EA		1					*	208	78
P	D		2810-479-1161	61990	<66640>	.GASKET,OIL PUMP BODY.....	12	EA		1					*	208	79
P	D		2810-310-8834	127746	<66640>	GASKET.....	12	EA		1					*	208	80
			2810-310-8834	SAC251	<13033>	ADDED PART NO.FOR ABOVE ITEM.	12				*	*	REF			208	80
P	F		2810-512-9927	429208	<66640>	TUBE ASSEMBLY,SUMP EXTERNAL..	12	EA		1	*	*	*		*	209	1
						SEE FIG.183A FOR NHA											
						ATTACHING PARTS											
			5306-180-3374	AN103012	<88044>	BOLT,MACHINE.....	12	EA		3	*	*	*		*	209	2
			5310-194-0636	MS9320-11	<96906>	WASHER,FLAT.....	12	EA		3	*	*	*		*	209	3
						---*---											
X1				138003	<66640>	.ELBOW-OIL SUMP.....	12	EA		1						209	
X1				170493	<66640>	.FERRULE-EXTERNAL OIL TUBE...	12	EA		1						209	
						WHEN EXHTD RQTN NHA											
						2810-512-9927											
X1				170623	<66640>	.TUBE-EXTERNAL OIL.....	12	EA		1						209	
P	F		2810-118-2379	136308	<66640>	GASKET.....	12	EA		1	2	2	4		13	209	4
P	F		4730-516-3001	130D100	<66640>	FLANGE,PIPE.....	12	EA		1	*	*	*		*	209	5
						ATTACHING PARTS											
			5306-180-3374	AN103012	<88044>	BOLT,MACHINE.....	12	EA		2	*	*	*		*	209	6
			5310-194-0636	MS9320-11	<96906>	WASHER,FLAT.....	12	EA		2	*	*	*		*	209	7
						---*---											
			5330-290-9383	AN123876	<88044>	PACKING,PREFORMED.....	12	EA		1	*	*	*		*	209	8
						ROCKER BOX DRAIN SYSTEM.....	12			1						210	
						SEE FIG.183A FOR NHA											
P	O		2810-217-3673	138941	<66640>	TUBE,ROCKER BOX OIL DRAIN....	12	EA		6	2	2	3		*	210	1
P	O		4730-329-7098	138383	<66640>	INVERTED NUT,TUBE COUPLING...	12	EA		12	2	3	5		*	210	2
P	O		2810-478-9850	136358	<66640>	BEARING,SLEEVE.....	12	EA		12	4	11	22		*	210	3
P	O		5310-595-9962	27D331	<66640>	WASHER-SPRING TENSION.....	12	XX		24	*	*	*		*	210	4
P	O		2810-599-6332	139165	<66640>	PACKING,PREFORMED.....	12	EA		12	10	26	52		*	210	5
P	O		2810-629-4571	B90060A2	<01881>	TUBE ASSEMBLY,SUMP TO FRONT..	12	EA		1	*	*	*		*	210	6
						PUMP SCAVENGE											

(1) SOURCE, MAINT AND REC CODE (a) SOURCE CODE	(b) MAINT LEVEL	(c) REC CODE	(2) FEDERAL STOCK NUMBER	REFERENCE NUMBER		(3) DESCRIPTION	MODELS USABLE ON CH-34C	(4) UNIT OF ISSUE	(5) QTY INC IN UNIT PACK	(6) QTY INC IN UNIT	(7) 30-DAY DS/GS MAINT ALW (a) 1-20	(b) 21-50	(c) 51-100	(8) 1-YR ALWPER 100 EQUIP CNTGCY	(9) DEPOT MAINT ALWPER 100 EQUIP	(10) ILLUSTRATION (a) FIG NO	(b) ITEM NO
			5306-281-9545	AN107408	<88044>	BOLT,MACHINE.....	12	EA		2	*	*	*		*	210	7
P	O		2810-540-4976	171801	<66640>	WASHER,THRUST.....	12	EA		2	*	*	2		*	210	8
			5306-281-9545	AN107408	<88044>	BOLT,MACHINE.....	12	EA		2	*	*	*		*	210	9
			5310-194-0637	MS9320-10	<96906>	WASHER,FLAT.....	12	EA		2	*	*	*		*	210	10
P	O		5330-576-4081	20830234	<66640>	PACKING,PREFORMED.....	12	EA		2	2	2	4		*	210	11
P	O		2810-641-7152	171766	<66640>	GASKET-ROCKER BOX SUMP TUBE..	12	EA		2	3	7	15		*	210	12
			2810-641-7152	T29-012	<12849>	ADDED PART NO.FOR ABOVE ITEM.	12				REF	REF	REF			210	12
P	O		2810-215-9688	430054	<66640>	TUBE ASSEMBLY-ROCKER BOX..... SUMP VENT	12	EA		1	*	2	2		*	210	13
X1				136361	<66640>	.BEARING,SLEEVE.....	12	EA		2						210	14
X1				136363	<66640>	.NUT,VENT TUBE.....	12	EA		2						210	15
X1				171714	<66640>	.TUBE-ROCKER BOX SUMP VENT...	12	EA		1						210	16
P	O		2810-478-9853	136364	<66640>	BEARING,SLEEVE.....	12	EA		2	*	2	2		*	210	17
P	O		5310-281-5383	27D330	<66640>	WASHER,SPRING TENSION.....	12	EA		4	10	25	49		*	210	18
P	O		2810-298-0551	139166	<66640>	PACKING,PREFORMED.....	12	EA		2	5	14	27		*	210	19
P	O		2810-098-2642	90315A	<66640>	TUBE,ROCKER BOX SUMP.....	12	EA		1	*	2	2		*	210	20
P	O		2810-521-0734	430997	<66640>	TUBE ASSEMBLY-ROCKER BOX..... DRAIN,CYLINDER NO.3	12	EA		1	*	*	*		*	210	21
P	O		2810-505-8636	430996	<66640>	TUBE ASSEMBLY,OIL DRAIN-..... CYLINDER NO.1	12	EA		1	*	2	2		*	210	22
P	O		2810-505-8637	430998	<66640>	TUBE ASSEMBLY-ROCKER BOX..... OIL-CYLINDER NO.8	12	EA		1	*	*	*		*	210	23
X1				145772	<66640>	.TUBE-ROCKER BOX DRAIN,..... CYLINDER NO.3	12	EA		1						210	
X1				145769	<66640>	.TUBE-ROCKER BOX DRAIN.....	12	EA		1						210	
X1				145770	<66640>	.TUBE-ROCKER BOX DRAIN.....	12	EA		1						210	
X1				145773	<66640>	.TUBE-ROCKER BOX DRAIN,..... CYLINDER NO.8	12	EA		1						210	
X1				171738	<66640>	.CONNECTOR-ROCKER BOX DRAIN..	12	EA		1						210	
X1				171712	<66640>	.NUT-ROCKER BOX OIL DRAIN.... TUBE	12	EA		3						210	
X1				171744	<66640>	.COLLAR-ROCKER BOX OIL..... DRAIN TUBE	12	EA		3						210	
P	O		2810-478-9850	136358	<66640>	BEARING,SLEEVE.....	12	EA		5	REF	REF	REF		*	210	24
P	O		5310-595-9962	27D331	<66640>	WASHER,SPRING TENSION.....	12	XX		10	*	*	*		*	210	25
P	O		2810-599-6332	139165	<66640>	PACKING,PREFORMED.....	12	EA		5	REF	REF	REF		*	210	26
P	O		2810-215-9689	430059	<66640>	BRACKET ASSEMBLY,ROCKER BOX.. DRAIN TUBES	12	EA		3	*	*	*		*	210	27
						ATTACHING PARTS											
			5305-271-3550	AN115410	<88044>	SCREW,MACHINE.....	12	HD		3	*	*	*		*	210	28
			5305-290-0651	AN115432	<88044>	SCREW,MACHINE.....	12	EA		3	*	*	*		*	210	29
			5310-167-0805	AN960C716	<88044>	WASHER,FLAT.....	12	HD		6	*	*	*		*	210	30
			5310-877-5797	MS21044N3	<96906>	NUT,SELF-LOCKING,HEXAGON.....	12	EA		6	*	*	*		*	210	31
						---*---											
X1				171708	<66640>	.BRACKET-ROCKER BOX DRAIN.... TUBE	12	EA		1						210	32
X1				171764	<66640>	.SPACER-DRAIN TUBE BRACKET...	12	EA		1						210	33
			5340-533-3654	EAB700-17	<81996>	CLAMP,SUPPORT.....	12	EA		3	*	*	*		*	210	34
P	F		4730-479-0148	2072D33	<66640>	PLUG,HEXAGON HEAD.....	12	EA		2	*	*	*		*	210	35
			5330-250-1217	AN123866	<88044>	PACKING,PREFORMED.....	12	EA		2	*	*	*		*	210	36
P	O		2810-533-5039	430073	<66640>	STRAINER ASSEMBLY,ROCKER..... BOX SUMP	12	EA		1	*	*	2		*	210	37

(1) SOURCE, MAINT AND REC CODE (a) SOURCE CODE	(b) MAINT CATEGORY	(c) REC CODE	(2) FEDERAL STOCK NUMBER	REFERENCE NUMBER		(3) DESCRIPTION	MODELS USABLE ON CH-34C	(4) UNIT OF ISSUE	(5) QTY INC IN UNIT PACK	(6) QTY INC IN UNIT	(7) 30-DAY DS GS MAINT ALW (a) 1-20	(b) 21-50	(c) 51-100	(8) 1-YR ALW PER 100 EQUIP CNTGCY	(9) DEPOT MAINT ALW PER 100 EQUIP	(10) ILLUSTRATION (a) FIG NO	(b) ITEM NO
X1				146553	<66640>	.PLUG-ROCKER BOX SUMP..... STRAINER	12	EA		1						210	
X1				139582	<66640>	.SLEEVE-ROCKER BOX SUMP..... STRAINER	12	EA		1						210	
X1				171798	<66640>	.STRAINER-ROCKER BOX SUMP....	12	EA		1						210	
P	O		2810-579-7838	23D52	<66640>	GASKET-ROCKER BOX DRAIN..... STRAINER	12	EA		1	2	2	4		*	210	38
			2810-859-6034	91918	<66640>	TUBE ASSEMBLY,ROCKER BOX..... RPL-BY 2810-070-6825	12									210	
P	F		2810-070-6825	94480-2	<78570>	HOSE ASSEMBLY,ROCKER BOX..... RPLS-- 2810-217-3734, 2810-859-6034	12	EA		1	2	2	3		*	210	39
X1				91158-8	<66640>	.HOSE ASSEMBLY.....	12	EA		1						210	
			2810-771-7147	136740	<66640>	.CONNECTOR,ROCKER BOX..... RPL-BY PN 91954	12									210	
X1				91954	<66640>	.CONNECTOR,ROCKER BOX..... RPLS-- 2810-771-7147	12	EA		2						210	
P	F		2810-478-9881	136739	<66640>	.NUT,ROCKER LUBRICATING TUBE. CONNECTOR	12	EA		2	*	*	2		*	210	
P	F		5310-281-5382	27D309	<66640>	.WASHER,SPECIAL.....	12	XX		16	*	*	*		*	210	
P	F		2810-326-0817	145360	<66640>	.STUD-ROCKER LUBRICATING..... RPLS-- 5307-345-1510	12	EA		16	*	2	2		*	210	
			2810-987-5108	149035	<66640>	STRAINER ASSEMBLY..... SEE FIG.183A FOR NHA	12	EA		1						211	
P	O		2945-790-3902	149217	<66640>	STRAINER ASSEMBLY..... SEE FIG.183A FOR NHA ATTACHING PARTS	12	EA		1	*	REF	REF	REF	*	211	
			5310-903-8282	MS21083N4	<96906>	NUT,SELF-LOCKING,HEXAGON.....	12	EA		3	*	*	*		*	211	1
			5310-194-0637	MS9320-10	<96906>	WASHER,FLAT..... ---*---	12	EA		3	*	*	*		*	211	2
			2810-885-4054	870016	<66640>	.COVER,OIL STRAINER..... RPL-BY 2810-904-2458	12									211	
P	O		2810-904-2458	870219	<66640>	.STRAINER, COVER OIL..... RPLS-- 2810-885-4054 ATTACHING PARTS	12	EA		1	*	*	2	7	*	211	3
P	O		2945-854-5467	870011	<66640>	.SCREW,COVER PULLER.....	12	EA		1	*	2	2		*	211	4
			5310-209-3631	BA5-16	<94592>	.WASHER..... RPL-BY 5310-322-4642	12									211	
P	O		5310-322-4642	859313	<66640>	.WASHER,OIL STRAINER PULLER.. AND ELEMENT RPLS--5310-209-3631 ---*---	12	EA		1	2	3	6		*	211	5
P	O		5330-803-2652	2083D240	<66640>	.PACKING,PREFORMED.....	12	EA		1	REF	REF	REF		*	211	6
P	O		2945-878-7385	SP1896	<94592>	.WASHER,THRUST.....		EA		1	2	2	4		*	211	7
P	O		2810-785-6886	859865	<66640>	.HOUSING AND PIN ASSEMBLY....	12	EA		1	*	*	*		*	211	8
X1				859864	<66640>	..INDEXING KEY.....		EA		1						211	9

(1) SOURCE, MAINT AND REC CODE (a) SOURCE CODE	(b) MAINT LEVEL	(c) REC CODE	(2) FEDERAL STOCK NUMBER	REFERENCE NUMBER	(3) DESCRIPTION	MODELS USABLE ON CH-34C	(4) UNIT OF ISSUE, MEAS	(5) QTY INC IN UNIT PACK	(6) QTY INC IN UNIT	(7) 30-DAY DS, GS MAINT ALW (a) 1-20	(b) 21-50	(c) 51-100	(8) 1-YR ALW PER 100 EQUIP CNTGCY	(9) DEPOT MAINT ALW PER 100 EQUIP	(10) ILLUSTRATION (a) FIG NO	(b) ITEM NO
AO	O			870100	<66640> .ELEMENT ASSEMBLY.....	12	EA		1						211	11
			5340-628-5595	BA5-15	<66640> ..RING..RPL-BY 2810-536-3670.	12									211	
P	O		2810-536-3670	859331	<66640> ..RING.....	12	EA		1	2	3	7		3	211	12
P	O		2810-590-8855	859640	<66640> ..WASHER,RETAINING.....	12	EA		1	*	*	*		*	211	13
			2810-992-7618	870101	<66640> ..STRAINER ELEMENT..... RPL-BY 2810-995-2483	12	EA								211	
P	O		2810-995-2483	870579	<66640> ..STRAINER ELEMENT,SEDIMENT.. RPLS-- 2810-992-7618	12	EA		47	3	6	13	151	*	211	14
P	O		2810-992-2559	870102	<66640> ..WASHER ASSEMBLY.....	12	EA		1	*	2	2		*	211	15
P	O		2810-536-3671	859332	<66640> ..RING.....	12	EA		1	*	*	2		*	211	16
P	O		2810-049-0285	857467	<66640> ..DISK.....	12	EA		1	*	*	*		*	211	17
P	O		2945-332-5399	859315	<66640> ..SPRING,HELICAL,COMPRESSION.	12	EA		1	2	5	10		*	211	18
P	O		2810-343-9305	859318	<66640> ..BALL.....	12	EA		1	*	*	*		*	211	19
			2810-091-5793	859328	<66640> ..BODY ASSEMBLY..... RPL-BY 2810-724-1300	12									211	
P	O		2810-724-1300	859866	<66640> ..BODY ASSEMBLY RPLS--..... 2810-091-5793	12	EA		1	*	*	2		*	211	20
X1				859863	<66640> ...SUPPORT,OIL STRAINER BODY.		EA		1						211	21
P	O		2810-478-9188	117812	<66640> .GASKET,OIL STRAINER..... U/W 2810-987-5108	12	EA		1	4	11	21		*	211	22
P	O		2945-790-3939	149108	<66640> .GASKET,OIL STRAINER..... U/W 2945-790-3902	12	EA		1	*	*	*		*	211	
P	O		2810-478-9150	116964	<66640> .RING,OIL FILLER PACKING..... RPLS-- 5330-298-0438 RPL-BY 4730-968-4719	12	EA		1	2	2	3		*	211	23

(1) SOURCE, MAINT AND REC CODE (a) SOURCE CODE	(b) MAINT LEVEL	(c) RECOVERY CODE	(2) FEDERAL STOCK NUMBER	REFERENCE NUMBER		(3) DESCRIPTION	MODELS USABLE ON CH-34C	(4) UNIT OF ISSUE	(5) QTY INC IN UNIT PACK	(6) QTY INC IN UNIT	(7) 30-DAY DS GS MAINT ALW (a) 1-20	(b) 21-50	(c) 51-100	(8) 1-YR ALW PER 100 EQUIP CNTGCY	(9) DEPOT MAINT ALW PER 100 EQUIP	(10) ILLUSTRATION (a) FIG NO	(b) ITEM NO
		R	2925-294-2596	10-56900-4	<77820>	MAGNETO,IGNITION SEE FIG.... 183A FOR NHA	12	EA		1						212A	
P	O	R	2925-065-7746	10-94500-2	<77820>	MAGNETO,IGNITION SEE FIG.... 183A FOR NHA	12	EA		1	REF	REF	REF	REF	*	212A	
P	H		2925-370-9686	10-59251	<77820>	.COVER,MAGNETO COIL..... ATTACHING PARTS	12	EA		1	*	*	*		*	212A	
			5310-275-2021	MS20364D428A	<96906>	.NUT,SELF-LOCKING,HEXAGON....	12	EA		2	*	*	*		*	212A	2
P	H		2925-370-9691	10-59278	<77820>	.COUPLING..... ---*---	12	EA		1	*	*	2		*	212A	3
P	H		2925-182-9718	10-37700	<77820>	.VENTILATOR,MAGNETO.....	12	EA		1	*	2	2		*	212A	4
P	H		2925-033-2553	2-782Z	<77820>	.PLATE,IDENTIFICATION..... ATTACHING PARTS	12	EA		1	2	2	4		*	212A	5
P	H		2815-085-7178	10-90500-5	<77820>	.SCREW,DRIVE..... ---*---	12	EA		2	*	*	*		*	212A	6
P	H		5305-208-0312	10-528Z	<77820>	.SCREW,MACHINE.....NOTE 1	12	EA		1	*	*	*		*	212A	7
			5310-045-4007	MS35338-41	<96906>	.WASHER,LOCK.....	12	HD		1	*	*	*		*	212A	8
P	F		5310-262-5908	2-171Z	<77820>	.WASHER,FLAT.....NOTE 1	12	EA		1	*	*	*		*	212A	9
P	H		5305-639-8966	10-91464-5	<77820>	.SCREW,MACHINE.....NOTE 1	12	EA		1	*	*	*		*	212A	10
			5310-045-3299	MS35338-42	<96906>	.WASHER,LOCK.....	12	HD		1	*	*	*		*	212A	11
P	H		5305-067-7792	10-91464-4	<77820>	.SCREW,MACHINE.....	12	EA		1	*	*	*		*	212A	12
P	H		5305-639-2807	10-91675-64	<77820>	.SCREW,MACHINE.....NOTE 2	12	EA		5	*	*	*		*	212A	
P	F		3110-227-4283	10-52595	<77820>	.BEARING,BALL,ANNULAR.....	12	EA		1	*	*	*		*	212A	
			5310-045-3299	MS35338-42	<96906>	.WASHER,LOCK.....	12	HD		1	*	*	*		*	212A	13
P	H		5310-709-8578	10-82454	<77820>	.NUT,PLAIN,ROUND.....NOTE 4	12	EA		1	*	*	*		*	212A	14
P	H		2925-705-3679	10-82456	<77820>	.SPACER,RING.....NOTE 4	12	EA		1	*	*	*		*	212A	15
P	H		2925-991-6997	10-85954	<77820>	.FLANGE ASSEMBLY,MAGNETO..... NOTE 3	12	EA		1	*	*	*		*	212A	
P	H		2925-928-6320	10-176175	<77820>	.HOUSING,MAGNETO.....NOTE 4 ATTACHING PARTS	12	EA		1	*	*	*		*	212A	
P	H		5310-033-2484	10-59299	<77820>	.NUT,SPECIAL.....NOTE 2	12	EA		3	*	*	*		*	212A	16
			5310-514-8948	MS35337-45	<96906>	.WASHER,LOCK.....	12	HD		3	*	*	*		*	212A	17
P	H		5310-090-0411	10-77386	<77820>	.WASHER,FLAT.....NOTE 2 ---*---	12	EA		3	*	*	*		*	212A	18
				10-82459	<77820>	..CONNECTOR RECEPTACLE..... ELECTRICAL USE UNTIL EXHAUSTED,NO REPLACEMENT NOTE 3 ATTACHING PARTS	12	EA		1						212A	19
			5305-264-2220	AN503-8-4	<88044>	..SCREW,MACHINE.....	12	GR		3	*	*	*		*	212A	20
				10-19399	<77820>	..WASHER,LOCK.....NOTE 2 & 3 ---*---	12	EA		3						212A	21
			5935-370-9638	10-40200	<77820>	..CONTACT,ELECTRICAL..... NOTE 2 & 3	12	EA		19						212A	22
				10-37320-14S	<77820>	..CONNECTOR RECEPTACLE,..... ELECTRICAL NOTE 2 & 3 ATTACHING PARTS	12	EA		1						212A	23
P	H		5305-638-3689	10-91644-44	<77820>	..SCREW,MACHINE....NOTE 2 & 3	12	EA		4	*	*	*		*	212A	24
			5310-045-3299	MS35338-42	<96906>	..WASHER,LOCK.....NOTE 3 ---*---	12	HD		4	*	*	*		*	212A	25
				10-40450-22S	<77820>	..GASKET,FLAT,ELECTRICAL..... CONNECTOR NOTE 2 & 3	12	EA		1						212A	26
P	F		5935-755-3688	10-37288-7S	<77820>	..CONNECTOR,RECEPTACLE,.....	12	EA		1	*	*	*		*	212A	27

(1) SOURCE, MAINT AND REC CODE (a) SOURCE CODE	(b) MAINT LEVEL	(c) REC CODE	(2) FEDERAL STOCK NUMBER	REFERENCE NUMBER	(3) DESCRIPTION	MODELS USABLE ON CH-34C	(4) UNIT OF ISSUE	(5) QTY INC IN UNIT PACK	(6) QTY INC IN UNIT	(7) 30-DAY DS/GS MAINT ALW (a) 1-20	(b) 21 50	(c) 51 100	(8) 1-YR ALW PER 100 EQUIP CNTOCY	(9) DEPOT MAINT ALW PER 100 EQUIP	(10) ILLUSTRATION (a) FIG NO	(b) ITEM NO
					CONTINUED										212A	27
					ELECTRICAL NOTE 2 & 3											
					ATTACHING PARTS											
P	H		5305-090-2080	10-38949 <77820>	..SCREW,MACHINE....NOTE 2 & 3	12	EA		4	*	*	*		*	212A	28
				2-220 <77820>	..WASHER,SPRING LOCK.....	12	EA		4						212A	29
					NOTE 2 & 3											
					---*---											
P	H		5935-957-2338	10-40450-145 <77820>	..SHIELDING,GASKET.....	12	EA		1	*	*	*		*	212A	30
					NOTE 3											
P	H		5940-370-9717	10-33670 <77820>	...TERMINAL,LUG....NOTE 2 & 3	12	PG		1	*	*	*		*	212A	32
P	H		5975-030-2013	10-50078 <77820>	...CABLE NIPPLE,ELECTRICAL...	12	PG		1	*	*	*		*	212A	33
					NOTE 2 & 3											
P	H		6145-174-4483	10-37818 <77820>	...WIRE,ELECTRICAL.....NOTE 3	12	EA		AR	*	*	*		*	212A	34
P	H		2925-373-8810	10-78666 <77820>	..TUBE,INSULATION.....NOTE 3	12	EA		2	*	*	*		*	212A	35
P	H		9320-510-4489	10-38771 <77820>	..INSULATION SLEEVING..NOTE 3	12	EA		AR	*	*	*		*	212A	36
P	H		5975-295-9673	10-59297-1 <77820>	..SLEEVE,MARKER,CABLE.....	12	EA		1	*	*	*		*	212A	37
					NOTE 2 & 3											
P	H		5975-295-9674	10-59297-2 <77820>	..SLEEVE,MARKER,CABLE.....	12	EA		1	*	*	*		*	212A	
					NOTE 2 & 3											
P	H		5975-295-9672	10-59297-3 <77820>	..SLEEVE,MARKER,CABLE.....	12	EA		1	*	*	*		*	212A	
					NOTE 2 & 3											
P	H		6145-174-4483	10-37818 <77820>	..WIRE,ELECTRICAL.....NOTE 3	12	EA		AR	*	*	*		*	212A	38
P	H		2925-201-1846	10-78671 <77820>	..BRACKET,ANGLE....NOTE 2 & 3	12	EA		2	*	*	*		*	212A	39
					ATTACHING PARTS											
P	H		5305-207-5341	10-18264 <77820>	..SCREW,MACHINE.....NOTE 3	12	EA		2	*	*	*		*	212A	40
				10-22631 <77820>	..NUT,ELASTIC STOP.NOTE 2 & 3	12	EA		1						212A	41
					---*---											
P	H		5340-370-9647	10-50051 <77820>	..CLAMP,LOOP.....NOTE 2 & 4	12	EA		1	*	*	*		*	212A	43
					ATTACHING PARTS											
P	H		5305-639-8966	10-91464-5 <77820>	..SCREW,MACHINE....NOTE 1 & 4	12	EA		2	*	*	*		*	212A	45
			5310-045-3299	MS35338-42 <96906>	..WASHER,LOCK.....NOTE 4	12	HD		2	*	*	*		*	212A	46
P	H		2925-215-4952	10-176172 <77820>	..CABLE ASSEMBLY.....NOTE 4	12	EA		1	*	*	*		*	212A	47
					ATTACHING PARTS											
P	H		5305-090-2080	10-38949 <77820>	..SCREW,MACHINE.....NOTE 4	12	EA		4	*	*	*		*	212A	48
			5310-045-4007	MS35338-41 <96906>	..WASHER,LOCK.....NOTE 2 & 4	12	HD		4	*	*	*		*	212A	49
					---*---											
P	H		5940-370-9717	10-33670 <77820>	...TERMINAL,LUG....NOTE 2 & 4	12	PG		3	*	*	*		*	212A	50
P	H		5975-295-9673	10-59297-1 <77820>	...SLEEVE,MARKER,CABLE.....	12	EA		1	*	*	*		*	212A	51
					NOTE 2 & 4											
P	H		5975-295-9674	10-59297-2 <77820>	...SLEEVE,MARKER,CABLE.....	12	EA		1	*	*	*		*	212A	52
					NOTE 2 & 4											
P	H		5975-295-9672	10-59297-3 <77820>	...SLEEVE,MARKER,CABLE.....	12	EA		1	*	*	*		*	212A	53
					NOTE 2 & 4											
P	H		5935-957-2338	10-40450-14S <77820>	..SHIELDING,GASKET.....	12	EA		1	*	*	*		*	212A	54
					NOTE 4											
P	H		2925-523-7102	10-59263 <77820>	.GASKET,SEALING.....	12	EA		1	*	*	*		*	212A	55
X1				10-80632Y <77820>	..FLANGE,MAGNETO MOUNTING....	12	EA		1						212A	56
					NOTE 3											
P	H		2925-934-8383	10-82465 <77820>	..HOUSING,MAGNETO.....NOTE 4	12	EA		1	*	*	*		*	212A	
P	H		2920-090-4676	10-32996 <77820>	...STRIP,SEALING.....	12	FT		AR	*	*	*		*	212A	57
P	H		2925-698-4579	10-55327 <77820>	...PLATE,MAGNETO FLANGE.....	12	EA		4	*	*	*		*	212A	58
					ATTACHING PARTS											

(1) SOURCE, MAINT AND REC CODE (a) SOURCE CODE	(b) MAINT LEVEL	(c) REC CODE	(2) FEDERAL STOCK NUMBER	REFERENCE NUMBER	(3) DESCRIPTION	MODELS USABLE ON CH-34C	(4) UNIT OF ISSUE	(5) QTY INC IN UNIT PACK	(6) QTY INC IN UNIT	(7) 30-DAY DS/GS MAINT ALW (a) 1-20	(b) 21-50	(c) 51-100	(8) 1-YR ALW PER 100 EQUIP CNTGCY	(9) DEPOT MAINT ALW PER 100 EQUIP	(10) ILLUSTRATION (a) FIG NO	(b) ITEM NO
			5305-253-5616	MS21318-22	<96906> ...SCREW,DRIVE.....	12	EA		2	*	*	*		*	212A	59
					---*---											
			4730-188-3509	MS20913-1	<96906> ...PLUG,PIPE.....	12	EA		1	REF	REF	REF		*	212A	60
P	H		5305-709-9157	10-26924	<77820> .SCREW.....NOTE 4	12	EA		19	*	*	*		*	212A	61
			5310-045-3299	MS35338-42	<96906> .WASHER,LOCK.....NOTE 4	12	HD		19	*	*	*		*	212A	62
P	H		2925-215-4953	10-354172	<77820> .CONNECTOR AND CABLE ASSEMBLY NOTE 4	12	EA		1	*	*	*		*	212A	63
P	H		2925-927-3592	10-82464	<77820> ..SHELL DOME,PREFABRICATED... NOTE 4	12	EA		1	*	*	*		*	212A	64
P	H		2925-927-3593	10-130722-14S	<77820> ..INSERT,ELECTRICAL CONNECTOR NOTE 4	12	EA		1	*	*	*		*	212A	65
X1				10-3768	<77820> ..WASHER,FLAT.....	12	EA		AR						212A	
P	H		5325-332-5621	10-40822-14	<77820> ..GROMMET.....NOTE 4	12	EA		1	*	*	*		*	212A	66
P	H		2925-927-5761	10-81177-1	<77820> ..SLEEVE,TERMINAL.....NOTE 4	12	EA		2	*	*	*		*	212A	67
P	H		2925-929-0998	10-81177-2	<77820> ..SLEEVE,TERMINAL.....NOTE 4	12	EA		2	*	*	*		*	212A	
P	H		2925-927-5787	10-81177-3	<77820> ..SLEEVE,TERMINAL.....NOTE 4	12	EA		2	*	*	*		*	212A	
P	H		2925-927-5762	10-81177-4	<77820> ..SLEEVE,TERMINAL.....NOTE 4	12	EA		2	*	*	*		*	212A	
P	H		2925-927-5760	10-81177-5	<77820> ..SLEEVE,TERMINAL.....NOTE 4	12	EA		2	*	*	*		*	212A	
P	H		2925-929-0996	10-81177-6	<77820> ..SLEEVE,TERMINAL.....NOTE 4	12	EA		2	*	*	*		*	212A	
P	H		2925-927-5759	10-81177-7	<77820> ..SLEEVE,TERMINAL.....NOTE 4	12	EA		2	*	*	*		*	212A	
P	H		2925-927-5758	10-81177-8	<77820> ..SLEEVE,TERMINAL.....NOTE 4	12	EA		2	*	*	*		*	212A	
P	H		2925-927-5788	10-81177-9	<77820> ..SLEEVE,TERMINAL.....NOTE 4	12	EA		2	*	*	*		*	212A	
P	H		2925-927-3596	10-180115-1	<77820> ..ELECTRICAL WIRE,MAGNETO.... NOTE 4	12	EA		AR	*	*	*		*	212A	68
P	H		5940-283-5404	10-30632	<77820> ..TERMINAL,LUG.....NOTE 4	12	EA		18	*	*	*		*	212A	69
P	H		6150-635-0397	10-75793	<77820> .BUSBAR.....NOTE 2	12	EA		1	*	*	*		*	212A	70
					ATTACHING PARTS											
P	H		5305-639-8966	10-91464-5	<77820> .SCREW,MACHINE.....NOTE 2	12	EA		1	*	*	*		*	212A	71
			5310-045-3299	MS35338-42	<96906> .WASHER,LOCK.....	12	HD		1	*	*	*		*	212A	72
					---*---											
P	H		6150-370-9709	10-75791	<77820> .BUS BAR.....NOTE 2	12	EA		1	*	*	*		*	212A	73
P	H		5305-843-7897	10-176335	<77820> .SCREW,CAP,HEXAGON HEAD..... NOTE 3 & 4	12	EA		6	*	*	*		*	212A	74
P	H		5310-032-2347	10-3677	<77820> .WASHER,LOCK.....NOTE 2,3 & 4	12	EA		6	3	7	15		*	212A	75
P	H		5310-442-0572	10-20774	<77820> .WASHER,FLAT.....NOTE 2,3 & 4	12	EA		6	*	*	*		*	212A	76
P	H		5310-847-1075	10-90408-3	<77820> .NUT,SELF-LOCKING,HEXAGON.... NOTE 4	12	EA		2	*	*	*		*	212A	
P	H		5310-442-0572	10-20774	<77820> .WASHER,FLAT.....NOTE 2 & 4	12	EA		2	*	*	*		*	212A	78
					ATTACHING PARTS											
P	H		2925-290-6110	10-59296	<77820> .PLATE,INSTRUCTION.....NOTE 4	12	EA		1	*	*	*		*	212A	79
P	H		2815-085-7178	10-90500-5	<77820> .SCREW,DRIVE.....NOTE 4	12	EA		2	*	*	*		*	212A	80
					---*---											
P	H		5340-370-9647	10-50051	<77820> .CLAMP,LOOP.....NOTE 2	12	EA		1	*	*	*		*	212A	81
					ATTACHING PARTS											
P	H		5305-928-3885	10-91471-10	<77820> .SCREW,MACHINE.....	12	EA		1	*	*	*		*	212A	82
			5310-167-0662	MS35337-43	<96906> .WASHER,LOCK.....	12	HD		1	*	*	*		*	212A	83
					---*---											
P	H		5340-370-9647	10-50051	<77820> .CLAMP,LOOP.....NOTE 2	12	EA		1	*	*	*		*	212A	84
					ATTACHING PARTS											
P	H		5305-281-4175	10-18184	<77820> .SCREW,MACHINE.....NOTE 2	12	EA		1	*	*	*		*	212A	85
			5310-167-0662	MS35337-43	<96906> .WASHER,LOCK.....	12	HD		1	*	*	*		*	212A	86
					---*---											

(1) SOURCE, MAINT AND REC CODE (a) SOURCE CODE	(b) MAINT LEVEL	(c) REC CODE	(2) FEDERAL STOCK NUMBER	REFERENCE NUMBER	(3) DESCRIPTION	MODELS USABLE ON CH-34C	(4) UNIT OF ISSUE	(5) QTY INC IN UNIT PACK	(6) QTY INC IN UNIT	(7) 30-DAY DS GS MAINT ALW (a) 1-20	(b) 21-50	(c) 51-100	(8) 1-YR ALW PER 100 EQUIP CNTGCY	(9) DEPOT MAINT ALW PER 100 EQUIP	(10) ILLUSTRATION (a) FIG NO	(b) ITEM NO
P	H		2925-992-2508	10-176407	<77820> .LEAD ASSEMBLY.....NOTE 4	12	EA		1	*	*	*		*	212A	87
P	H		5940-370-9717	10-33670	<77820> ..TERMINAL,LUG.....NOTE 2	12	PG		2	*	*	*		*	212A	88
P	H		5975-030-2013	10-50078	<77820> ..CABLE NIPPLE,ELECTRICAL.... NOTE 2	12	PG		2	*	*	*		*	212A	89
F	H		9320-510-4489	10-38771	<77820> ..INSULATION SLEEVING..NOTE 3	12	EA		AR	*	*	*		*	212A	90
				10-79380	<77820> .CONTACT SET,DISTRIBUTOR..... NOTE 1	12	EA		3						212A	92
P	H		5305-208-0312	10-528Z	<77820> .SCREW,MACHINE.....NOTE 1	12	EA		2	*	*	*		*	212A	93
			5310-045-4007	MS35338-41	<96906> .WASHER,LOCK.....	12	HD		2	*	*	*			212A	94
P	F		5310-262-5908	2-171Z	<77820> .WASHER,FLAT.....NOTE 1	12	EA		2	*	*	*		*	212A	95
					---*---											
X1				10-3845Y	<77820> ..SCREW,MACHINE.....	12	EA		1						212A	96
			5310-045-4007	MS35338-41	<96906> ..WASHER,LOCK.....	12	HD		1	*	*	*		*	212A	97
X1				10-3846	<77820> ..NUT,PLAIN RECTANGULAR.....	12	EA		1						212A	98
X1				10-15676	<77820> ..STOP,BREAKER MAIN.....	12	EA		1						212A	99
X1				10-2977	<77820> ..SPRING ASSEMBLY,CONTACT....	12	EA		1						212A	100
X1				10-26108	<77820> ..SUPPORT.....	12	EA		1						212A	101
X1				10-3768-1	<77820> ..SHIM.....	12	EA		AR						212A	102
X1				10-3768-2	<77820> ..WASHER,FLAT.....	12	EA		AR						212A	
P	H		2925-201-8000	10-80709	<77820> ..CONTACT,ELECTRICAL.....	12	EA		1	*	*	*		*	212A	104
X1				10-79344	<77820> ..FOLLOWER ASSEMBLY.....	12	EA		1						212A	105
X1				10-31742	<77820> ..PLATE.....	12	EA		1						212A	106
X1				10-3768-2	<77820> ..WASHER,FLAT.....	12	EA		AR						212A	
P	H		2925-442-0675	10-26095	<77820> .PLATE,BOOSTER BREAKER..... ATTACHING PARTS	12	EA		1	*	*	*		*	212A	107
P	H		5305-928-3885	10-91471-10	<77820> .SCREW,MACHINE.....NOTE 2	12	EA		3					*	212A	108
			5310-167-0662	MS35337-43	<96906> .WASHER,LOCK.....	12	HD		3	*	*	*			212A	109
					---*---											
P	H		2925-442-0826	10-33508-1	<77820> .SHIM,BREAKER ADJUSTING..... NOTE 2	12	EA		AR	*	*	*		*	212A	110
P	H		2925-442-0827	10-33508-2	<77820> .SHIM.....NOTE 2	12	EA		AR	*	*	*		*	212A	
P	H		2925-442-0828	10-33508-3	<77820> .SPACER,PLATE.....NOTE 2	12	EA		AR	*	*	*		*	212A	
P	H		2925-442-0674	10-26094	<77820> .PLATE,BREAKER..... ATTACHING PARTS	12	EA		1	*	*	*		*	212A	111
			5305-912-4837	MS35276-264	<96906> .SCREW,MACHINE.....	12	EA		3	*	*	*		*	212A	112
			5310-167-0662	MS35337-43	<96906> .WASHER,LOCK.....	12	HD		3	*	*	*		*	212A	113
					---*---											
P	H		5355-373-8822	10-78698	<77820> .POINTER,DIAL.....NOTE 2 ATTACHING PARTS	12	EA		1	*	*	*		*	212A	114
P	H		5305-639-6491	10-91471-8	<77820> .SCREW,MACHINE.....NOTE 2	12	EA		1	*	*	*		*	212A	115
			5310-167-0662	MS35337-43	<96906> .WASHER,LOCK.....	12	HD		1	*	*	*		*	212A	116
P	H		2925-523-7111	10-82486	<77820> .WASHER,RECESSED.....NOTE 2	12	EA		1	*	*	*		*	212A	117
					---*---											
P	H		2925-291-1048	10-78695	<77820> .PLATE,DESIGNATION.....NOTE 2 ATTACHING PARTS	12	EA		1	*	*	*		*	212A	118
			5305-151-1358	AN515-5R4	<88044> .SCREW,MACHINE.....	12	EA		2	*	*	*		*	212A	119
			5310-045-4007	MS35338-41	<96906> .WASHER,LOCK.....	12	HD		2	*	*	*		*	212A	120
P	H		5310-373-8799	10-34615	<77820> .WASHER,PLAIN.....NOTE 2	12	EA		2	*	*	*		*	212A	121
					---*---											
P	H		2925-373-8837	10-80630	<77820> .BRIDGE,CONTACT.....NOTE 2 ATTACHING PARTS	12	EA		1	*	*	*		*	212A	122
P	H		5305-638-1425	10-14942	<77820> .SCREW,MACHINE.....NOTE 2	12	EA		2	*	*	*		*	212A	123

(1) SOURCE, MAINT AND REC CODE (a) SOURCE CODE	(b) MAINT LEVEL	(c) REC CODE	(2) FEDERAL STOCK NUMBER	REFERENCE NUMBER	(3) DESCRIPTION	MODELS USABLE ON CH-34C	(4) UNIT OF ISSUE	(5) QTY INC IN UNIT PACK	(6) QTY INC IN UNIT	(7) 30-DAY DS GS MAINT ALW (a) 1-20	(b) 21-50	(c) 51-100	(8) 1-YR ALW PER 100 EQUIP CNTGCY	(9) DEPOT MAINT ALW PER 100 EQUIP	(10) ILLUSTRATION (a) FIG NO	(b) ITEM NO
			5310-045-3299	MS35338-42	<96906> .WASHER,LOCK.....	12	HD		2	*	*	*		*	212A	124
					---*---											
P	H		5340-373-8836	10-80629	<77820> .CAP,PROTECTIVE DUST...NOTE 2	12	EA		1	*	*	*		*	212A	125
P	H		2925-338-4667	10-85955	<77820> .ROTOR,IGNITION DISTRIBUTOR..	12	EA		1	*	2	2	19	*	212A	
					ATTACHING PARTS											
P	H		5305-785-1155	10-85951Y	<77820> .SCREW.....	12	EA		1	*	*	*		*	212A	126
			5310-624-5395	MS35337-47	<96906> .WASHER,LOCK.....	12	HD		1	*	*	*		*	212A	127
P	H		5310-515-7844	10-85953	<77820> .WASHER,FLAT.....NOTE 2	12	EA		1	*	*	*		*	212A	128
					---*---											
P	H		5320-297-2052	10-59293	<77820> ..RIVET,SOLID.....NOTE 2	12	EA		3	*	*	*		*	212A	129
P	H		5310-639-6711	10-9943	<77820> ..WASHER,FLAT.....NOTE 2	12	EA		3	*	*	*		*	212A	130
P	H		2925-927-5763	10-80616	<77820> ..PLATE AND SPRING,MAGNETO...	12	EA		1	*	*	*		*	212A	
P	H		2925-373-8835	10-80628	<77820> ...PLATE,BRUSH RETAINER.....	12	EA		1	*	*	*		*	212A	131
					NOTE 2											
P	H		2925-231-3108	10-52533	<77820> ...SPRING,HELICAL,COMPRESSION	12	EA		2	*	*	*		*	212A	132
					NOTE 2											
P	H		2925-929-0997	10-80617	<77820> ..PLATE AND SPRING ASSEMBLY..	12	EA		1	*	*	*		*	212A	
P	H		2925-373-8834	10-80625	<77820> ...PLATE,BRUSH RETAINER.....	12	EA		1	*	*	*		*	212A	133
					NOTE 2											
P	H		2925-231-3108	10-52533	<77820> ...SPRING,HELICAL,COMPRESSION	12	EA		1	*	*	*		*	212A	134
					NOTE 2											
P	H		5977-373-8812	10-78670	<77820> ..BRUSH,ELECTRICAL CONTACT...	12	EA		3	*	*	*		*	212A	135
					NOTE 2											
P	H		5970-373-8811	10-78669	<77820> ..INSULATOR,CARBON BRUSH.....	12	EA		3	*	*	*		*	212A	136
					NOTE 2											
P	H		5310-515-7799	10-85952-1	<77820> .WASHER,KEYWAY.....NOTE 2	12	EA		AR	*	*	*		*	212A	138
P	H		5310-515-9743	10-85952-2	<77820> .WASHER,KEYWAY.....NOTE 2	12	EA		AR	*	*	*		*	212A	
P	H		2925-664-2522	10-85952-3	<77820> .SHIM-0.020 IN.THK.....NOTE 2	12	EA		AR	*	*	*		*	212A	
P	H		5310-515-9744	10-85952-4	<77820> .WASHER,KEYWAY.....NOTE 2	12	EA		AR	*	*	*		*	212A	
P	H		5315-687-5218	10-20688	<77820> .KEY,WOODRUFF.....	12	EA		1	*	*	*		*	212A	139
P	H		2925-373-8824	10-80614	<77820> .PLATE,BALL BEARING,RETAINING	12	EA		1	*	*	*		*	212A	140
					ATTACHING PARTS											
P	H		5305-639-6491	10-91471-8	<77820> .SCREW,MACHINE.....NOTE 2	12	EA		3	*	*	*		*	212A	141
			5310-167-0662	MS35337-43	<96906> .WASHER,LOCK.....NOTE 2	12	HD		3	*	*	*		*	212A	142
					---*---											
P	H		5310-373-8819	10-78690	<77820> .NUT,PLAIN,ROUND.....NOTE 2	12	EA		1	*	*	*		*	212A	143
P	H		5310-373-8820	10-78691	<77820> .WASHER,KEY.....NOTE 2	12	EA		1	*	*	*		*	212A	144
P	H		3110-227-4217	10-81826	<77820> .BEARING,BALL,ANNULAR.....	12	EA		1	*	*	*		*	212A	145
P	H		2925-370-9679	10-56933	<77820> .DEFLECTOR,DIRT AND LIQUID...	12	EA		1	*	*	*		*	212A	146
					NOTE 2											
P	H		2925-394-2332	10-26089	<77820> .CAM,BREAKER.....	12	EA		2	*	*	2	10	*	212A	147
				10-20688	<77820> .KEY,WOODRUFF.....NOTE 2	12	EA		2						212A	148
P	H		2925-370-9679	10-56933	<77820> .DEFLECTOR,DIRT AND LIQUID...	12	EA		1	*	*	*		*	212A	149
					NOTE 2											
P	H		3110-227-4492	10-81816	<77820> .BEARING,BALL,ANNULAR.....	12	EA		1	*	*	*		*	212A	150
P	H		2925-325-4374	10-85950	<77820> .SHAFT,CAM.....	12	EA		1	*	*	2		*	212A	151
P	H		2925-325-4372	10-82466	<77820> .HOUSING,BREAKER.....	12	EA		1	*	*	2		*	212A	152
P	H	R	2925-504-3665	10-85905	<77820> .LEAD,ELECTRICAL.....NOTE 2	12	EA		1	*	*	*		*	212A	153
P	H		2925-980-5748	10-82463	<77820> .LEAD ASSEMBLY.....	12	EA		1	*	*	*		*	212A	154
P	H		2825-570-6309	10-176119	<77820> .LEAD ASSEMBLY.....NOTE 4	12	EA		1	*	*	*		*	212A	155
					ATTACHING PARTS											
P	H		5310-167-1343	10-2501	<77820> .NUT,PLAIN,HEXAGON.....NOTE 2	12	HD		1	*	*	*		*	212A	156

(1) SOURCE, MAINT AND REC CODE (a) SOURCE CODE	(b) MAINT LEVEL	(c) RECOV CODE	(2) FEDERAL STOCK NUMBER	REFERENCE NUMBER	(3) DESCRIPTION	MODELS USABLE ON CH-34C	(4) UNIT OF ISSUE	(5) QTY INC IN UNIT PACK	(6) QTY INC IN UNIT	(7) 30-DAY DS GS MAINT ALW (a) 1-20	(b) 21-50	(c) 51-100	(8) 1-YR ALW PER 100 EQUIP CNTGCY	(9) DEPOT MAINT ALW PER 100 EQUIP	(10) ILLUSTRATION (a) FIG NO	(b) ITEM NO
			5310-167-0662	MS35337-43 <96906>	.WASHER,LOCK.....	12	HD		1	*	*	*		*	212A	157
					---*---											
				10-38482 <77820>	..TERMINAL,LUG.....NOTE 2	12	EA		1						212A	158
P	H		5940-370-9717	10-33670 <77820>	..TERMINAL,LUG.....NOTE 2 & 4	12	PG		1	*	*	*		*	212A	
P	H		5940-342-0997	10-82462 <77820>	..TERMINAL,LUG.....NOTE 2	12	PG		1	*	*	*		*	212A	159
P	H		5975-030-2013	10-50078 <77820>	..CABLE NIPPLE,ELECTRICAL.... NOTE 2 & 4	12	PG		1	*	*	*		*	212A	160
P	H		9320-510-4489	10-38771 <77820>	..INSULATION SLEEVING.....	12	EA		AR	*	*	*		*	212A	161
P	H		2925-927-3597	10-180050-2 <77820>	..LEAD ASSEMBLY,MAGNETO.....	12	EA		AR	*	*	*		*	212A	162
P	H		5340-370-9647	10-50051 <77820>	.CLAMP,LOOP.....NOTE 2 & 4	12	EA		1	*	*	*		*	212A	163
					ATTACHING PARTS											
P	H		5305-639-8966	10-91464-5 <77820>	.SCREW,MACHINE.....NOTE 1 & 4	12	EA		1	*	*	*		*	212A	164
			5310-045-3299	MS35338-42 <96906>	.WASHER,LOCK.....NOTE 4	12	HD		1	*	*	*		*	212A	165
					---*---											
P	H		2925-980-5749	10-59284 <77820>	.LEAD ASSEMBLY.....	12	EA		1	*	*	*		*	212A	166
					ATTACHING PARTS											
P	H		5310-167-1343	10-2501 <77820>	.NUT,PLAIN,HEXAGON.....NOTE 2	12	HD		1	*	*	*		*	212A	167
			5310-167-0662	MS35337-43 <96906>	.WASHER,LOCK.....	12	HD		1	*	*	*		*	212A	168
					---*---											
				10-38482 <77820>	..TERMINAL,LUG.....NOTE 2	12	EA		1						212A	169
P	H		5940-033-2483	10-59282 <77820>	..TERMINAL,LUG.....NOTE 2	12	EA		1	*	*	*		*	212A	170
P	H		5975-030-2013	10-50078 <77820>	..CABLE NIPPLE,ELECTRICAL.... NOTE 2	12	PG		1	*	*	*		*	212A	171
P	H		9320-510-4489	10-38771 <77820>	..INSULATION SLEEVING.....	12	EA		AR	*	*	*		*	212A	172
P	H		2925-927-3597	10-180050-2 <77820>	..LEAD ASSEMBLY,MAGNETO.....	12	EA		AR	*	*	*		*	212A	173
P	H		5305-067-7792	10-91464-4 <77820>	.SCREW,MACHINE.....	12	EA		2	*	*	*		*	212A	174
			5310-045-3299	MS35338-42 <96906>	.WASHER,LOCK.....	12	HD		2	*	*	*		*	212A	175
P	H		5910-373-8808	10-78640 <77820>	.CONDENSER.....	12	EA		1	*	*	*		*	212A	176
					ATTACHING PARTS											
P	H		5305-639-6491	10-91471-8 <77820>	.SCREW,MACHINE.....NOTE 2	12	EA		2	*	*	*		*	212A	177
			5310-167-0662	MS35337-43 <96906>	.WASHER,LOCK.....NOTE 2	12	HD		2	*	*	*		*	212A	178
					---*---											
P	H		5910-544-6692	10-78642 <77820>	.CAPACITOR,CONDENSER.....	12	EA		1	*	*	*		*	212A	179
					ATTACHING PARTS											
P	H		5305-639-6491	10-91471-8 <77820>	.SCREW,MACHINE.....NOTE 2	12	EA		2	*	*	*		*	212A	180
			5310-167-0662	MS35337-43 <96906>	.WASHER,LOCK.....	12	HD		2	*	*	*		*	212A	181
					---*---											
P	H		2925-033-2452	10-52586 <77820>	.COIL,MAGNETO.....	12	EA		2	*	2	2		*	212A	182
					ATTACHING PARTS											
P	H		5305-485-9182	10-52541 <77820>	.SCREW,MACHINE.....NOTE 2	12	EA		4	*	*	*		*	212A	183
P	H		5310-032-2347	10-3677 <77820>	.WASHER,LOCK.....NOTE 2	12	EA		8	REF	REF	REF		*	212A	184
P	H		5310-485-9173	10-52519 <77820>	.WASHER,FLAT.....NOTE 2	12	EA		8	*	*	*		*	212A	185
					---*---											
P	H		5977-373-8840	10-80636 <77820>	.BRUSH,ELECTRICAL CONTACT....	12	EA		1	*	*	*		*	212A	186
			2925-373-8831	10-80620 <77820>	.PLATE USE UNTIL EXHAUSTED,.. NO REPLACEMENT NOTE 3	12	EA		1						212A	187
P	H		2925-215-4954	10-85900 <77820>	.PLATE,DISTRIBUTOR.....NOTE 4	12	EA		1	*	*	*		*	212A	
					ATTACHING PARTS											
P	H		5305-207-4287	10-17702 <77820>	.SCREW,MACHINE.....NOTE 2	12	EA		3	*	*	*		*	212A	188
			5310-045-3299	MS35338-42 <96906>	.WASHER,LOCK.....	12	HD		3	*	*	*		*	212A	189
P	H		5310-217-1852	10-24115 <77820>	.WASHER,FLAT.....NOTE 2	12	EA		3	*	*	*		*	212A	190
					---*---											

(1) SOURCE, MAINT AND REC CODE (a) SOURCE CODE	(b) MAINT LEVEL	(c) REC CODE	(2) FEDERAL STOCK NUMBER	REFERENCE NUMBER	(3) DESCRIPTION	MODELS USABLE ON CH-34C	(4) UNIT OF ISSUE	(5) QTY INC IN UNIT PACK	(6) QTY INC IN UNIT	(7) 30-DAY DS GS MAINT ALW (a) 1-20	(b) 21-50	(c) 51-100	(8) 1-YR ALW PER 100 EQUIP CNTGCY	(9) DEPOT MAINT ALW PER 100 EQUIP	(10) ILLUSTRATION (a) FIG NO	(b) ITEM NO
				10-59264	<77820> .PIN.....NOTE 2 & 3	12	EA		18						212A	191
			5310-045-4007	MS35338-41	<96906> .WASHER,LOCK.....NOTE 3	12	HD		18	*	*	*		*	212A	192
				10-80622	<77820> .PIN.....NOTE 2 & 3	12	EA		1						212A	193
				10-3498	<77820> .WASHER,LOCK.....NOTE 2 & 3	12	EA		1						212A	194
			5315-234-1856	MS24665-155	<96906> .PIN,COTTER.....	12	HD		1	*	*	*		*	212A	195
			5310-167-1281	AN310C5	<88044> .NUT,CASTELLATED,HEXAGON.....	12	HD		1	*	*	*		*	212A	196
			5310-407-7566	MS35338-45	<96906> .WASHER,LOCK.....NOTE 2	12	HD		1	*	*	*		*	212A	197
P	H		2925-302-9923	10-56954	<77820> .LOCK,BREAKER,CAM TIMING.....	12	EA		1	*	*	*		*	212A	198
P	H		2925-370-9685	10-59244	<77820> .SLEEVE,TIMING ADJUSTMENT.... NOTE 3	12	EA		1	*	*	*		*	212A	199
P	H		2925-211-4759	10-15741	<77820> .RATCHET,TIMING.....NOTE 4	12	EA		1	*	*	*		*	212A	
P	H		2925-370-9694	10-59294	<77820> .GEAR,DISTRIBUTOR DRIVE.....	12	EA		1	*	*	*		*	212A	200
P	H		2925-959-6144	10-371091	<77820> .GEAR,DISTRIBUTOR DRIVE.....	12	EA		1	*	*	*		*	212A	
P	H		2925-957-7329	10-371014	<77820> .CUP,GEAR,MAGNETO.....	12	EA		1	*	*	*		*	212A	201
P	H		2925-370-9681	10-56958	<77820> .SPRING,HELICAL,COMPRESSION.. NOTE 2	12	EA		1	*	*	*		*	212A	202
P	H		2925-370-9712	10-76759	<77820> .GEAR,SPUR..... ATTACHING PARTS	12	EA		1	*	2	2		*	212A	203
			5315-234-1864	MS24665-302	<96906> .PIN,COTTER.....	12	HD		1	*	*	*		*	212A	204
P	H		5310-596-7173	10-948Z	<77820> .NUT,CASTELLATED,HEXAGON..... NOTE 2	12	EA		1	*	*	*		*	212A	205
			5310-637-9541	MS35338-46	<96906> .WASHER,LOCK.....NOTE 2	12	HD		1	*	*	*		*	212A	206
P	H		5310-143-5631	10-24812	<77820> .WASHER..... ---*---	12	EA		1	*	*	*		*	212A	207
P	H		2925-370-9687	10-59253	<77820> .END PLATE..... ATTACHING PARTS	12	EA		1	*	*	*		*	212A	208
P	H		5305-639-2807	10-91675-64	<77820> .SCREW,MACHINE.....NOTE 2	12	EA		5	*	*	*		*	212A	209
			5310-167-0662	MS35337-43	<96906> .WASHER,LOCK..... ---*---	12	HD		5	*	*	*		*	212A	210
P	F		3110-227-4283	10-52595	<77820> .BEARING,BALL,ANNULAR.....	12	EA		1	*	*	*		*	212A	211
P	H		2925-033-2463	10-54156	<77820> .RING,ADAPTER.....NOTE 2	12	EA		1	*	*	*		*	212A	212
P	H		2925-370-9667	10-54155	<77820> .SPRING,EXPANDER.....NOTE 2	12	EA		1	*	*	*		*	212A	213
P	H		2925-732-8906	10-125921	<77820> .ADAPTER,MAGNETO..... ATTACHING PARTS	12	EA		1	*	*	*		*	212A	214
P	H		5305-207-5341	10-18264	<77820> .SCREW,MACHINE.....	12	EA		6	*	*	*		*	212A	215
			5310-167-0662	MS35337-43	<96906> .WASHER,LOCK.....NOTE 2 ---*---	12	HD		6	*	*	*		*	212A	216
P	H		5330-599-2056	10-75809	<77820> .PACKING,PREFORMED.....	12	EA		1	*	*	*		*	212A	217
P	H		2925-839-8234	10-176161	<77820> .BUSHING,SLEEVE.....	12	EA		1	*	*	*		*	212A	218
P	H		5330-918-6341	10-371012	<77820> .SEAL,PLAIN ENCASED.....	12	EA		1	*	*	2		*	212A	219
P	H		3110-542-9134	10-81896	<77820> .BEARING,BALL,ANNULAR.....	12	EA		1	*	*	*		*	212A	220
P	H		2925-599-6350	10-75817	<77820> .PACKING,PREFORMED.....	12	EA		1	2	2	3		*	212A	221
P	H		2925-554-4823	10-56941	<77820> .ROTOR,MAGNETO.....NOTE 3	12	EA		1	*	*	*		*	212A	222
P	H		2925-927-3594	10-176442	<77820> .MAGNET,MAGNETO,ENGINE.NOTE 4	12	EA		1	*	*	*		*	212A	
			2925-740-7029	10-176165	<77820> .HOUSING,MAGNETO USE..... UNTIL EXHAUSTED,NO REPLACEMENT	12	EA		1						212A	223
P	H		2925-927-3591	10-157320Y	<77820> .HOUSING,MAGNETO.....NOTE 4	12	EA		1	*	*	*		*	212A	
P	H		5307-859-0788	10-176168	<77820> ..STUD.....NOTE 4	12	EA		2	*	*	*		*	212A	
P	F		2925-605-5932	10-88517-5	<77820> REPAIR KIT MAGNETO U/O..... 2925-294-2596 SEE FUNCTIONAL GROUP 50 FOR	12	EA		1	*	2	2	22	*	212A	

(1) SOURCE, MAINT AND REC CODE (a) SOURCE CODE	(b) MAINT LEVEL	(c) REC CODE	(2) FEDERAL STOCK NUMBER	REFERENCE NUMBER	(3) DESCRIPTION	MODELS USABLE ON CH-34C	(4) UNIT OF ISSUE	(5) QTY INC IN UNIT PACK	(6) QTY INC IN UNIT	(7) 30-DAY DS/GS MAINT ALW (a) 1-20	(b) 21-50	(c) 51-100	(8) 1-YR ALW PER 100 EQUIP CNTGCY	(9) DEPOT MAINT ALW PER 100 EQUIP	(10) ILLUSTRATION (a) FIG NO	(b) ITEM NO
					CONTINUED										212A	
					COMPONENTS											
			2925-611-3910	10-88518-49 <77820>	KIT,MAJOR REPAIR,MAGNETO.....	12	EA		1	*	*	*			212A	
					U/O 2925-294-2596 USE											
					UNTIL EXHAUSTED,THEN											
					REQUISITION INDIVIDUAL											
					COMPONENTS											
					NOTE 1											
					COMPONENT OF KIT											
					2925-605-5932											
					NOTE 2											
					COMPONENT OF KIT											
					2925-611-3910											
					NOTE 3											
					U/O 2925-294-2596											
					NOTE 4											
					U/O 2925-065-7746											
					IGNITION CABLE,COILS AND.....	12			1						213	
					SPARK PLUGS SEE FIG.183A											
					FOR NHA											
			2925-090-4714	10-75700-1 <77820>	IGNITION HARNESS ASSEMBLY....	12									213	
					RPL-BY 2925-671-4584											
P	F		2925-671-4584	10-89385-1 <77820>	IGNITION HARNESS ASSEMBLY....	12	EA		1	*	*	*		*	213	1
					RPLS-- 2925-090-4714 SEE											
					FIG.213A FOR BREAKDOWN											
					ATTACHING PARTS											
			5310-088-0553	MS21044N5 <96906>	NUT,SELF-LOCKING,HEXAGON.....	12	HD		4	*	*	*		*	213	2
P	F		5310-152-2656	270111 <66640>	WASHER.....	12	EA		4	*	*	*		*	213	3
					---*---											
P	F		2925-293-4695	10-80640-1 <77820>	COIL ASSEMBLY-IGNITION.....	12	EA		9	2	3	7	79	*	213	4
					ATTACHING PARTS											
			5306-180-4212	AN102908 <88044>	BOLT,MACHINE.....	12	EA		18	*	*	*		*	213	5
P	O		5310-274-4551	34D241 <66640>	WASHER,FLAT.....	12	EA		9	*	*	*		*	213	6
					---*---											
			2925-037-8920	10-82490-1 <77820>	LEAD,ELECTRICAL.....	12									213	
					RPL-BY 2925-730-2095											
P	O		2925-730-2095	10-377044-1 <77820>	LEAD,ELECTRICAL.....		EA		18	10	25	51	610	*	213	7
					RPLS-- 2925-037-8920											
P	O		2925-211-4761	MS21267-6 <96906>	.CONTACT,SPARK PLUG.....	12	EA		2	*	2	2		*	213	
P	O		2925-562-9867	10-90242-1 <77820>	.SPRING,HELICAL,COMPRESSION..	12	EA		2	9	22	44		*	213	
P	O		5970-343-2955	10-82491 <77820>	.SLEEVE,IGNITION TERMINAL....	12	EA		2	*	*	*		*	213	
					U/W 2925-037-8920											
P	O		2925-440-1769	10-52617 <77820>	.ADAPTER,SPRING RETAINING....	12	EA		2	*	*	*		*	213	
					U/O 2925-037-8920											
P	O		5975-627-0351	10-78506-7 <77820>	.CONDUIT ASSEMBLY.....	12	EA		1	*	*	*		*	213	
					U/O 2925-037-8920											

(1) SOURCE, MAINT AND REC CODE (a) SOURCE CODE	(b) MAINT LEVEL	(c) REC CODE	(2) FEDERAL STOCK NUMBER	REFERENCE NUMBER	(3) DESCRIPTION	MODELS USABLE ON CH-34C	(4) UNIT OF ISSUE	(5) QTY INC IN UNIT PACK	(6) QTY INC IN UNIT	(7) 30-DAY DS/GS MAINT ALW (a) 1-20	(b) 21-50	(c) 51-100	(8) 1-YR ALW PER 100 EQUIP CNTGCY	(9) DEPOT MAINT ALW PER 100 EQUIP	(10) ILLUSTRATION (a) FIG NO	(b) ITEM NO
P	F		2925-326-4535	10-75710 <77820>	LEAD ASSEMBLY-MAGNETO SEE... FIG.213B FOR BREAKDOWN ATTACHING PARTS	12	EA		2	*	*	2		*	213	8
			5306-285-5524	AN101106 <88044>	BOLT,MACHINE.....	12	EA		2	*	*	*		*	213	9
			5310-514-8948	MS35337-45 <96906>	WASHER,LOCK.....	12	HD		2					*	213	10
					---*---											
P	O	U	2925-056-7058		SPARK PLUG-3/4 IN.-20 LEAD... SIZE,18 MM SCREW BASE THD SIZE,PLATINUM ELECTRODE MIL-S-7886/1002 RPLS-- 2925-587-6936 INTRCH 2925-328-2018,& 2925-801-8456	12	EA		18	196	491	982		95	213	11
			2925-141-9261	AC271 <70040>	SPARK PLUG-3/4 IN.-20 LEAD... SIZE,18 MM SCREW BASE THD SIZE,MASSIVE ELECTRODE USE UNTIL EXHAUSTED,NO REPLACEMENT	12	EA		18	*	*	*			213	
			2925-639-6677	RHB37N <11583>	SPARK PLUG-3/4 IN.-20 LEAD... SIZE,18 MM SCREW BASE THD SIZE,MASSIVE ELECTRODE USE UNTIL EXHAUSTED,NO REPLACEMENT	12	EA		18						213	
			2925-733-3516	SL300A <94430>	SPARK PLUG-3/4 IN.-20 LEAD... SIZE,18 MM SCREW BASE THD SIZE,MASSIVE ELECTRODE USE UNTIL EXHAUSTED,NO REPLACEMENT	12	EA		18	*	*	*			213	
			2925-633-6859	AC273 <70040>	SPARK PLUG-3/4 IN.-20 LEAD... SIZE,18 MM SCREW BASE THD SIZE,MASSIVE ELECTRODE,FOR USE WHEN STANDARD PLUGS ARE NOT AVAILABLE,& TEST STAND OR DEPRESERVATION RUN USE UNTIL EXHAUSTED, NO REPLACEMENT	12	EA		18	*	*	*			213	
			2925-646-7957	BG341 <05045>	SPARK PLUG-3/4 IN.-20 LEAD... SIZE,18 MM SCREW BASE THD SIZE,MASSIVE ELECTRODE,FOR USE WHEN STANDARD PLUGS ARE NOT AVAILABLE,& TEST STAND OR DEPRESERVATION RUN USE UNTIL EXHAUSTED, NO REPLACEMENT	12	EA		18	*	*	*			213	
			2925-684-2988	RHB29N <11583>	SPARK PLUG-3/4 IN.-20 LEAD... SIZE,18 MM SCREW BASE THD SIZE,MASSIVE ELECTRODE,FOR USE WHEN STANDARD PLUGS ARE NOT AVAILABLE,& TEST STAND OR DEPRESERVATION RUN USE UNTIL EXHAUSTED,	12	EA		18	*	*	*			213	

(1) SOURCE, MAINT AND REC CODE (a) SOURCE CODE	(b) MAINT LEVEL	(c) REC CODE	(2) FEDERAL STOCK NUMBER	REFERENCE NUMBER	(3) DESCRIPTION	MODELS USABLE ON CH-34C	(4) UNIT OF ISSUE	(5) QTY INC IN UNIT PACK	(6) QTY INC IN UNIT	(7) 30-DAY DS, GS * MAINT ALW (a) 1-20	(b) 21-50	(c) 51-100	(8) 1-YR ALW PER 100 EQUIP CNTGCY	(9) DEPOT MAINT ALW PER 100 EQUIP	(10) ILLUSTRATION (a) FIG NO	(b) ITEM NO
					CONTINUED										213	
					NO REPLACEMENT											
			2925-859-8579	RHB32N <11583>	SPARK PLUG-3/4 IN.-20 LEAD... SIZE,18 MM SCREW BASE THD SIZE,MASSIVE ELECTRODE,FOR USE WHEN STANDARD PLUGS ARE NOT AVAILABLE,& TEST STAND OR DEPRESERVATION RUN USE UNTIL EXHAUSTED, NO REPLACEMENT	12	EA		18	*	*	*			213	
			2925-701-9991	AC272 <70040>	SPARK PLUG-3/4 IN.-20 LEAD... SIZE,18 MM SCREW BASE THD SIZE,MASSIVE ELECTRODE,FOR USE ON TEST STAND OR DEPRESERVATION RUN ONLY	12	EA		18	*	*	*			213	
P	F		2925-328-2073	AN4164-12 <88044>	..SHIELD,SPARK PLUG.....	12	EA		1	2	2	4		*	213	
P	F		2925-671-4584	10-89385-1 <77820>	IGNITION HARNESS ASSEMBLY.... SEE FIG.213 FOR NHA	12	EA		1	*	*	*		*	213A	
			5340-186-3389	10-75718 <83930>	.CLAMP,LOOP RPL-BY..... 5340-990-9301	12									213A	
			5340-990-9301	EAB700D7 <81996>	.CLAMP,LOOP RPLS--..... 5340-186-3389	12	EA		1	*	*	*		*	213A	1
			5340-989-4574	EAB700D17 <81996>	.CLAMP,LOOP..... ATTACHING PARTS	12	EA		9	*	*	*		*	213A	2
P	F		5306-720-7952	10-23992 <77820>	.BOLT,MACHINE..... ---*---	12	EA		9	*	*	*		*	213A	3
P	F		5935-581-3085	10-37230-14P <77820>	.CONNECTOR,ELECTRICAL..... ATTACHING PARTS	12	EA		1	*	*	*		*	213A	4
			5305-614-0270	MS35265-44 <96906>	.SCREW,MACHINE.....	12	EA		4	*	*	*		*	213A	5
			5310-045-3299	MS35338-42 <96906>	.WASHER,LOCK..... ---*---	12	HD		4	*	*	*		*	213A	6
P	F		5999-254-5669	10-40450-22S <77820>	.GASKET.....	12	EA		1	*	*	*		*	213A	7
P	F		5935-704-1482	10-130712-3S <77820>	.INSERT,ELECTRICAL.....	12	EA		9	*	*	*		*	213A	8
P	F		5325-693-2837	10-59894 <77820>	.GROMMET.....	12	EA		9	*	*	*		*	213A	9
P	D		6145-174-4483	10-37818 <71102>	.WIRE,ELECTRICAL.....	12	EA		1					*	213A	10
P	H		2925-698-4591	10-75715 <77820>	.CONDUIT ASSEMBLY.....	12	EA		9	*	*	*		*	213A	11
P	F		2925-708-8334	10-89398 <77820>	.CONDUIT ASSEMBLY.....	12	EA		1	*	*	*		*	213A	12
P	F		5340-663-2642	10-70500-22 <77820>	.PLUG.....	12	EA		1	*	*	*		*	213A	
P	F		2925-326-4535	10-75710 <77820>	LEAD ASSEMBLY,MAGNETO SEE... FIG.213 FOR NHA	12	EA		1	*	*	REF		*	213B	

(1) SOURCE, MAINT AND REC CODE (a) SOURCE CODE	(b) MAINT LEVEL	(c) REC CODE	(2) FEDERAL STOCK NUMBER	(3) DESCRIPTION REFERENCE NUMBER			MODELS USABLE ON CH-34C	(4) UNIT OF ISSUE	(5) QTY INC IN UNIT PACK	(6) QTY INC IN UNIT	(7) 30-DAY DS GS MAINT ALW (a) 1-20	(b) 21-50	(c) 51-100	(8) 1-YR ALW PER 100 EQLIP CNTGCY	(9) DEPOT MAINT ALW PER 100 EQLIP	(10) ILLUSTRATION (a) FIG NO	(b) ITEM NO
						CONTINUED										213B	
						ATTACHING PARTS											
				738-16-10	<77820>	.CLIP,SUPPORT.....NOTE 1	12	EA		2						213B	1
			5305-150-9210	AN502-10-12	<88044>	.SCREW,MACHINE.....	12	EA		2	*	*	*		*	213B	3
			5310-167-0662	MS35337-43	<96906>	.WASHER,LOCK.....	12	HD		2	*	*	*		*	213B	4
						---*---											
				10-37289-14S	<77820>	.CONNECTOR,PLUG,ELECTRICAL... NOTE 1	12	EA		1						213B	6
				10-101196-14P	<77820>	.CONNECTOR,PLUG,ELECTRICAL... NOTE 1	12	EA		1						213B	7
P	H		5325-332-5621	10-40822-14	<77820>	.GROMMET,ELECTRICAL CONNECTOR NOTE 1	12	EA		2	*	*	*		*	213B	8
P	D		6145-174-4483	10-37818	<77820>	.WIRE,ELECTRICAL.....	12	EA		AR					*	213B	9
P	H		2925-776-1988	10-88518-52	<77820>	REPAIR KIT,LEAD ASSEMBLY..... U/O 2925-326-4535 SEE FUNCTIONAL GROUP 50 FOR COMPONENTS	12	EA		1	*	*	*		*	213B	
						NOTE 1											
						COMPONENT OF KIT 2925-776-1988											

(1) SOURCE, MAINT AND REC CODE (a) SOURCE CODE	(b) MAINT LEVEL	(c) RECOVERY CODE	(2) FEDERAL STOCK NUMBER	REFERENCE NUMBER	(3) DESCRIPTION	MODELS USABLE ON CH-34C	(4) UNIT OF ISSUE	(5) QTY INC IN UNIT PACK	(6) QTY INC IN UNIT	(7) 30-DAY DS/GS MAINT ALW (a) 1-20	(b) 21-50	(c) 51-100	(8) 1-YR ALW PER 100 EQUIP CNTGCY	(9) DEPOT MAINT ALW PER 100 EQUIP	(10) ILLUSTRATION (a) FIG NO	(b) ITEM NO
					CARBURETOR AND AIR INLET..... SCREEN SEE FIG.183A FOR NHA	12			1						214	
		R	2915-608-6856	391513-2 <06848>	.CARBURETOR AND ADAPTER..... ASSEMBLY RPL-BY 2915-913-7043	12									214	
		R	2915-731-9396	391722-5 <06848>	.CARBURETOR,PRESSURE..... INJECTION RPL-BY 2915-913-7043 SEE FIG. 214A FOR BREAKDOWN	12									214	
P	O	R	2915-913-7043	391869-1 <06848>	.CARBURETOR,PRESSURE..... INJECTION RPLS-- 2915-608-6856,& 2915-731-9396	12	EA		1	2	4	8	101	*	214	1
					ATTACHING PARTS											
			5310-950-0039	MS21044N6 <96906>	.NUT,SELF-LOCKING,HEXAGON....	12	HD		8	*	*	*		*	214	2
P	O		5310-596-8794	2093D43 <66640>	.WASHER,BALL SOCKET.....	12	EA		8	*	*	*		*	214	3
					---*---											
P	O		2810-857-0431	148858 <66640>	.GASKET,CARBURETOR ADAPTER... RPLS-- 2810-310-9088	12	EA		1	4	11	22		*	214	4
			2810-306-5917	413817 <66640>	.SCREEN ASSEMBLY RPL-BY..... 2810-939-7789	12									214	
			2810-887-2139	433468 <66640>	.SCREEN ASSEMBLY RPL-BY..... 2810-939-7789	12									214	
P	O		2810-939-7789	433903 <66640>	.SCREEN,CARBURETOR RPLS--... 2810-306-5917, 2810-887-2139	12	EA		1	2	3	5		*	214	5
P	O		5325-923-1041	149173 <66640>	..GROMMET,RUBBER.....	12	EA		1	*	*	*		*	214	
P	O		2810-310-9094	68796 <66640>	.GASKET.....	12	EA		2	3	8	17		*	214	6
					CARBURETOR AND ADAPTER..... ASSEMBLY	12			1						214A	
		R	2915-731-9396	391722-5 <06848>	CARBURETOR,PRESSURE..... INJECTION RPLS-- SEE FIG. 214 FOR NHA	12	EA								214A	
P	D		2915-037-9290	361143 <06848>	.PLATE,IDENTIFICATION.....	12	EA		1					*	214A	1
					ATTACHING PARTS											
			5305-753-7077	MS24621-2 <96906>	.SCREW,TAPPING,THREAD.....	12	HD		2					*	214A	2
					---*---											
AH	H			391539-28-1 <06848>	.CONTROL ASSEMBLY,AUTOMATIC.. MIXTURE	12	EA		1						214A	4
					ATTACHING PARTS											
P	F		2915-307-5340	360538 <06848>	.BRACKET CLAMP,AUTOMATIC..... MIXTURE CONTROL	12	EA		1	*	*	*		*	214A	5
					---*---											
			2915-485-1380	398929 <06848>	.GASKET,AUTOMATIC MIXTURE.... CONTROL NOTE 4	12	EA		1	*	*	*			214A	6

(1) SOURCE, MAINT AND REC CODE (a) SOURCE CODE	(b) MAINT LEVEL	(c) REC CODE	(2) FEDERAL STOCK NUMBER	REFERENCE NUMBER	(3) DESCRIPTION	MODELS USABLE ON CH-34C	(4) UNIT OF ISSUE	(5) QTY INC IN UNIT PACK	(6) QTY INC IN UNIT	(7) 30-DAY DS GS MAINT ALW (a) 1-20	(b) 21-50	(c) 51-100	(8) 1-YR ALW PER 100 EQUIP CNTGCY	(9) DEPOT MAINT ALW PER 100 EQUIP	(10) ILLUSTRATION (a) FIG NO	(b) ITEM NO
P	H		2915-098-3936	365942	<06848> .TUBE ASSEMBLY,CARBURETOR....	12	EA		1	*	*	*		*	214A	7
P	H		2915-307-5334	360401	<06848> .TUBE ASSEMBLY,FUEL.....	12	EA		1	*	*	*		*	214A	8
					AIRCRAFT											
			4730-287-2345	AN790C5	<88044> .ELBOW.....	12	EA		1	*	*	*		*	214A	9
			4730-287-2345	AN790C5	<88044> .ELBOW.....	12	EA		1	*	*	*		*	214A	10
			4730-287-2345	AN790C5	<88044> .ELBOW.....	12	EA		1	*	*	*		*	214A	11
			4730-287-2345	AN790C5	<88044> .ELBOW.....	12	EA		1	*	*	*		*	214A	12
P	H		2915-098-3939	365949	<06848> .TUBE ASSEMBLY,CARBURETOR....	12	EA		1	*	*	*		*	214A	13
					ATTACHING PARTS											
P	H		5305-298-4665	364746	<06848> .SCREW,MACHINE.....NOTE 4	12	EA		1	*	*	*		*	214A	14
			5310-141-1795	AN960-416	<88044> .WASHER,FLAT.....	12	HD		2	*	*	*		*	214A	15
			5305-150-9267	AN503-416-12	<88044> .SCREW,MACHINE.....	12	HD		2	*	*	*		*	214A	16
			5310-141-1795	AN960-416	<88044> .WASHER,FLAT.....	12	HD		2	*	*	*		*	214A	17
					---*---											
			4730-484-8419	P70287	<06848> .PACKING NUT.....NOTE 4	12	EA		1	*	*	*			214A	18
			5330-037-9389	364786	<06848> .PACKING,PREFORMED.....NOTE 3	12	EA		1	*	*	*			214A	19
			2915-118-3951	P70280	<06848> .GASKET RPL-BY 2915-147-9312	12									214A	
P	F		2915-147-9312	394446	<06848> .GASKET RPLS-- 2915-118-3951	12	EA		1	8	19	38	454	*	214A	20
P	F		2915-307-5235	P70784	<06848> .LINK,CARBURETOR,THROTTLE....	12	EA		1	*	2	2	12	*	214A	21
					ATTACHING PARTS											
			5315-234-1856	MS24665-155	<96906> .PIN,COTTER.....	12	HD		2	*	*	*		*	214A	22
			5310-285-2177	AN320-3	<88044> .NUT,SLOTTED,HEXAGON...NOTE 4	12	HD		1	*	*	*		*	214A	23
P	F		5310-442-2486	P70225	<06848> .WASHER,FLAT.....NOTE 4	12	EA		7	*	*	*		*	214A	24
			5306-182-1898	AN3H11	<88044> .BOLT,MACHINE.....	12	HD		2	*	*	*		*	214A	25
P	F		5310-442-2486	P70225	<06848> .WASHER,FLAT.....NOTE 4	12	EA		2	*	*	*		*	214A	26
P	F		5310-442-2486	P70225	<06848> .WASHER,FLAT.....NOTE 4	12	EA		2	*	*	*		*	214A	27
P	F		5310-442-2486	P70225	<06848> .WASHER,FLAT.....NOTE 4	12	EA		2	*	*	*		*	214A	28
P	F		5310-147-9567	P19820	<06848> .WASHER,SPRING TENSION.NOTE 4	12	XX		2	*	*	*		*	214A	29
					---*---											
			2915-484-8380	P70224	<06848> .BEARING,SLEEVE.....NOTE 4	12	EA		2	*	*	*			214A	30
P	H		2915-307-5331	360397	<06848> .LINK ASSEMBLY,ACCELERATION..	12	EA		1	*	*	*		*	214A	31
					PUMP											
					ATTACHING PARTS											
			5315-234-1856	MS24665-155	<96906> .PIN,COTTER.....	12	HD		2	*	*	*		*	214A	32
			5310-285-2177	AN320-3	<88044> .NUT,SLOTTED,HEXAGON.....	12	HD		2	*	*	*		*	214A	33
			5310-149-9282	393194	<06848> .WASHER,FLAT.....NOTE 2	12	EA		2	*	*	*			214A	34
					NOTE 4											
			5306-182-2060	AN3H7A	<88044> .BOLT,MACHINE.....	12	HD		2	*	*	*		*	214A	35
					---*---											
AH	H			391226B	<06848> .ADAPTER ASSEMBLY,CARBURETOR.	12	EA		1						214A	36
					ATTACHING PARTS											
			5306-147-1908	392545	<06848> .BOLT,MACHINE.....NOTE 4	12	EA		7	*	*	*			214A	37
					---*---											
			2915-535-0235	394256	<06848> .GASKET,THROTTLE.....NOTE 3	12	EA		1	*	*	*			214A	38
P	C		2915-604-8359	391510-64	<06848> .VALVE ASSEMBLY,ELECTRIC.....	12	EA		1	2	2	3		*	214A	39
					PRIMER											
					ATTACHING PARTS											
			5310-877-5798	MS21044D3	<96906> .NUT,SELF-LOCKING,HEXAGON....	12	EA		6	*	*	*		*	214A	40
			5310-167-0818	AN960-10	<88044> .WASHER,FLAT.....	12	HD		6	*	*	*		*	214A	41
					---*---											
P	C		2915-335-5260	392782	<06848> .GASKET,PRESSURE REGULATOR...	12	EA		1	*	2	2		*	214A	42
					NOTE 4											

(1) SOURCE, MAINT AND REC CODE (a) SOURCE CODE	(b) MAINT LEVEL	(c) REC CODE	(2) FEDERAL STOCK NUMBER	REFERENCE NUMBER		(3) DESCRIPTION	MODELS USABLE ON CH-34C	(4) UNIT OF ISSUE	(5) QTY INC IN UNIT PACK	(6) QTY INC IN UNIT	(7) 30-DAY DS GS MAINT ALW (a) 1-20	(b) 21-50	(c) 51-100	(8) 1-YR ALW PER 100 EQUIP CNTGCY	(9) DEPOT MAINT ALW PER 100 EQUIP	(10) ILLUSTRATION (a) FIG NO	(b) ITEM NO
			2915-307-5348	360694	<06848>	.BRACE,CARBURETOR.....NOTE 4	12	EA		1	*	*	*			214A	43
						ATTACHING PARTS											
			5310-857-4958	MS21044D5	<96906>	.NUT,SELF-LOCKING,HEXAGON....	12	EA		2	*	*	*		*	214A	44
			5330-544-2919	P16708	<06848>	.WASHER.....NOTE 4	12	EA		2	*	*	*			214A	45
						---*---											
			2915-329-9205	P70781	<06848>	.BRACE,CARBURETOR THROTTLE... NOTE 4	12	EA		1	*	*	*			214A	46
						ATTACHING PARTS											
			5310-857-4958	MS21044D5	<96906>	.NUT,SELF-LOCKING,HEXAGON....	12	EA		2	*	*	*		*	214A	47
			5330-544-2919	P16708	<06848>	.WASHER.....NOTE 4	12	EA		2	*	*	*			214A	48
			5310-209-3052	P60541	<06848>	.WASHER,FLAT.....NOTE 4	12	EA		AR	*	*	*			214A	49
						---*---											
AH	H			391521A	<06848>	.REGULATOR ASSEMBLY,PRESSURE.	12	EA		1						214A	49A
				391523A	<06848>	.BODY ASSEMBLY,THROTTLE.....	12	EA		1						214A	49B
						ATTACHING PARTS											
			5310-857-4960	MS21044D4	<96906>	.NUT,SELF-LOCKING,HEXAGON....	12	EA		7	*	*	*		*	214A	50
			5310-903-8282	MS21083N4	<96906>	.NUT,SELF-LOCKING,HEXAGON....	12	EA		1	*	*	*		*	214A	
			5310-141-1795	AN960-416	<88044>	.WASHER,FLAT.....	12	HD		1	*	*	*		*	214A	51
						---*---											
			2915-310-3526	P70349	<06848>	.GASKET,REGULATOR AND..... THROTTLE BODY NOTE 3	12	EA		1	*	*	*			214A	52
			2915-775-0580	391522A	<06848>	.CONTROL ASSEMBLY OBS-BY.... P/N 391832	12									214A	
X1				391832	<06848>	.CONTROL ASSEMBLY,FUEL..... OBSLTS 2915-775-0580	12	EA		1						214A	53
						ATTACHING PARTS											
			5310-857-4960	MS21044D4	<96906>	.NUT,SELF-LOCKING,HEXAGON....	12	EA		1	*	*	*		*	214A	54
			5310-141-1795	AN960-416	<88044>	.WASHER,FLAT.....	12	HD		1	*	*	*		*	214A	55
			5310-857-4960	MS21044D4	<96906>	.NUT,SELF-LOCKING,HEXAGON....	12	EA		1	*	*	*		*	214A	56
			5310-141-1795	AN960-416	<88044>	.WASHER,FLAT.....	12	HD		1	*	*	*		*	214A	57
			5310-857-4960	MS21044D4	<96906>	.NUT,SELF-LOCKING,HEXAGON....	12	EA		1	*	*	*		*	214A	58
			5310-141-1795	AN960-416	<88044>	.WASHER,FLAT.....	12	HD		1	*	*	*		*	214A	59
			5310-857-4960	MS21044D4	<96906>	.NUT,SELF-LOCKING,HEXAGON....	12	EA		2	*	*	*		*	214A	60
			5310-141-1795	AN960-416	<88044>	.WASHER,FLAT.....	12	HD		2	*	*	*		*	214A	61
						---*---											
			2915-310-3528	P70495	<06848>	.GASKET.....NOTE 3	12	EA		1	*	*	*			214A	62
			2915-314-9497	P70227	<06848>	.GASKET,REGULATOR AND FUEL... CONTROL BODY-LOWER NOTE 3	12	EA		1	*	*	*			214A	63
AH	H			391539-28-1	<06848>	.CONTROL ASSEMBLY,AUTOMATIC.. MIXTURE	12	EA		1						214A	
			5340-656-3168	328617	<06848>	..SEAL.....NOTE 3 NOTE 5	12	EA		1	*	*	*			214A	
P	F		5330-442-1937	P22149	<06848>	..PACKING,PREFORMED....NOTE 3 NOTE 5	12	EA		1	*	*	*		*	214A	66
P	H		2915-041-0328	365393	<06848>	..BODY ASSEMBLY,AUTOMATIC.... MIXTURE CONTROL	12	EA		1	*	*	*		*	214A	67
P	H		2915-484-9883	363807	<06848>	...BEARING,SLEEVE.....	12	EA		1	*	*	*		*	214A	68
			2915-485-1441	399226	<06848>	...BUSHING,AUTOMATIC..... MIXTURE CONTROL NOTE 3 NOTE 5	12	EA		1	*	*	*			214A	69
						...BODY AND BUSHING ASSEMBLY.	12	EA		1						214A	70
				392737	<06848>	..WASHER,NONMETALLIC...NOTE 3	12	EA		1						214A	71

(1) SOURCE, MAINT AND REC CODE (a) SOURCE CODE	(b) MAINT LEVEL	(c) REC CODE	(2) FEDERAL STOCK NUMBER	(3) DESCRIPTION REFERENCE NUMBER			MODELS USABLE ON CH-34C	(4) UNIT OF ISSUE	(5) QTY INC IN UNIT PACK	(6) QTY INC IN UNIT	(7) 30-DAY DS/GS MAINT ALW (a) 1-20	(b) 21-50	(c) 51-100	(8) 1-YR ALW PER 100 EQUIP CNTGCY	(9) DEPOT MAINT ALW PER 100 EQUIP	(10) ILLUSTRATION (a) FIG NO	(b) ITEM NO
						CONTINUED NOTE 5										214A	71
			2915-314-9495	P22151	<06848>	..SCREEN,AUTOMATIC MIXTURE... CONTROL HOUSING NOTE 3 NOTE 5	12	EA		1	*	*	*			214A	72
			5310-149-9245	P60129	<06848>	..NUT,PLAIN,ROUND.....NOTE 3 NOTE 5	12	EA		1	*	*	*			214A	73
P	H		2915-442-3303	360699	<06848>	..NEEDLE,AUTOMATIC MIXTURE... ATTACHING PARTS	12	EA		1	*	*	*		*	214A	74
			5340-529-6923	360530	<06848>	..RING,RETAINING.....NOTE 3 NOTE 5	12	EA		1	*	*	*			214A	75
				399224	<06848>	..WASHER.....NOTE 3 NOTE 5	12	EA		1						214A	76
				399223	<06848>	..WASHER.....NOTE 3 NOTE 5	12	EA		1						214A	77
						---*---											
			2915-307-5158	P61250	<06848>	..PLUNGER,VALVE,CARBURETOR... NOTE 3 NOTE 5	12	EA		1	*	*	*			214A	78
			2915-235-0676	399232	<06848>	..SPRING,HELICAL,COMPRESSION. NOTE 3 NOTE 5		EA		1	*	*	*			214A	79
P	H		2915-098-3932	365893	<06848>	..BELLOWS ASSEMBLY,..... ATMOSPHERIC PRESSURE SENSING ATTACHING PARTS	12	EA		1	*	*	*		*	214A	80
			5310-146-6497	P22148	<06848>	..NUT,PLAIN,HEXAGON....NOTE 3 NOTE 5	12	EA		1	*	*	*			214A	81
						---*---											
P	H		2915-035-5083	365694	<06848>	..HOUSING,AUTOMATIC MIXTURE.. CONTROL	12	EA		1	*	*	*		*	214A	82
AH	H			391226B	<06848>	.ADAPTER ASSEMBLY,CARBURETOR.	12	EA		1						214A	
			2915-265-0863	365180	<06848>	..PLATE,IDENTIFICATION..... SERVICE REPLACEMENT FOR PN P70000 NOTE 4 ATTACHING PARTS	12	EA		1	*	*	*			214A	83
			5305-753-7077	MS24621-2	<96906>	..SCREW,TAPPING,THREAD..... FORMING	12	HD		2	*	*	*		*	214A	84
						---*---											
			4730-188-3509	MS20913-1	<96906>	..PLUG,PIPE.....NOTE 2	12	EA		1	REF	REF	REF		*	214A	85
			4730-188-3509	MS20913-1	<96906>	..PLUG,PIPE.....NOTE 2	12	EA		1	REF	REF	REF		*	214A	86
			4730-188-3509	MS20913-1	<96906>	..PLUG,PIPE.....NOTE 2	12	EA		1	REF	REF	REF		*	214A	87
			4730-188-3509	MS20913-1	<96906>	..PLUG,PIPE.....NOTE 2	12	EA		1	REF	REF	REF		*	214A	88
			4730-188-3515	MS20913-4	<96906>	..PLUG,PIPE.....NOTE 4	12	EA		1	*	*	*		*	214A	89
			4730-188-3513	MS20913-2	<96906>	..PLUG,PIPE.....NOTE 4	12	EA		1	*	*	*		*	214A	90
			4730-188-3513	MS20913-2	<96906>	..PLUG,PIPE.....NOTE 4	12	EA		1	*	*	*		*	214A	91
			4730-484-9391	360420	<06848>	..PLUG,PIPE.....NOTE 4	12	EA		2	*	*	*			214A	92
				360421	<06848>	..GASKET.....NOTE 3	12	EA		2						214A	93
			2915-485-0672	393646	<06848>	..PLUG,TAPER SEAT..... NOTE 4	12	EA		1						214A	94
			4730-484-9342	360186	<06848>	..PLUG,HEXAGON.....NOTE 4	12	EA		1	*	*	*			214A	95
			5310-286-9677	399999	<06848>	..WASHER,FLAT.....NOTE 3	12	EA		1	*	*	*			214A	96

(1) SOURCE, MAINT AND REC CODE (a) SOURCE CODE	(b) MAINT LEVEL	(c) REC CODE	(2) FEDERAL STOCK NUMBER	REFERENCE NUMBER		(3) DESCRIPTION	MODELS USABLE ON CH-34C	(4) UNIT OF ISSUE	(5) QTY INC IN UNIT PACK	(6) QTY INC IN UNIT	(7) 30-DAY DS/GS MAINT ALW (a) 1-20	(b) 21-50	(c) 51-100	(8) 1-YR ALW PER 100 EQUIP CNTGCY	(9) DEPOT MAINT ALW PER 100 EQUIP	(10) ILLUSTRATION (a) FIG NO	(b) ITEM NO
P	H		2915-202-5626	394276	<06848>	..VALVE,CHECK.....	12	EA		1	*	*	*		*	214A	97
				AN73A17	<88044>	..BOLT,MACHINE.....NOTE 4	12	EA		5						214A	98
			5310-167-0818	AN960-10	<88044>	..WASHER,FLAT.....	12	HD		1	*	*	*		*	214A	99
			5305-146-9040	393946	<06848>	..SCREW,MACHINE.....NOTE 4	12	EA		1	*	*	*			214A	100
			5310-167-0818	AN960-10	<88044>	..WASHER,FLAT.....	12	HD		1	*	*	*		*	214A	102
P	H		2915-484-9377	360388	<06848>	..LEVER AND SHAFT ASSEMBLY,... ACCELERATION PUMP ATTACHING PARTS	12	EA		1	*	*	*		*	214A	103
P	H		2915-484-8316	P70150	<06848>	..PIN,IDLE LEVER TAPER..... SETSCREW	12	EA		1	*	*	*		*	214A	104
						---*---											
P	H		5315-484-7672	P14577	<06848>	...PIN,TAPERED,PLAIN.....	12	EA		1	*	*	*		*	214A	105
			5315-484-7673	P14577-1	<06848>	...PIN,TAPERED,PLAIN-..... 0.005 IN.OVERSIZE NOTE 4	12	EA		AR	*	*	*			214A	
XI				393688	<06848>	...SHAFT,ACCELERATING PUMP...	12	EA		1						214A	106
XI				360390	<06848>	...LEVER ASSEMBLY,..... ACCELERATING PUMP	12	EA		1						214A	107
			5305-271-7778	AN503-8-10	<88044>	....SCREW,MACHINE.....	12	HD		1	*	*	*		*	214A	108
			5310-167-0662	MS35337-43	<96906>	....WASHER,LOCK.....NOTE 3	12	HD		1	*	*	*		*	214A	109
XI				360389	<06848>	....LEVER,ACCELERATION PUMP..	12	EA		1						214A	110
			5330-599-0878	364454	<06848>	..PACKING,PREFORMED....NOTE 3	12	EA		1	*	*	*			214A	111
			5310-485-0758	394227	<06848>	..WASHER,RECESSED.....NOTE 4	12	EA		1	*	*	*			214A	112
			2915-233-2179	394226	<06848>	..SPRING,IDLE NEEDLE..... LINKAGE NOTE 4	12	EA		1	*	*	*			214A	113
			4730-147-2021	394229	<06848>	..NUT,PACKING.....NOTE 4	12	EA		1	*	*	*			214A	114
P	H		2915-322-2478	396339	<06848>	..LEVER.....	12	EA		1	*	*	*		*	214A	115
			5305-942-8431	MS35275-245	<96906>	...SCREW,MACHINE.....	12			1	*	*	*		*	214A	116
P	H		5310-167-4451	P22198	<06848>	...WASHER,FLAT.....NOTE 4	12	EA		1	*	*	*		*	214A	117
			2915-307-5578	394291	<06840>	...RING,PISTON.....NOTE 4	12	EA		2	*	*	*			214A	118
						...PISTON ASSEMBLY.....	12	EA		1						214A	119
P	H		2915-307-5560	393703	<06848>	..COVER,PUMP-ACCELERATING....	12	EA		1	*	*	*		*	214A	120
			5315-828-5486	MS35671-16	<96906>	...PIN,GROOVED,HEADLESS.....	12	EA		2	*	*	*		*	214A	121
			2915-097-4640	396369	<06848>	...BUSHING,PUMP COVER..NOTE 4	12	EA		1	*	*	*			214A	122
			5330-297-9908	368343	<06848>	...PACKING,PREFORMED...NOTE 3	12	EA		1	*	*	*			214A	123
P	H		2915-293-4684	393940	<06848>	...BUSHING SLEEVE.....	12	EA		1	*	*	*		*	214A	124
P	H		2915-328-1224	393941	<06848>	...BUSHING,PLAIN STEPPED..... 0.003 IN.OVERSIZE	12	EA		AR	*	*	*		*	214A	
P	H		2915-524-4452	393942	<06848>	...BUSHING,CARBURETOR-0.006.. IN.OVERSIZE	12	EA		AR	*	*	*		*	214A	
XI				393704	<06848>	...COVER,ACCELERATION PUMP...	12	EA		1						214A	125
			2915-442-4692	393675	<06848>	..GASKET,COVER.....NOTE 3	12	EA		1	*	*	*			214A	126
P	H		2915-485-1188	397648	<06848>	..VALVE,CHECK.....	12	EA		1	*	*	*		*	214A	127
			5330-290-1483	P2885	<06848>	..WASHER,NONMETALLIC...NOTE 3	12	EA		1	*	*	*			214A	128
P	H		2915-307-5592	394489	<78610>	..REINFORCING PLATE,..... DIAPHRAGM ATTACHING PARTS	12	EA		1	*	*	*		*	214A	129
			5305-942-8431	MS35275-245	<96906>	..SCREW,MACHINE.....	12			6	*	*	*		*	214A	130
						---*---											
			2915-147-9309	394274	<06848>	..GASKET.....NOTE 3	12	EA		1	*	*	*			214A	131
			2915-485-0697	393728	<06848>	..GASKET,ACCELERATION PUMP... NOTE 3	12	EA		1	*	*	*			214A	132

(1) SOURCE, MAINT AND REC CODE (a) SOURCE CODE	(b) MAINT LEVEL	(c) REC CODE	(2) FEDERAL STOCK NUMBER	REFERENCE NUMBER	(3) DESCRIPTION	MODELS USABLE ON CH-34C	(4) UNIT OF ISSUE	(5) QTY INC IN UNIT PACK	(6) QTY INC IN UNIT	(7) 30-DAY DS/GS MAINT ALW (a) 1-20	(b) 21-50	(c) 51-100	(8) 1-YR ALW PER 100 EQUIP CNTGCY	(9) DEPOT MAINT ALW PER 100 EQUIP	(10) ILLUSTRATION (a) FIG NO	(b) ITEM NO
P	H		2915-307-5644	396575 <06848>	..BODY ASSEMBLY,..... ACCELERATION PUMP	12	EA		1	*	*	*		*	214A	133
P	H		2915-485-1590	399861 <06848>	...BEARING,SLEEVE-0.003 IN... OVERSIZE	12	EA		AR	*	*	*		*	214A	134
P	H		2915-293-4529	399862 <06848>	...BEARING,SLEEVE-0.006 IN... OVERSIZE	12	EA		AR	*	*	*		*	214A	
X1				396574 <06848>	...BODY,ACCELERATION PUMP....	12	EA		1						214A	135
P	H		2915-307-5191	P70403 <06848>	..COVER,ACCESS HOLE SPRAY.... ATTACHING PARTS	12	EA		1	*	*	*		*	214A	136
			5305-148-6346	P70790 <06848>	..SCREW,MACHINE.....NOTE 4	12	EA		4	*	*	*			214A	137
			5310-167-0818	AN960-10 <88044>	..WASHER,FLAT..... ---*---	12	HD		4	*	*	*		*	214A	138
			2915-229-2874	360884 <06848>	..SPRING,DISCHARGE NOZZLE.... NOTE 4	12	EA		1	*	*	*			214A	139
AH	H			360880 <06848>	..VALVE ASSEMBLY,SPRAY..... NOZZLE GROUP	12	EA		1						214A	
AH	H			360882 <06848>	...VALVE ASSEMBLY,SPRAY..... NOZZLE	12	EA		1						214A	140
			5315-060-2409	MS24665-47 <96906>	....PIN,COTTER.....	12	HD		1	*	*	*		*	214A	141
			5310-147-2027	399256 <06848>	....NUT,SPECIAL.....NOTE 4	12	EA		1	*	*	*			214A	142
			2915-614-5527	399257 <06848>	....SPRING.....NOTE 4	12	EA		1	*	*	*			214A	143
			5310-484-8413	P70264 <06848>	....WASHER,CARBURETOR..NOTE 4	12	EA		1	*	*	*			214A	144
			2915-307-5595	394589 <06848>	....DIAPHRAGM.....NOTE 3	12	EA		1	*	*	*			214A	145
			2915-511-9122	P70795 <06848>	....WASHER,SPRAY NOZZLE..... NOTE 4	12	EA		1	*	*	*			214A	146
			5330-256-4103	P70796 <06848>	....WASHER,NONMETALLIC.NOTE 3	12	EA		1	*	*	*			214A	147
P	H		2915-307-5357	360883 <06848>	....NEEDLE,VALVE,SPRAY NOZZLE	12	EA		1	*	*	*		*	214A	148
P	H		2915-307-5356	360881 <06848>	...SEAT ASSEMBLY,VALVE SPRAY.	12	EA		1	*	*	*		*	214A	149
P	H		2915-316-2098	P70854 <06848>	....BUSHING,NEEDLE SEAT.....	12	EA		1	*	*	*		*	214A	150
P	H		2915-485-1125	397311 <06848>	....BUSHING,FIRST-0.002 IN... OVERSIZE	12	EA		AR	*	*	*		*	214A	
P	H		2915-485-1126	397312 <06848>	....BUSHING,SECOND-0.004..... IN.OVERSIZE	12	EA		AR	*	*	*		*	214A	
X1				360879 <06848>	....SEAT,NEEDLE VALVE.....	12	EA		1						214A	151
P	H		2915-606-3709	366701 <06848>	..STRAINER,NOZZLE.....	12	EA		1	*	*	*		15	214A	
			2915-640-9144	P70416 <06848>	..GASKET.....NOTE 3	12	EA		1	*	*	*			214A	152
			2915-233-7906	P70401 <06848>	..GASKET.....NOTE 3	12	EA		1	*	*	*			214A	153
P	H		2915-307-5711	398642 <06848>	..NOZZLE,FUEL,CARBURETOR..... ATTACHING PARTS	12	EA		1	*	*	*		*	214A	154
			5305-145-7019	AN503-10-12 <88044>	..SCREW,MACHINE.....	12	HD		1	*	*	*		*	214A	155
			5310-511-9331	394627 <06848>	..WASHER.....NOTE 4	12	EA		1	*	*	*			214A	156
			5305-145-7019	AN503-10-12 <88044>	..SCREW,MACHINE.....	12	HD		1	*	*	*		*	214A	157
			5310-511-9331	394627 <06848>	..WASHER.....NOTE 4 ---*---	12	EA		1	*	*	*			214A	158
			2915-147-6137	P70772 <06848>	..GASKET.....NOTE 3	12	EA		1	*	*	*			214A	159
P	H		2915-506-3374	364211 <06848>	..BODY ASSEMBLY,ADAPTER.....	12	EA		AR	*	*	*		*	214A	160
			5315-616-5727	398653 <06848>	...PIN,GROOVED,HEADLESS..... NOTE 4	12	EA		1	*	*	*			214A	161
P	H		2915-485-1587	399851 <06848>	...BUSHING,FUEL INLET.....	12	EA		1	*	*	*		*	214A	162
			2915-485-1243	397967 <06848>	...RING,SEAL.....NOTE 3	12	EA		1	*	*	*			214A	163
			2915-484-7871	P20109 <06848>	...BUSHING.....NOTE 4	12	EA		1	*	*	*			214A	164
			5315-850-4664	397469 <06848>	...PIN,TYPE 2.....NOTE 4	12	EA		4	*	*	*			214A	165

(1) SOURCE, MAINT AND REC CODE (a) SOURCE CODE	(b) MAINT LEVEL	(c) REC CODE	(2) FEDERAL STOCK NUMBER	REFERENCE NUMBER	(3) DESCRIPTION	MODELS USABLE ON CH-34C	(4) UNIT OF ISSUE	(5) QTY INC IN UNIT PACK	(6) QTY INC IN UNIT	(7) 30-DAY DS GS MAINT ALW (a) 1-20	(b) 21-50	(c) 51-100	(8) 1-YR ALW PER 100 EQUIP CNTGCY	(9) DEPOT MAINT ALW PER 100 EQUIP	(10) ILLUSTRATION (a) FIG NO	(b) ITEM NO
P	H		4730-595-2858	364124	<06848> ...ADAPTER BUSHING.....	12	EA		2	*	*	*		*	214A	166
			5330-037-9691	398353	<06848> ...PACKING,PREFORMED...NOTE 3	12	EA		2	*	*	*			214A	167
P	H		2915-149-9395	P70328	<06848> ...BUSHING,SCREW.....	12	EA		2	*	*	*		*	214A	168
P	H		2915-149-9396	P70328-1	<06848> ...BUSHING,SCREW-0.003 IN.... OVERSIZE	12	EA		AR	*	*	*		*	214A	
P	H		2915-149-9397	P70328-2	<06848> ...BUSHING,SCREW-0.006 IN.... OVERSIZE	12	EA		AR	*	*	*		*	214A	
			5315-484-7927	P21410	<06848> ...PIN,STRAIGHT,HEADLESS..... NOTE 4	12	EA		1	*	*	*			214A	169
X1				364212	<06848> ...BODY,ADAPTER.....	12	EA		1						214A	170
P	F		2915-604-8359	391510-64	<06848> .VALVE ASSEMBLY,ELECTRIC..... PRIMER	12	EA		1	REF	REF	REF		*	214A	
			5935-147-5406	396134	<06848> ..COVER,ELECTRIC PRIMER..... VALVE CONNECTOR NOTE 3 NOTE 2	12	EA		1	*	*	*			214A	171
			2915-265-1067	365179	<06848> ..PLATE,IDENTIFICATION.NOTE 3 NOTE 2	12	EA		1	*	*	*			214A	172
					ATTACHING PARTS											
			5305-088-3543	MS24621	<96906> ..SCREW,TAPPING,THREAD.NOTE 3	12	GR		2	*	*	*		*	214A	173
					---*---											
			4730-188-3509	MS20913-1	<96906> ..PLUG,PIPE.....NOTE 2	12	EA		1	REF	REF	REF		*	214A	175
				P16179-64	<06848> ..REDUCER.....NOTE 3	12	EA		1						214A	176
			4730-188-3509	MS20913-1	<96906> ..PLUG,PIPE.....	12	EA		1	REF	REF	REF		*	214A	177
			5970-311-0889	393360	<06848> ..WASHER,ELECTRIC PRIMER..... INSULATOR NOTE 3 NOTE 2	12	EA		1	*	*	*			214A	178
P	H		2915-485-0576	393105	<06848> ..HOUSING ASSEMBLY,ELECTRIC.. PRIMER VALVE	12	EA		1	*	*	*		*	214A	179
					ATTACHING PARTS											
			5310-877-5798	MS21044D3	<96906> ..NUT,SELF-LOCKING,HEXAGON...	12	EA		1	*	*	*		*	214A	180
			5310-149-9282	393194	<06848> ..WASHER,FLAT.....NOTE 2 NOTE 4	12	EA		1	*	*	*			214A	181
					---*---											
			2915-485-0452	392767	<06848> ...INSULATION,ELECTRIC..... PRIMER VALVE NOTE 2 NOTE 3	12	EA		1	*	*	*			214A	182
P	H		2915-485-0820	394629	<06848> ...PIN AND CONTACT SPRING.... ASSEMBLY,ELECTRIC PRIMER VALVE	12	EA		1	*	*	*		*	214A	183
					ATTACHING PARTS											
			5305-146-9038	392766	<06848> ...SCREW,ELECTRIC PRIMER..... VALVE NOTE 2 NOTE 3	12	EA		1	*	*	*			214A	184
			2915-148-4727	392964	<06848> ...GASKET,ELECTRIC PRIMER.... VALVE NOTE 2 NOTE 3	12	EA		1	*	*	*			214A	185
			5970-148-4701	392765	<06848> ...INSULATOR,BEAD.....NOTE 2 NOTE 3	12	EA		1	*	*	*			214A	186
					---*---											
			5970-485-0450	392762	<06848> ...INSULATOR,ELECTRIC..... PRIMER VALVE NOTE 2 NOTE 3	12	EA		1	*	*	*			214A	187

(1) SOURCE, MAINT AND REC CODE (a) SOURCE CODE	(b) MAINT LEVEL	(c) REC CODE	(2) FEDERAL STOCK NUMBER	REFERENCE NUMBER	(3) DESCRIPTION	MODELS USABLE ON CH-34C	(4) UNIT OF ISSUE	(5) QTY INC IN UNIT PACK	(6) QTY INC IN UNIT	(7) 30-DAY DS/GS MAINT ALW (a) 1-20	(b) 21-50	(c) 51-100	(8) 1-YR ALW PER 100 EQUIP CNTGCY	(9) DEPOT MAINT ALW PER 100 EQUIP	(10) ILLUSTRATION (a) FIG NO	(b) ITEM NO
X1				393104 <06848>	...HOUSING,ELECTRIC PRIMER... VALVE	12	EA		1						214A	188
P	H		5945-484-9693	361453 <06848>	..SOLENOID ASSEMBLY-24 VOLTS.	12	EA		1	*	*	*		*	214A	189
			2915-593-5731	366199 <06848>	..SEAL.....NOTE 2 NOTE 3	12	EA		1	*	*	*			214A	190
P	H		2915-307-5513	392985 <06848>	..SEAT,VALVE,CARBURETOR..... NOTE 3	12	EA		1	*	*	*		*	214A	191
			2915-514-1729	392992 <06848>	..SPRING,ELECTRIC PRIMER..... NOTE 2 NOTE 3	12	EA		1	*	*	*			214A	192
			2915-694-9188	366193 <06848>	..VALVE ASSEMBLY,ELECTRIC.... PRIMER NOTE 2 NOTE 3	12	EA		1	*	*	*			214A	193
			5310-286-9673	398629 <06848>	..WASHER,FLAT.....NOTE 2 NOTE 3	12	EA		1	*	*	*			214A	194
P	H		2915-093-4022	365944 <06848>	..BASE ASSEMBLY,PRIMER VALVE.	12	EA		1	*	*	*		*	214A	195
X1				391832 <06848>	.CONTROL ASSEMBLY,FUEL.....	12	EA		1						214A	
			2915-265-0863	365180 <06848>	..PLATE,IDENTIFICATION.NOTE 4 ATTACHING PARTS	12	EA		1	*	*	*			214A	196
			5305-753-7077	MS24621-2 <96906>	..SCREW,TAPPING,THREAD..... FORMING	12	HD		2	*	*	*		*	214A	197
					---*---											
			5340-656-3168	328617 <06848>	..SEAL.....NOTE 3 NOTE 5	12	EA		1	*	*	*			214A	
			4730-188-3509	MS20913-1 <96906>	..PLUG,PIPE.....NOTE 2	12	EA		1	REF	REF	REF		*	214A	198
			4730-188-3509	MS20913-1 <96906>	..PLUG,PIPE.....NOTE 2	12	EA		1	REF	REF	REF		*	214A	199
			4730-485-0670	393644 <06840>	.PLUG,MACHINE THREAD...NOTE 4	12	EA		1	*	*	*			214A	200
			4730-188-3509	MS20913-1 <96906>	..PLUG,PIPE.....NOTE 2	12	EA		1	REF	REF	REF		*	214A	201
P	H		2915-307-5064	P19623-55 <06848>	..JET,METERED FUEL VENT..... CARBURETOR	12	EA		1	*	*	*		*	214A	202
			2915-485-0603	393399 <06848>	..PLUG,TAPER SEAT.....NOTE 4	12	EA		1	*	*	*			214A	203
			2915-442-4292	392502BLK <06848>	..JET,METERING.....NOTE 4	12	EA		1	*	*	*			214A	204
			2915-484-8172	P61195 <06848>	..PLUG,TAPER SEAT.....NOTE 4	12	EA		3	*	*	*			214A	205
P	H		2915-307-5213	P70607 <06848>	..COVER,VALVE,FUEL CONTROL... ATTACHING PARTS	12	EA		1	*	*	*		*	214A	206
			5310-877-5798	MS21044D3 <96906>	..NUT,SELF-LOCKING,HEXAGON...	12	EA		8	*	*	*		*	214A	207
			5310-167-0818	AN960-10 <88044>	..WASHER,FLAT.....	12	HD		8	*	*	*		*	214A	208
					---*---											
			2915-310-3586	393625 <06848>	..GASKET,JET COVER.....NOTE 3	12	EA		1	*	*	*			214A	209
P	H		2915-307-5115	P22244-2300 <06848>	..JET,CARBURETOR METERING....	12	EA		1	*	*	*		*	214A	210
P	H		2915-307-4973	393044-34 <06848>	..JET,METERING,CARBURETOR....	12	EA		1	*	*	*		*	214A	211
			2915-037-9052	P22244-3400 <06848>	..JET,METERING,TYPE C..NOTE 4	12	EA		1	*	*	*			214A	212
			5305-148-6343	P70563 <06848>	..SCREW,MACHINE.....NOTE 4	12	EA		1	*	*	*			214A	213
			5310-148-8835	P70065 <06848>	..NUT,HEXAGON.....NOTE 4	12	EA		1	*	*	*			214A	214
			5310-511-9300	392705 <06848>	..NUT,ENRICHMENT VALVE..... SPRING NOTE 4	12	EA		1	*	*	*			214A	215
			2915-233-2088	P70937 <06848>	..SPRING.....NOTE 4	12	EA		1	*	*	*			214A	216
P	H		2915-030-6795	365787 <06848>	..VALVE,ENRICHMENT.....	12	EA		1	*	*	*		*	214A	217
P	H		2915-310-6177	362133 <06848>	..SEAT,ENRICHMENT VALVE.....	12	EA		1	*	*	*		*	214A	218
			5330-246-5794	P5439 <06848>	..WASHER.....NOTE 3	12	EA		1	*	*	*			214A	219
P	H		2915-098-8859	364807 <06848>	..COVER,ECONOMIZER DIAPHRAGM. ATTACHING PARTS	12	EA		1	*	*	*		*	214A	220

(1) SOURCE, MAINT AND REC CODE (a) SOURCE CODE	(b) MAINT LEVEL	(c) REC CODE	(2) FEDERAL STOCK NUMBER	(3) DESCRIPTION REFERENCE NUMBER			MODELS USABLE ON CH-34C	(4) UNIT OF ISSUE	(5) QTY INC IN UNIT PACK	(6) QTY INC IN UNIT	(7) 30-DAY DS GS MAINT ALW (a) 1-20	(b) 21-50	(c) 51-100	(8) 1-YR ALW PER 100 EQUIP CNTGCY	(9) DEPOT MAINT ALW PER 100 EQUIP	(10) ILLUSTRATION (a) FIG NO	(b) ITEM NO
			5305-145-7018	AN503-10-10	<88044>	..SCREW,MACHINE.....	12	HD		8	*	*	*		*	214A	221
			5310-167-0818	AN960-10	<88044>	..WASHER,FLAT.....	12	HD		8	*	*	*		*	214A	222
						---*---											
			5330-263-4601	315S3	<06848>	..PACKING,PREFORMED....NOTE 3	12	EA		2	*	*	*			214A	223
P	H		5310-274-7947	365513	<06848>	..WASHER.....NOTE 4	12	EA		2	*	*	*		*	214A	224
				399178	<06848>	..DIAPHRAGM ASSEMBLY,..... CARBURETOR RPL-BY P/N 2630376	12									214A	
AH	H			2630376	<06848>	..DIAPHRAGM ASSEMBLY,..... ECONOMIZING VALVE GROUP RPLS-- P/N 399178	12	EA		1						214A	225
			5315-234-1856	MS24665-155	<96906>	...PIN,COTTER.....	12	HD		1	*	*	*		*	214A	226
			5310-207-9274	AN320C6	<88044>	...NUT,SLOTTED,HEXAGON.NOTE 4	12	EA		1	*	*	*		*	214A	227
			5330-290-1483	P2885	<06848>	...WASHER,NONMETALLIC..NOTE 3	12	EA		1	*	*	*			214A	228
			2915-314-9499	P70480	<06848>	...PLATE,DIAPHRAGM.....NOTE 4	12	EA		1	*	*	*			214A	229
			2915-307-5728	399177	<06848>	...DIAPHRAGM ASSEMBLY..NOTE 3	12	EA		1	*	*	*			214A	230
			2915-119-1494	P70478	<06848>	...PLATE,DIAPHRAGM.....NOTE 4	12	EA		1	*	*	*			214A	231
			5330-261-2896	398879	<06848>	...WASHER RPL-BY..... 5330-522-6514	12									214A	
P	H		5330-522-6514	O-2470	<75511>	...WASHER,NONMETALLIC..... RPLS-- 5330-261-2896	12	EA		1	*	*	*		*	214A	232
P	H		5340-202-6207	P70481	<06848>	...PLUG,MACHINE THREAD.....	12	EA		1	*	*	*		*	214A	233
			2915-316-2119	364794-56	<06848>	..JET,METERING.....NOTE 4	12	EA		1	*	*	*			214A	234
				365420	<06848>	..VALVE ASSEMBLY,ALTITUDE.... IDLE COMPENSATION	12									214A	
AH	H			Z626497	<06848>	..COMPENSATOR ASSEMBLY,IDLE.. VALVE RPLS-- PN 365420 ATTACHING PARTS	12	EA		1						214A	235
			5310-877-5798	MS21044D3	<96906>	..NUT,SELF-LOCKING,HEXAGON...	12	EA		5	*	*	*		*	214A	236
			5310-167-0818	AN960-10	<88044>	..WASHER,FLAT.....	12	HD		5	*	*	*		*	214A	237
						---*---											
			4730-188-3509	MS20913-1	<96906>	...PLUG,PIPE.....NOTE 2	12	EA		1	REF	REF	REF		*	214A	238
			5310-037-9348	363931	<06848>	...NUT,PLAIN CAP.....NOTE 4	12	EA		1	*	*	*			214A	239
			2915-531-2821	P6855	<06848>	...GASKET.....NOTE 3		EA		1	*	*	*			214A	240
			5310-596-8422	AN316-5R	<88044>	...NUT,PLAIN,HEXAGON...NOTE 4	12	HD		1	*	*	*		*	214A	241
			2915-531-2821	P6855	<06848>	...GASKET.....NOTE 3	12	EA		1	*	*	*			214A	242
P	H		2915-213-6768	363943	<06848>	...HOUSING,ALTITUDE..... COMPENSATING IDLER SYSTEM	12	EA		1	*	*	*		*	214A	243
P	F		5310-637-0123	362792	<06848>	...NUT,PLAIN,HEXAGON.....	12	EA		1	*	*	*		*	214A	244
			5330-037-9425	365264	<06848>	...WASHER,NONMETALLIC..NOTE 3	12	EA		1	*	*	*			214A	245
P	H		2915-031-7444	365470	<06848>	...NEEDLE,IDLE BY-PASS..... ATTACHING PARTS	12	EA		1	*	*	*		*	214A	246
			5340-265-9982	907666K1	<06848>	...RING,RETAINING.....NOTE 3	12	EA		1	*	*	*			214A	247
			5310-209-5749	363942	<06848>	...WASHER,FLAT.....NOTE 4	12	EA		1	*	*	*			214A	248
						---*---											
			2915-213-6767	363939	<06848>	...SLEEVE,BY-PASS.....NOTE 3	12	EA		1	*	*	*			214A	249
			2915-200-9733	363941	<06848>	...SPRING,HELICAL COMPRESSION RPL-BY 2915-974-8157	12									214A	
P	H		2915-974-8157	367480	<06848>	...SPRING,HELICAL,COMPRESSION	12	EA		1	*	*	*		*	214A	250

(1) SOURCE, MAINT AND REC CODE (a) SOURCE CODE	(b) MAINT LEVEL	(c) REC CODE	(2) FEDERAL STOCK NUMBER	REFERENCE NUMBER	(3) DESCRIPTION	MODELS USABLE ON CH-34C	(4) UNIT OF ISSUE	(5) QTY INC IN UNIT PACK	(6) QTY INC IN UNIT	(7) 30 DAY DS/GS MAINT ALW (a) 1-20	(b) 21-50	(c) 51-100	(8) 1-YR ALW PER 100 EQUIP CNTGCY	(9) DEPOT MAINT ALW PER 100 EQUIP	(10) ILLUSTRATION (a) FIG NO	(b) ITEM NO
					CONTINUED										214A	250
					RPLS-- 2915-200-9733											
P	H		2915-800-2985	367530 <06848>	...BELLOWS ASSEMBLY RPLS--..	12	EA		1	*	2	2		*	214A	251
					2915-041-0323											
P	H		2915-304-5661	365270 <06848>	...BUSHING ASSEMBLY.....	12	EA		1	*	*	*		*	214A	252
					COMPENSATOR											
P	H		2915-819-9573	364790 <06848>	....BUSHING,SLEEVE.....	12	EA		1	*	*	*		*	214A	
X1				365263 <06848>	....BUSHING.....	12	EA		1						214A	
			5330-515-5145	398535 <06848>	...PACKING,PREFORMED...NOTE 3	12	EA		1	*	*	*			214A	253
			5330-599-2239	364846 <06848>	...PACKING,PREFORMED...NOTE 3	12	EA		1	*	*	*			214A	
			5330-037-9425	365264 <06848>	...WASHER,NONMETALLIC..NOTE 3	12	EA		1	*	*	*			214A	254
P	H		2915-304-5662	365272 <06848>	...COVER ASSEMBLY,IDLE VALVE.	12	EA		1	*	*	*		*	214A	255
			2915-335-7073	362406 <06848>	....BUSHING.....NOTE 4	12	EA		1	*	*	*			214A	256
X1				364996 <06848>	....COVER,IDLE VALVE.....	12	EA		1						214A	257
			2915-370-9913	364963 <06848>	..GASKET.....NOTE 3	12	EA		1	*	*	*			214A	258
			2915-485-1187	397645 <06848>	..SPRING AND PLATE ASSEMBLY..	12	EA		1	*	*	*			214A	259
					NOTE 4											
			5315-234-1856	MS24665-155 <96906>	..PIN,COTTER.....	12	HD		1	*	*	*		*	214A	260
			5310-167-1285	AN310-4 <88044>	..NUT,CASTELLATED,HEXAGON....	12	HD		1	*	*	*		*	214A	261
			5310-141-1795	AN960-416 <88044>	..WASHER,FLAT.....NOTE 4	12	HD		1	*	*	*		*	214A	262
AH	H			366625 <06848>	..LEVER AND STEM ASSEMBLY,...	12	EA		1						214A	263
					IDLE VALVE											
P	H		2915-620-2140	366456 <06848>	...LEVER ASSEMBLY,IDLE.....	12	EA		1	*	*	*		*	214A	264
					VALVE INSIDE											
					ATTACHING PARTS											
P	H		2915-484-8316	P70150 <06848>	...PIN,IDLE LEVER TAPER.....	12	EA		1	*	*	*		*	214A	265
					SETSCREW											
					---*---											
			5305-942-8431	MS35275-245 <96906>	....SCREW,MACHINE.....NOTE 4	12			1	*	*	*		*	214A	266
P	H		5310-167-4451	P22198 <06848>	....WASHER,FLAT.....NOTE 4	12	EA		1	*	*	*		*	214A	267
X1				366460 <06848>	....LEVER,IDLE VALVE INSIDE..	12	EA		1						214A	268
P	H		2915-307-5516	393034 <06848>	...ARM AND SHAFT ASSEMBLY....	12	EA		1	*	*	*		*	214A	269
X1				393035 <06848>	....SHAFT,IDLE CUTOFF.....	12	EA		1						214A	270
					ATTACHING PARTS											
			5305-145-7018	AN503-10-10 <88044>	....SCREW,MACHINE.....	12	HD		1	*	*	*		*	214A	271
P	H		5315-442-3838	363860 <06848>	....PIN,TAPERED,PLAIN.....	12	EA		1	*	*	*		*	214A	272
			5315-151-7757	364131 <06848>	....PIN,TAPERED,PLAIN-0.005..	12	HD		AR	*	*	*			214A	
					IN.OVERSIZE NOTE 4											
P	H		5315-151-7758	364132 <06848>	....PIN,TAPERED,PLAIN-0.010..	12	EA		AR	*	*	*		*	214A	
					IN.OVERSIZE NOTE 4											
					---*---											
P	F		2915-485-0533	393037 <06848>	....SPRING,IDLE ADJUSTING....	12	EA		1	*	*	*		*	214A	273
					NOTE 4											
			5305-148-6344	P70629 <06848>	....SCREW,MACHINE.....NOTE 4	12	EA		1	*	*	*			214A	274
			5310-167-0662	MS35337-43 <96906>	....WASHER,LOCK.....	12	HD		1	*	*	*		*	214A	275
P	H		2915-307-5220	P70686 <06848>	....SCREW ASSEMBLY,IDLE.....	12	EA		1	*	*	*		*	214A	276
					ADJUSTING											
			2915-484-8554	P70685 <06848>	.....BEARING,SLEEVE....NOTE 4	12	EA		1	*	*	*			214A	277
X1				P70684 <06848>	.....BOLT,EYE.....	12	EA		1						214A	278
P	H		5315-442-2677	P70683 <06848>	....PIN,STRAIGHT,HEADLESS....	12	EA		1	*	*	*		*	214A	279
P	H		5315-149-4282	P18631 <06848>	....PIN,STRAIGHT,HEADLESS....	12	EA		1	*	*	*		*	214A	280
P	H		2915-442-2675	P70680 <06848>	....INDICATOR,IDLE.....	12	EA		1	*	*	*		*	214A	281

(1) SOURCE, MAINT AND REC CODE (a) SOURCE CODE	(b) MAINT LEVEL	(c) REC CODE	(2) FEDERAL STOCK NUMBER	REFERENCE NUMBER	(3) DESCRIPTION	MODELS USABLE ON CH-34C	(4) UNIT OF ISSUE	(5) QTY INC IN UNIT PACK	(6) QTY INC IN UNIT	(7) 30-DAY DS GS MAINT ALW (a) 1-20	(b) 21-50	(c) 51-100	(8) 1-YR ALW PER 100 EQUIP CNTGCY	(9) DEPOT MAINT ALW PER 100 EQUIP	(10) ILLUSTRATION (a) FIG NO	(b) ITEM NO
					CONTINUED										214A	281
					ADJUSTING											
X1				P70681 <06848>	....BUSHING,IDLE ADJUSTING...	12	EA		1						214A	282
					WHEN EXHTD RQTN NHA											
					2915-307-5516											
X1				393036 <06848>	....LEVER,IDLE ADJUSTING.....	12	EA		1						214A	283
			5330-599-0878	364454 <06848>	..PACKING,PREFORMED....NOTE 3	12	EA		1	*	*	*			214A	284
			5310-485-0758	394227 <06848>	..WASHER,RECESSED.....NOTE 4	12	EA		1	*	*	*			214A	285
			2915-233-2179	394226 <06848>	..SPRING,HELICAL,COMPRESSION.	12	EA		1	*	*	*			214A	286
					NOTE 4											
			4730-147-2021	394229 <06848>	..NUT,IDLE NEEDLE LINKAGE....	12	EA		1	*	*	*			214A	287
					PACKING NOTE 4											
P	H		2915-093-4024	365948 <06848>	..VALVE ASSEMBLY.....	12	EA		1	*	*	*		*	214A	288
					ATTACHING PARTS											
			5305-942-8431	MS35275-245 <96906>	..SCREW,MACHINE.....	12			2	*	*	*		*	214A	289
			5310-511-9417	394944 <06848>	..WASHER,SPECIAL.....NOTE 3	12	EA		2	*	*	*			214A	290
					---*---											
P	H		5315-619-2961	366470 <06848>	...PIN,STRAIGHT,HEADED.....	12	EA		1	*	*	*		*	214A	291
P	H		5315-619-2959	366471 <06848>	...PIN,STRAIGHT,HEADED.....	12	EA		AR	*	*	*		*	214A	
P	H		5315-619-2960	366472 <06848>	...PIN,STRAIGHT,HEADED.....	12	EA		AR	*	*	*		*	214A	
X1				P70203 <06848>	...VALVE,IDLE.....	12	EA		1						214A	292
X1				P70725 <06848>	...BUSHING,IDLE VALVE.....	12	EA		1						214A	293
			5330-298-0445	P70144 <06848>	..PACKING,PREFORMED....NOTE 3	12	EA		1	*	*	*			214A	294
			2915-307-5275	P9201-70 <06848>	..JET,METERING.....NOTE 4	12	EA		1	*	*	*			214A	295
P	F		2915-307-4992	P13675 <06848>	..ARM,ACTUATING,MIXTURE.....	12	EA		1	*	*	*		*	214A	296
					CONTROL											
					ATTACHING PARTS											
			5315-234-1856	MS24665-155 <96906>	..PIN,COTTER.....	12	HD		1	*	*	*		*	214A	297
			5310-167-1286	AN310-5 <88044>	..NUT,CASTELLATED,HEXAGON....	12	HD		1	*	*	*		*	214A	298
					NOTE 4											
					---*---											
P	F		2915-888-9545	2626479 <06848>	..COVER ASSEMBLY,MIXTURE.....	12	EA		1	*	2	2		*	214A	299
					CONTROL COMPLETE											
					ATTACHING PARTS											
			5305-145-7018	AN503-10-10 <88044>	..SCREW,MACHINE.....	12	HD		6	*	*	*		*	214A	300
			5310-167-0818	AN960-10 <88044>	..WASHER,FLAT.....	12	HD		6	*	*	*		*	214A	301
					---*---											
P	F		5315-350-7274	P19086-1 <06848>	...PIN,TAPERED,PLAIN-0.005...	12	EA		AR	*	*	*		*	214A	302
					IN.OVERSIZE NOTE 4											
			5315-212-8687	P19086-2 <06848>	...PIN,TAPERED,PLAIN-0.010...	12	EA		AR	*	*	*			214A	
					IN.OVERSIZE NOTE 4											
P	H		2915-307-5328	360383 <06848>	...COVER ASSEMBLY-VALVE.....	12	EA		1	*	*	*		*	214A	303
					BODY											
P	H		2915-484-8493	P70536 <06848>	....PIN,MIXTURE CONTROL.....	12	EA		2	*	*	*		*	214A	304
P	H		2915-484-8494	P70536-1 <06848>	....PIN,MIXTURE CONTROL.....	12	EA		AR	*	*	*		*	214A	
					LATCH-0.002 IN.OVERSIZE											
P	H		2915-484-8495	P70536-2 <06848>	....PIN,MIXTURE CONTROL.....	12	EA		AR	*	*	*		*	214A	
					LATCH-0.004 IN.OVERSIZE											
X1				360384 <06848>	....COVER,MIXTURE CONTROL....	12	EA		1						214A	305
			2915-484-8490	P70528 <06848>	...SPRING,HELICAL,COMPRESSION	12	EA		1	*	*	*			214A	306
					NOTE 4											
X1				394064 <06848>	...LOCKPLATE,LATCH AND STEM..	12	EA		1						214A	307

(1) SOURCE, MAINT AND REC CODE (a) SOURCE CODE	(b) MAINT LEVEL	(c) RECOV CODE	(2) FEDERAL STOCK NUMBER	REFERENCE NUMBER	(3) DESCRIPTION	MODELS USABLE ON CH-34C	(4) UNIT OF ISSUE	(5) QTY INC IN UNIT PACK	(6) QTY INC IN UNIT	(7) 30 DAY DSGS MAINT ALW (a) 1-20	(b) 21-50	(c) 51-100	(8) 1-YR ALW PER 100 EQUIP CNTGCY	(9) DEPOT MAINT ALW PER 100 EQUIP	(10) ILLUSTRATION (a) FIG NO	(b) ITEM NO
					CONTINUED NOTE 4										214A	307
			2915-307-5571	394065 <06848>	...LOCKPLATE,LATCH AND STEM.. NOTE 4	12	EA		1	*	*	*			214A	308
				367020 <06848>	...PLATE U/W PN 367019..... NOTE 4	12	EA		1						214A	
			5330-442-2590	P70514 <06848>	...WASHER,NONMETALLIC..NOTE 3	12	EA		1	*	*	*			214A	309
				367019 <06848>	...WASHER U/W PN 367020..... NOTE 4	12	EA		1						214A	
P	H		2915-035-5072	365424 <06848>	...COVER ASSEMBLY,MIXTURE.... CONTROL	12	EA		1	*	*	*		*	214A	310
P	H		2915-484-8167	P61144 <06848>	....PIN,MIXTURE CONTROL.....	12	EA		2	*	*	*		*	214A	311
P	H		2915-484-8168	P61144-1 <06848>	....PIN,MIXTURE CONTROL..... 0.002 IN.OVERSIZE	12	EA		AR	*	*	*		*	214A	
P	H		2915-484-8169	P61144-2 <06848>	....PIN,MIXTURE CONTROL..... 0.004 IN.OVERSIZE	12	EA		AR	*	*	*		*	214A	
			5315-442-5106	396746 <06848>	....PIN,STRAIGHT,HEADLESS.... NOTE 4	12	EA		1	*	*	*			214A	312
P	H		2915-516-7793	P70518 <06848>	....BUSHING,SLEEVE.....	12	EA		1	*	*	*		*	214A	313
P	H		2915-149-9767	P70518-1 <06848>	....BUSHING,SLEEVE-0.003 IN.. OVERSIZE	12	EA		AR	*	*	*		*	214A	
X1				365397 <06848>	....COVER,MIXTURE CONTROL....	12	EA		1						214A	314
			5330-263-4587	31558 <06848>	...PACKING,PREFORMED...NOTE 4	12	EA		1	*	*	*			214A	315
			5310-524-4333	P70525 <06848>	...WASHER.....NOTE 4	12	EA		1	*	*	*			214A	316
P	H		2915-201-2093	365396 <06848>	...SPRING,HELICAL COMPRESSION NOTE 4	12	EA		1	*	*	*		*	214A	317
			5310-148-8885	393348 <06848>	...WASHER,FLAT.....NOTE 4	12	EA		1	*	*	*			214A	318
			2915-485-0596	393349 <06848>	...BUSHING,MIXTURE CONTROL... SHAFT NOTE 4	12	EA		1	*	*	*			214A	319
			5310-209-2708	365637 <06848>	...WASHER.....NOTE 4	12	EA		1	*	*	*			214A	320
X1				365638 <06848>	...STEM,MIXTURE CONTROL..... LATCH	12	EA		1						214A	321
			2915-310-3529	P70593 <06848>	..GASKET.....NOTE 3	12	EA		1	*	*	*			214A	322
			2915-243-4358	P70598 <06848>	..SPRING,HELICAL,COMPRESSION. NOTE 4	12	EA		1	*	*	*			214A	323
P	H		2915-307-5209	P70590 <06848>	..SHAFT,FUEL MIXTURE CONTROL.	12	EA		1	*	*	*		*	214A	324
			5330-037-9120	P70941 <06848>	..WASHER,NONMETALLIC...NOTE 3	12	EA		1	*	*	*			214A	325
P	H		2915-307-5668	397330 <06848>	..VALVE PLATE.....	12	EA		1	*	*	*		*	214A	326
P	H		2915-484-8516	P70579 <06848>	..PLUG,CONTROL ASSEMBLY.....	12	EA		1	*	*	*		*	214A	327
				398976 <06848>	...GASKET.....NOTE 3	12	EA		1						214A	328
P	H		2915-147-1795	P70582 <06848>	..VALVE ASSEMBLY.....	12	EA		1	*	*	*		*	214A	329
P	H		2915-307-5407	365458 <06848>	..BODY ASSEMBLY,FUEL CONTROL.	12	EA		1	*	*	*		*	214A	330
P	H		2915-307-5207	P70588 <06848>	...PLATE,MANUAL MIXTURE..... CONTROL VALVE LOWER ATTACHING PARTS	12	EA		1	*	*	*		*	214A	331
			5305-148-4279	P70728 <06848>	...SCREW,MACHINE.....NOTE 4 ---*---	12	EA		4	*	*	*			214A	332
			2915-310-3582	393506 <06848>	...GASKET.....NOTE 4	12	EA		1	*	*	*			214A	333
P	H		5307-149-4497	P70604-1 <06848>	...STUD,STEPPED-..... 0.003 IN.OVERSIZE	12	EA		AR	*	*	*		*	214A	334
P	H		5307-149-4498	P70604-2 <06848>	...STUD,STEPPED-..... 0.006 IN.OVERSIZE	12	EA		AR	*	*	*		*	214A	

(1) SOURCE, MAINT AND REC CODE (a) SOURCE CODE	(b) MAINT LEVEL	(c) REC CODE	(2) FEDERAL STOCK NUMBER	REFERENCE NUMBER	(3) DESCRIPTION	MODELS USABLE ON CH-34C	(4) UNIT OF ISSUE	(5) QTY INC IN UNIT PACK	(6) QTY INC IN UNIT	(7) 30-DAY DS/GS MAINT ALW (a) 1-20	(b) 21-50	(c) 51-100	(8) 1-YR ALW PER 100 EQUIP CNTGCY	(9) DEPOT MAINT ALW PER 100 EQUIP	(10) ILLUSTRATION (a) FIG NO	(b) ITEM NO
P	H		5307-533-9917	392830	<06848> ...STUD.....	12	EA		5	*	2	2		*	214A	335
P	H		5307-533-9918	392831	<06848> ...STUD-0.003 IN.OVERSIZE....	12	EA		AR	*	*	*		*	214A	
P	H		5307-533-9919	392832	<06848> ...STUD-0.006 IN.OVERSIZE....	12	EA		AR	*	*	*		*	214A	
P	H		5307-533-9877	P70191-2	<06848> ...STUD,PLAIN-..... 0.003 IN.OVERSIZE	12	EA		AR	*	*	*		*	214A	336
P	H		5307-638-2064	P70191-3	<06848> ...STUD,PLAIN-..... 0.006 IN.OVERSIZE	12	EA		AR	*	*	*		*	214A	
P	H		5307-208-0632	365281	<06848> ...STUD,STEPPED-..... 0.003 IN.OVERSIZE	12	EA		AR	*	*	*		*	214A	337
P	H		5307-298-4297	365282	<06848> ...STUD,STEPPED-..... 0.006 IN.OVERSIZE	12	EA		AR	*	*	*		*	214A	
P	H		5307-533-9917	392830	<06848> ...STUD.....	12	EA		2	*	REF	REF		*	214A	338
P	H		5307-533-9918	392831	<06848> ...STUD-0.003 IN.OVERSIZE....	12	EA		AR	*	*	*		*	214A	
P	H		5307-533-9919	392832	<06848> ...STUD-0.006 IN.OVERSIZE....	12	EA		AR	*	*	*		*	214A	
P	H		5307-151-7736	360371	<06848> ...STUD,STEPPED-..... 0.003 IN.OVERSIZE	12	EA		AR	*	*	*		*	214A	339
P	H		5307-149-9548	360372	<06848> ...STUD,STEPPED-..... 0.006 IN.OVERSIZE	12	EA		AR	*	*	*		*	214A	
P	H		5307-533-9862	P20506-2	<06848> ...STUD,PLAIN-..... 0.003 IN.OVERSIZE	12	EA		AR	*	*	*		*	214A	340
P	H		5307-298-3028	P20506-3	<06848> ...STUD,PLAIN-..... 0.006 IN.OVERSIZE	12	EA		AR	*	*	*		*	214A	
P	H		2915-293-4222	364831	<06848> ...BUSHING,SLEEVE-0.002 IN... OVERSIZE	12	EA		AR	*	*	*		*	214A	341
P	H		2915-288-3130	364832	<06848> ...BUSHING,SLEEVE-0.004 IN... OVERSIZE	12	EA		AR	*	*	*		*	214A	
P	H		2915-484-8337	P70179-1	<06848> ...BEARING,SLEEVE-0.003 IN... OVERSIZE	12	EA		AR	*	*	*		*	214A	342
P	H		2915-484-8338	P70179-2	<06848> ...BEARING,SLEEVE-0.006 IN... OVERSIZE	12	EA		AR	*	*	*		*	214A	
			5315-850-4664	397469	<06848> ...PIN.....NOTE 4	12	EA		2	*	*	*			214A	343
P	H		2915-485-0759	394228	<06848> ...BUSHING,IDLE NEEDLE..... LINKAGE	12	EA		1	*	*	*		*	214A	344
			5330-297-9908	368343	<06848> ...PACKING,PREFORMED...NOTE 3	12	EA		1	*	*	*			214A	345
P	H		2915-524-4451	393851	<06848> ...BUSHING,IDLE SHAFT-0-003.. IN.OVERSIZE	12	EA		AR	*	*	*		*	214A	346
P	H		2915-293-4690	393852	<06848> ...BEARING,SLEEVE-0.006 IN... OVERSIZE	12	EA		AR	*	*	*		*	214A	
			2915-484-7871	P20109	<06848> ...BUSHING.....NOTE 4	12	EA		1	*	*	*			214A	347
P	H		5340-442-2549	P70385-1	<06848> ...INSERT,SCREW THREAD-..... 0.003 IN.OVERSIZE	12	EA		3	*	*	*		*	214A	348
P	H		5340-442-2550	P70385-2	<06848> ...INSERT,SCREW THREAD-..... 0.006 IN.OVERSIZE	12	EA		AR	*	*	*		*	214A	
				365512	<06848> ...BODY,FUEL CONTROL.....	12	EA		1						214A	349
			2915-626-7448	391521	<06848> .REGULATOR ASSEMBLY..... RPL-BY PN 391521A	12									214A	
AH	H			391521A	<06848> .REGULATOR ASSEMBLY,PRESSURE.	12	EA		1						214A	
			2915-265-0863	365180	<06848> ..PLATE,IDENTIFICATION.NOTE 4 ATTACHING PARTS	12	EA		1	*	*	*			214A	350
			5305-753-7077	MS24621-2	<96906> ..SCREW,TAPPING,THREAD..... ---*---	12	HD		2	*	*	*		*	214A	351
			5340-656-3168	328617	<06848> ..SEAL.....NOTE 3	12	EA		1	*	*	*			214A	

(1) SOURCE, MAINT AND REC CODE (a) SOURCE CODE	(b) MAINT LEVEL	(c) REC CODE	(2) FEDERAL STOCK NUMBER	REFERENCE NUMBER	(3) DESCRIPTION	MODELS USABLE ON CH-34C	(4) UNIT OF ISSUE	(5) QTY INC IN UNIT PACK	(6) QTY INC IN UNIT	(7) 30-DAY DS/GS MAINT ALW (a) 1-20	(b) 21-50	(c) 51-100	(8) 1-YR ALW PER 100 EQUIP CNTGCY	(9) DEPOT MAINT ALW PER 100 EQUIP	(10) ILLUSTRATION (a) FIG NO	(b) ITEM NO
			5340-446-6459	393297 <06848>	..PLUG,SHIPPING.....NOTE 4	12	EA		1	*	*	*			214A	352
			4730-188-3509	MS20913-1 <96906>	..PLUG,PIPE.....NOTE 2	12	EA		1	REF	REF	REF		*	214A	353
			4730-188-3509	MS20913-1 <96906>	..PLUG,PIPE.....NOTE 2	12	EA		1	REF	REF	REF		*	214A	354
			4730-188-3509	MS20913-1 <96906>	..PLUG,PIPE.....NOTE 2	12	EA		1	REF	REF	REF		*	214A	355
			4730-188-3509	MS20913-1 <96906>	..PLUG,PIPE.....NOTE 2	12	EA		1	REF	REF	REF		*	214A	356
			2915-484-8172	P61195 <06848>	..PLUG,TAPER SEAT.....NOTE 4	12	EA		1	*	*	*			214A	357
			5330-263-4587	315S8 <06848>	..PACKING,PREFORMED....NOTE 4	12	EA		1	*	*	*			214A	358
P	O		5310-531-1510	365320 <06848>	..WASHER,FLAT.....NOTE 1 NOTE 4		EA		1	*	*	*		*	214A	359
P	O		2915-201-0165	365261 <06848>	..SPRING,HELICAL,COMPRESSION.	12	EA		1	*	2	2		*	214A	360
P	O		5330-037-9444	365480 <06848>	..WASHER,NONMETALLIC...NOTE 1 NOTE 3		EA		1	30	74	149		*	214A	361
P	O		2915-307-5172	P70038 <06848>	..COVER,STRAINER,CARBURETOR..	12	EA		1	*	*	*		*	214A	362
P	O		5310-266-0577	17454 <06848>	..WASHER,FLAT.....NOTE 1 NOTE 3		EA		1	*	*	*		*	214A	363
P	O		5306-147-6497	P70087 <06848>	..BOLT,MACHINE..... NOTE 4	12	EA		1	*	*	*		*	214A	363A
P	O		2915-370-9892	364708 <06848>	..STRAINER ELEMENT,SEDIMENT.. NOTE 4	12	EA		1	*	*	*		*	214A	364
P	O		5330-037-9427	365321 <06848>	..WASHER,NONMETALLIC...NOTE 1	12	EA		1	*	*	2		*	214A	365
P	H		2915-484-9419	360570 <06848>	..FLOAT AND NEEDLE ASSEMBLY.. ATTACHING PARTS	12	EA		1	*	*	*		*	214A	366
			2915-442-2416	P70057 <06848>	..SCREW ASSEMBLY,FLOAT..... FULCRUM NOTE 4	12	EA		1	*	*	*			214A	367
			5310-286-9678	399983 <06848>	..WASHER,FLAT.....NOTE 4	12	EA		1						214A	368
					---*---											
P	H		2915-307-5343	360571 <06848>	...NEEDLE,VALVE-VAPOR VENT...	12	EA		1	*	*	*		*	214A	369
P	H		2915-307-5344	360576 <06848>	...FLOAT ASSEMBLY,VAPOR VENT.	12	EA		1	*	*	*		*	214A	370
P	H		2915-307-5547	393626 <06848>	..SEAT,VALVE,NEEDLE.....	12	EA		1	*	2	2		*	214A	371
			5340-442-5562	399998 <06848>	..SPACER.....NOTE 3	12	EA		1	*	*	*			214A	372
			5330-298-5788	393629 <06848>	..WASHER,NONMETALLIC...NOTE 3	12	EA		1	*	*	*			214A	373
			5310-149-7130	393631 <06848>	..WASHER.....NOTE 4	12	EA		1	*	*	*			214A	374
			2915-231-3143	393630 <06848>	..SPRING,HELICAL,COMPRESSION. NOTE 4	12	EA		1	*	*	*			214A	375
			5310-877-5798	MS21044D3 <96906>	..NUT,SELF-LOCKING,HEXAGON...	12	EA		1	*	*	*		*	214A	380
			5310-167-0818	AN960-10 <88044>	..WASHER,FLAT.....	12	HD		1	*	*	*		*	214A	381
			5310-877-5798	MS21044D3 <96906>	..NUT,SELF-LOCKING,HEXAGON...	12	EA		1	*	*	*		*	214A	382
			5310-167-0818	AN960-10 <88044>	..WASHER,FLAT.....	12	HD		1	*	*	*		*	214A	383
			5310-857-4960	MS21044D4 <96906>	..NUT,SELF-LOCKING,HEXAGON...	12	EA		2	*	*	*		*	214A	384
			5310-141-1795	AN960-416 <88044>	..WASHER,FLAT.....	12	HD		2	*	*	*		*	214A	385
			5310-857-4960	MS21044D4 <96906>	..NUT,SELF-LOCKING,HEXAGON...	12	EA		1	*	*	*		*	214A	386
			5310-141-1795	AN960-416 <88044>	..WASHER,FLAT.....	12	HD		1	*	*	*		*	214A	387
			5310-147-2052	P70064 <06848>	..NUT,HEXAGON.....NOTE 3	12	EA		1	*	*	*			214A	388
P	H		2915-484-9419	360570 <06848>	..FLOAT AND NEEDLE ASSEMBLY.. ATTACHING PARTS	12	EA		1	*	*	*		*	214A	389
AH	H			P70057 <06848>	..SCREW ASSEMBLY,FLOAT..... FULCRUM NOTE 4	12	EA		1						214A	390
			5310-286-9678	399983 <06848>	..WASHER,FLAT.....NOTE 4	12	EA		1						214A	391
					---*---											
P	H		2915-307-5343	360571 <06848>	...NEEDLE,VALVE VAPOR,VENT...	12	EA		1	*	*	*		*	214A	392
P	H		2915-307-5344	360576 <06848>	...FLOAT ASSEMBLY,VAPOR VENT.	12	EA		1	*	*	*		*	214A	393
P	H		2915-307-5553	393648 <06848>	..SEAT,NEEDLE VALVE.....	12	EA		1	*	*	*		*	214A	394

(1) SOURCE, MAINT AND REC CODE (a) SOURCE CODE	(b) MAINT LEVEL	(c) REC CODE	(2) FEDERAL STOCK NUMBER	REFERENCE NUMBER		(3) DESCRIPTION	MODELS USABLE ON CH-34C	(4) UNIT OF ISSUE	(5) QTY INC IN UNIT PACK	(6) QTY INC IN UNIT	(7) 30-DAY DS/GS MAINT ALW (a) 1-20	(b) 21-50	(c) 51-100	(8) 1-YR ALW PER 100 EQUIP CNTGCY	(9) DEPOT MAINT ALW PER 100 EQUIP	(10) ILLUSTRATION (a) FIG NO	(b) ITEM NO
				399996	<06848>	..SPACER,RING.....NOTE 3	12	EA		1						214A	395
			5330-298-5788	393629	<06848>	..WASHER,NONMETALLIC...NOTE 3	12	EA		1	*	*	*			214A	396
			5310-149-7130	393631	<06848>	..WASHER.....NOTE 4	12	EA		1	*	*	*			214A	397
			2915-231-3143	393630	<06848>	..SPRING,HELICAL,COMPRESSION. NOTE 4	12	EA		1	*	*	*			214A	398
			5305-264-2220	AN503-8-4	<88044>	..SCREW,MACHINE.....	12	GR		1	*	*	*		*	214A	399
P	H		2915-093-4021	365936	<06848>	..VALVE AND SEAT ASSEMBLY,... POPPET	12	EA		1	*	*	*		*	214A	400
						ATTACHING PARTS											
P	H		2915-484-9895	363960	<06848>	..BUSHING,SEAT RETAINER.....	12	EA		1	*	*	*		*	214A	401
						---*---											
			5330-292-4310	366238	<06848>	..WASHER,NONMETALLIC...NOTE 3	12	EA		1	*	*	*			214A	404
			5330-166-1430	P70093	<06848>	..RETAINER,PACKING.....NOTE 4		EA		1	*	*	*			214A	405
			5330-292-0511	364785	<06848>	..PACKING,PREFORMED....NOTE 3	12	EA		1	*	*	*			214A	406
P	H		2915-307-5406	365457	<06848>	..BODY ASSEMBLY,REGULATOR....	12	EA		1	*	*	*		*	214A	407
X2	H		5307-484-9942	364370	<06848>	...STUD,PLAIN.....	12	EA		1	*	*	*		*	214A	408
P	H		5307-207-8175	364371	<06848>	...STUD,RECESSED-0.002 IN.... OVERSIZE	12	EA		AR	*	*	*		*	214A	
P	H		5307-207-8174	364372	<06848>	...STUD,RECESSED-0.004 IN.... OVERSIZE	12	EA		AR	*	*	*		*	214A	
P	H		5307-515-9149	364381	<06848>	...STUD,RECESSED-..... 0.002 IN.OVERSIZE	12	EA		1	*	*	*		*	214A	409
P	H		5307-484-9949	364382	<06848>	...STUD,PLAIN-0.004 IN..... OVERSIZE	12	EA		AR	*	*	*		*	214A	
P	H		5307-515-9150	361401	<06848>	...STUD,STEPPED..... 0.002 IN.OVERSIZE	12	EA		AR	*	*	*		*	214A	410
P	H		5307-515-9151	361402	<06848>	...STUD,STEPPED..... 0.004 IN.OVERSIZE	12	EA		AR	*	*	*		*	214A	
			2915-335-7073	362406	<06848>	...BUSHING.....NOTE 4	12	EA		1	*	*	*			214A	411
			2915-335-7073	362406	<06848>	...BUSHING.....NOTE 4	12	EA		1	*	*	*			214A	412
			2915-335-7073	362406	<06848>	...BUSHING.....NOTE 4	12	EA		1	*	*	*			214A	413
			2915-335-7073	362406	<06848>	...BUSHING.....NOTE 4	12	EA		1	*	*	*			214A	414
P	H		2915-484-9794	362410	<06848>	...BUSHING,FULCRUM SCREW.....	12	EA		1	*	*	*		*	214A	415
P	H		2915-484-8264	P70056	<06848>	...BUSHING,FLOAT FULCRUM..... SCREW-0.002 IN.OVERSIZE	12	EA		AR	*	*	*		*	214A	
P	H		2915-484-8265	P70056-1	<06848>	...BUSHING,FLOAT FULCRUM..... SCREW-0.005 IN.OVERSIZE	12	EA		AR	*	*	*		*	214A	
P	H		2915-484-9794	362410	<06848>	...BUSHING,FULCRUM SCREW.....	12	EA		1	*	*	*		*	214A	416
P	H		2915-484-8264	P70056	<06848>	...BUSHING,FLOAT FULCRUM..... SCREW-0.002 IN.OVERSIZE	12	EA		AR	*	*	*		*	214A	
P	H		2915-484-8265	P70056-1	<06848>	...BUSHING,FLOAT FULCRUM..... SCREW-0.005 IN.OVERSIZE	12	EA		AR	*	*	*		*	214A	
			5315-616-5727	398653	<06848>	...PIN,GROOVED,HEADLESS..... NOTE 4	12	EA		4	*	*	*			214A	417
P	H		2915-316-2131	398921	<06848>	...BUSHING,FUEL INLET.....	12	EA		1	*	*	*		*	214A	418
			5330-263-7925	393788	<06848>	...PACKING,PREFORMED...NOTE 3	12	EA		1	*	*	*			214A	419
			2910-442-1646	P17623	<06848>	...PIN TAPER.....NOTE 4	12	EA		2	*	*	*			214A	420
P	H		4730-165-4730	P70006	<06848>	...ADAPTER BUSHING.....	12	EA		1	*	*	*		*	214A	421
P	H		4730-165-4731	P70006-1	<06848>	...ADAPTER BUSHING-..... 0.002 IN.OVERSIZE	12	EA		AR	*	*	*		*	214A	
P	H		4730-165-4732	P70006-2	<06848>	...BUSHING-0.004 IN.OVERSIZE.	12	EA		AR	*	*	*		*	214A	
				365434	<06848>	...BODY,REGULATOR REAR.....	12	EA		1						214A	428

(1) SOURCE, MAINT AND REC CODE (a) SOURCE CODE	(b) MAINT LEVEL	(c) REC CODE	(2) FEDERAL STOCK NUMBER	REFERENCE NUMBER	(3) DESCRIPTION	MODELS USABLE ON CH-34C	(4) UNIT OF ISSUE MEAS	(5) QTY INC IN UNIT PACK	(6) QTY INC IN UNIT	(7) 30-DAY DS-GS MAINT ALW (a) 1-20	(b) 21-50	(c) 51-100	(8) 1-YR ALW PER 100 EQUIP CNTGCY	(9) DEPOT MAINT ALW PER 100 EQUIP	(10) ILLUSTRATION (a) FIG NO	(b) ITEM NO
			2915-370-9875	364400 <06848>	..GASKET,REGULATOR REAR..... NOTE 3	12	EA		1	*	*	*			214A	429
P	H		2915-484-9878	363725 <06848>	..SCREW ASSEMBLY,POPPET VALVE	12	EA		1	*	*	*		*	214A	430
			5340-148-8898	396716 <06848>	..SHIM.....NOTE 4	12	EA		1	*	*	*			214A	431
P	H		2915-091-6769	364977 <06848>	..PLATE AND PIN ASSEMBLY.....	12	EA		1	*	*	*		*	214A	432
P	H		2915-307-5651	396705 <06848>	..SPACER AND SHAFT,MIXTURE...	12	EA		1	*	*	*		*	214A	433
			5330-285-8150	P70042 <06848>	..WASHER,NONMETALLIC...NOTE 3	12	EA		1	*	*	*			214A	434
			2915-321-1766	365794 <06848>	..RETAINER PLATE,PRESSURE.... REGULATOR NOTE 4	12	EA		1	*	*	*			214A	435
				364395 <06848>	..DIAPHRAGM ASSEMBLY,REAR.... NOTE 3	12	EA		1						214A	436
			2915-370-9875	364400 <06848>	..GASKET,REGULATOR REAR..... NOTE 3	12	EA		1	*	*	*			214A	437
P	F		2915-035-5077	365611 <06848>	..COVER,BODY,REGULATOR UNIT.. ASSEMBLY		EA		1	*	*	*		*	214A	438
					ATTACHING PARTS											
				333S642 <06848>	..SCREW,CAP,SOCKET HEAD..... NOTE 4	12	EA		6						214A	439
			5310-167-0818	AN960-10 <88044>	..WASHER,FLAT.....NOTE 4	12	HD		6	*	*	*		*	214A	440
					---*---											
			2915-037-9411	365067 <06848>	..GASKET.....NOTE 3	12	EA		1	*	*	*			214A	441
P	H		2915-485-1053	396702 <06848>	..NUT,SPRING HOLD DOWN.NOTE 4	12	EA		1	*	*	*		*	214A	442
			2915-308-0879	364491 <06848>	..BUSHING.....NOTE 3	12	EA		1	*	*	*			214A	443
					ATTACHING PARTS											
			5315-234-1856	MS24665-155 <96906>	..PIN,COTTER.....	12	HD		1	*	*	*		*	214A	444
			5310-167-1280	AN310C4 <88044>	..NUT,CASTELLATED,HEXAGON....	12	HD		1	*	*	*		*	214A	445
			5310-141-1795	AN960-416 <88044>	..WASHER,FLAT.....	12	HD		1	*	*	*		*	214A	446
					---*---											
P	H		2915-787-4018	366856 <06848>	..PLATE,DIAPHRAGM.....	12	EA		1	*	*	*		*	214A	447
					ATTACHING PARTS											
			5305-939-9189	MS35275-264 <96906>	..SCREW,MACHINE.....	12	EA		6	*	*	*		*	214A	448
			5310-058-2951	MS35337-81 <96906>	..WASHER,LOCK.....	12	HD		6	*	*	*		*	214A	449
					---*---											
			2915-307-5581	394354 <06848>	..DIAPHRAGM,REGULATOR SEALING NOTE 3	12	EA		1	*	*	*			214A	450
P	H		2915-307-5649	396690 <06848>	..RETAINER,CARBURETOR..... DIAPHRAGM	12	EA		1	*	*	*		*	214A	451
			2915-037-9423	365223 <06848>	..GASKET.....NOTE 3	12	EA		1	*	*	*			214A	452
			4730-188-3509	MS20913-1 <96906>	..PLUG,PIPE.....NOTE 2	12	EA		1	REF	REF	REF		*	214A	453
			2915-485-0603	393399 <06848>	..PLUG,TAPER SEAT.....NOTE 4	12	EA		1	*	*	*			214A	454
			2915-307-5273	P9201-64 <06848>	..JET,METERING.....NOTE 4	12	EA		1	*	*	*			214A	455
				P9201-67 <06848>	..BLEED.....NOTE 4	12	EA		1						214A	456
P	H		2915-307-5063	P19623-40 <06848>	..JET,METERING.....	12	EA		1	*	*	*		*	214A	457
P	H		2915-092-6298	365510 <06848>	..BODY ASSEMBLY,PRESSURE..... REGULATOR	12	EA		1	*	2	2		*	214A	458
X2	H		5307-217-1830	364340 <06848>	...STUD,PLAIN.....	12	EA		2	*	*	*		*	214A	459
P	H		5307-217-1831	364341 <06848>	...STUD,PLAIN-0.003 IN..... OVERSIZE	12	EA		AR	*	*	*		*	214A	
P	H		5307-217-1832	364342 <06848>	...STUD,PLAIN-0.006 IN..... OVERSIZE	12	EA		AR	*	*	*		*	214A	
			2915-442-4792	394255 <06848>	...BODY,PRESSURE REGULATOR... FRONT NOTE 4	12	EA		1	*	*	*			214A	460

(1) SOURCE, MAINT AND REC CODE (a) SOURCE CODE	(b) MAINT LEVEL	(c) REC CODE	(2) FEDERAL STOCK NUMBER	(3) DESCRIPTION REFERENCE NUMBER			MODELS USABLE ON CH-34C	(4) UNIT OF ISSUE	(5) QTY INC IN UNIT PACK	(6) QTY INC IN UNIT	(7) 30-DAY DS/GS MAINT ALW (a) 1-20	(b) 21-50	(c) 51-100	(8) 1-YR ALW PER 100 EQUIP CNTGCY	(9) DEPOT MAINT ALW PER 100 EQUIP	(10) ILLUSTRATION (a) FIG NO	(b) ITEM NO
			2915-308-0878	364026	<06848>	..BUSHING,REGULATOR....NOTE 4	12	EA		1	*	*	*			214A	461
			5330-297-9909	364023	<06848>	..PACKING,PREFORMED....NOTE 3	12	EA		1	*	*	*			214A	462
			5330-285-8150	P70042	<06848>	..WASHER,NONMETALLIC...NOTE 3	12	EA		1	*	*	*			214A	463
			2915-307-5163	P70007	<06848>	..REINFORCING PLATE,..... CARBURETOR NOTE 4		EA		1	*	*	*			214A	464
			2915-370-9876	364401	<06848>	..GASKET,REGULATOR CENTER.... FRONT FACE NOTE 3	12	EA		1	*	*	*			214A	465
			2915-484-9954	364394	<06848>	..DIAPHRAGM ASSEMBLY,FRONT... NOTE 3	12	EA		1	*	*	*			214A	466
			2915-370-9876	364401	<06848>	..GASKET,REGULATOR CENTER.... FRONT FACE NOTE 3	12	EA		1	*	*	*			214A	467
			2915-321-1766	365794	<06848>	..RETAINER PLATE,PRESSURE.... REGULATOR NOTE 4	12	EA		1	*	*	*			214A	468
			5330-285-8150	P70042	<06848>	..WASHER,NONMETALLIC...NOTE 3	12	EA		1	*	*	*			214A	469
			2915-307-5653	396707	<06848>	..SPACER,SPECIAL,AIRCRAFT.... NOTE 4	12	EA		1	*	*	*			214A	470
P	H		2915-307-5650	396699	<06848>	..GUIDE,VALVE,REGULATOR..... ATTACHING PARTS	12	EA		1	*	*	*		*	214A	471
			5340-485-1049	396698	<06848>	..RING,RETAINING.....NOTE 4	12	EA		1	*	*	*			214A	472
						---*---											
			2915-512-4427	396689	<06848>	..BUSHING,SPRING GUIDE.NOTE 4	12	EA		1	*	*	*			214A	473
			2915-201-2097	361465	<06848>	..SPRING,CONSTANT HEAD IDLE.. NOTE 4	12	EA		1	*	*	*		*	214A	474
P	H		2915-485-1051	396700	<06848>	..BUSHING,POPPET VALVE SHAFT.	12	EA		1	*	*	*		*	214A	475
P	H		2915-307-5652	396706	<06848>	..RETAINING PLATE,DIAPHRAGM.. ATTACHING PARTS	12	EA		1	*	*	*		*	214A	476
			5305-939-9179	MS35275-261	<96906>	..SCREW,MACHINE.....	12	EA		6	*	*	*		*	214A	477
						---*---											
			2915-037-9423	365223	<06848>	..GASKET.....NOTE 3	12	EA		1	*	*	*			214A	478
			2915-307-5655	396719	<06848>	..DIAPHRAGM,REGULATOR..NOTE 3	12	EA		1	*	*	*			214A	479
			4730-188-3509	MS20913-1	<96906>	..PLUG,PIPE.....NOTE 2	12	EA		1	REF	REF	REF		*	214A	480
			4730-188-3509	MS20913-1	<96906>	..PLUG,PIPE.....NOTE 2	12	EA		1	REF	REF	REF		*	214A	481
			4730-188-3509	MS20913-1	<96906>	..PLUG,PIPE.....NOTE 2	12	EA		1	REF	REF	REF		*	214A	482
			4730-188-3509	MS20913-1	<96906>	..PLUG,PIPE.....NOTE 2	12	EA		1	REF	REF	REF		*	214A	483
			2915-485-0603	393399	<06848>	..PLUG,TAPER SEAT.....NOTE 4	12	EA		1	*	*	*			214A	484
P	H		2915-442-4297	626655-45	<06848>	..JET,METERING.....	12	EA		1	*	*	*		*	214A	485
P	H		2915-484-9710	361570	<06848>	..BODY ASSEMBLY,CENTER.....	12	EA		1	*	*	*		*	214A	486
P	H		5307-149-4508	P70486-1	<06848>	...STUD,PLAIN-..... 0.003 IN.OVERSIZE	12	EA		AR	*	*	*		*	214A	487
P	H		5307-149-4509	P70486-2	<06848>	...STUD,PLAIN-..... 0.006 IN.OVERSIZE	12	EA		AR	*	*	*		*	214A	
P	H		5307-533-9862	P20506-2	<06848>	...STUD,PLAIN-..... 0.003 IN.OVERSIZE	12	EA		AR	*	*	*		*	214A	488
P	H		5307-298-3028	P20506-3	<06848>	...STUD,PLAIN-..... 0.006 IN.OVERSIZE	12	EA		AR	*	*	*		*	214A	
			2915-484-7871	P20109	<06848>	...BUSHING.....NOTE 4	12	EA		1	*	*	*			214A	489
			2915-484-7871	P20109	<06848>	...BUSHING.....NOTE 4	12	EA		1	*	*	*			214A	490
			2915-484-7871	P20109	<06848>	...BUSHING.....NOTE 4	12	EA		1	*	*	*			214A	491
			2915-484-7871	P20109	<06848>	...BUSHING.....NOTE 4	12	EA		1	*	*	*			214A	492
X1				361569	<06848>	...BODY,PRESSURE REGULATOR...	12	EA		1						214A	493
				391523A	<06848>	.BODY ASSEMBLY,THROTTLE.....	12	EA								214A	
			2915-265-1066	365178	<06848>	..PLATE,IDENTIFICATION.....	12	EA		1	*	*	*			214A	494

(1) SOURCE, MAINT AND REC CODE (a) SOURCE CODE	(b) MAINT LEVEL	(c) REC CODE	(2) FEDERAL STOCK NUMBER	REFERENCE NUMBER	(3) DESCRIPTION	MODELS USABLE ON CH-34C	(4) UNIT OF ISSUE	(5) QTY INC IN UNIT PACK	(6) QTY INC IN UNIT	(7) 30-DAY DS/GS MAINT ALW (a) 1-20	(b) 21-50	(c) 51-100	(8) 1 YR ALW PER 100 EQUIP CNTGCY	(9) DEPOT MAINT ALW PER 100 EQUIP	(10) ILLUSTRATION (a) FIG NO	(b) ITEM NO
					CONTINUED										214A	494
					NOTE 4											
					ATTACHING PARTS											
			5305-753-7077	MS24621-2	<96906> ..SCREW,TAPPING,THREAD.....	12	HD		2	*	*	*		*	214A	495
					---*---											
			4730-188-3509	MS20913-1	<96906> ..PLUG,PIPE.....NOTE 2	12	EA		2	REF	REF	REF		*	214A	496
			4730-188-3509	MS20913-1	<96906> ..PLUG,PIPE.....NOTE 2	12	EA		1	REF	REF	REF		*	214A	497
			2915-484-8172	P61195	<06848> ...PLUG,TAPER SEAT.....NOTE 4	12	EA		1	*	*	*			214A	498
			2915-485-0386	392502-51	<06848> ..JET,METERING.....NOTE 4	12	EA		1	*	*	*			214A	499
			4730-484-7878	P20164	<06848> ..PLUG,HEXAGON HEAD.....NOTE 4	12	EA		1	*	*	*			214A	500
			5330-265-7991	P14426	<06848> ..WASHER RPL-BY.....	12									214A	
					5330-285-9427											
P	H		5330-285-9427	P14427	<06848> ..WASHER,NONMETALLIC.....	12	EA		1	*	*	*		*	214A	501
					RPLS-- 5330-265-7991											
			2915-484-8172	P61195	<06848> ..PLUG,TAPER SEAT.....NOTE 4	12	EA		1	*	*	*			214A	502
P	H		2915-098-8804	360909-54	<06848> ..JET,METERING.....	12	EA		1	*	2	2		*	214A	503
			2915-485-0603	393399	<06848> ..PLUG,TAPER SEAT.....NOTE 4	12	EA		4	*	*	*			214A	504
			2915-307-5275	P9201-70	<06848> ..JET,METERING.....NOTE 4	12	EA		1	*	*	*			214A	505
			5305-167-4132	392726	<06848> ..SCREW.....NOTE 4	12	EA		1	*	*	*			214A	506
P	F		5310-147-9567	P19820	<06848> ..WASHER,SPRING TENSION.....	12	XX		1	*	*	*		*	214A	507
					NOTE 4											
			5310-141-1795	AN960-416	<88044> ..WASHER,FLAT.....	12	HD		1	*	*	*		*	214A	508
P	H		2915-235-7635	360339	<06848> ..SPRING,HELICAL,COMPRESSION.	12	EA		1	*	*	*		*	214A	509
P	H		2915-307-5491	392714	<06848> ..COVER,SHAFT,THROTTLE.....	12	EA		1	*	*	*		*	214A	510
					BALANCE OUTER ADJUSTING											
			5310-147-2014	392725	<06848> ..NUT,THROTTLE BALANCE.NOTE 4	12	EA		1	*	*	*			214A	511
P	H		2915-307-5586	394414	<06848> ..GUIDE,THROTTLE BALANCE.....	12	EA		1	*	*	*		*	214A	512
P	H		2915-307-5707	398375	<06848> ..LINK ASSEMBLY,THROTTLE.....	12	EA		1	*	*	*		*	214A	513
					ATTACHING PARTS											
			5315-234-1856	MS24665-155	<96906> ..PIN,COTTER.....	12	HD		1	*	*	*		*	214A	514
			5310-167-1284	AN310-3	<88044> ..NUT,CASTELLATED,HEXAGON....	12	HD		1	*	*	*		*	214A	515
			5310-167-0818	AN960-10	<88044> ..WASHER,FLAT.....	12	HD		1	*	*	*		*	214A	516
					---*---											
			2915-516-8082	392680	<06848> ...BEARING,SLEEVE.....NOTE 4	12	EA		1	*	*	*			214A	517
X1				394454	<06848> ...LINK,THROTTLE BALANCE.....	12	EA		1						214A	518
X1				398019	<06848> ...COVER,THROTTLE BALANCE....	12	EA		1						214A	519
X2	H		2915-307-5195	P70442-1	<06848> ..VENTURI ASSEMBLY,CARBURETOR	12	EA		1	*	*	*		*	214A	520
			2915-307-5197	P70442-5	<06848> ..VENTURI ASSEMBLY,.....	12									214A	
					CARBURETOR RPL-BY											
					2915-442-2572											
P	H		2915-442-2572	P70442-3S	<06848> ..VENTURI ASSEMBLY,.....	12	EA		1	*	*	*		*	214A	
					CARBURETOR RPLS--											
					2915-307-5197											
					ATTACHING PARTS											
			5305-939-9189	MS35275-264	<96906> ..SCREW,MACHINE.....	12	EA		4	*	*	*		*	214A	521
			5310-167-0818	AN960-10	<88044> ..WASHER,FLAT.....	12	HD		4	*	*	*		*	214A	522
					---*---											
			5330-265-7988	P6580	<06848> ..WASHER.....NOTE 3	12	EA		2	*	*	*			214A	523
			2915-310-3523	P70216	<06848> ..GASKET.....NOTE 3	12	EA		1	*	*	*			214A	524
X2	H		2915-307-5195	P70442-1	<06848> ..VENTURI ASSEMBLY,CARBURETOR	12	EA		1	*	*	*		*	214A	525
P	H		2915-442-2572	P70442-3S	<06848> ..VENTURI ASSEMBLY.....	12	EA		1	*	*	*		*	214A	
					CARBURETOR											

(1) SOURCE, MAINT AND REC CODE (a) SOURCE CODE	(b) MAINT LEVEL	(c) REC CODE	(2) FEDERAL STOCK NUMBER	REFERENCE NUMBER	(3) DESCRIPTION	MODELS USABLE ON CH-34C	(4) UNIT OF ISSUE	(5) QTY INC IN UNIT PACK	(6) QTY INC IN UNIT	(7) 30-DAY DS GS MAINT ALW (a) 1-20	(b) 21-50	(c) 51-100	(8) 1-YR ALW PER 100 EQUIP CNTGCY	(9) DEPOT MAINT ALW PER 100 EQUIP	(10) ILLUSTRATION (a) FIG NO	(b) ITEM NO
					CONTINUED										214A	
					ATTACHING PARTS											
			5305-939-9189	MS35275-264	<96906> ..SCREW,MACHINE.....	12	EA		4	*	*	*		*	214A	526
			5310-167-0818	AN960-10	<88044> ..WASHER,FLAT.....	12	HD		4	*	*	*		*	214A	527
					---*---											
			5330-265-7988	P6580	<06848> ..WASHER.....NOTE 3	12	EA		2	*	*	*			214A	528
			2915-310-3523	P70216	<06848> ..GASKET.....NOTE 3	12	EA		1	*	*	*			214A	529
P	H		2915-035-5090	365739-3 1-2	<06848> ..VENTURI ASSEMBLY.....	12	EA		1	*	*	*		*	214A	530
					ATTACHING PARTS											
			5305-145-7018	AN503-10-10	<88044> ..SCREW,MACHINE.....	12	HD		1	*	*	*		*	214A	531
			5310-511-9331	394627	<06848> ..WASHER.....NOTE 4	12	EA		1	*	*	*			214A	532
					---*---											
P	H		2915-307-5476	392525	<06848> ...TUBE,IMPACT,CARBURETOR....	12	EA		8	*	*	*		*	214A	533
P	H		2915-037-9543	392525-1	<06848> ...TUBE,IMPACT-0.003 IN.....	12	EA		AR	*	*	*		*	214A	
					OVERSIZE											
P	H		2915-093-4027	392525-2	<06848> ...TUBE,IMPACT-0.006 IN.....	12	EA		AR	*	*	*		*	214A	
					OVERSIZE											
X1				P70721	<06848> ...VENTURI.....	12	EA		1						214A	534
			2915-233-7896	P60245	<06848> ..PACKING,PREFORMED....NOTE 3	12	EA		1	*	*	*			214A	535
			5330-292-3318	365738	<06848> ..PACKING,PREFORMED....NOTE 3	12	EA		1	*	*	*			214A	536
P	H		2915-035-5090	365739-3 1-2	<06848> ..VENTURI ASSEMBLY.....	12	EA		1	*	*	*		*	214A	537
					ATTACHING PARTS											
			5305-145-7018	AN503-10-10	<88044> ..SCREW,MACHINE.....	12	HD		1	*	*	*		*	214A	538
			5310-511-9331	394627	<06848> ..WASHER.....	12	EA		1	*	*	*			214A	539
					---*---											
P	H		2915-307-5476	392525	<06848> ..TUBE,IMPACT.....	12	EA		8	*	*	*		*	214A	540
P	H		2915-037-9543	392525-1	<06848> ...TUBE,IMPACT-0.003 IN.....	12	EA		AR	*	*	*		*	214A	
					OVERSIZE											
P	H		2915-093-4027	392525-2	<06848> ...TUBE,IMPACT-0.006 IN.....	12	EA		AR	*	*	*		*	214A	
					OVERSIZE											
X1				P70721	<06848> ...VENTURI.....	12	EA		1						214A	541
			2915-233-7896	P60245	<06848> ..PACKING,PREFORMED....NOTE 3	12	EA		1	*	*	*			214A	542
			5330-292-3318	365738	<06848> ..PACKING,PREFORMED....NOTE 3	12	EA		1	*	*	*			214A	543
P	H		2915-098-3931	365883	<06848> ..STEM ASSEMBLY,THROTTLE STOP	12	EA		1	*	*	*		*	214A	544
			2915-235-1596	P19064	<06848> ..SPRING,HELICAL,COMPRESSION. NOTE 4	12	EA		1	*	*	*			214A	545
P	H		2915-307-5223	P70716	<06848> ..THROTTLE VALVE,CARBURETOR..	12	EA		2	*	*	*		*	214A	546
					ATTACHING PARTS											
			5305-147-1919	P15737	<06848> ..SCREW,MACHINE.....NOTE 3	12	EA		4	*	*	*			214A	547
			5310-045-3299	MS35338-42	<96906> ..WASHER,LOCK.....	12	HD		4	*	*	*		*	214A	548
			5305-167-4108	P70903	<06848> ..SCREW,MACHINE.....NOTE 3	12	EA		2	*	*	*			214A	549
				P3157	<06848> ..WASHER,LOCK.....NOTE 3	12	EA		2						214A	550
					---*---											
P	H		2915-093-4019	365834	<06848> ..LEVER AND STOP ASSEMBLY.... THROTTLE	12	EA		1	*	*	*		*	214A	551
					ATTACHING PARTS											
			5315-234-1864	MS24665-302	<96906> ..PIN,COTTER.....	12	HD		1	*	*	*		*	214A	552
			5310-582-6058	AN310-6	<88044> ..NUT,CASTELLATED,HEXAGON....	12	EA		1	*	*	*		*	214A	553
			2915-484-8538	P70648	<06848> ..SPACER.....NOTE 4	12	EA		1	*	*	*			214A	554
			5315-484-7861	P19627-1	<06848> ..PIN,TAPERED,PLAIN-0.005.... IN.OVERSIZE NOTE 4	12	EA		AR	*	*	*			214A	555
			5315-484-7862	P19627-2	<06848> ..PIN,TAPERED,PLAIN-0.010....	12	EA		AR	*	*	*			214A	

(1) SOURCE, MAINT AND REC CODE (a) SOURCE CODE	(b) MAINT LEVEL	(c) REC CODE	(2) FEDERAL STOCK NUMBER	REFERENCE NUMBER	(3) DESCRIPTION	MODELS USABLE ON CH-34C	(4) UNIT OF ISSUE	(5) QTY INC IN UNIT PACK	(6) QTY INC IN UNIT	(7) 30-DAY DS/GS MAINT ALW (a) 1-20	(b) 21-50	(c) 51-100	(8) 1-YR ALW PER 100 EQUIP CNTGCY	(9) DEPOT MAINT ALW PER 100 EQUIP	(10) ILLUSTRATION (a) FIG NO	(b) ITEM NO
					CONTINUED										214A	
					IN.OVERSIZE NOTE 4											
					---*---											
			5310-148-5180	P70245 <06848>	..WASHER.....NOTE 4	12	EA		1	*	*	*			214A	556
P	H		2915-795-2667	367750 <06848>	..LEVER.....	12	EA		1	*	*	*		*	214A	557
					ATTACHING PARTS											
			5315-234-1864	MS24665-302 <96906>	..PIN,COTTER.....	12	HD		1	*	*	*		*	214A	558
			5310-582-6058	AN310-6 <88044>	..NUT,CASTELLATED,HEXAGON....	12	EA		1	*	*	*		*	214A	559
					---*---											
P	H		2915-307-5532	393450 <06848>	..SHAFT ASSEMBLY,THROTTLE....	12	EA		1	*	*	*		*	214A	560
X1				P70923 <06848>	...LEVER AND STOP ASSEMBLY,..	12	EA		1						214A	561
					THROTTLE											
					ATTACHING PARTS											
			5315-484-7861	P19627-1 <06848>	...PIN,TAPERED,PLAIN-0.005...	12	EA		AR	*	*	*			214A	562
					IN.OVERSIZE NOTE 4											
			5315-484-7862	P19627-2 <06848>	...PIN,TAPERED,PLAIN-0.010...	12	EA		AR	*	*	*			214A	
					IN.OVERSIZE NOTE 4											
					---*---											
			2915-484-8554	P70685 <06848>	....BEARING,SLEEVE.....NOTE 4	12	EA		1	*	*	*			214A	563
X1				P70926 <06848>	....LEVER AND STOP THROTTLE..	12	EA		1						214A	564
					BLANK											
			5310-148-5180	P70245 <06848>	...WASHER.....NOTE 4	12	EA		1	*	*	*			214A	565
X1				P70718 <06848>	...SHAFT,THROTTLE.....	12	EA		1						214A	566
			5330-263-7924	394373 <06848>	..PACKING,PREFORMED....NOTE 3	12	EA		1	*	*	*			214A	577
			5330-263-7924	394373 <06848>	..PACKING,PREFORMED....NOTE 3	12	EA		1	*	*	*			214A	578
AH	H			365947 <06848>	..BODY ASSEMBLY,THROTTLE.....	12	EA		1						214A	579
P	H		5307-298-4296	365951 <06848>	...STUD,STEPPED-0.003 IN.....	12	EA		AR	*	*	*		*	214A	580
					OVERSIZE											
P	H		5307-297-8579	365952 <06848>	...STUD,STEPPED-0.006 IN.....	12	EA		AR	*	*	*		*	214A	
					OVERSIZE											
P	H		5307-485-1600	399901 <06848>	...STUD,STEPPED-0.003 IN.....	12	EA		AR	*	*	*		*	214A	581
					OVERSIZE											
P	H		5307-485-1601	399902 <06848>	...STUD,STEPPED-0.006 IN.....	12	EA		AR	*	*	*		*	214A	
					OVERSIZE											
P	H		5307-149-4502	P70549-1 <06848>	...STUD,STEPPED-0.003 IN.....	12	EA		AR	*	*	*		*	214A	582
					OVERSIZE											
P	H		5307-149-4503	P70549-2 <06848>	...STUD,STEPPED-0.006 IN.....	12	EA		1	*	*	*		*	214A	
					OVERSIZE											
P	H		5307-533-9877	P70191-2 <06848>	...STUD,PLAIN-.....	12	EA		1	*	*	*		*	214A	583
					0.003 IN.OVERSIZE											
P	H		5307-638-2064	P70191-3 <06848>	...STUD,PLAIN-.....	12	EA		AR	*	*	*		*	214A	
					0.006 IN.OVERSIZE											
P	H		2915-524-4332	P70250-1 <06848>	...BUSHING,SLEEVE-0.003 IN...	12	EA		AR	*	*	*		*	214A	584
					OVERSIZE											
P	H		2915-288-2976	P70250-2 <06848>	...BEARING,SLEEVE-0.006 IN...	12	EA		AR	*	*	*		*	214A	
					OVERSIZE											
			5315-850-4664	397469 <06848>	...PIN,TYPE 2.....NOTE 4	12	EA		20	*	*	*			214A	585
P	H		2915-149-9412	394460 <06848>	...BUSHING.....	12	EA		10	*	*	*		*	214A	586
				398945 <06848>	...PIN,STRAIGHT,HEADLESS.....	12	EA		1						214A	587
					NOTE 4											
P	H		2915-516-7962	P70714 <06848>	...BEARING,SLEEVE.....	12	EA		1	*	*	*		*	214A	588
P	H		2915-485-1159	397461 <06848>	...BEARING,SLEEVE-0.003 IN...	12	EA		AR	*	*	*		*	214A	

(1) SOURCE, MAINT AND REC CODE (a) SOURCE CODE	(b) MAINT LEVEL	(c) REC CODE	(2) FEDERAL STOCK NUMBER	REFERENCE NUMBER	(3) DESCRIPTION	MODELS USABLE ON CH-34C	(4) UNIT OF ISSUE	(5) QTY INC IN UNIT PACK	(6) QTY INC IN UNIT	(7) 30-DAY DS GS MAINT ALW (a) 1-20	(b) 21-50	(c) 51-100	(8) 1-YR ALW PER 100 EQUIP CNTGCY	(9) DEPOT MAINT ALW PER 100 EQUIP	(10) ILLUSTRATION (a) FIG NO	(b) ITEM NO
					CONTINUED										214A	
					OVERSIZE											
P	H		2915-485-1160	397462 <06848>	...BEARING,SLEEVE-0.006 IN...	12	EA		AR	*	*	*		*	214A	
					OVERSIZE											
P	H		2915-516-7962	P70714 <06848>	...BEARING,SLEEVE.....	12	EA		1	*	*	*		*	214A	589
P	H		2915-485-1159	397461 <06848>	...BEARING,SLEEVE-0.003 IN...	12	EA		AR	*	*	*		*	214A	
					OVERSIZE											
P	H		2915-485-1160	397462 <06848>	...BEARING,SLEEVE-0.006 IN...	12	EA		AR	*	*	*		*	214A	
					OVERSIZE											
P	H		2915-037-9104	P70715 <06848>	...BUSHING,THROTTLE SHAFT....	12	EA		1	*	*	*		*	214A	590
					CENTER											
P	H		2915-097-4642	397471 <06848>	...BUSHING,THROTTLE SHAFT....	12	EA		AR	*	*	*		*	214A	
					CENTER-0.003 IN.OVERSIZE											
P	H		2915-097-4643	397472 <06848>	...BUSHING,THROTTLE SHAFT....	12	EA		AR	*	*	*		*	214A	
					CENTER-0.006 IN.OVERSIZE											
			2915-484-7871	P20109 <06848>	...BUSHING.....NOTE 4	12	EA		1	*	*	*			214A	591
X1				365962 <06848>	...BODY,THROTTLE.....	12	EA		1						214A	
					SEMI-FINISHED											
P	H		2915-856-9722	350496B <06848>	PARTS KIT,CARBURETOR.....	12	EA		1	*	2	2	14	*	214A	
					OVERHAUL U/O											
					2915-731-9396 SEE											
					FUNCTIONAL GROUP 50 FOR											
					COMPONENTS											
P	H		2915-775-0591	350497A <06848>	PARTS KIT,CARBURETOR,CURE....	12	EA		1	*	2	2	14	*	214A	
					DATE U/O 2915-731-9396											
					SEE FUNCTIONAL GROUP 50 FOR											
					COMPONENTS											
P	O		2915-775-0606	350507A <06848>	PARTS KIT,STRAINER U/O.....	12	EA		1	*	*	*		*	214A	
					2915-731-9396 SEE											
					FUNCTIONAL GROUP 50 FOR											
					COMPONENTS											
			2915-775-6528	350509A <06848>	PARTS KIT,CARBURETOR RPL-BY.	12									214A	
					2915-783-6757											
P	F		2915-783-6757	350407A <06848>	PARTS KIT,VALVE,CURE DATE....	12	EA		1	2	2	3	36	*	214A	
					RPLS-- 2915-775-6528											
					U/O 2915-731-9396 SEE											
					FUNCTIONAL GROUP 50 FOR											
					COMPONENTS											
P	F		2915-788-3351	350406A <06848>	PARTS KIT,AUTOMATIC U/O.....	12	EA		1	*	2	2		*	214A	
					2915-731-9396 SEE											
					FUNCTIONAL GROUP 50 FOR											
					COMPONENTS											
					NOTE 1											
					COMPONENT OF KIT											
					2915-775-0606											
					NOTE 2											
					COMPONENT OF KIT											
					2915-783-6757											
					NOTE 3											
					COMPONENT OF KIT											
					2915-775-0591											
					NOTE 4											

(1) SOURCE, MAINT AND REC CODE (a) SOURCE CODE	(b) MAINT LEVEL	(c) REC CODE	(2) FEDERAL STOCK NUMBER	REFERENCE NUMBER	(3) DESCRIPTION	MODELS USABLE ON CH-34C	(4) UNIT OF ISSUE	(5) QTY INC IN UNIT PACK	(6) QTY INC IN UNIT	(7) 30-DAY DS/GS MAINT ALW (a) 1-20	(b) 21-50	(c) 51-100	(8) 1-YR ALW PER 100 EQUIP CNTGCY	(9) DEPOT MAINT ALW PER 100 EQUIP	(10) ILLUSTRATION (a) FIG NO	(b) ITEM NO
					CONTINUED										214A	
					COMPONENT OF KIT											
					2915-856-9722											
					NOTE 5											
					COMPONENT OF KIT											
					2915-788-3351											
AO	0			430058 <66640>	PRIMING SYSTEM ASSEMBLY.....	12	EA		1						215	
					SEE FIG.183A FOR NHA											
MF	0			4720EG003-4C0140 <81996>	.HOSE ASSEMBLY.....	12	EA		1						215	1
					TETRAFLUOROETHLENE											
					MAKEFR											
					ARFT 4720-857-1732 HOSE											
					2 EA 4730-952-5532 ADAPTER											
					2 EA 4730-967-9513 NUT											
					2 EA 4730-967-9521 SLEEVE											
					2 EA 5340-834-8830 PLUG											
P	0		2810-663-1535	171795 <66640>	.BRACKET,ANGLE.....	12	EA		1	*	*	2		*	215	2
P	0		5340-954-6826	EAB70008 <81996>	.CLAMP,LOOP.....	12	EA		1	*	*	*		*	215	3
			5310-877-5797	MS21044N3 <96906>	.NUT,SELF-LOCKING,HEXAGON....	12	EA		1	*	*	*		*	215	4
P	0		5310-148-8871	27D24 <66640>	.WASHER,FLAT.....	12	EA		1	*	*	*		*	215	5
			5306-174-3863	AN102810 <88044>	.BOLT,MACHINE.....	12	HD		1	*	*	*		*	215	6
			4730-287-1032	MS20822-4B <96906>	.ELBOW,PIPE.....	12	EA		1	*	*	*		*	215	7
P	0		2915-671-0346	432299 <66640>	.ELBOW,FUEL PRIMING SYSTEM...	12	EA		1	*	2	2		*	215	8
X1				163D62 <66640>	..NOZZLE-PRIMER SPIRAL TYPE..	12	EA		1						215	

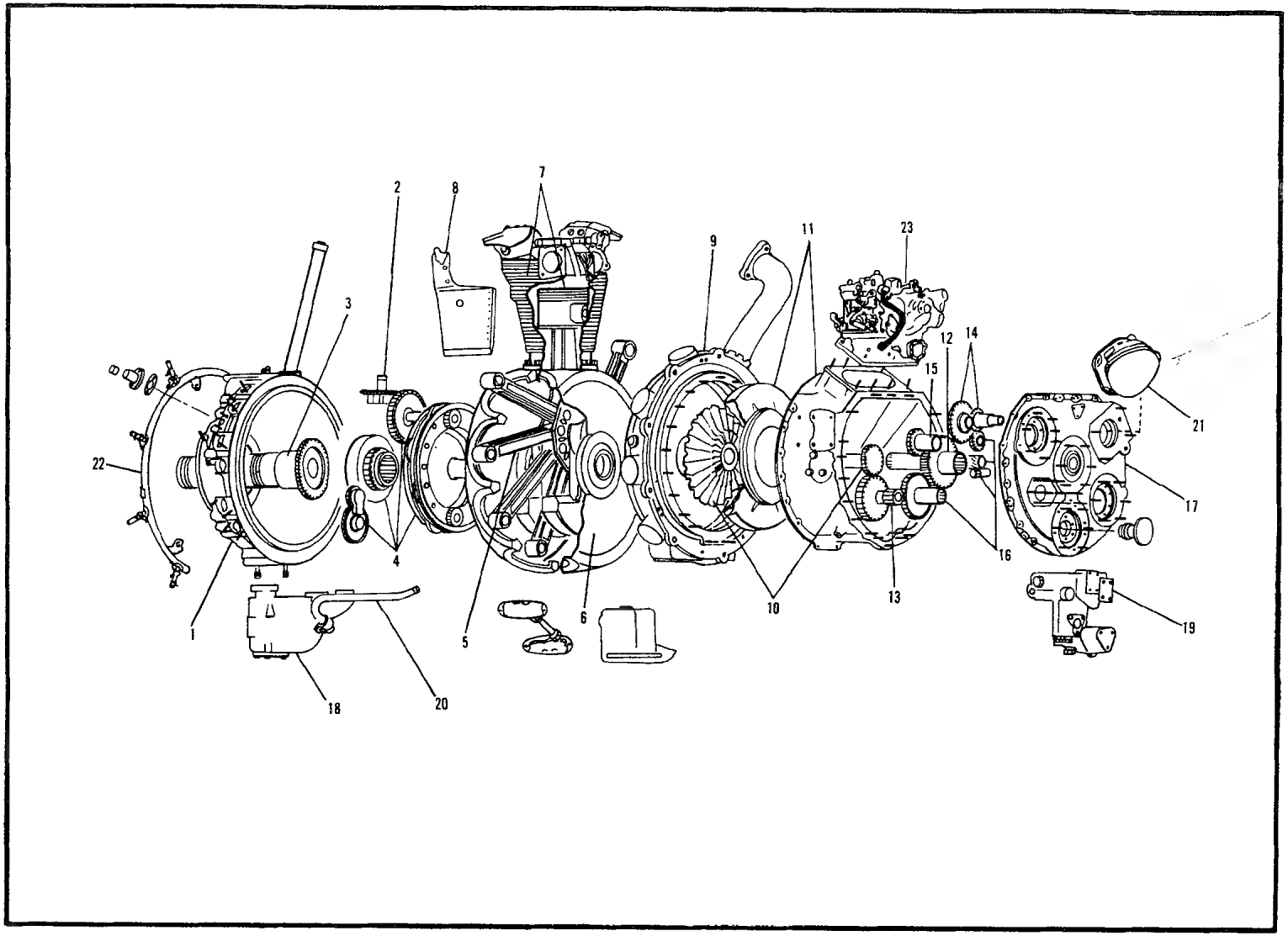

Figure 183A. Engine, Aircraft, Reciprocating

1093

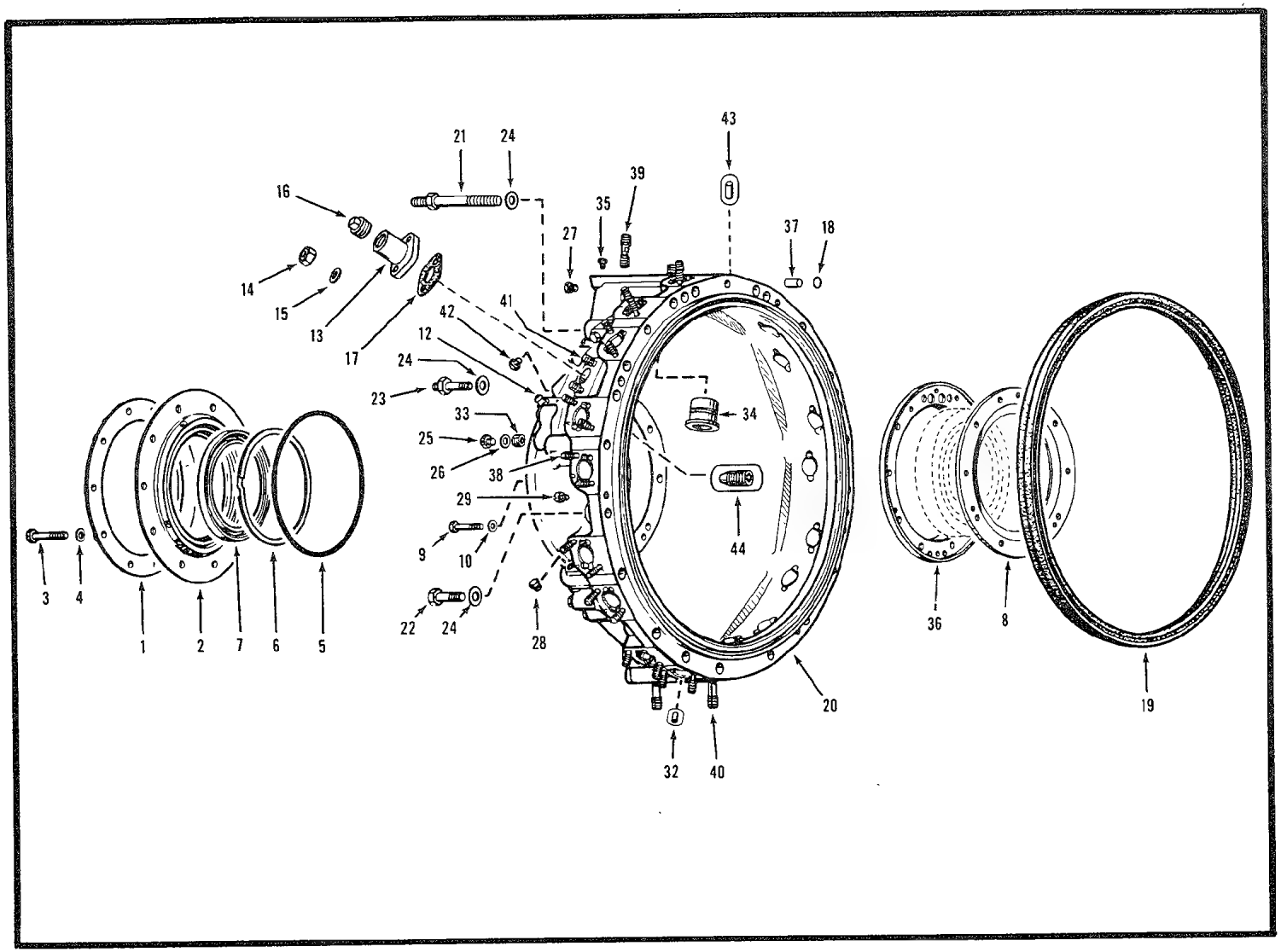

1093

Figure 184. Crankcase, Front Section

1094

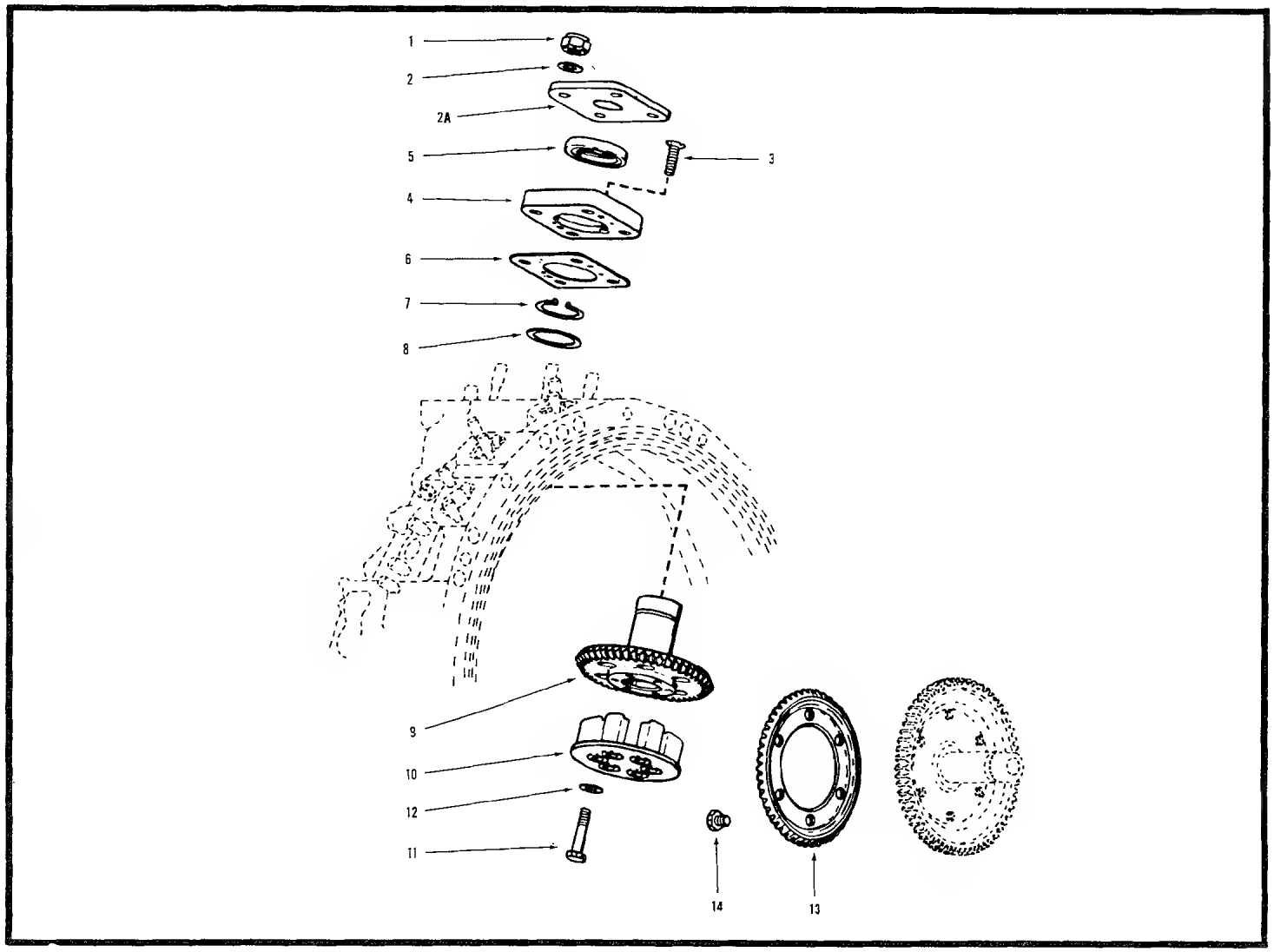

1094

Figure 185. Oil Separator Spinner Drive

1095

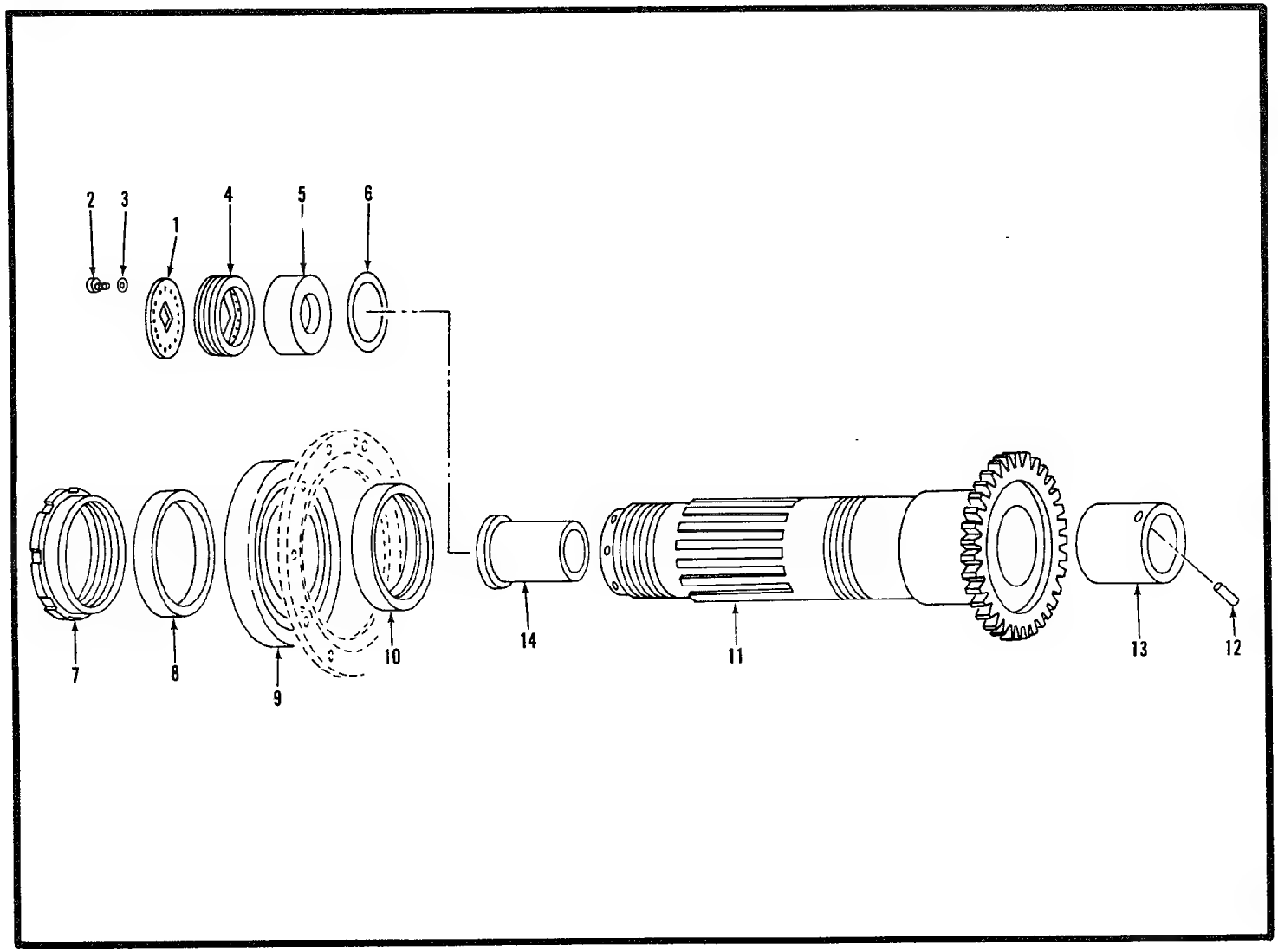

1095

Figure 186. Propeller Shaft

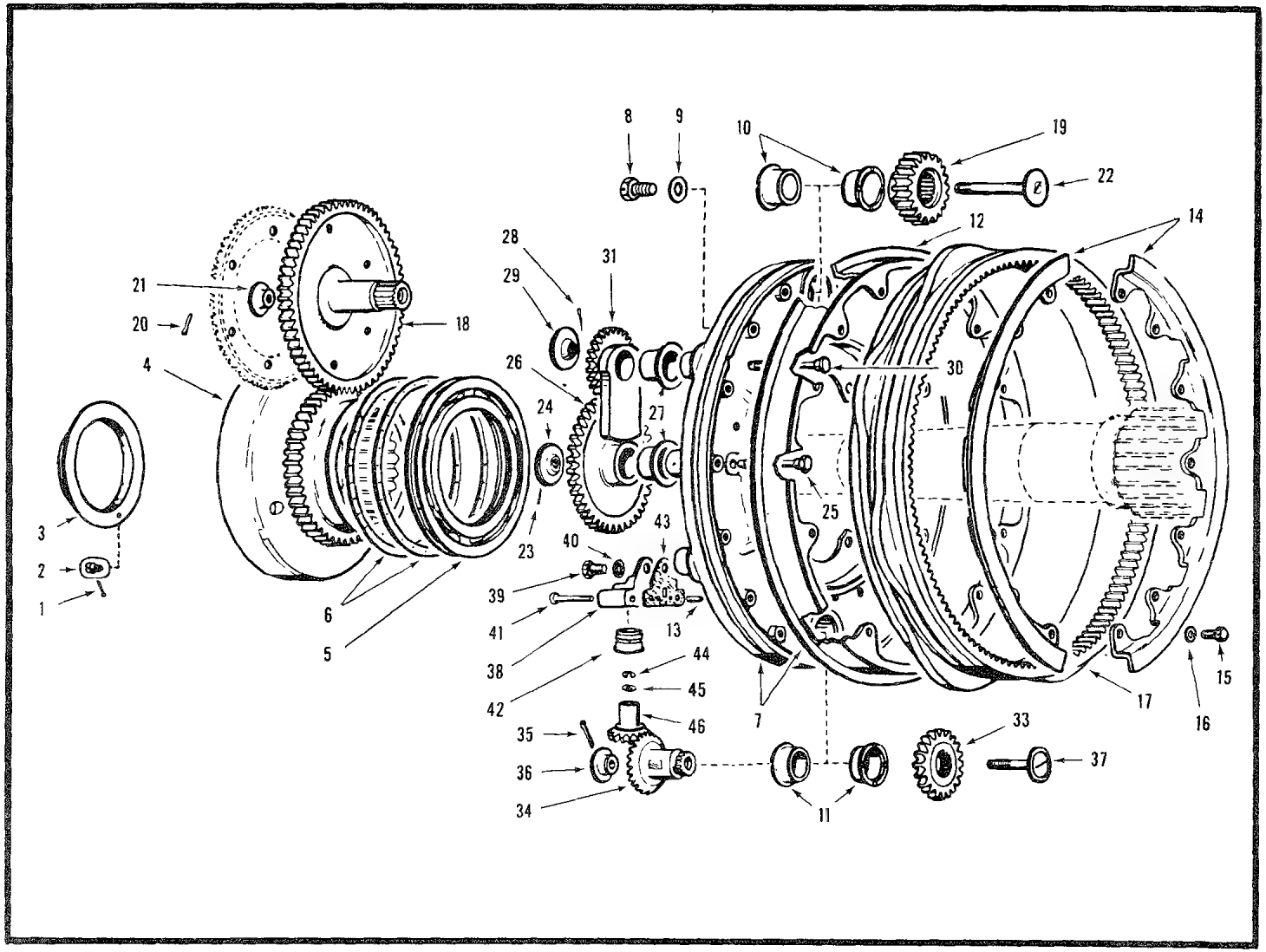

Figure 187. Propeller Shaft Coupling and Cam Mechanism

1097

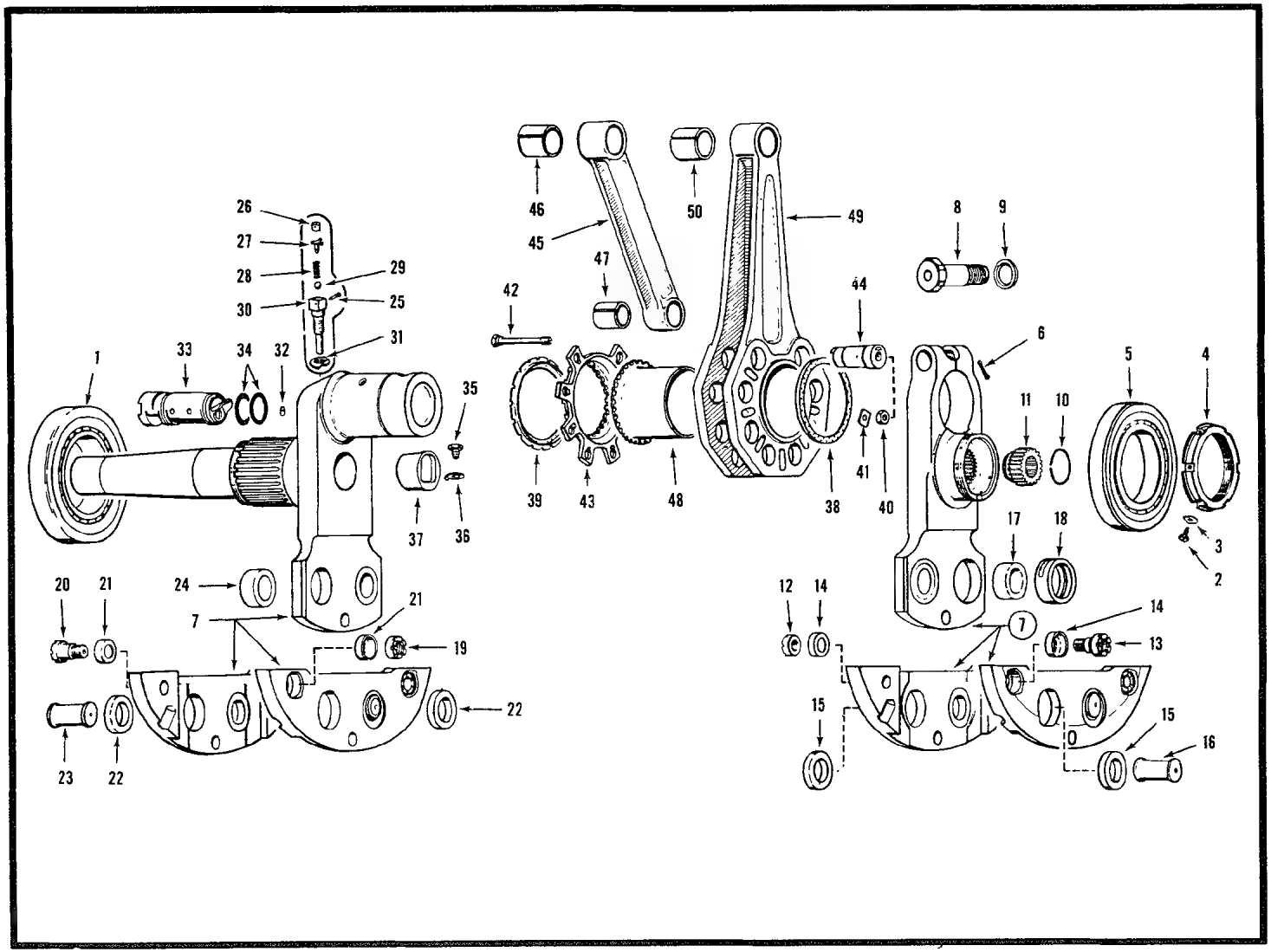

1097

Figure 188. Crankshaft and Connecting Rods

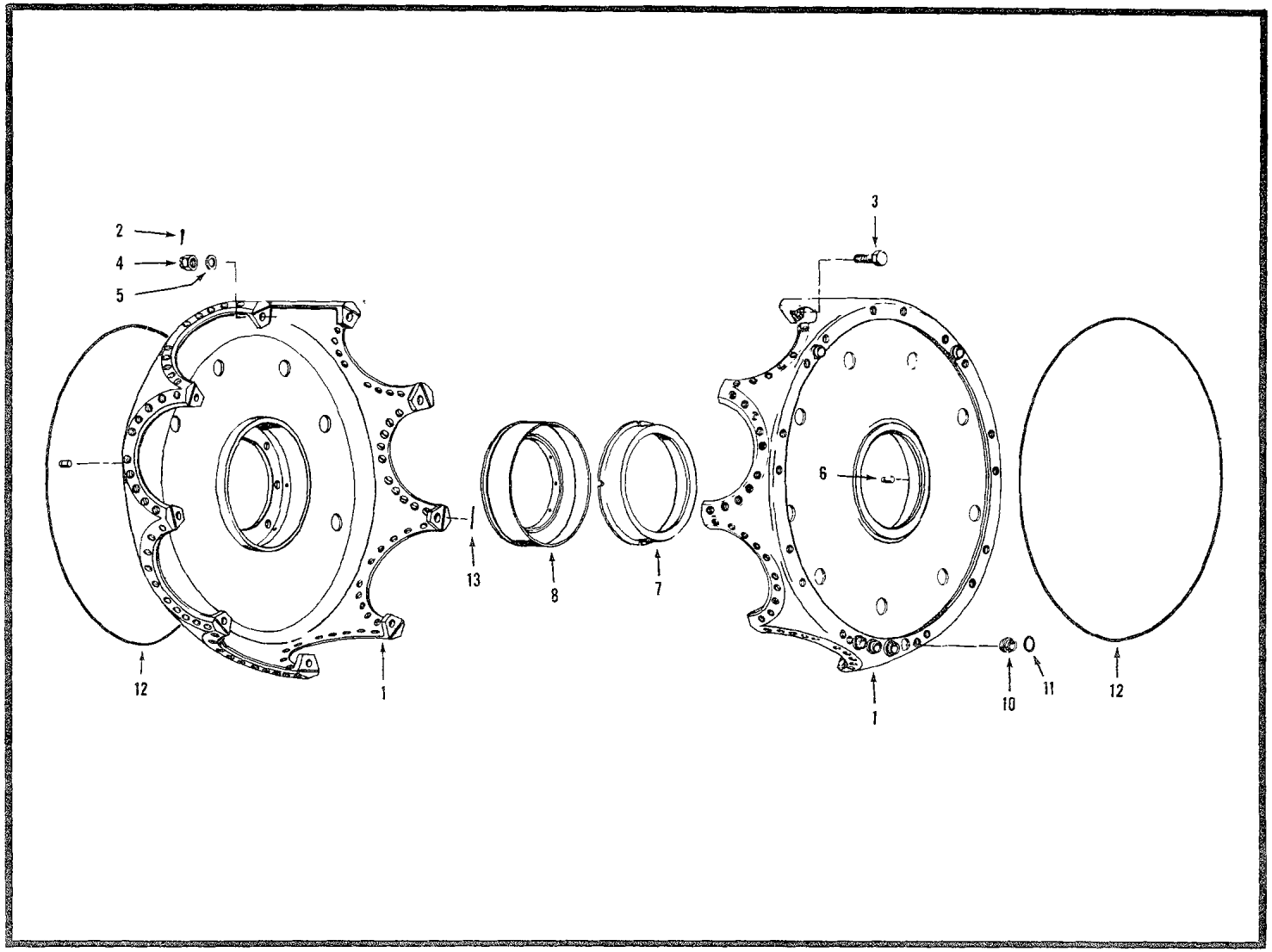

Figure 189. Crankcase, Main Section Machining Assembly

1099

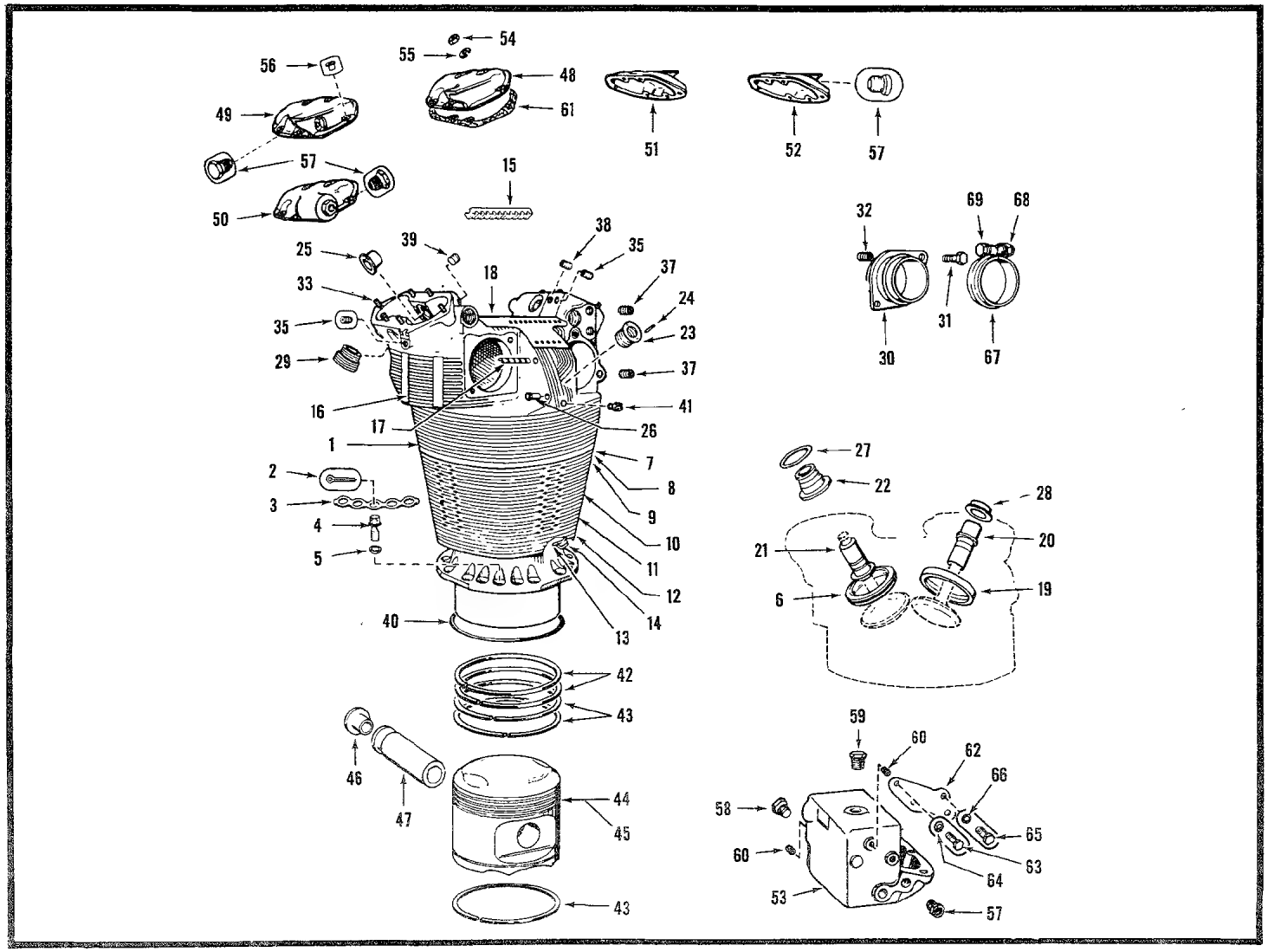

1099

Figure 190. Cylinders and Pistons

1100

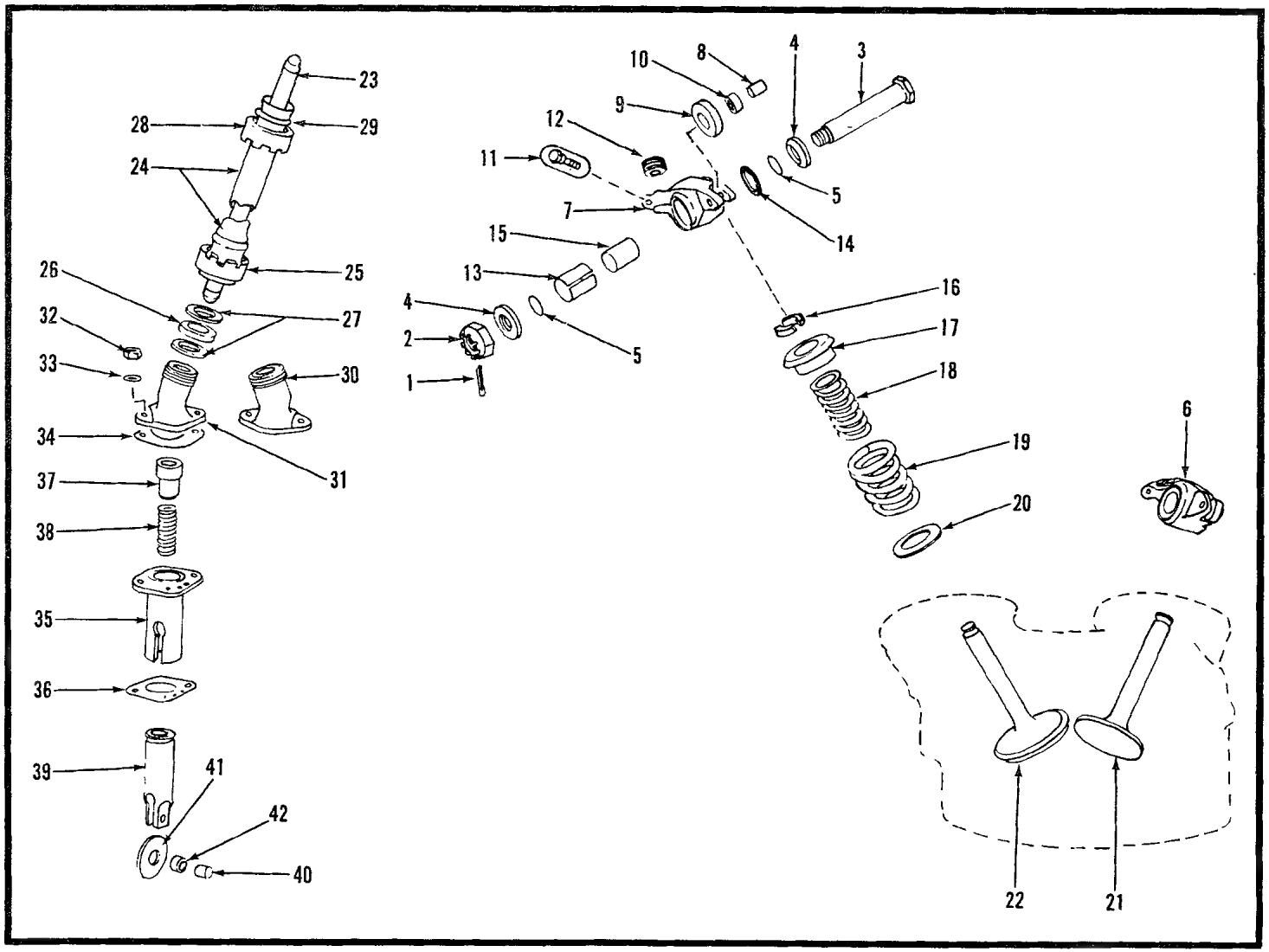

1100

Figure 190A. Valve Mechanism

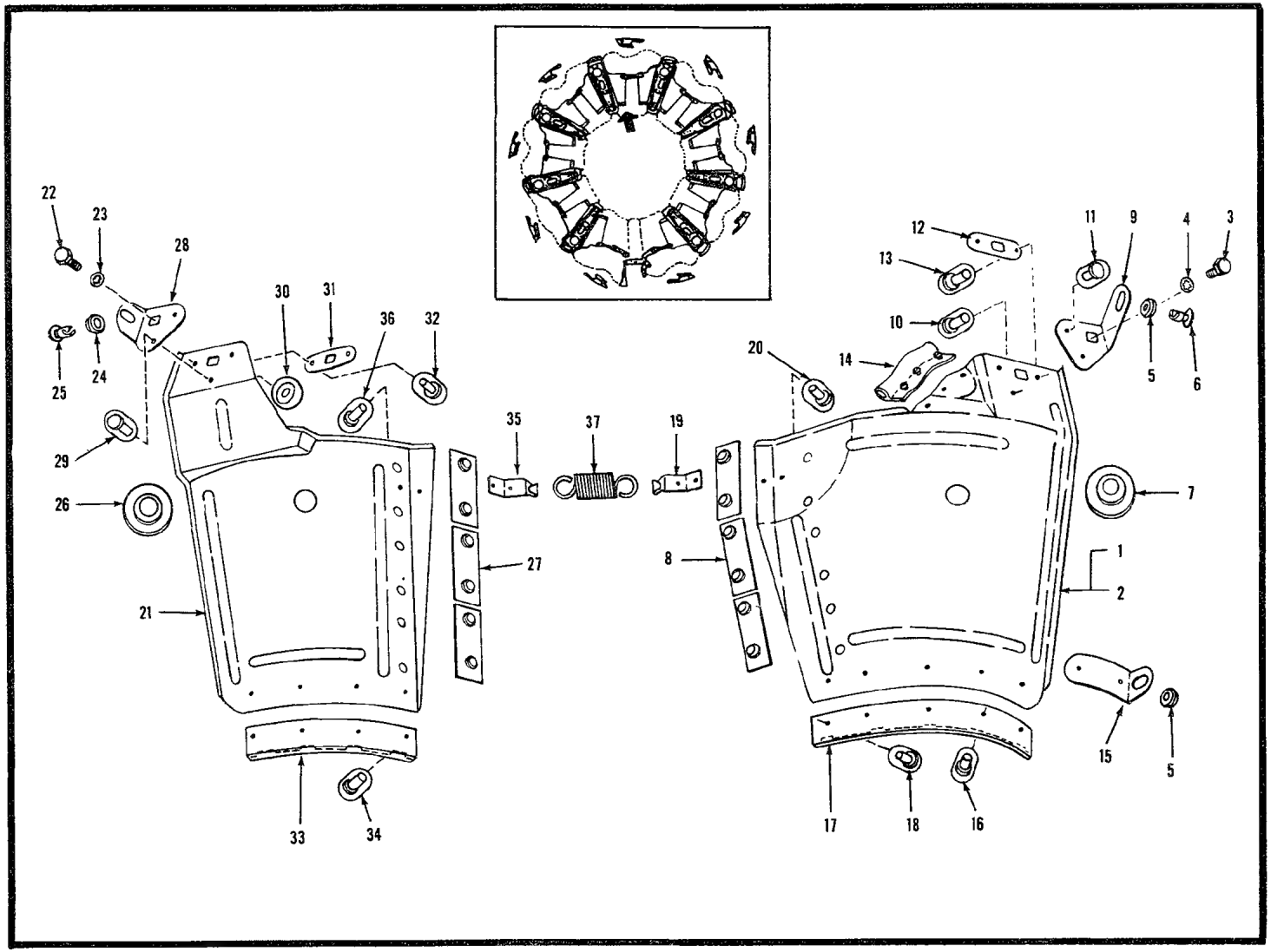

Figure 191. Deflector Assembly, Cylinder Exhaust and Intake

1102

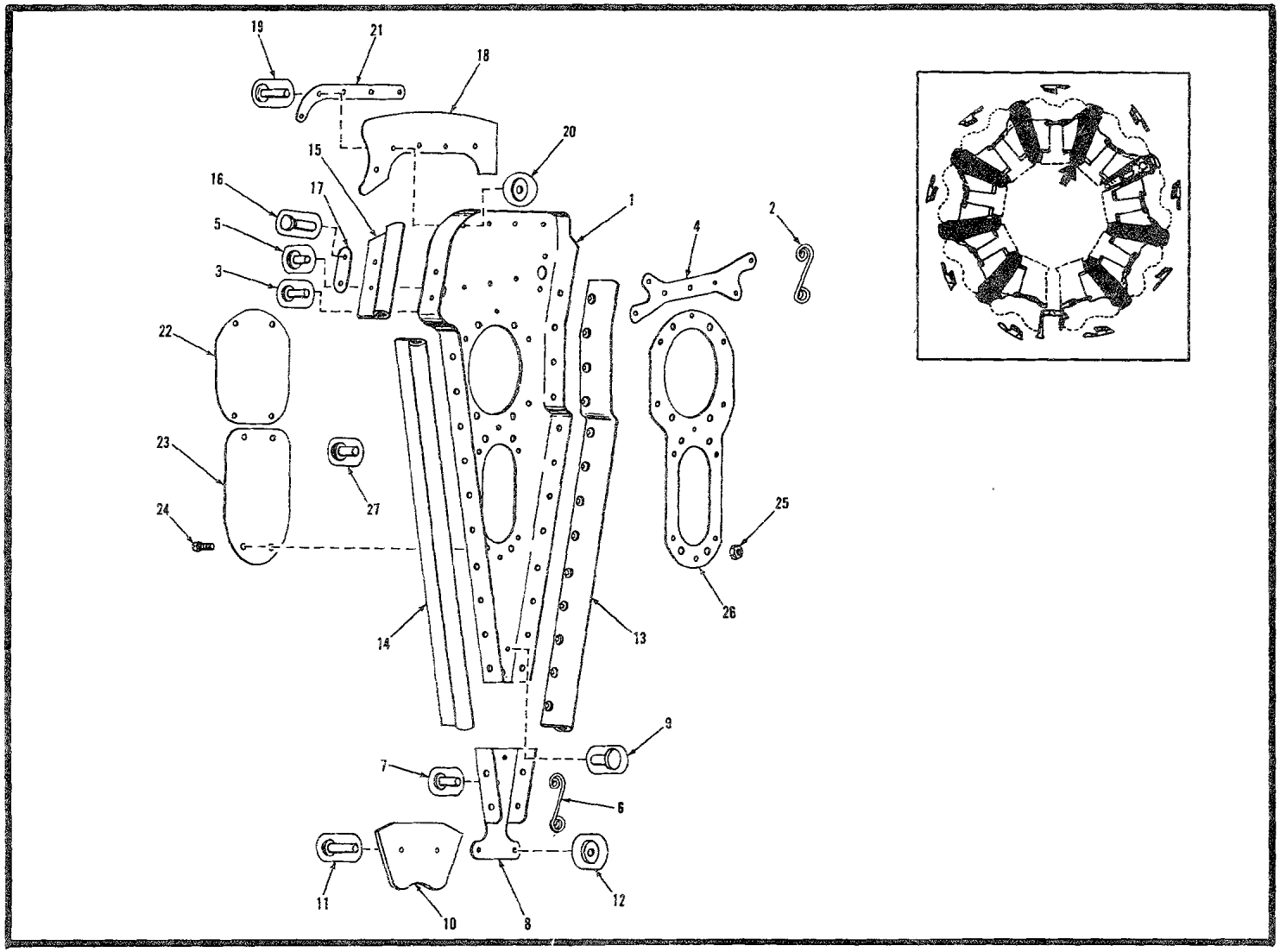

1102

Figure 192. Deflector Assembly, Intercylinder Air

1103

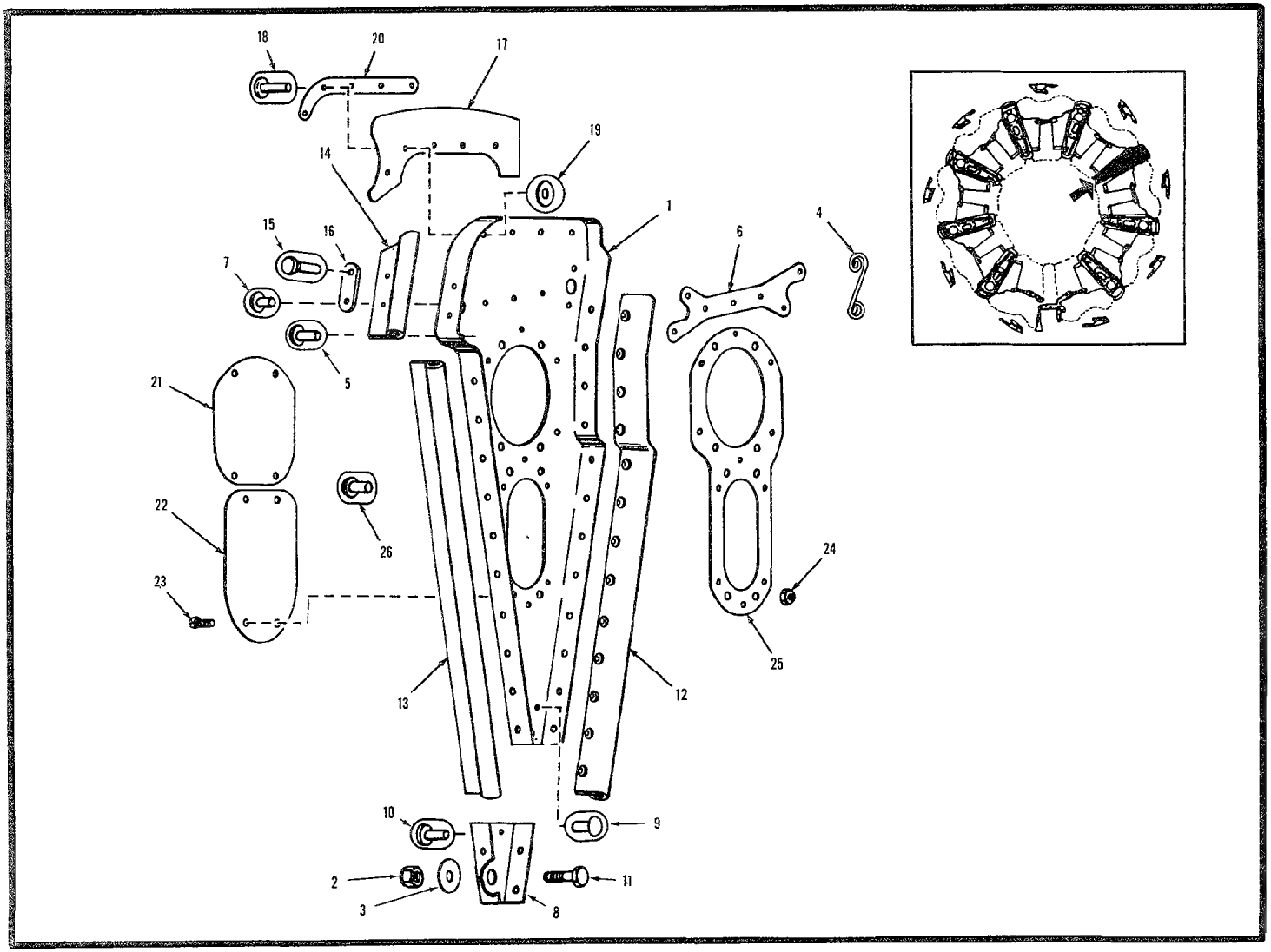

1103

Figure 193. Deflector Assembly, Intercylinder

1104

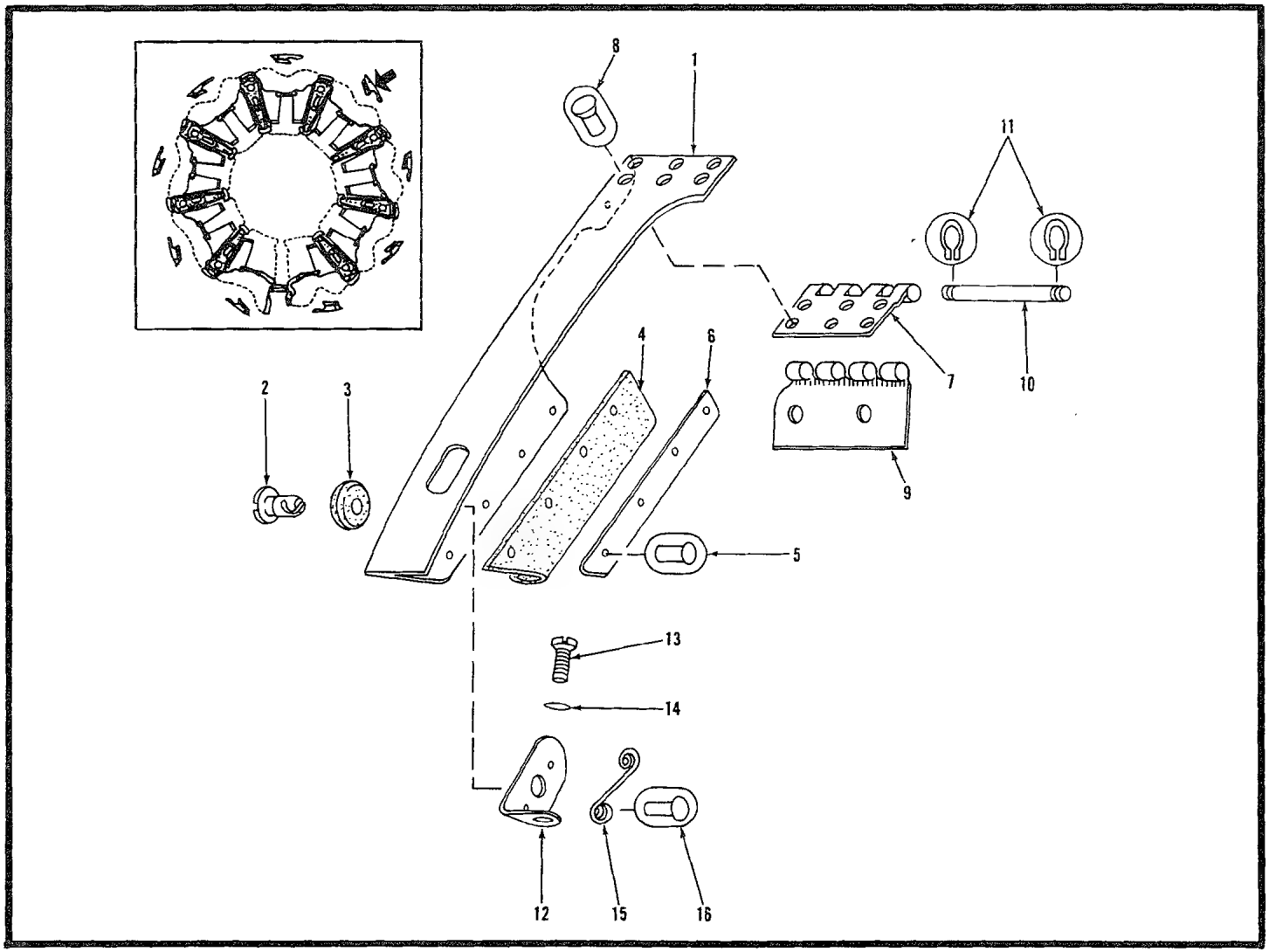

1104

Figure 194. Channel Assembly-Cowl Seal

1105

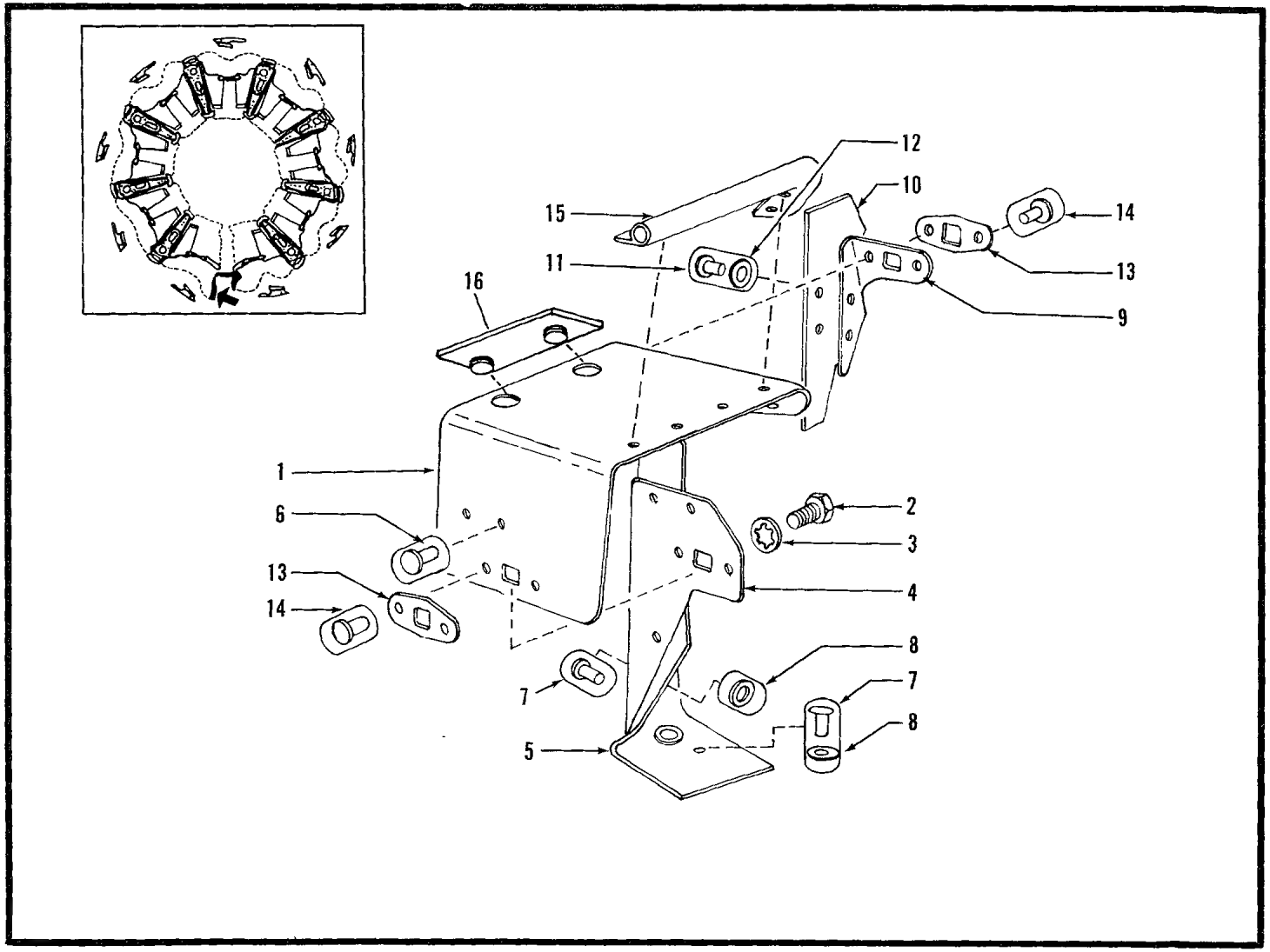

1105

Figure 195. Intercylinder Air Deflector

1106

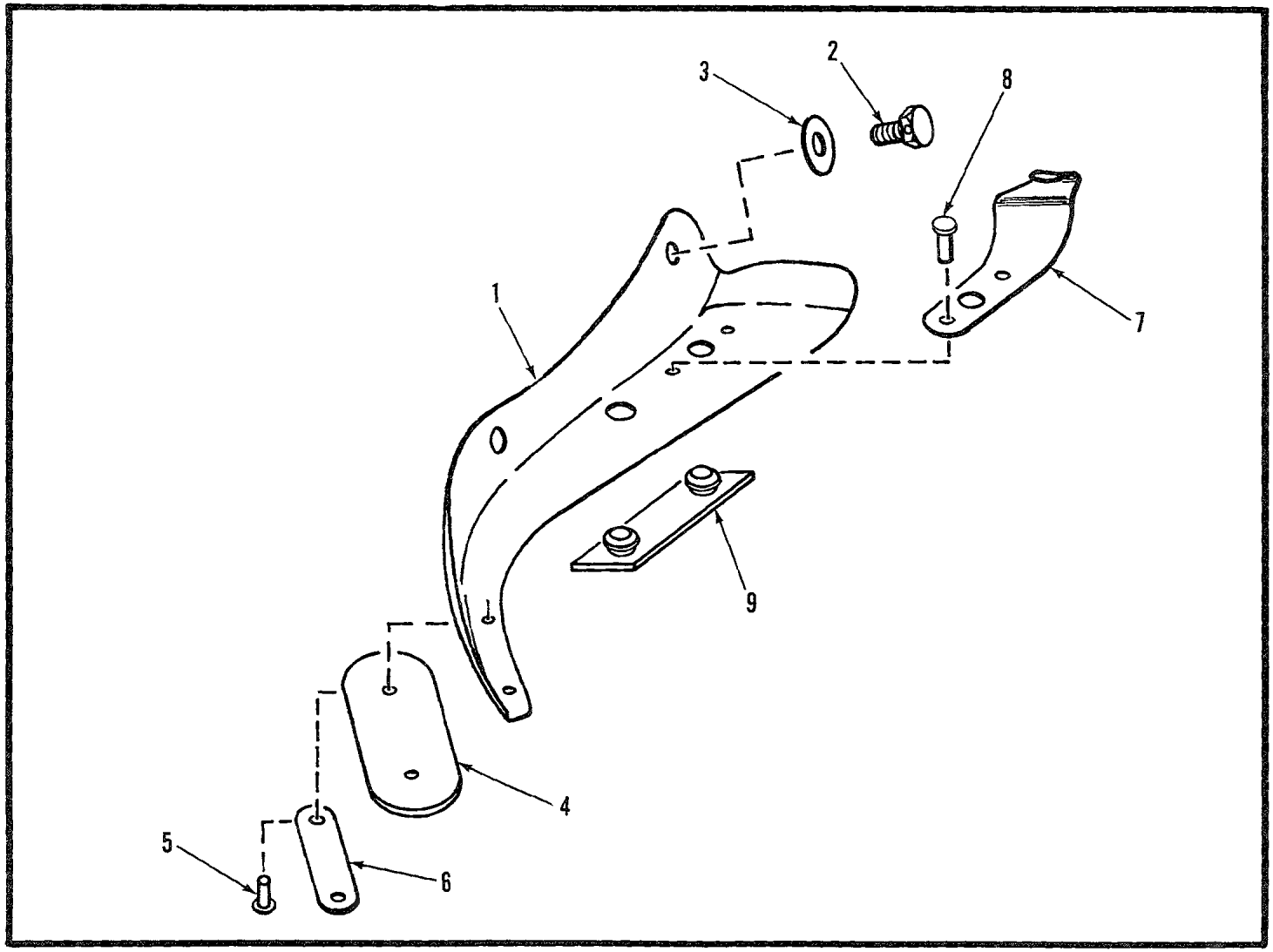

1106

Figure 196. Deflector Assembly, Sump-Left Hand

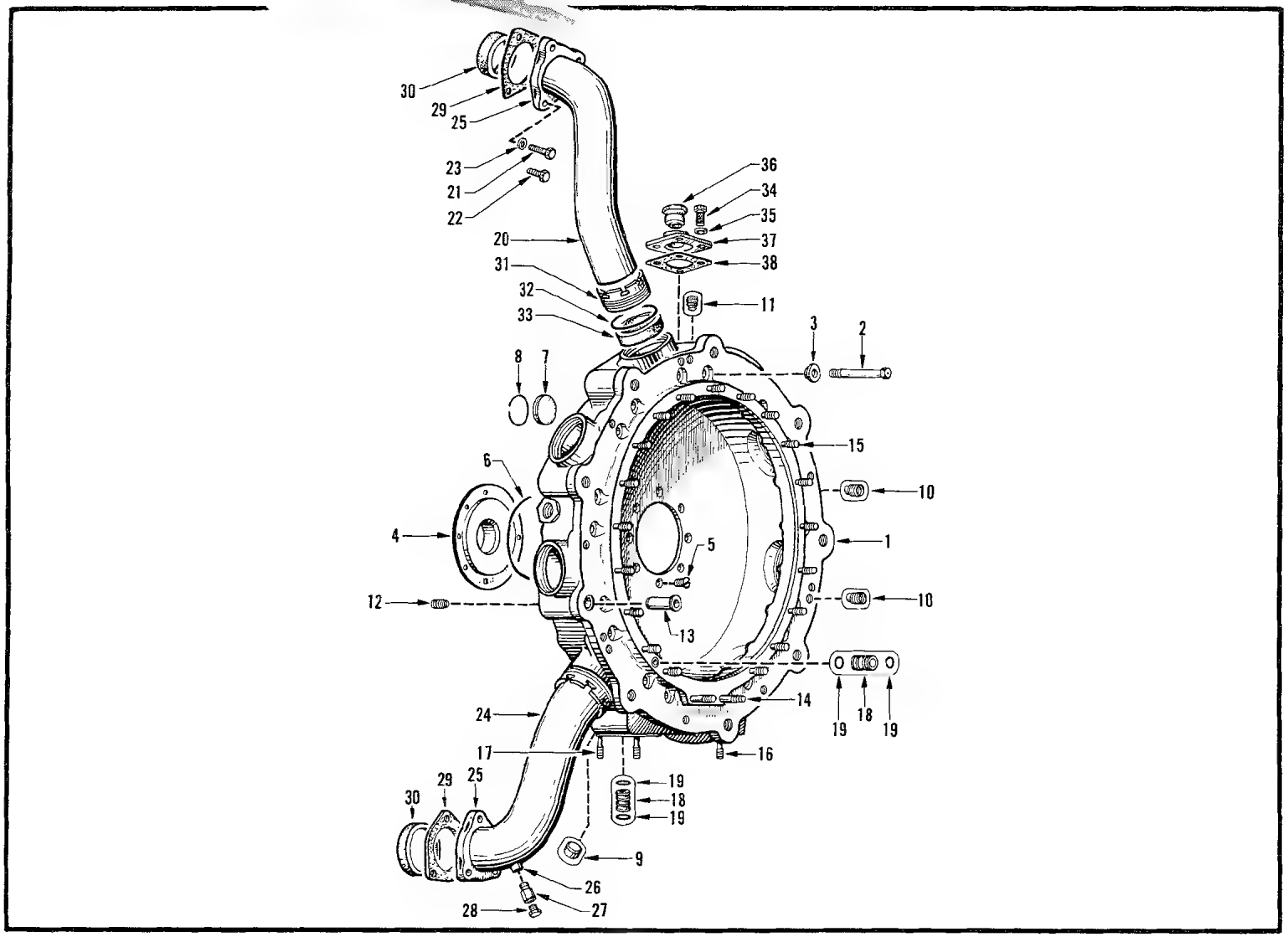

Figure 198. Supercharger Front Housing and Intake Pipes

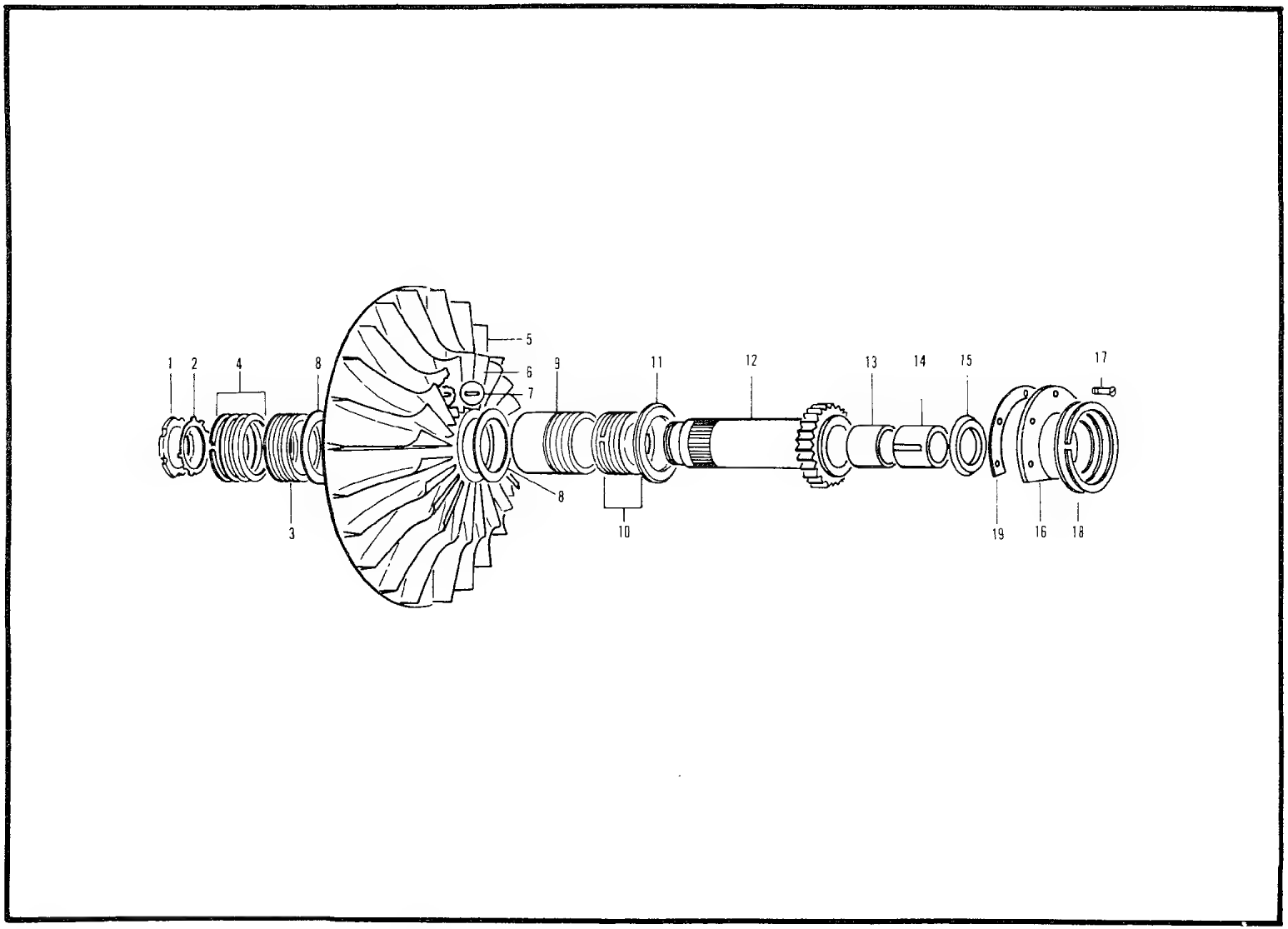

Figure 199. Impeller and Impeller Shaft

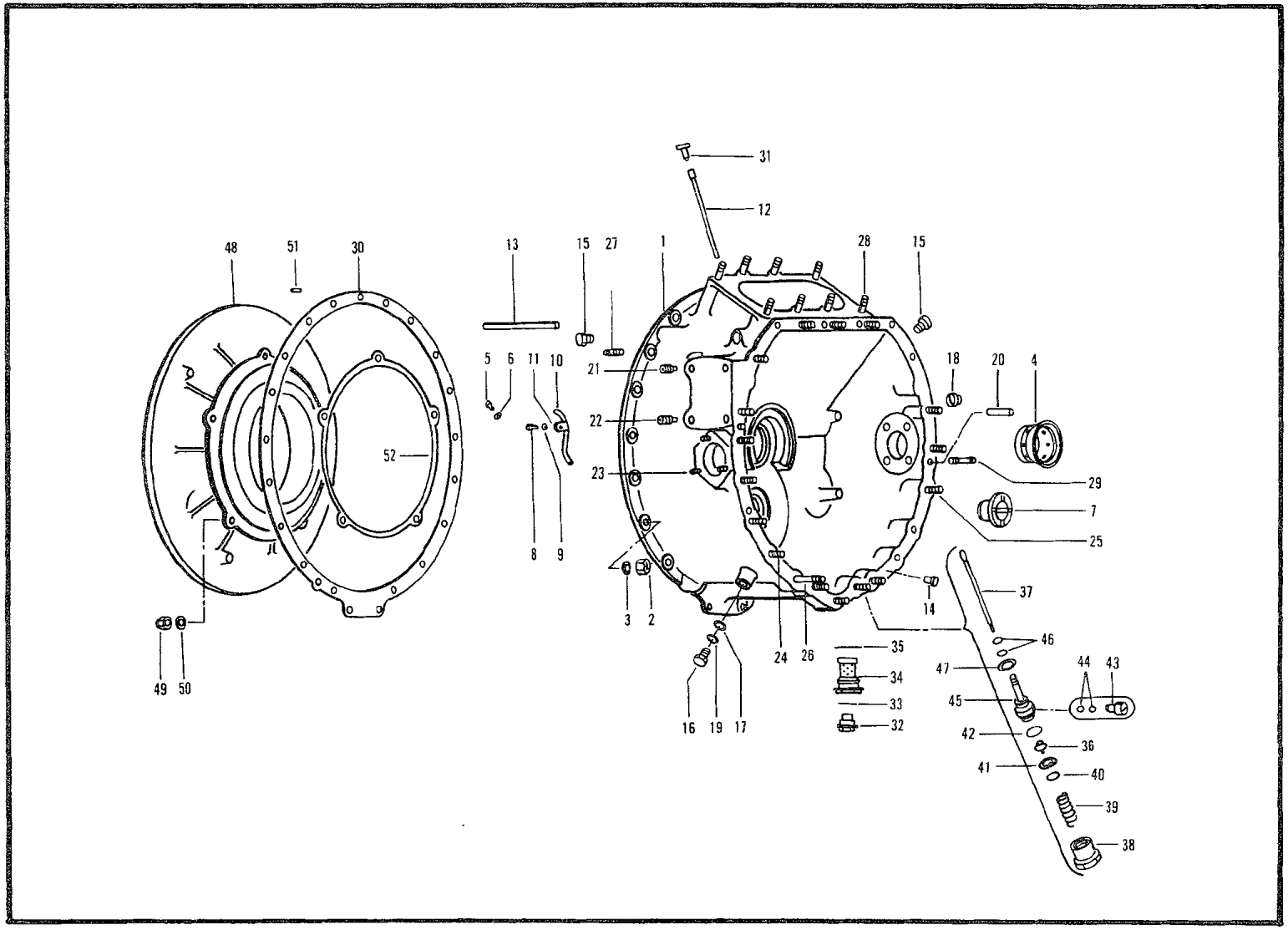

Figure 200. Housing and Studding Assembly-Supercharger, Rear

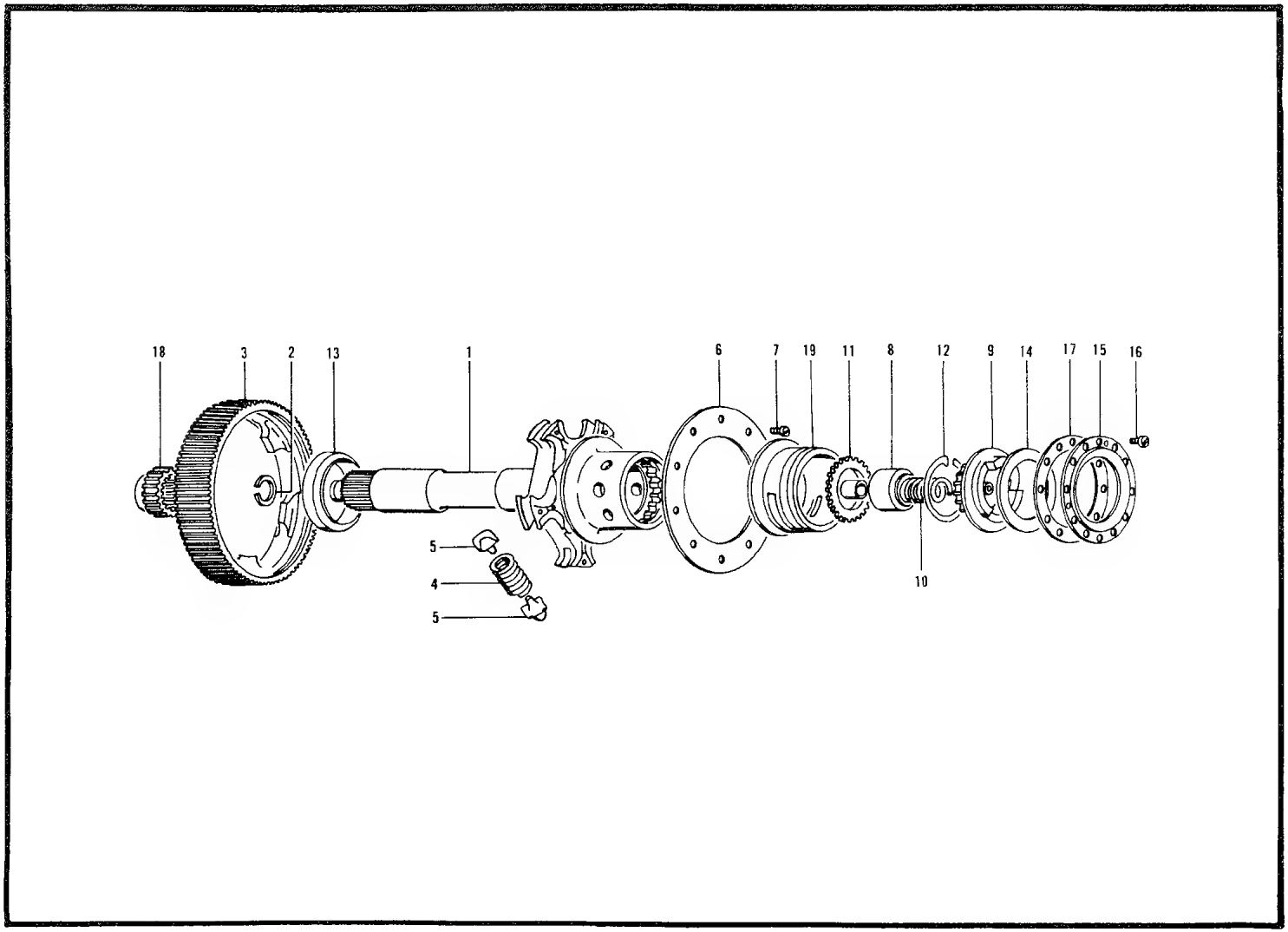

1111

Figure 201. Shaft, Accessory Drive and Starter

Figure 202 Not Used In TM55-1520-202-35P

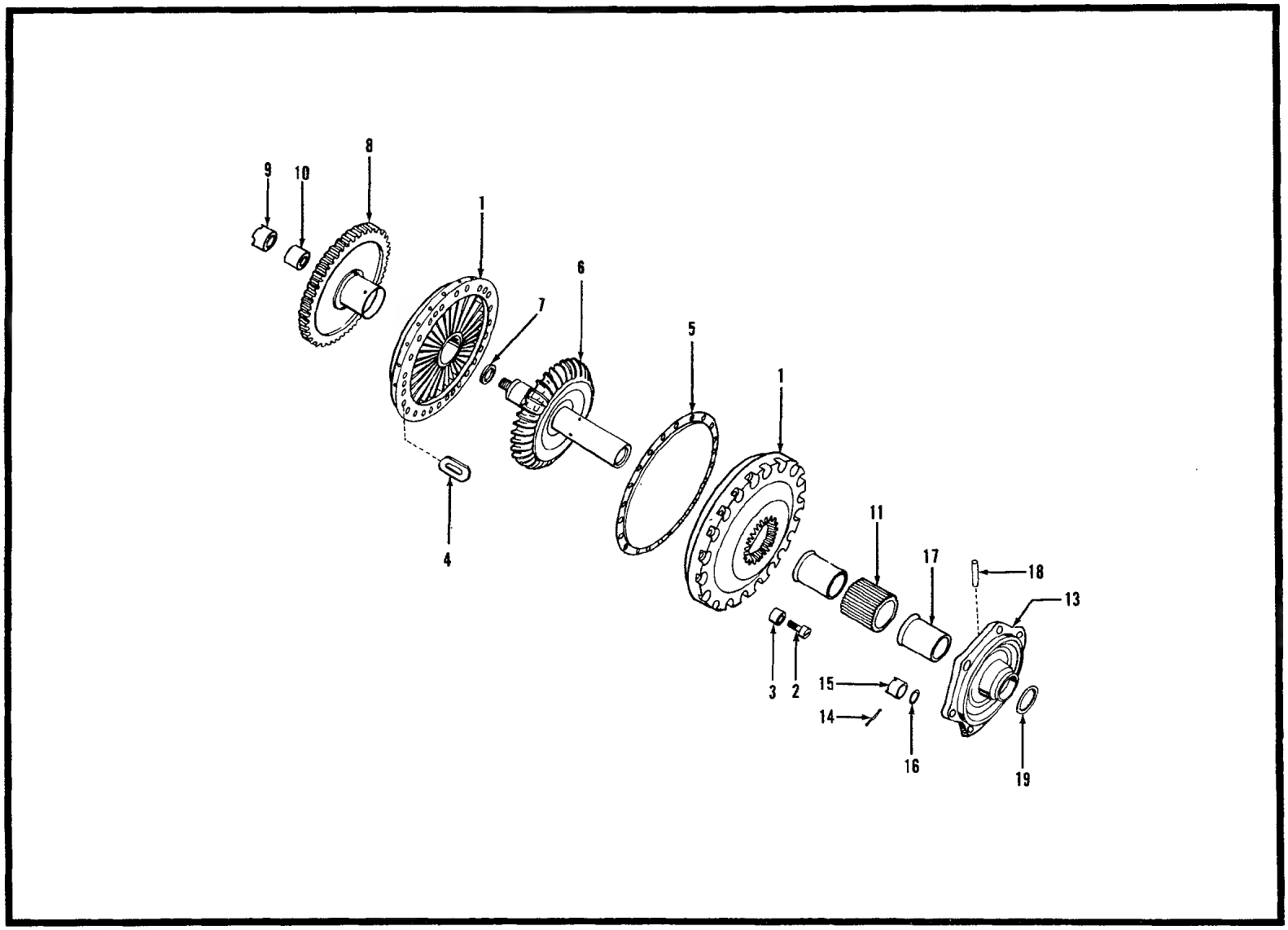

Figure 202A. Impeller Drive Fluid Coupling

1113

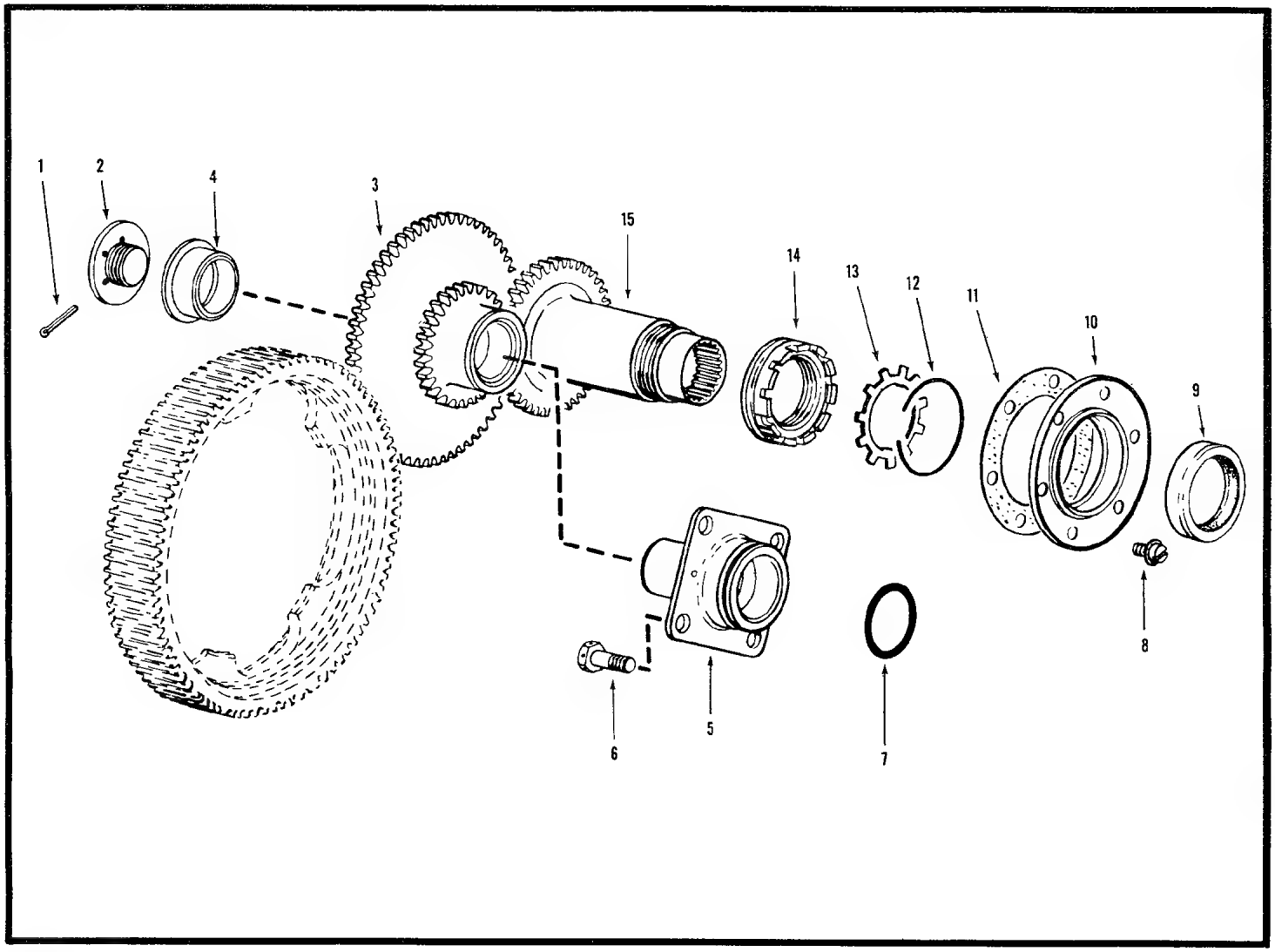

1113

Figure 203. Magneto Drive

1114

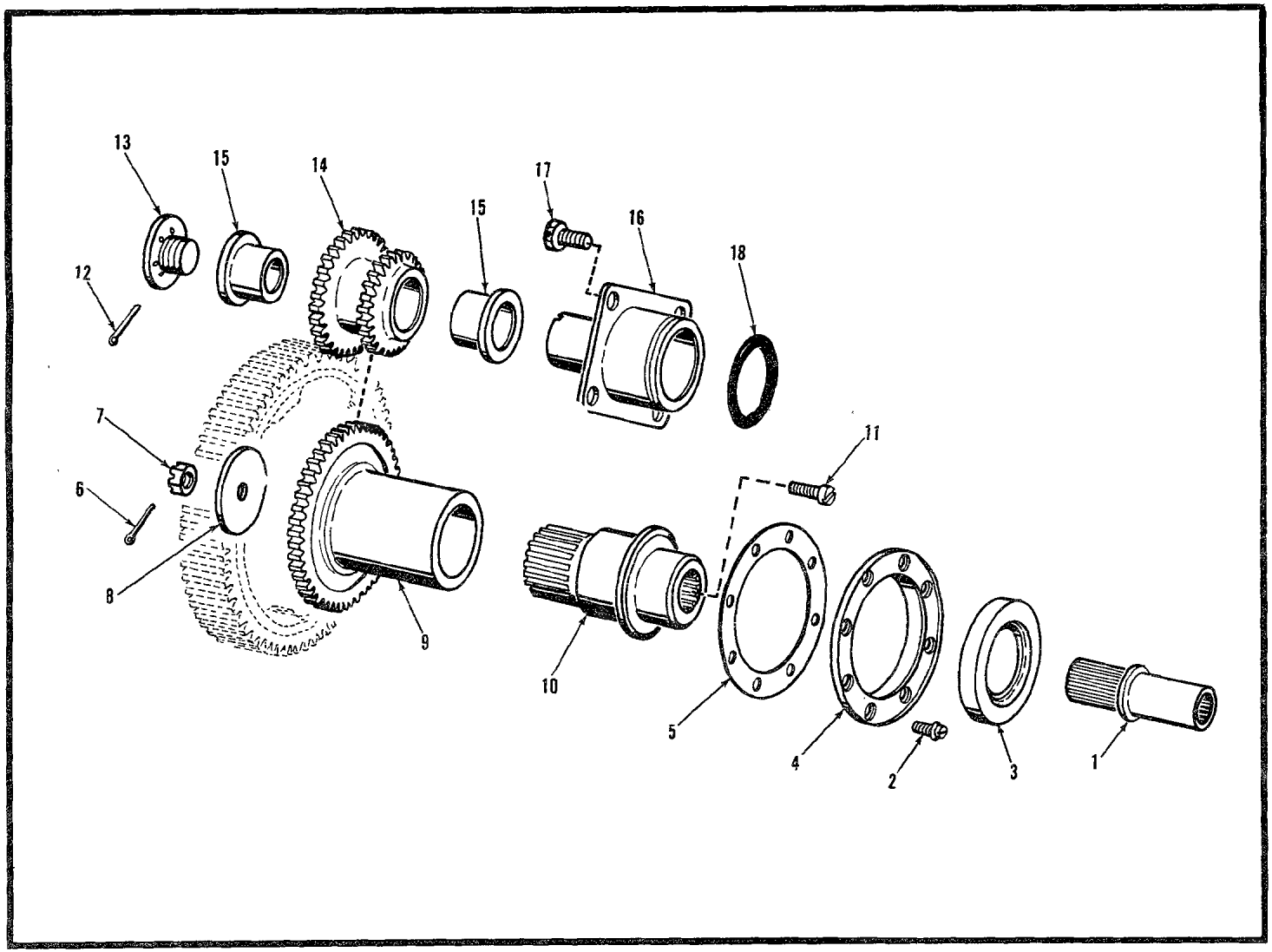

1114

Figure 204. Fluid Power Coupling Drive

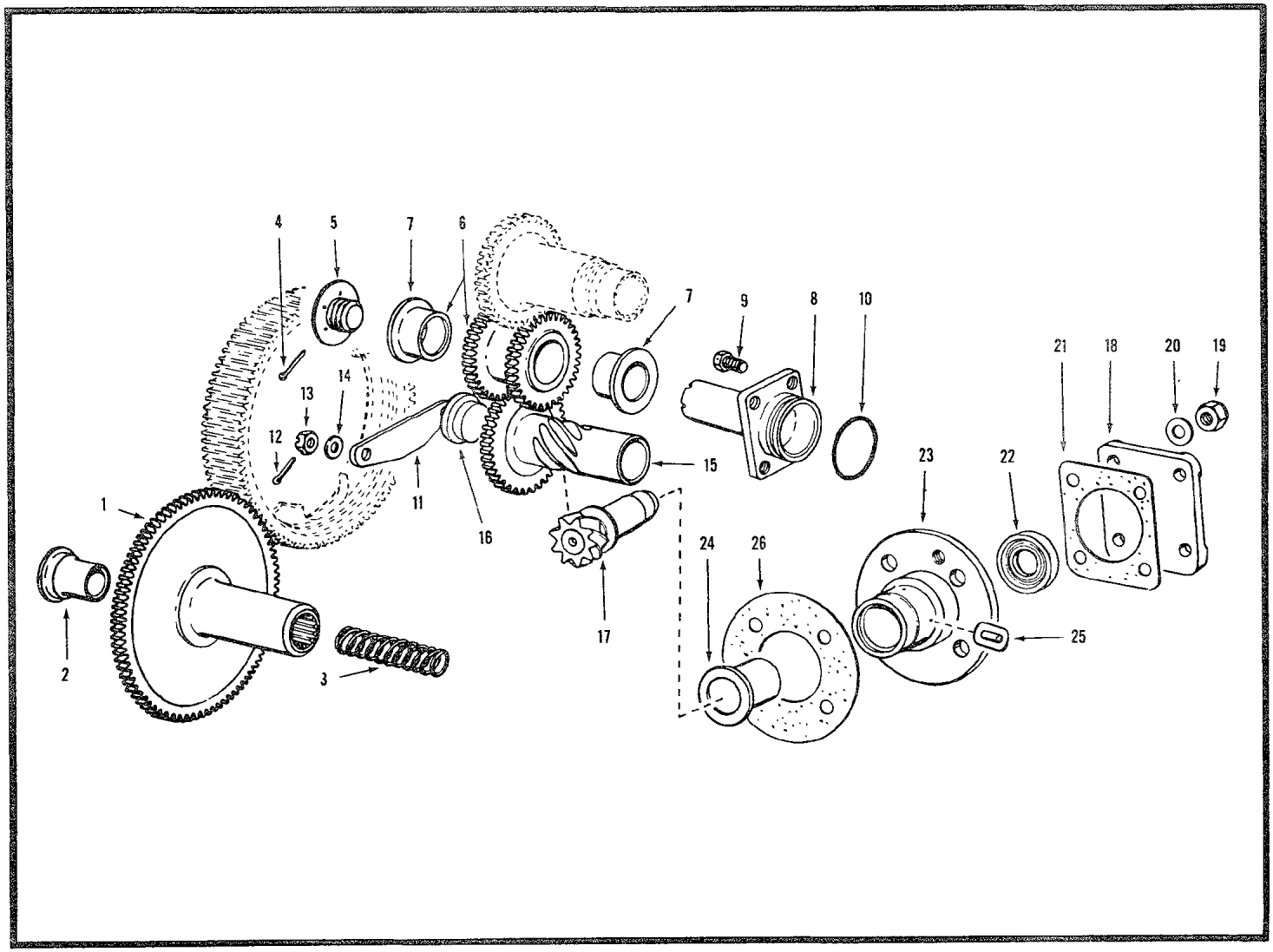

Figure 205. Oil Pump and Fuel Pump Drives

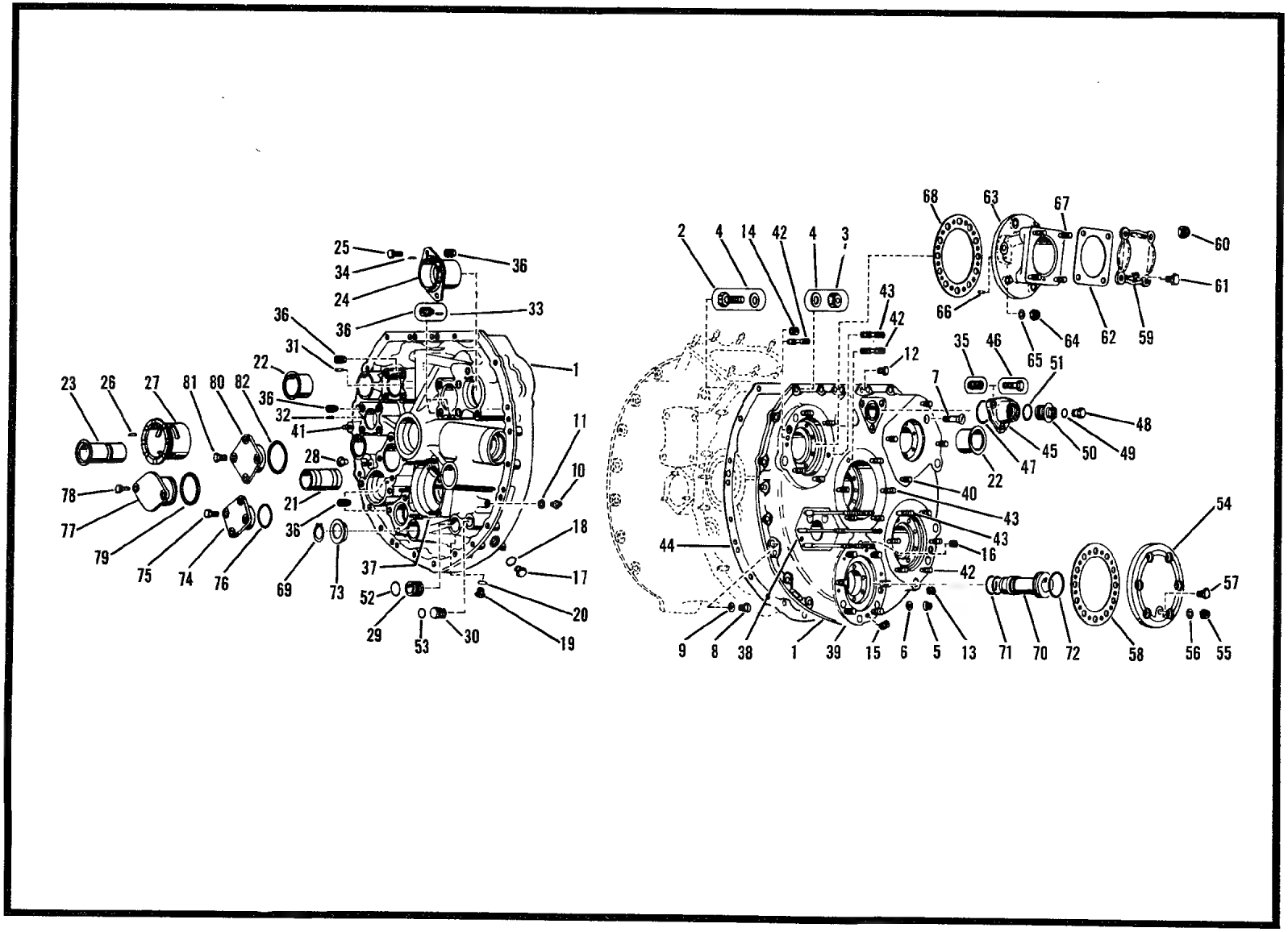

Figure 206. Cover, Machine Assembly-Supercharger Rear

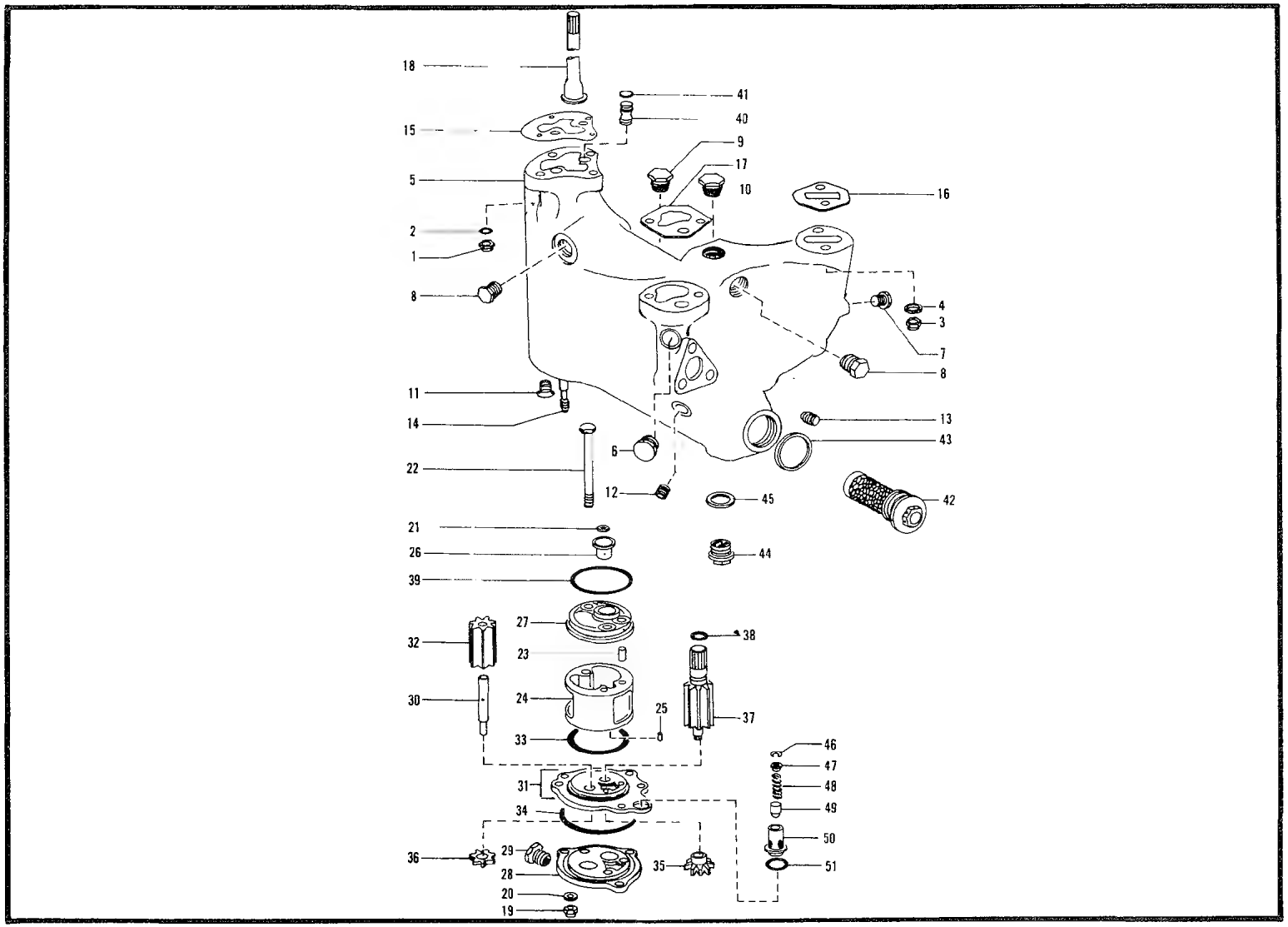

Figure 207. Front Oil Sump and Pump

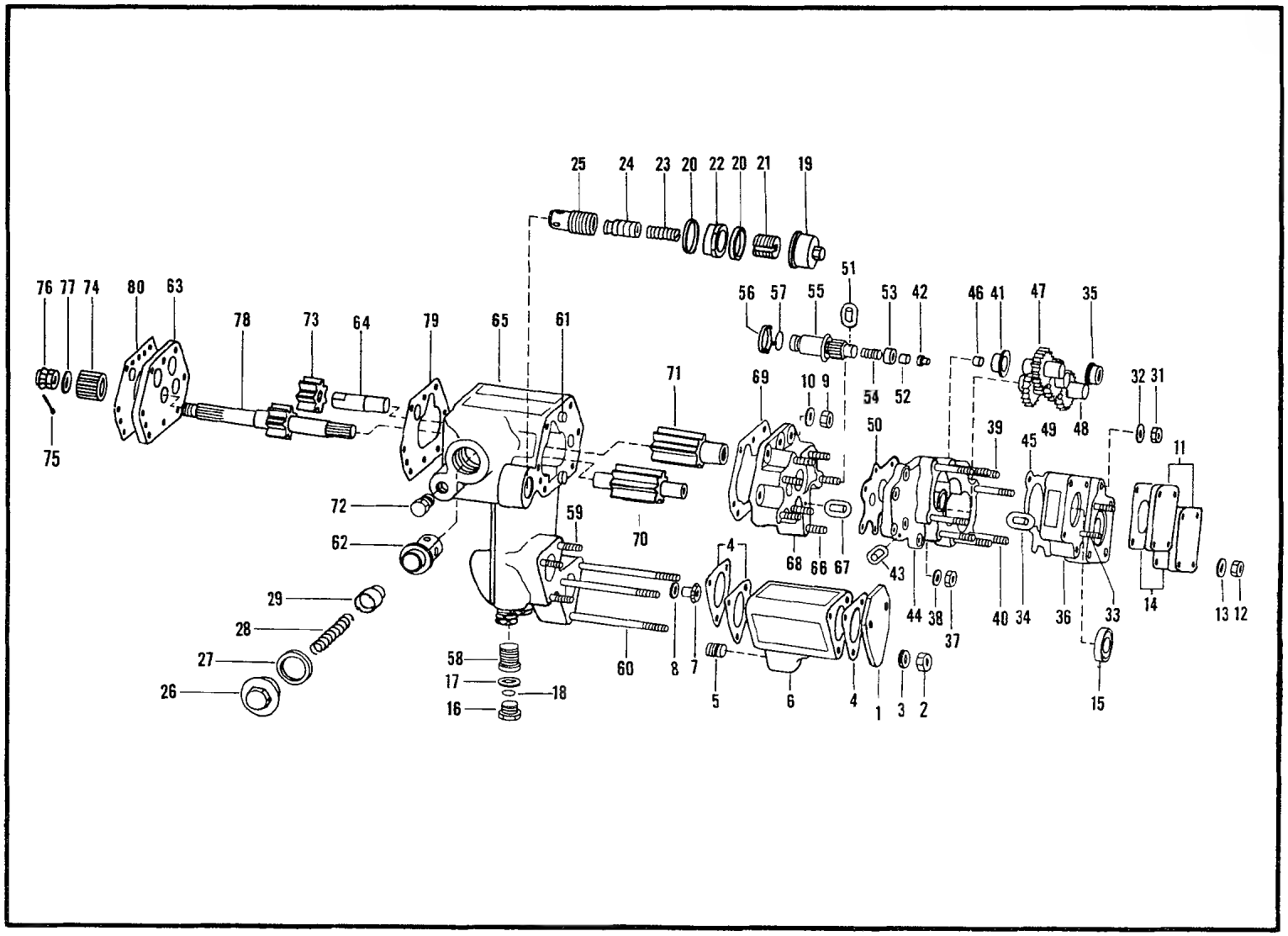

Figure 208. Rear Oil Pump

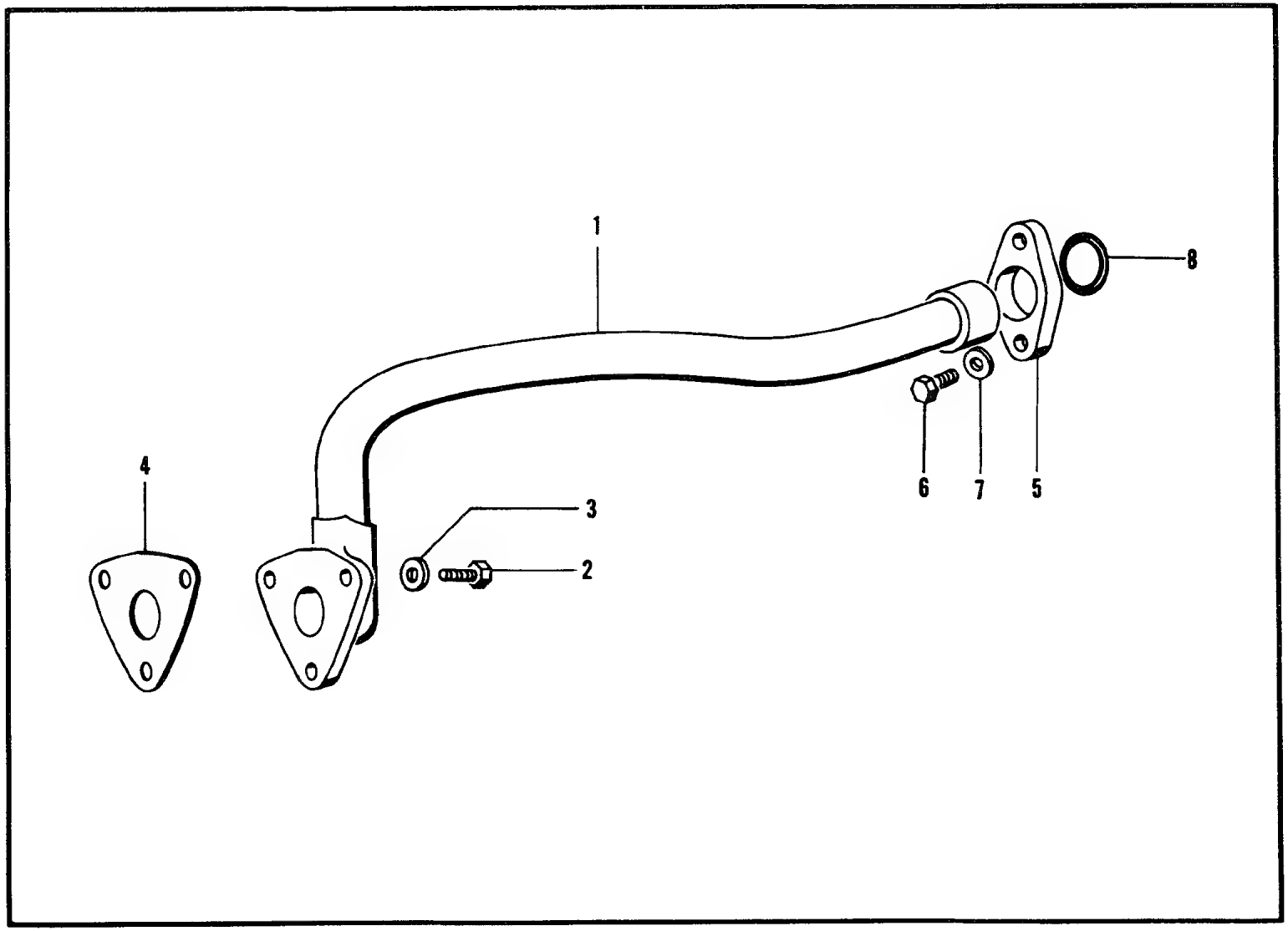

Figure 209. Tube Assembly, Sump External

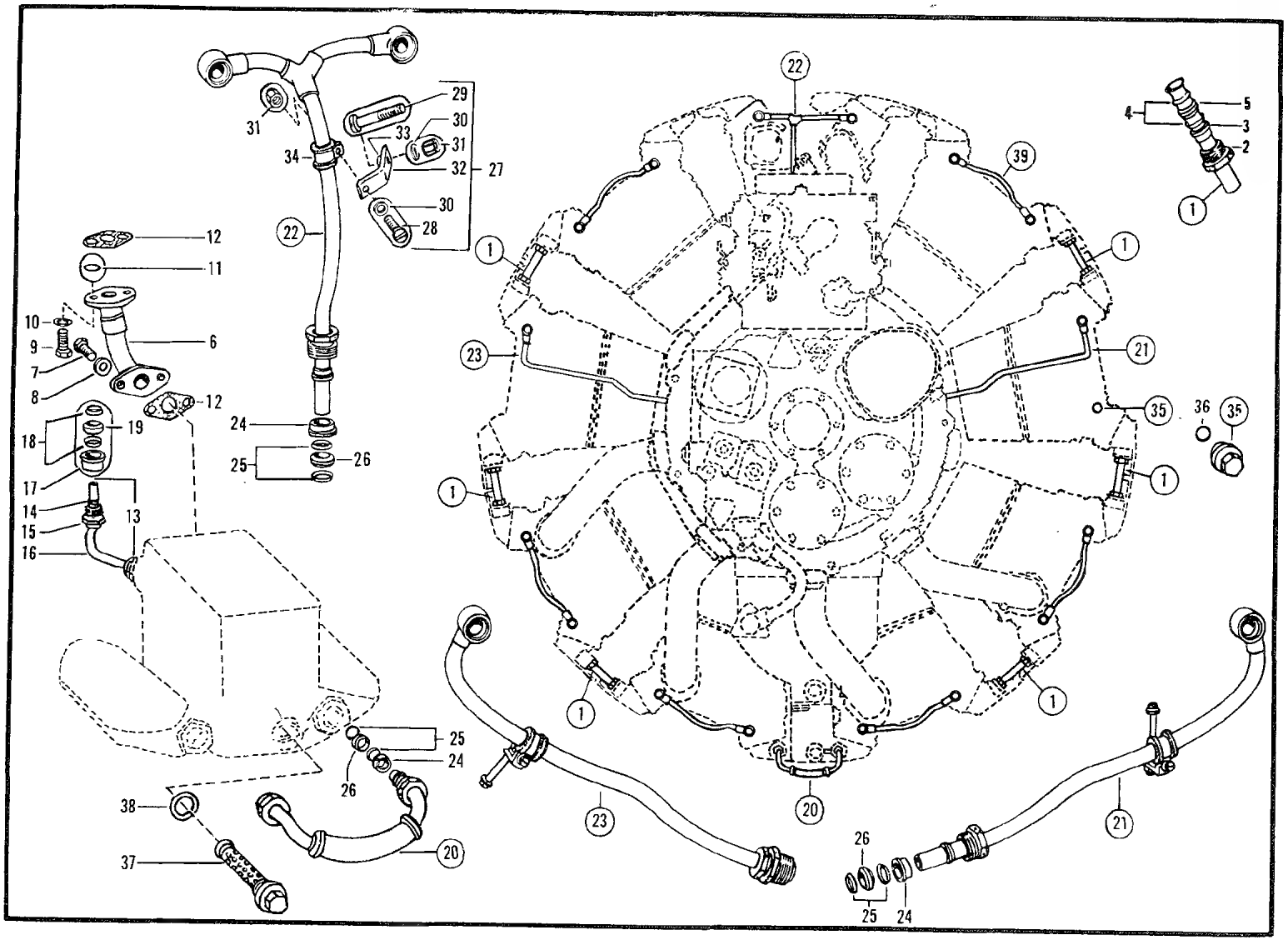

Figure 210. Rocker Box Drain System

1121

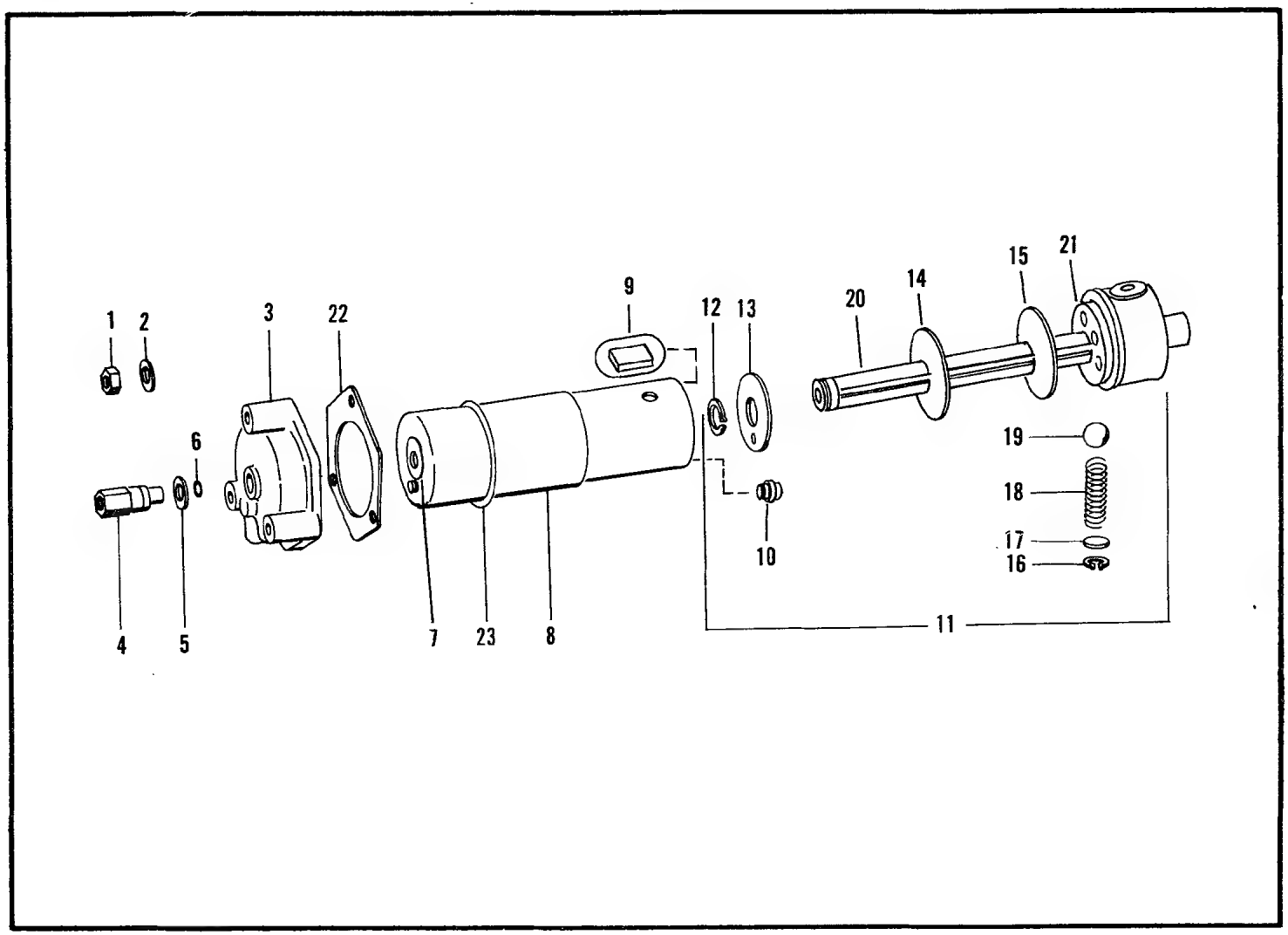

1121

Figure 211. Strainer Assembly

Figure 212 Not Used IN TM55-1520-202-35P

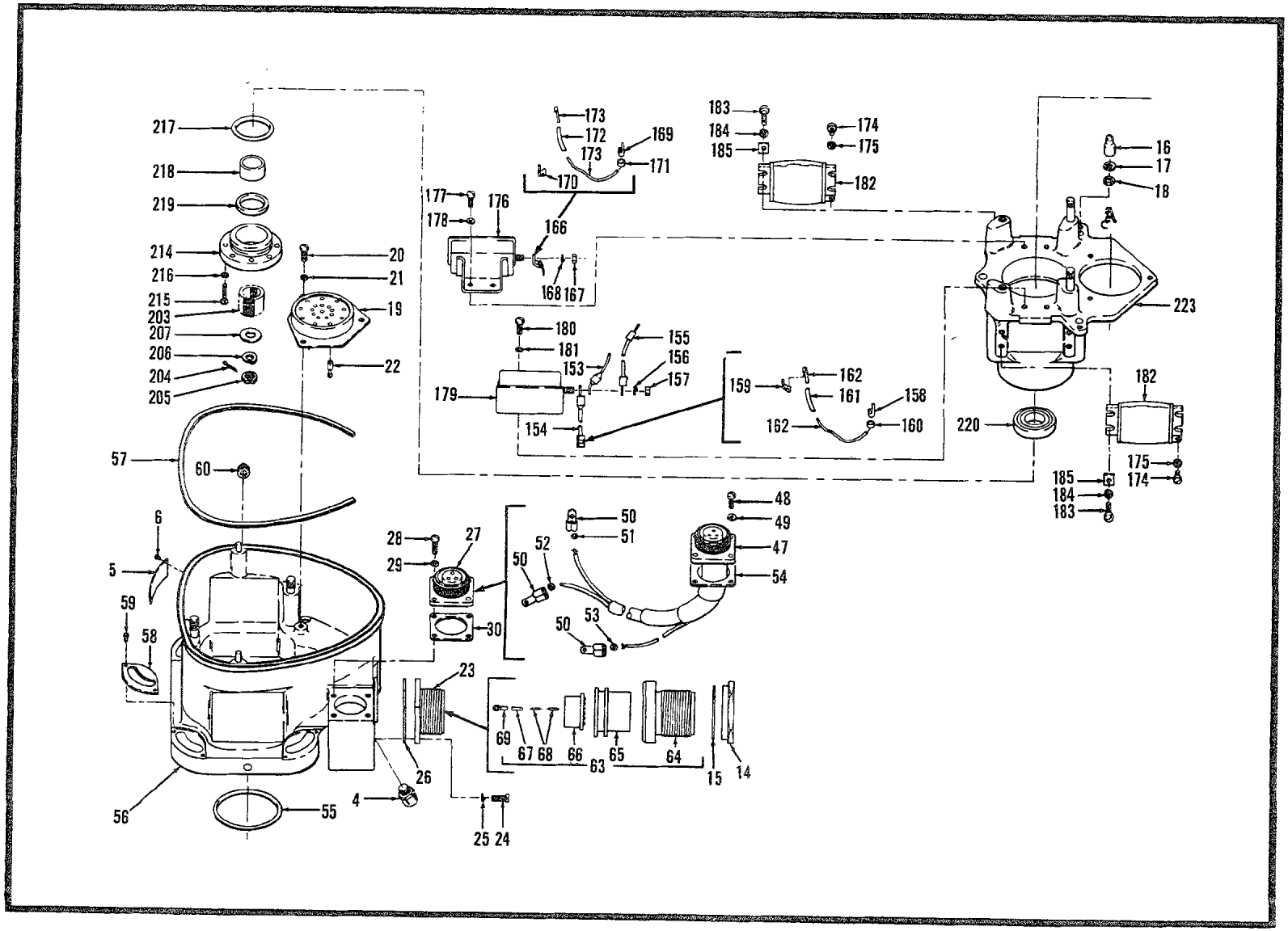

FIGURE 212A. MAGNETO, IGNITION (1 of 2)

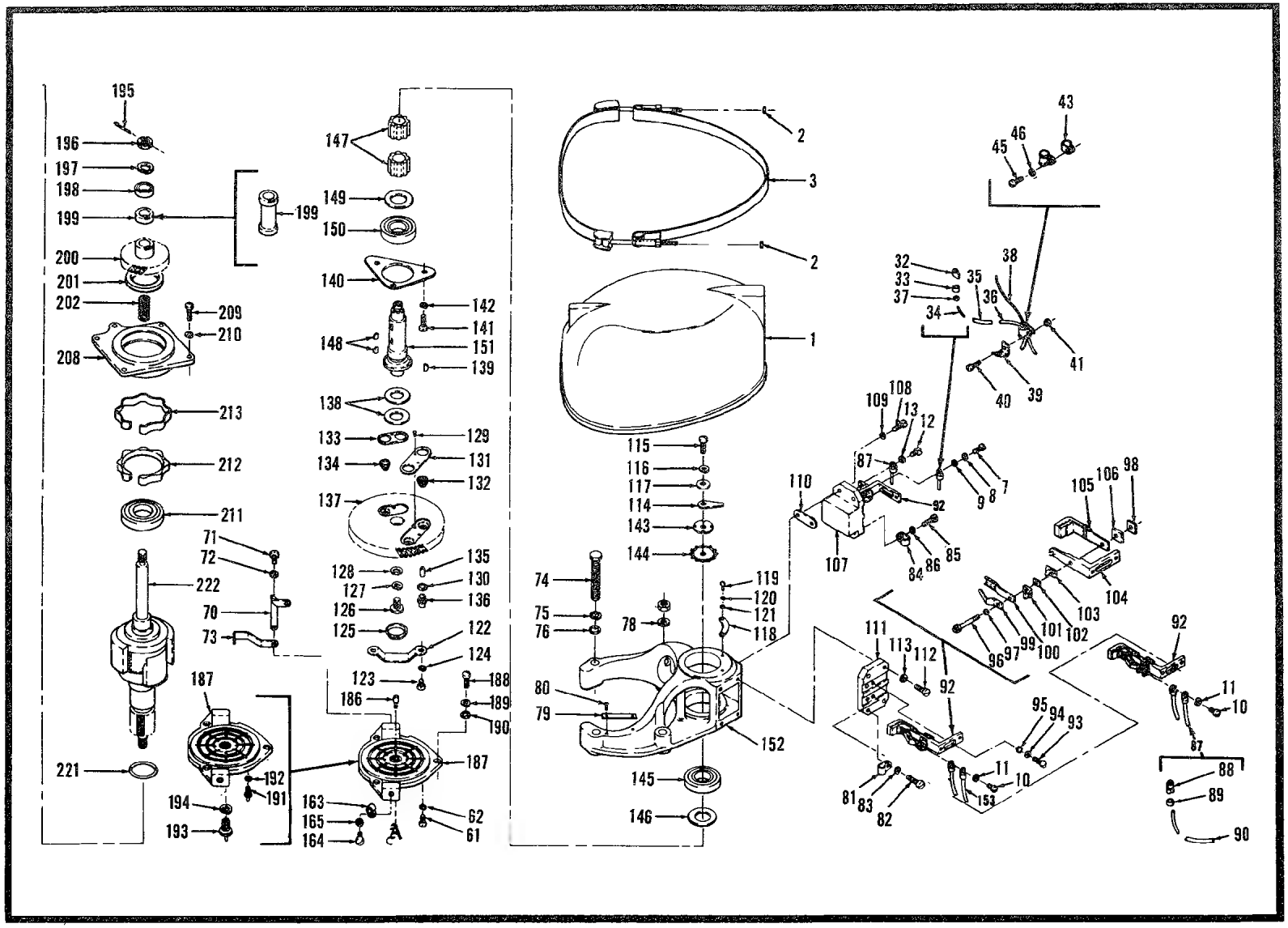

Figure 212A. Magneto, Ignition (Sheet 2 of 2)

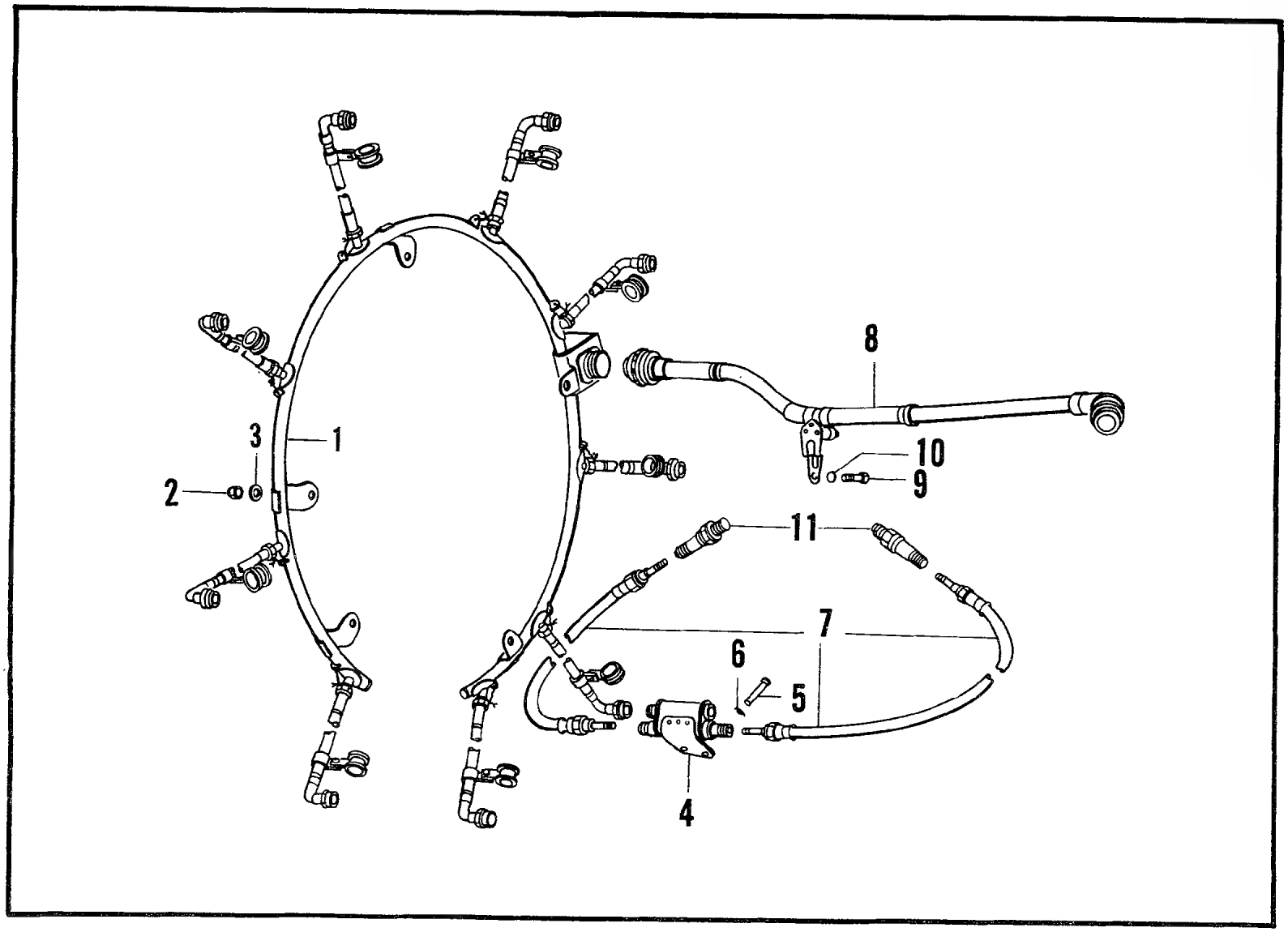

Figure 213. Ignition Cable, Coils and Spark Plugs

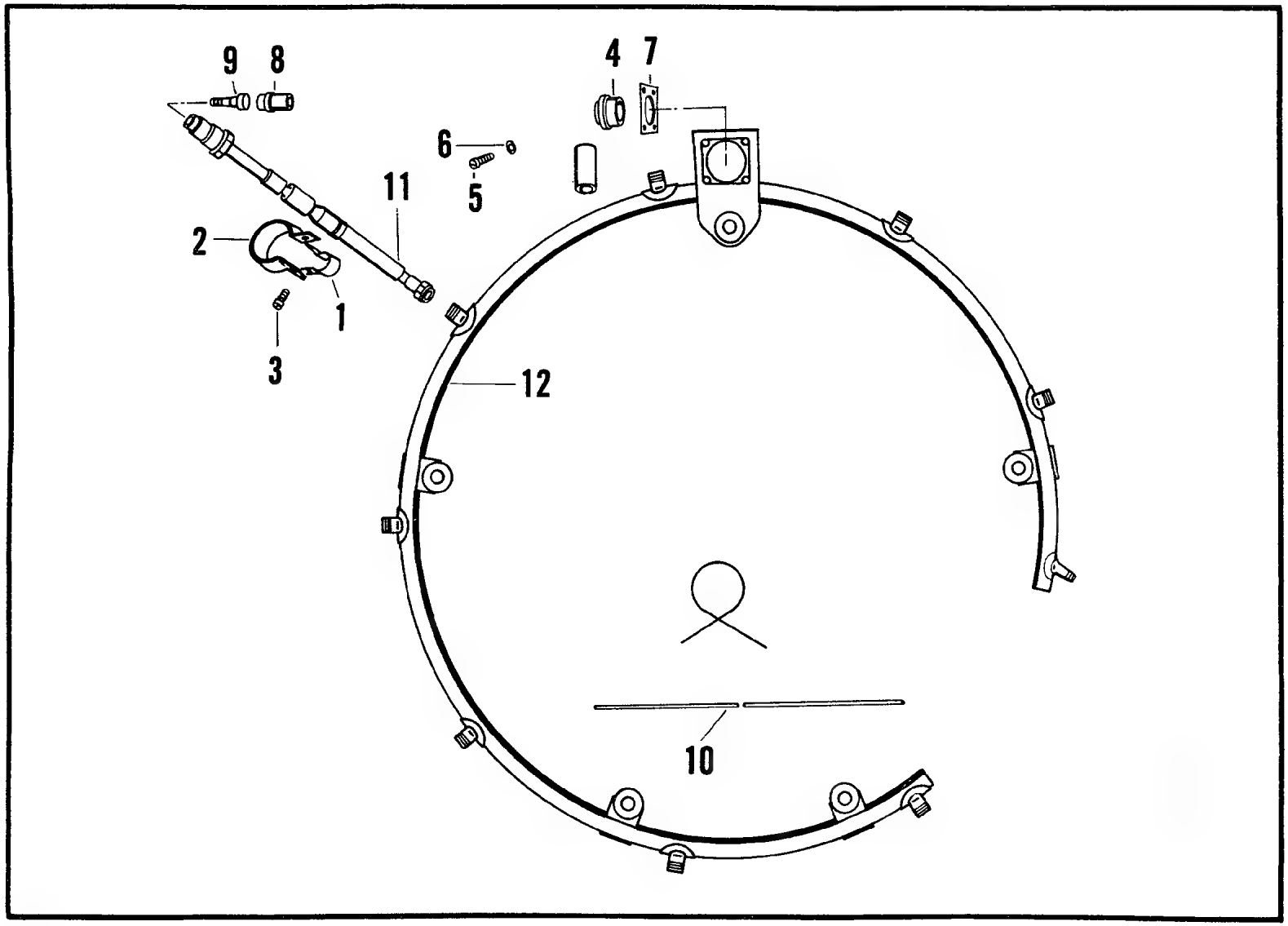

Figure 213A. Ignition Harness Assembly

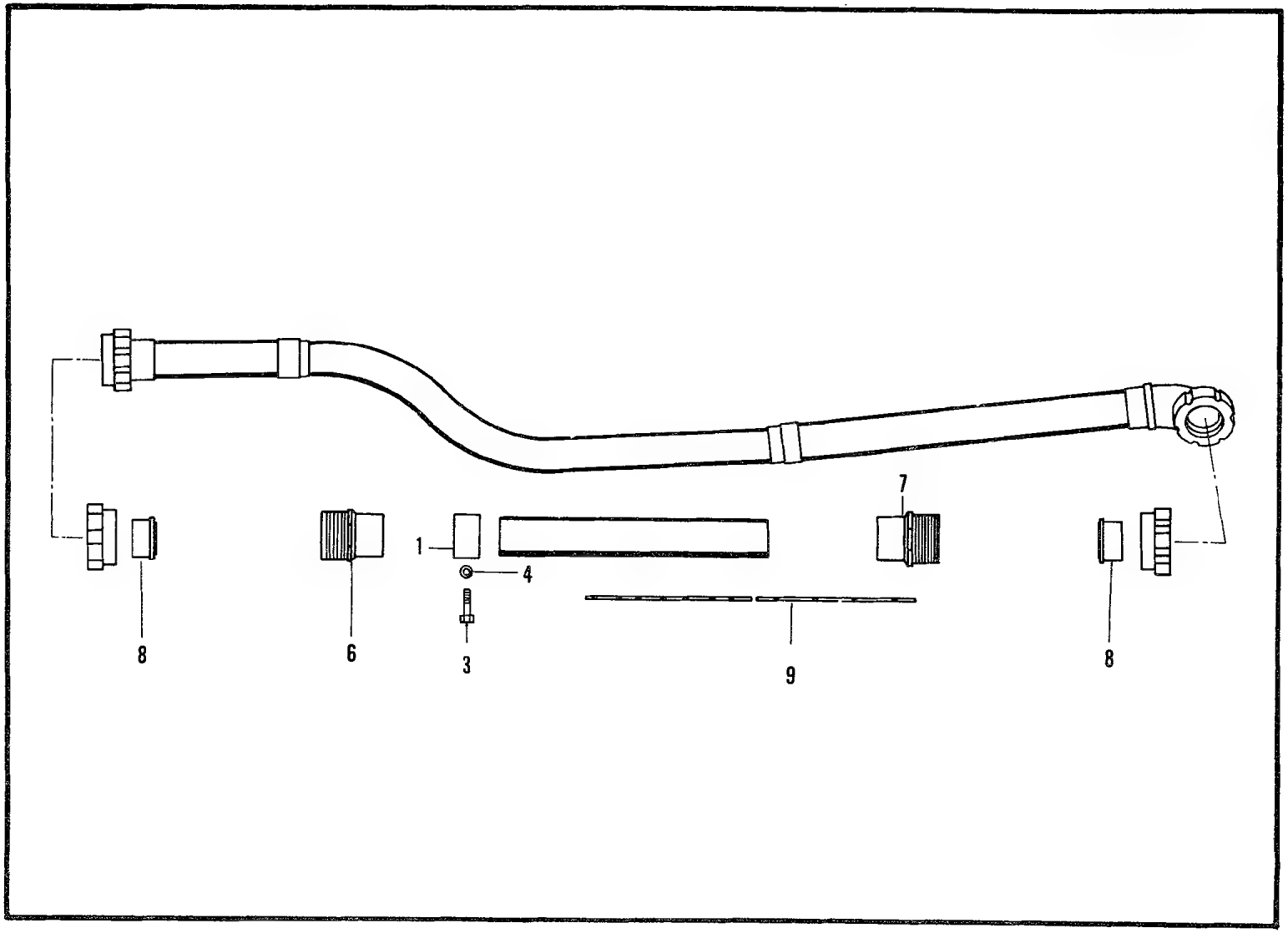

Figure 213B. Lead Assembly, Magneto

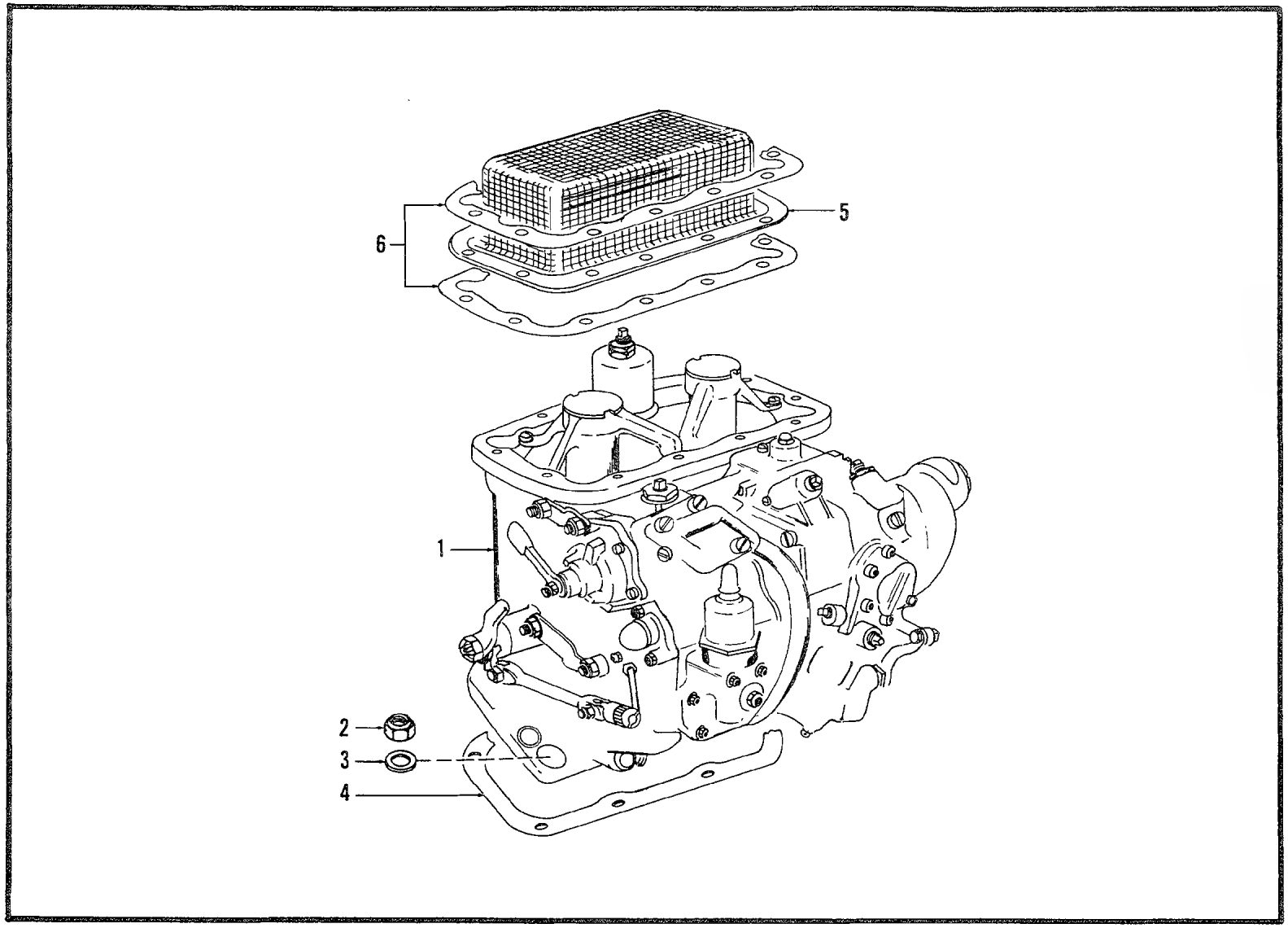

Figure 214. Carburetor and Air Inlet Screen

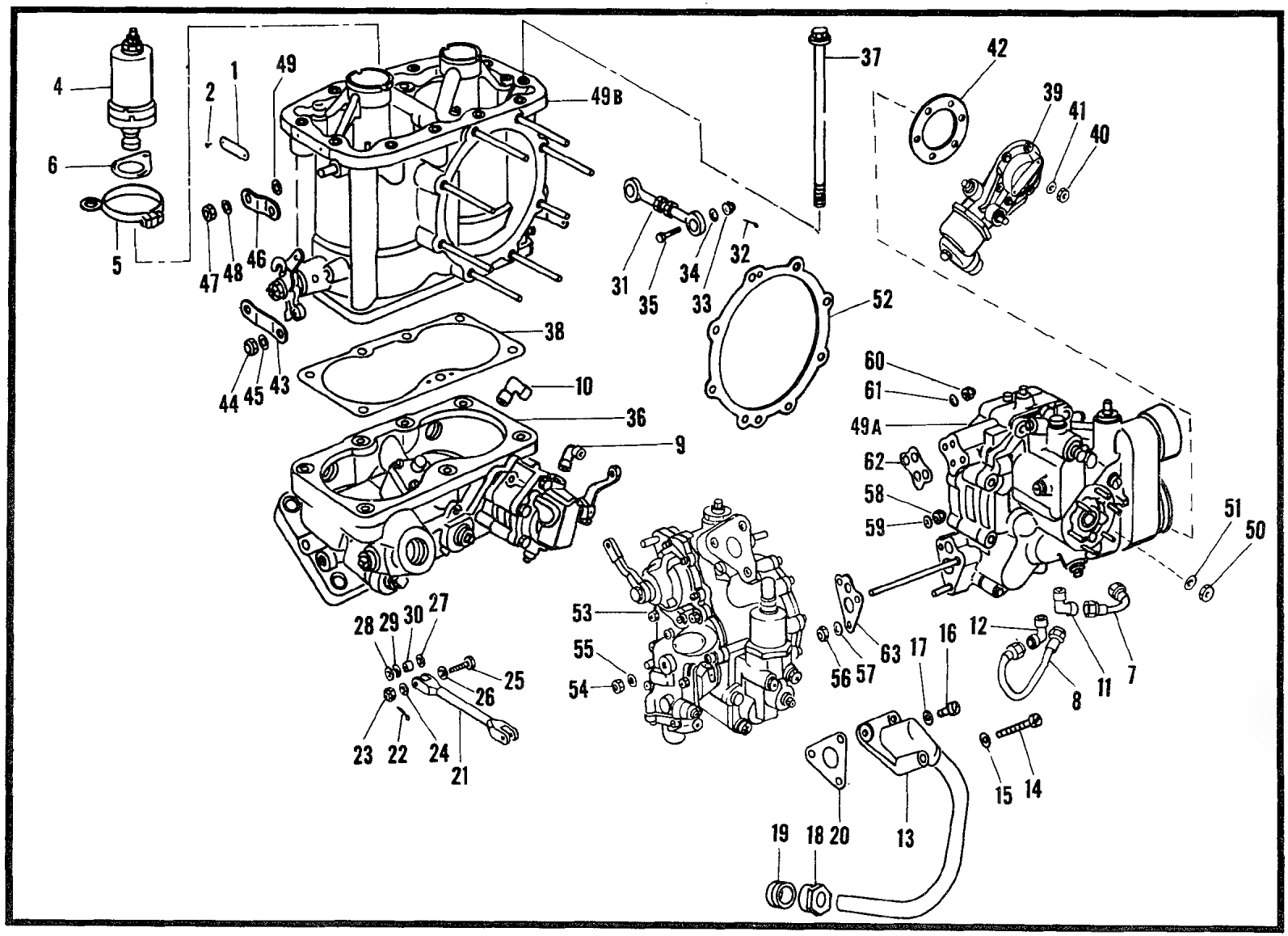

Figure 214A. Carburetor and Adapter Assembly (Sheet 1 of 7)

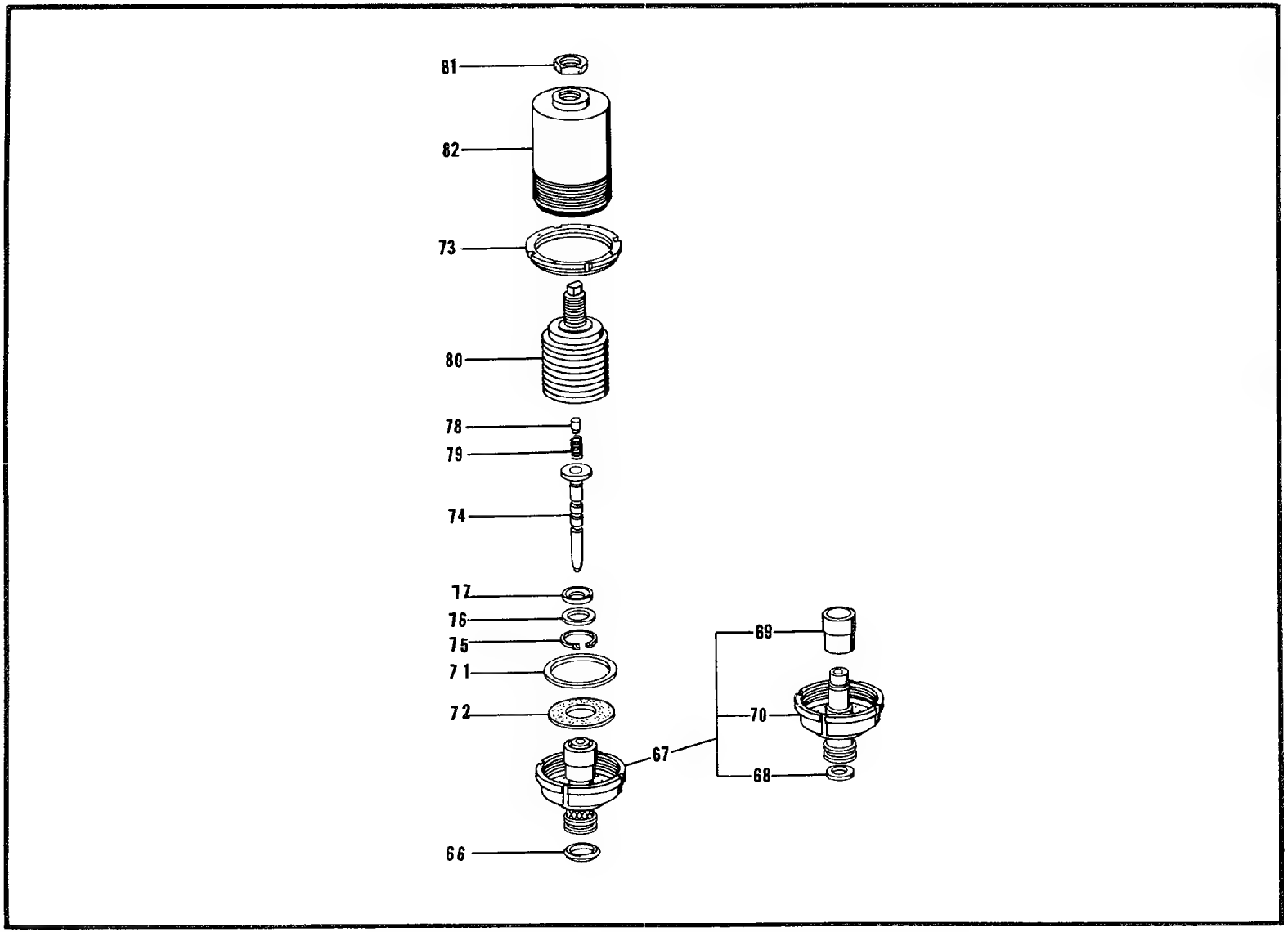

Figure 214A. Carburetor and Adapter Assembly (Sheet 2 of 7)

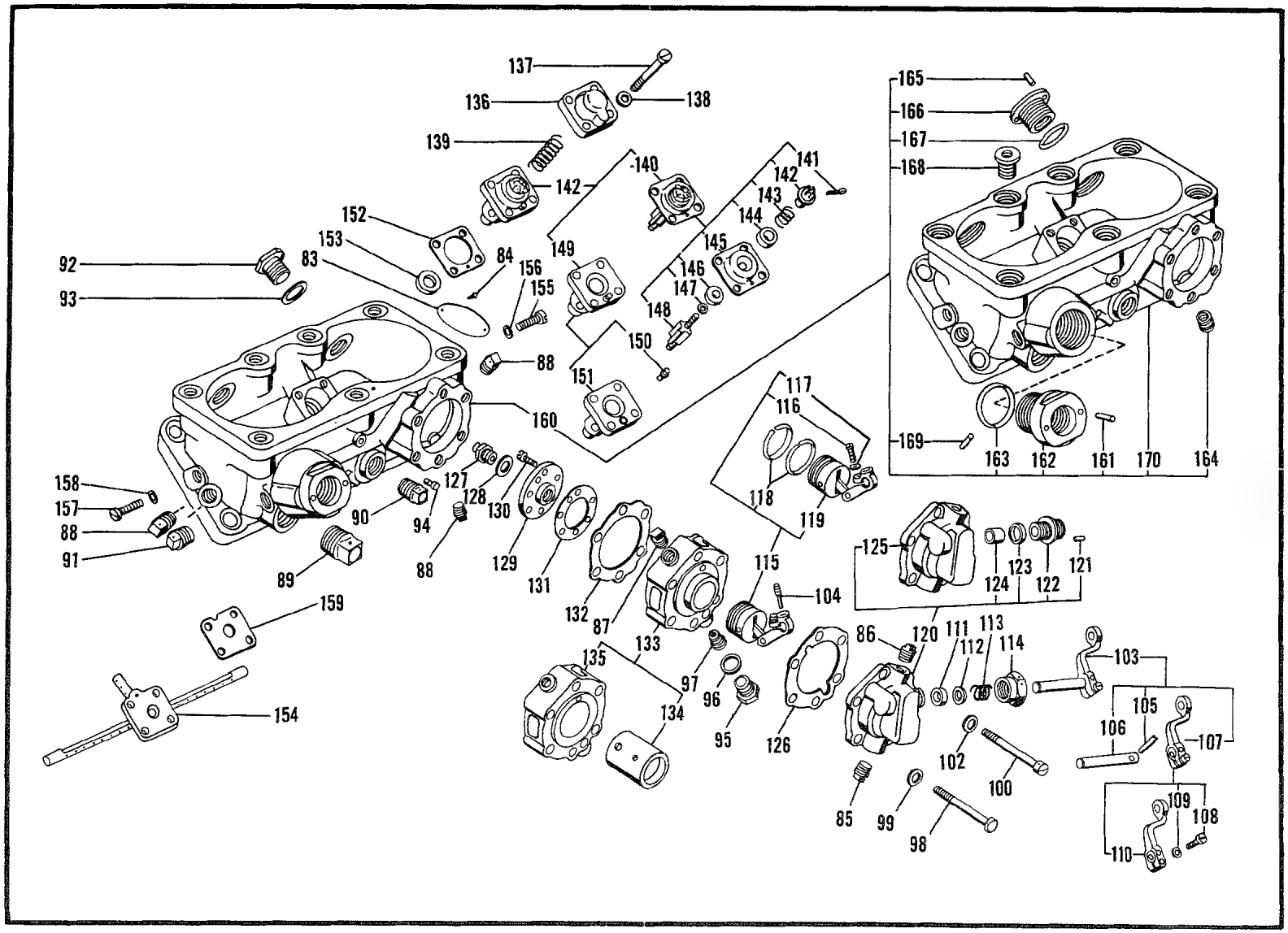

Figure 214A. Carburetor and Adapter Assembly (Sheet 3 of 7)

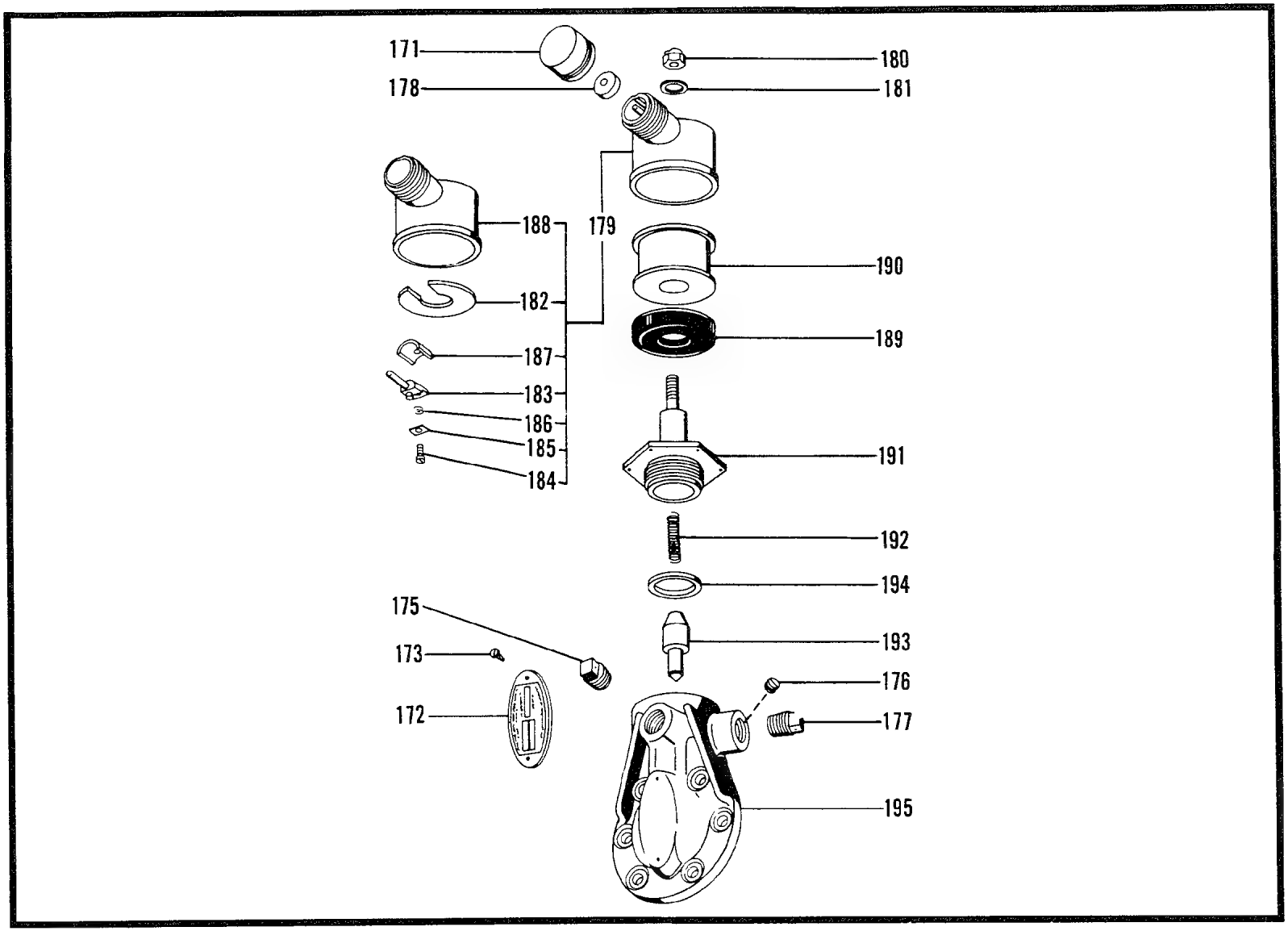

Figure 214A. Carburetor and Adapter Assembly (Sheet 4 of 7)

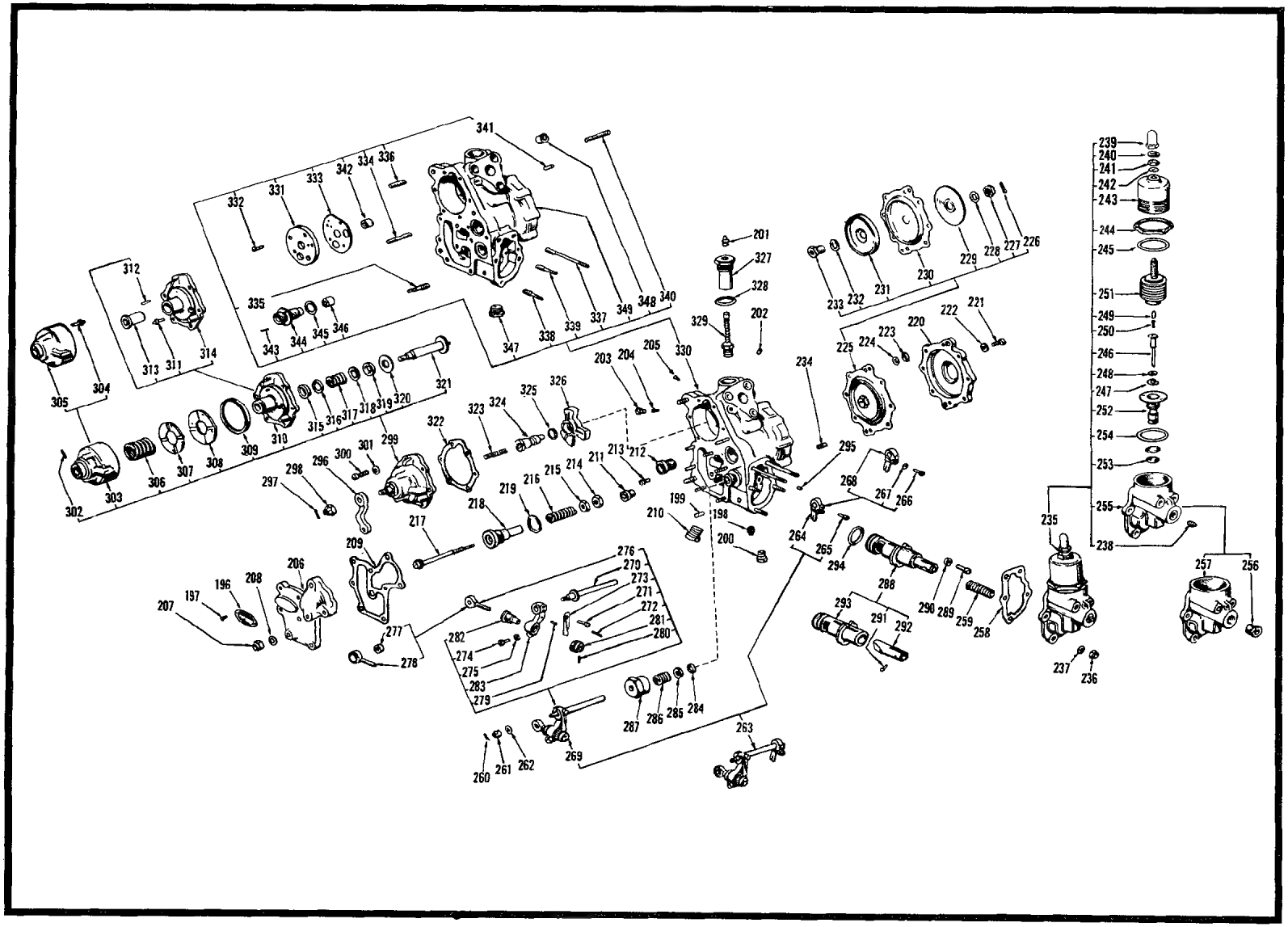

Figure 214A Carburetor and Adapter Assembly (Sheet 5 of 7)

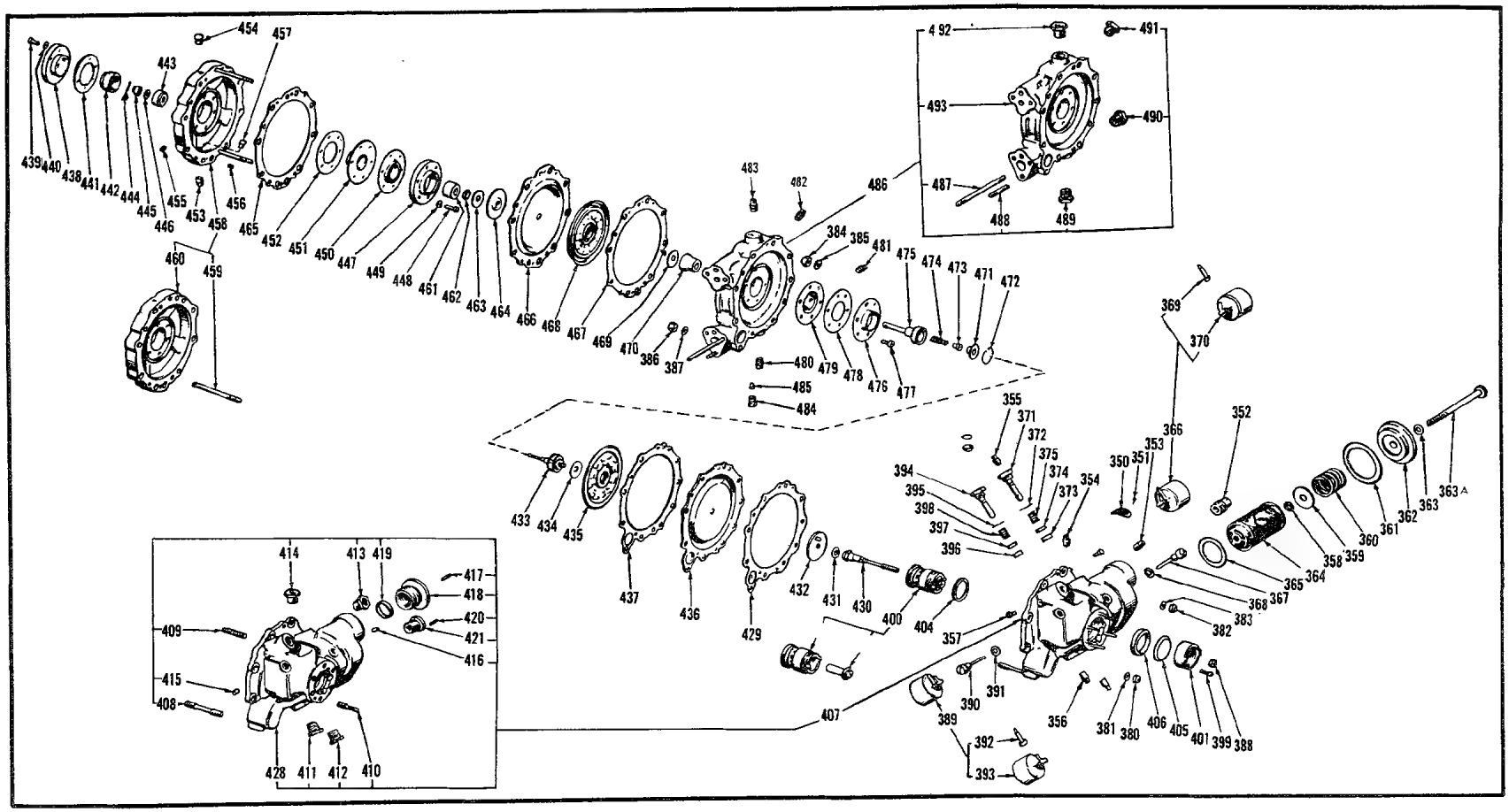

Figure 214A. Carburetor and Adapter Assembly (Sheet 6 of 7)

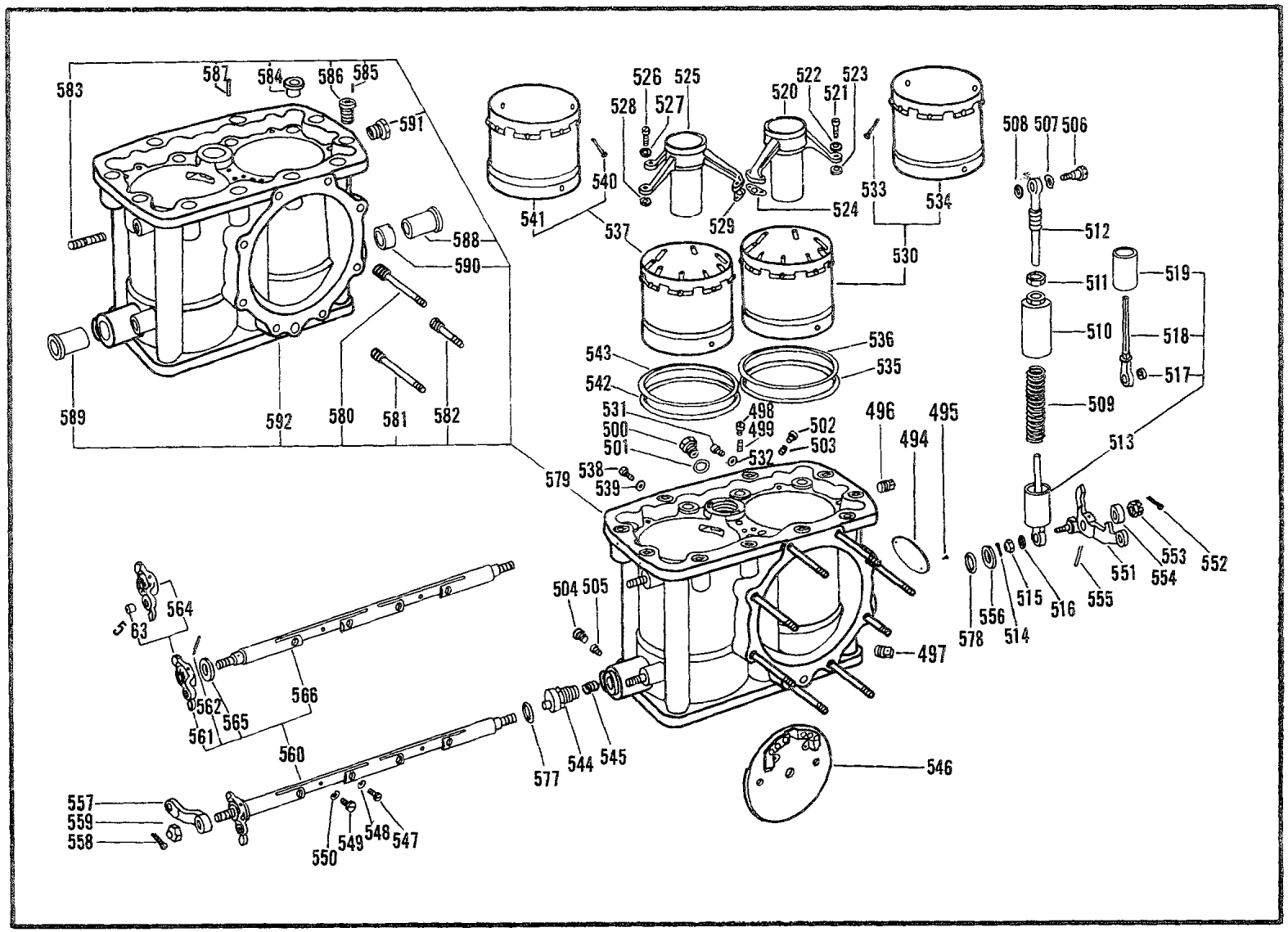

Figure 214A. Carburetor and Adapter Assembly (Sheet 7 of 7)

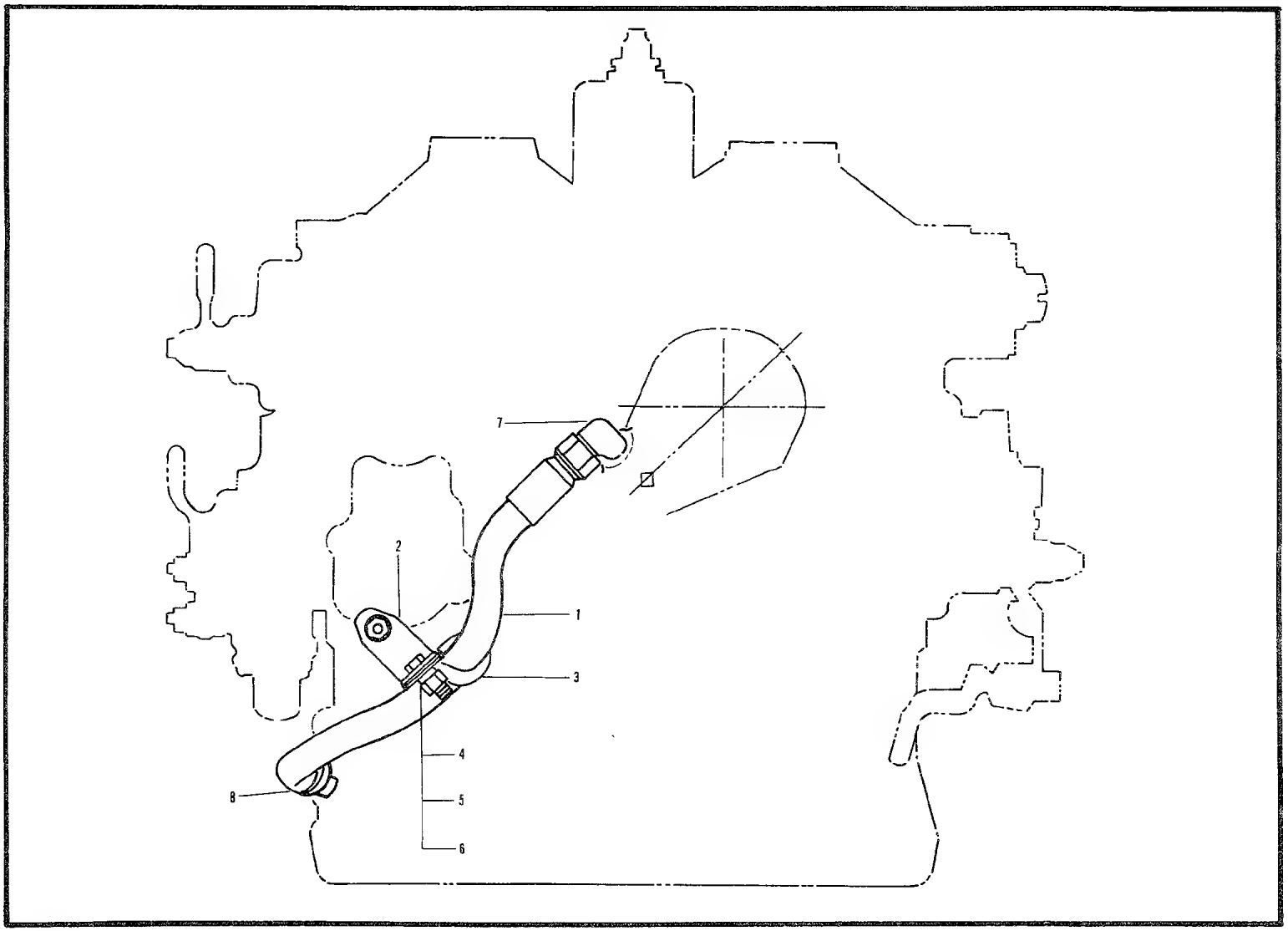

Figure 215. Priming System Assembly

Figure 216 Not Used In TM55-1520-202-35P

1136

SECTION II

FUNCTIONAL GROUP 12

AVIONICS EQUIPMENT INSTALLATION

1136

(1) SOURCE, MAINT AND REC CODE (a) SOURCE CODE	(b) MAINT LEVEL	(c) RECOV CODE	(2) FEDERAL STOCK NUMBER	REFERENCE NUMBER	(3) DESCRIPTION	MODELS USABLE ON CH-34C	(4) UNIT OF ISSUE	(5) QTY INC IN UNIT PACK	(6) QTY INC IN UNIT	(7) 30-DAY DS/GS MAINT ALW (a) 1-20	(b) 21-50	(c) 51-100	(8) 1-YR ALW PER 100 EQUIP CNTGCY	(9) DEPOT MAINT ALW PER 100 EQUIP	(10) ILLUSTRATION (a) FIG NO	(b) ITEM NO
					AVIONICS EQUIPMENT.....										217	
					INSTALLATION <CH-34C> VHF NOTE 1											
					RADIO RECEIVER R-666A/ARN-32										217	1
					ADAPTER,HEADSET,MICROPHONE... MX-1646/AIC										217	2
					PANEL,SIGNAL DISTRIBUTION.... SB-329/AR										217	3
					INDICATOR ID-637/ARN.....										217	4
					INDICATOR ID-453/ARN-30.....										217	5
					PANEL,CONTROL C-2275/ARN....										217	6
					COMPASS,MAGNETIC,AIRCRAFT J2										217	7
					ANTENNA AT-780/ARN-59.....										217	8
					TRANSPONDER SET AN/APX-44...										217	9
					RADIO RECEIVER R-836/ARN....										217	10
					DYNAMOTOR DY-150/ARN.....										217	11
					CONVERTER CV-265/ARN-30A....										217	12
					RADIO RECEIVER R-445/ARN-30.										217	13
					ANTENNA AT-884/APX-44.....										217	14
					ANTENNA 37R-2.....										217	14A
					ANTENNA AT-640/ARN.....										217	15
					DYNAMOTOR DY-107/AR.....										217	16
					ANTENNA AT-454A/ARC.....										217	17
					KEYER KY-149/AR.....										217	18
					RECEIVER TRANSMITTER..... RT-294/ARC-44										217	19
					RECEIVER 51X-2B.....										217	20
					TRANSMITTER 17L-7A.....										217	20A
					AUTOMATIC PILOT AN/ASN-23...										217	21
					IMPEDANCE MATCHING NETWORK... CU-459/AR										217	22
					ANTENNA ELEMENT AT-624/AR...										217	22A
					SWITCH ASSEMBLY SA-474/AR...										217	23
					PANEL,CONTROL SB-327/ARC-44.										217	24
					PANEL,CONTROL C-1254/ARN-30.										217	25
					CONTROL.....										217	26
					IMPEDANCE MATCHING NETWORK... CU-435/AIC										217	27
					TRANSMITTER,RADIO RECEIVER... RT-494/APX-44										217	28
					ANTENNA AS-580/ARN-30.....										217	29
					NOTE 1											
					SEE TM11-1520-202-20P OR TM11-1520-202-35P FOR BREAKDOWN											

(1) SOURCE, MAINT AND REC CODE (a) SOURCE CODE	(b) MAINT LEVEL	(c) REC CODE	(2) FEDERAL STOCK NUMBER	REFERENCE NUMBER	(3) DESCRIPTION	MODELS USABLE ON CH-34C	(4) UNIT OF ISSUE	(5) QTY INC IN UNIT PACK	(6) QTY INC IN UNIT	(7) 30-DAY DS GS MAINT ALW (a) 1-20	(b) 21-50	(c) 51-100	(8) 1-YR ALW PER 100 EQUIP CNTGCY	(9) DEPOT MAINT ALW PER 100 EQUIP	(10) ILLUSTRATION (a) FIG NO	(b) ITEM NO
					AVIONICS EQUIPMENT..... INSTALLATION <CH-34C>UHF NOTE 1										218	
					RADIO RECEIVER R-666A/ARN-32										218	1
					ADAPTER,HEADSET,MICROPHONE... MX-1646/AIC										218	2
					PANEL,SIGNAL DISTRIBUTION.... SB-329/AR										218	3
					INDICATOR ID-637/ARN.....										218	4
					INDICATOR ID-453/ARN-30.....										218	5
					PANEL,CONTROL C-2275/ARN....										218	6
					COMPASS,MAGNETIC,AIRCRAFT J2										218	7
					ANTENNA AT-780/ARN-59.....										218	8
					RECEIVER TRANSMITTER..... RT-349/ARC-55B										218	9
					RADIO RECEIVER R-836/ARN....										218	10
					DYNAMOTOR DY-150/ARN.....										218	11
					CONVERTER CV-265/ARN-30A....										218	12
					RADIO RECEIVER R-445/ARN-30.										218	13
					ANTENNA AT-450/ARC.....										218	14
					ANTENNA AT-640/ARN.....										218	15
					DYNAMOTOR DY-107/AR.....										218	16
					ANTENNA AT-454/ARC.....										218	17
					KEYER KY-149/AR.....										218	18
					RECEIVER TRANSMITTER..... RT-294/ARC-44										218	19
					AUTOMATIC PILOT AN/ARA-31...										218	20
					IMPEDANCE MATCHING NETWORK... CU-459/AR										218	21
					ANTENNA ELEMENT AT-624A/AR..										218	21A
					SWITCH ASSEMBLY SA-474/AR...										218	22
					PANEL,CONTROL SB-327/ARC-44.										218	23
					PANEL,CONTROL C-1254/ARN-30.										218	24
					PANEL,CONTROL C-1827/ARC-55.										218	25
					IMPEDANCE MATCHING NETWORK... CU-435/AIC										218	26
					ANTENNA AS-580/ARN-30..... NOTE 1 SEE TM11-1520-202-20P OR TM11-1520-202-35P FOR BREAKDOWN										218	27
					AVIONICS EQUIPMENT..... INSTALLATION <CH-34C> ASE NOTE 1										219	
					CONTROL,ALTITUDE,AUTOMATIC... PILOT 2203G										219	1

(1) SOURCE, MAINT AND REC CODE (a) SOURCE CODE	(b) MAINT LEVEL	(c) REC CODE	(2) FEDERAL STOCK NUMBER	(3) DESCRIPTION REFERENCE NUMBER		MODELS USABLE ON CH-34C	(4) UNIT OF ISSUE	(5) QTY INC IN UNIT PACK	(6) QTY INC IN UNIT	(7) 30-DAY DS/GS MAINT ALW (a) 1-20	(b) 21-50	(c) 51-100	(8) 1-YR ALW PER 100 EQUIP CNTGCY	(9) DEPOT MAINT ALW PER 100 EQUIP	(10) ILLUSTRATION (a) FIG NO	(b) ITEM NO
					CONTROLLER,FLIGHT,AUTOMATIC.. PILOT 1005N										219	2
					RELAY ASSEMBLY 650-4034.....										219	3
					RELAY,THERMAL HF-01-N0-28...										219	4
					RELAY,ARMATURE 33HSX-30.....										219	5
					CANCELLOR,CONTROL STICK 911D										219	6
					SWITCH,SENSITIVE BZ2RDS-AZ..										219	7
					CONTROLLER,ENGAGING,..... AUTOMATIC PILOT 2560E										219	8
					BOX,MOTOR S1645-61145.....										219	9
					SERVO MOTOR S1665-61755.....										219	10
					NOTE 1											
					SEE TM11-1520-202-20P OR TM11-1520-202-35P FOR BREAKDOWN											

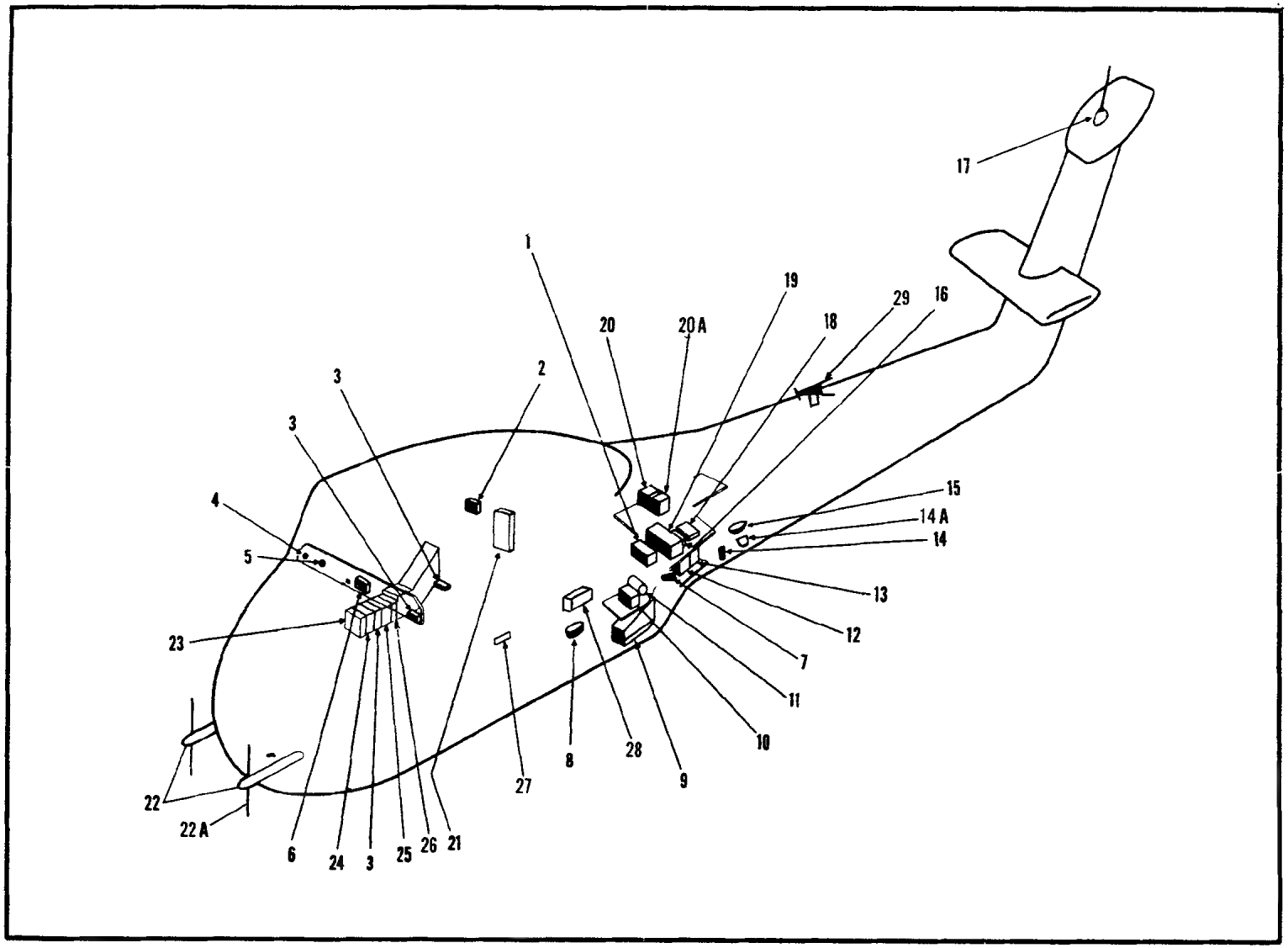

Figure 217. Avionics Equipment Installation (CH-34C) VHF

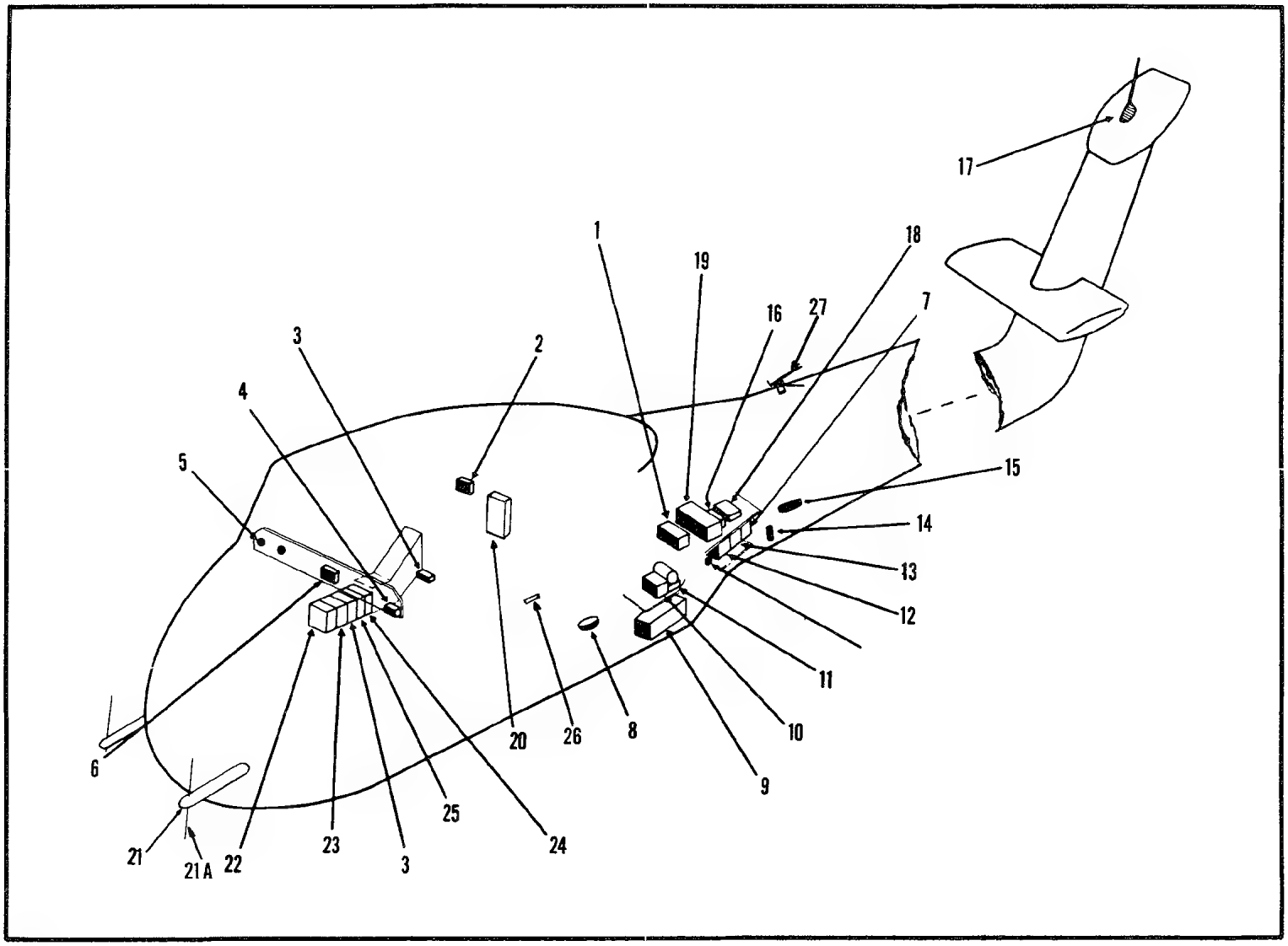

Figure 218. Avionics Equipment Installation (CH-34C) UHF

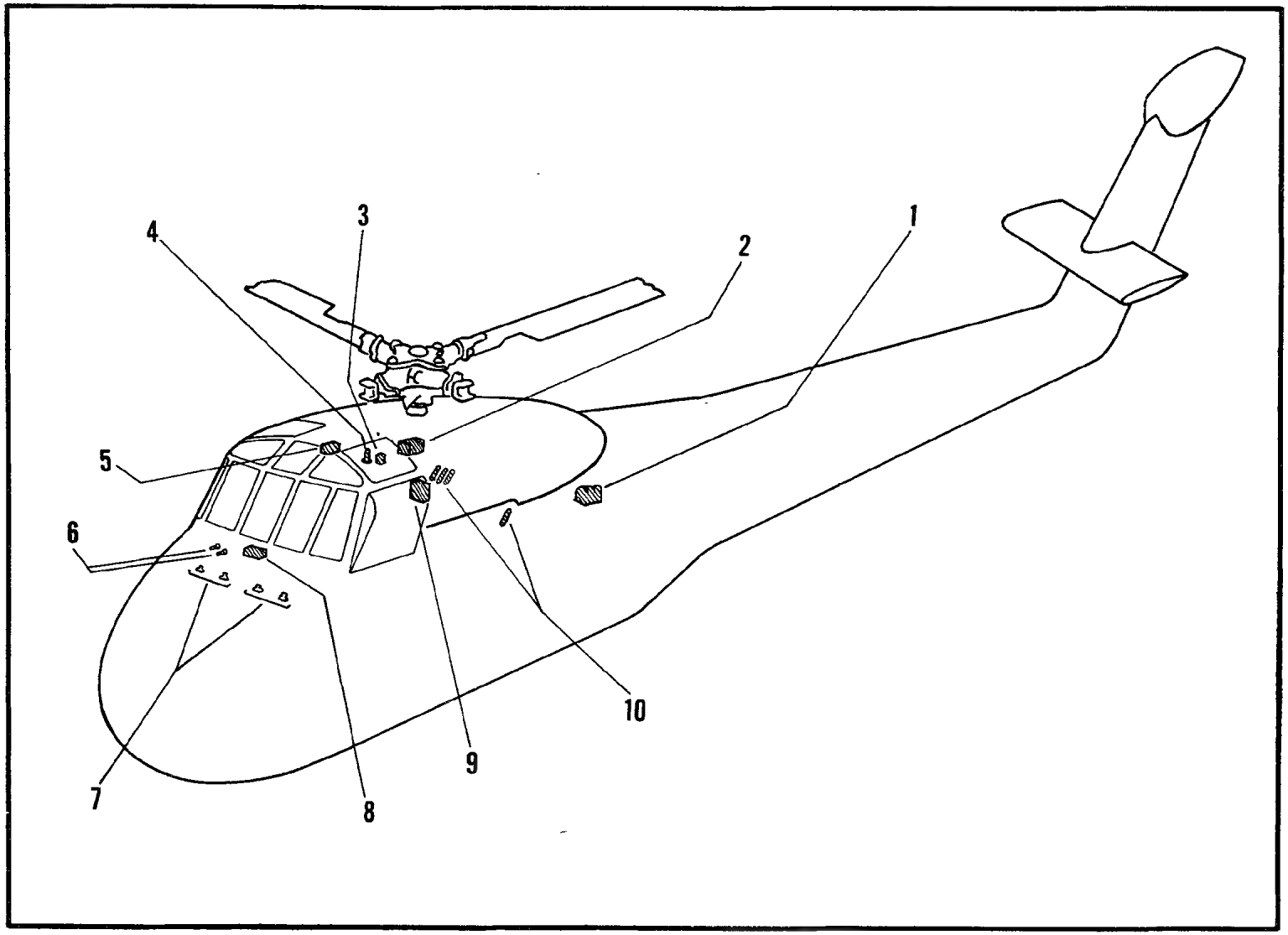

Figure 219. Avionics Equipment Installation (CH-34C) ASE

SECTION II

FUNCTIONAL GROUP 30

ARMAMENT

(1) SOURCE, MAINT AND REC CODE (a) SOURCE CODE	(b) MAINT LEVEL	(c) REC CODE	(2) FEDERAL STOCK NUMBER	(3) DESCRIPTION REFERENCE NUMBER		MODELS USABLE ON CH-34C	(4) UNIT OF ISSUE	(5) QTY INC IN UNIT PACK	(6) QTY INC IN UNIT	(7) 30-DAY DS GS MAINT ALW (a) 1-20	(b) 21-50	(c) 51-100	(8) 1-YR ALW PER 100 EQUIP CNTGCY	(9) DEPOT MAINT ALW PER 100 EQUIP	(10) ILLUSTRATION (a) FIG NO	(b) ITEM NO
AD	D			M6E1CH34	<81996> ARMAMENT.....		EA		1						225	
P	D		1560-994-9483	CH34M6E1	<78286> ARMAMENT.....		EA							*	225	
					ARMAMENT.....		EA		1	*	*	*		*		

SECTION II

FUNCTIONAL GROUP 50

REPAIR KITS

(1) SOURCE, MAINT AND REC CODE (a) SOURCE CODE	(b) MAINT LEVEL	(c) REC CODE	(2) FEDERAL STOCK NUMBER	REFERENCE NUMBER	(3) DESCRIPTION	MODELS USABLE ON CH-34C	(4) UNIT OF ISSUE	(5) QTY INC IN UNIT PACK	(6) QTY INC IN UNIT	(7) 30-DAY DS/GS MAINT ALW (a) 1-20	(b) 21-50	(c) 51-100	(8) 1-YR ALW PER 100 EQUIP CNTGCY	(9) DEPOT MAINT ALW PER 100 EQUIP	(10) ILLUSTRATION (a) FIG NO	(b) ITEM NO
P	O		1560-624-0175	EAB20	<81996> POLISHING KIT,PLEXIGLASS..... <NOT ILLUSTRATED>		EA		AR	5	13	26	317	*	K2	
					...POLISHING CLOTH-NO.475,.... 18 X 26 IN.		EA		1						K2	
					...WIPER,LINTLESS-NO.500,.... 9 X 16 IN.		EA		1						K2	
					...CLEANER/GLAZE-MGH7,..... 4 OZ.		BT		1						K2	
					...POLISHING BLOCK.....		EA		1						K2	
					...TISSUE.....		PK		1						K2	
					...WILCO ANTI-STATIC,..... PLASTIC CLEANER		BT		1						K2	
					...POLISHING COMPOUND,..... 4M-30,4 OZ		SE		1						K2	
P	O		1560-695-4909	1560EG006	<81996> REPAIR KIT,PLEXIGLASS.....		EA		AR	18	44	88		*	K2A	
					...EYE DROPPER-DD-P-355..... TYPE I		EA		AR						K2A	
					...MASKING TAPE-UU-T-106.....		EA		AR						K2A	
					...RESIN,ACRYLIC-U-R-179.....		EA		AR						K2A	
					...SPATULA-GG-S-590 TYPE I...		EA		AR						K2A	
					...TIN FOIL-QQ-T-276,SIZE 2..		EA		AR						K2A	
P	F		5340-633-5974	EAB210	<81996> KIT,CHAIN..... <NOT ILLUSTRATED>		EA		AR	*	*	*		*	K4	
				00	...BRONZE CHAIN-50 FT,.....		EA		1						K4	
				95	...S-HOOKS.....		EA		100						K4	
P	O		6850-341-8430	2911C1728S	<99171> KIT,RAIN REPELLANT-WINDOWS... AND WINDSHIELDS <NOT ILLUSTRATED>		KT		AR	*	*	*		*	K5	

(1) SOURCE, MAINT AND REC CODE (a) SOURCE CODE	(b) MAINT LEVEL	(c) REC CODE	(2) FEDERAL STOCK NUMBER	REFERENCE NUMBER		(3) DESCRIPTION	MODELS USABLE ON CH-34C	(4) UNIT OF ISSUE	(5) QTY INC IN UNIT PACK	(6) QTY INC IN UNIT	(7) 30-DAY DS/GS MAINT ALW (a) 1-20	(b) 21-50	(c) 51-100	(8) 1-YR ALW PER 100 EQUIP CNTGCY	(9) DEPOT MAINT ALW PER 100 EQUIP	(10) ILLUSTRATION (a) FIG NO	(b) ITEM NO
P	O		1560-624-0175	EAB20	<81996>	POLISHING KIT,PLEXIGLASS.....		EA		1	*	*	*		*	KITS	
						...POLISHING CLOTH-NO.475.... 18 X 26 IN.		EA		1							
						...WIPER,LINTLESS-NO.500..... 9 X 16 IN.		EA		1							
						...CLEANER/GLAZE-MGH7..... 4 OZ		BT		1							
						...POLISHING BLOCK.....		EA		1							
						...TISSUE.....		PK		1							
						...WILCO ANTI-STATIC..... PLASTIC CLEANER		BT		1							
						...POLISHING COMPOUND..... 4M-30,4 OZ		SE		1							
P	O		1560-695-4909	1560EG006	<81996>	REPAIR KIT,PLEXIGLASS.....		EA		1	*	*	*		*		
						...EYE DROPPER-DD-P-355..... TYPE 1		EA		1							
						...MASKING TAPE-UU-T-106.....		EA		1							
						...RESIN,ACRYLIC-U-R-179.....		EA		1							
						...SPATULA-GG-S-590 TYPE 1...		EA		1							
						...TIN FOIL-QQ-T-276,SIZE 2..		EA		1							
P	O		1560-715-2242	S1507-2523-1	<78286>	REPAIR KIT,OIL PUMP COVER.... OBSLTS 1560-629-4450 U/O 1560-672-3564,FIG.28		EA			*	*	REF				
				AN6289-3		...NUT.....		EA		1							
				B16304		...SCREEN.....		EA		3							
				MS20364-624		...NUT.....		EA		1							
				MS28777B3		...RING.....		EA		1							
				MS28778B3		...GASKET.....		EA		1							
				35016C		...PACKING.....		EA		1							
P	H		1560-715-2256	S1607-1561-1	<78286>	PARTS KIT,TAIL ROTOR..... ASSEMBLY U/O PN S1610-3110-19,FIG.38		EA			*	REF	REF				
				AN174-7A		...BOLT.....		EA		2							
				AN960-416		...WASHER.....		EA		6							
				MS15002-1		...FITTING.....		EA		2							
				MS20364-820		...NUT.....		EA		8							
				MS20365-428		...NUT.....		EA		2							
				NAS2-101A		...LUBRICATOR.....		EA		4							
				S1610-31001		...WASHER.....		EA		8							
				S1610-31003		...WASHER,FLAT.....		EA		4							
				S1610-33002		...SPACER.....		EA		4							
				S1610-33111		...STOP.....		EA		4							
				S1610-33115		...WASHER.....		EA		4							
				S1615-30014-1		...SHIM.....		EA		2							
				S1615-30014-2		...SHIM.....		EA		2							
				S1615-30113-4		...SHIM.....		EA		5							
P	D		1560-715-2258	S1607-3601-1	<78286>	PARTS KIT,TAIL ROTOR GEAR.... BOX-OVERHAUL U/O 1615-587-6385,FIG.158		EA									
				AN174-14		...BOLT.....		EA		1							
				AN310-6		...NUT.....		EA		1							
				AN320-4		...NUT.....		EA		5							

(1) SOURCE, MAINT AND REC CODE (a) SOURCE CODE	(b) MAINT LEVEL	(c) REC CODE	(2) FEDERAL STOCK NUMBER	(3) DESCRIPTION REFERENCE NUMBER			MODELS USABLE ON CH-34C	(4) UNIT OF ISSUE	(5) QTY INC IN UNIT PACK	(6) QTY INC IN UNIT	(7) 30-DAY DS, GS MAINT ALW (a) 1-20	(b) 21-50	(c) 51-100	(8) 1-YR ALW PER 100 EQUIP ONTOCY	(9) DEPOT MAINT ALW PER 100 EQUIP	(10) ILLUSTRATION (a) FIG NO	(b) ITEM NO
				AN381-2-10		...PIN.....		EA		1						KITS	
				AN381-2-12		...PIN.....		EA		2							
				AN381-2-8		...PIN.....		EA		4							
				AN386-3-16		...PIN.....		EA		1							
				AN386-3-17		...PIN.....		EA		1							
				AN386-3-18		...PIN.....		EA		2							
				AN509-10-14		...SCREW.....		EA		1							
				AN8H6A		...BOLT.....		EA		1							
				AN960-416		...WASHER.....		EA		24							
				AN960-516		...WASHER.....		EA		28							
				AN960-516L		...WASHER.....		EA		8							
				AN960-616L		...WASHER.....		EA		1							
				AN960PD10		...WASHER.....		EA		14							
				AN975-4		...WASHER.....		EA		6							
				A722		...PLUG.....		EA		1							
				DW4K		...BEARING.....		EA		1							
				MS172299		...WASHER.....		EA		1							
				MS172349		...NUT.....		EA		1							
				MS20365-1032C		...NUT.....		EA		14							
				MS20365-428C		...NUT.....		EA		22							
				MS20365-524C		...NUT.....		EA		28							
				NAS51-106		...SNAP RING.....		EA		1							
				SS4400-1		...WASHER.....		EA		1							
				SS5070-172289		...WASHER.....		EA		1							
				S1635-64027		...SPACER.....		EA		1							
				S1635-64028		...SPACER.....		EA		1							
				S1635-64038		...GASKET.....		EA		2							
				S1635-64039		...GASKET.....		EA		1							
				S1635-64041		...WINDOW.....		EA		1							
				S1635-64043		...GASKET.....		EA		1							
				S1635-64045		...GASKET.....		EA		1							
				S1635-64046		...SHIM.....		EA		1							
				S1635-64051		...SHIM.....		EA		1							
				S1635-64059-1		...PLUG ASSEMBLY.....		EA		1							
				S1635-64066		...PLUG.....		EA		1							
P	D		1560-715-2259	S1607-3601-2	<78286>	PARTS KIT,TAIL ROTOR GEAR.... BOX-<CURE DATE> U/O 1615-587-6385,FIG.158		EA									
				AN6227B17		...RING.....		EA		3							
				MS28778-8		...GASKET.....		EA		1							
				S1635-64072		...BOOT.....		EA		1							
				21681-1258		...SEAL.....		EA		1							
				21681-1471		...SEAL.....		EA		1							
				21708-0321		...SEAL.....		EA		1							
P	D		1560-715-2260	S1607-3602-1	<78286>	PARTS KIT,INTERMEDIATE GEAR.. BOX U/O 1615-671-1773, FIG.157		EA									
				AN381-2-10		...PIN,COTTER.....		EA		1							
				AN381-3-10		...PIN,COTTER.....		EA		1							
				AN4H5A		...BOLT.....		EA		8							
				AN5H15A		...BOLT.....		EA		3							
				AN509-416-13		...BOLT.....		EA		3							

(1) SOURCE, MAINT AND REC CODE (a) SOURCE CODE	(b) MAINT LEVEL	(c) REC CODE	(2) FEDERAL STOCK NUMBER	REFERENCE NUMBER	(3) DESCRIPTION	MODELS USABLE ON CH-34C	(4) UNIT OF ISSUE	(5) QTY INC IN UNIT PACK	(6) QTY INC IN UNIT	(7) 30-DAY DS/GS MAINT ALW (a) 1-20	(b) 21-50	(c) 51-100	(8) 1-YR ALW PER 100 EQUIP CNTGCY	(9) DEPOT MAINT ALW PER 100 EQUIP	(10) ILLUSTRATION (a) FIG NO	(b) ITEM NO
				AN75-16	...BOLT.....		EA		3						KITS	
				AN814-16D	...PLUG.....		EA		1							
				AN833-16D	...ELBOW.....		EA		1							
				AN924-16D	...NUT.....		EA		1							
				AN929-16	...CAP.....		EA		1							
				AN960-416	...WASHER.....		EA		16							
				AN960-516	...WASHER.....		EA		24							
				A722	...PLUG.....		EA		1							
				MS172211	...LOCKWASHER.....		EA		1							
				MS172246	...NUT.....		EA		1							
				MS20364-428C	...NUT.....		EA		8							
				MS20365-524C	...NUT.....		EA		18							
				S1635-64126	...SHIM.....		EA		4							
				S1635-64128	...WINDOW.....		EA		1							
				S1635-64129	...GASKET.....		EA		4							
				S1635-64136	...GASKET.....		EA		1							
				S1635-64139-3	...PLUG ASSEMBLY.....		EA		2							
				S1635-64140	...SEAL.....		EA		1							
				1604-81	...PLUG.....		EA		1							
P	D		1560-715-2261	S1607-3602-2 <78286>	PARTS KIT,INTERMEDIATE GEAR.. BOX-<CURE DATE> U/O 1615-671-1773,FIG.157		EA									
				MS28778-10	...GASKET.....		EA		1							
				MS28778-16	...GASKET.....		EA		1							
				21681-0979	...SEAL.....		EA		2							
P	D		1560-715-2262	S1607-3603-1 <78286>	PARTS KIT,MAIN GEAR BOX-..... <OVERHAUL> U/O 1560-893-0158,FIG.22		EA									
				AN104041	...BOLT.....		EA		16							
				AN104042	...BOLT.....		EA		16							
				AN104145	...BOLT.....		EA		5							
				AN104149	...BOLT.....		EA		5							
				AN104343	...BOLT.....		EA		10							
				AN122584	...WASHER.....		EA		12							
				AN316-12	...NUT.....		EA		1							
				AN320-4	...NUT.....		EA		1							
				AN381-2-12	...PIN.....		EA		1							
				AN381-3-12	...PIN.....		EA		1							
				AN381-3-8	...PIN.....		EA		1							
				AN381-4-12	...PIN.....		EA		5							
				AN4H3A	...BOLT.....		EA		8							
				AN4H5A	...BOLT.....		EA		8							
				AN5-12A	...BOLT.....		EA		33							
				AN5-31A	...BOLT.....		EA		19							
				AN5H5A	...BOLT.....		EA		8							
				AN500A8-4	...SCREW.....		EA		15							
				AN501A10-8	...SCREW.....		EA		2							
				AN501A416-5	...SCREW.....		EA		8							
				AN507-428-8	...SCREW.....		EA		20							
				AN6289-3	...NUT.....		EA		1							
				AN742D8	...CLAMP.....		EA		2							
				AN779D8	...CONNECTOR,MULTIPLE.....		EA		2							

(1) SOURCE, MAINT AND REC CODE (a) SOURCE CODE	(b) MAINT LEVEL	(c) REC CODE	(2) FEDERAL STOCK NUMBER	(3) DESCRIPTION REFERENCE NUMBER		MODELS USABLE ON CH-34C	(4) UNIT OF ISSUE	(5) QTY INC IN UNIT PACK	(6) QTY INC IN UNIT	(7) 30-DAY DS/GS MAINT ALW (a) 1-20	(b) 21-50	(c) 51-100	(8) 1-YR ALW PER 100 EQUIP CNTGCY	(9) DEPOT MAINT ALW PER 100 EQUIP	(10) ILLUSTRATION (a) FIG NO	(b) ITEM NO
				AN901-8A	...GASKET		EA		4						KITS	
				AN932-2	...PLUG		EA		2							
				AN960-10	...WASHER		EA		10							
				AN960-10L	...WASHER		EA		2							
				AN960-416	...WASHER		EA		9							
				AN960-416L	...WASHER		EA		12							
				AN960-516	...WASHER		EA		64							
				AN960D416	...WASHER		EA		20							
				AN960PD416	...WASHER		EA		20							
				AN960PD516	...WASHER		EA		25							
				AN960PD616	...WASHER		EA		16							
				MS20364-428C	...NUT		EA		28							
				MS20364-624	...NUT		EA		1							
				MS20365-1032C	...NUT		EA		12							
				MS20365-428C	...NUT		EA		12							
				MS20365-524C	...NUT		EA		109							
				MS20365-624C	...NUT		EA		44							
				MS20365-720C	...NUT		EA		10							
				MS20365-918C	...NUT		EA		10							
				NAS144A18	...BOLT		EA		1							
				RR462	...RING		EA		1							
				SS4017-7	...JET		EA		2							
				SS4422-1	...WASHER,NONMETALLIC		EA		1							
				S1535-20125	...SPRING		EA		1							
				S1535-20157-2	...GASKET		EA		1							
				S1535-20158	...GASKET		EA		1							
				S1535-20158-1	...GASKET		EA		1							
				S1535-20158-3	...GASKET		EA		1							
				S1535-20158-4	...GASKET		EA		1							
				S1635-20017-3	...PLUG ASSEMBLY		EA		1							
				S1635-20021-1	...GASKET		EA		1							
				S1635-20024	...SPACER		EA		1							
				S1635-20050-1	...SCREW		EA		2							
				S1635-20079-1	...SHIM		EA		1							
				S1635-20080-1	...GASKET		EA		1							
				S1635-20081	...SHIM		EA		1							
				S1635-20082-1	...SHIM		EA		1							
				S1635-20096-1	...SCREW		EA		3							
				S1635-20106-1	...WINDOW		EA		1							
				S1635-20107-1	...GASKET		EA		1							
				S1635-20110	...SHIM		EA		1							
				S1635-20114	...GASKET		EA		2							
				S1635-20118	...SHIM		EA		1							
				S1635-20122-1	...PLUG ASSEMBLY		EA		1							
				S1635-20123-1	...GASKET		EA		1							
				S1635-20127	...WASHER		EA		2							
				S1635-20128	...WASHER		EA		1							
				S1635-20165-1	...SHIM		EA		2							
				S1635-20165-2	...SHIM		EA		2							
				S1635-20176	...SHIM		EA		2							
				S1635-20179	...SPACER		EA		1							
				S1635-20187	...SHIM		EA		2							

(1) SOURCE, MAINT AND REC CODE (a) SOURCE CODE	(b) MAINT LEVEL	(c) REC LEVEL CODE	(2) FEDERAL STOCK NUMBER	(3) DESCRIPTION REFERENCE NUMBER			MODELS USABLE ON CH-34C	(4) UNIT OF ISSUE	(5) QTY INC IN UNIT PACK	(6) QTY INC IN UNIT	(7) 30-DAY DS GS MAINT ALW (a) 1-20	(b) 21-50	(c) 51-100	(8) 1-YR ALW PER 100 EQUIP CNTGCY	(9) DEPOT MAINT ALW PER 100 EQUIP	(10) ILLUSTRATION (a) FIG NO	(b) ITEM NO
P	D		1560-715-2263	S1607-3603-2	<78286>	PARTS KIT,MAIN GEAR BOX-..... <CURE DATE> U/O 1560-893-0158,FIG.22		EA								KITS	
				AN123898		...GASKET.....		EA		1							
				AN123920		...RING.....		EA		1							
				AN123924		...RING.....		EA		1							
				AN6227B10		...RING.....		EA		1							
				AN6227B17		...RING.....		EA		1							
				AN6227B19		...RING.....		EA		1							
				MS28778-10		...GASKET.....		EA		1							
				MS28778-3		...GASKET.....		EA		1							
				S1635-20095-1		...SEAL.....		EA		2							
				21484-3275		...SEAL.....		EA		1							
				21681-1471		...SEAL.....		EA		1							
				21681-2366		...SEAL.....		EA		1							
				21711-0067		...SEAL.....		EA		1							
				21711-0143		...SEAL.....		EA		1							
				21711-0255		...SEAL.....		EA		2							
				21711-0357		...SEAL.....		EA		1							
P	H		1560-715-2267	S1607-6528-1	<78286>	PARTS KIT,PRIMARY SERVO..... U/O 1560-672-4829,FIG.100		EA			REF	REF	REF				
				AN173-6A		...BOLT.....		EA		1							
				AN173-7A		...BOLT.....		EA		1							
				AN503-8-12		...SCREW.....		EA		6							
				AN6231A2		...RING.....		EA		1							
				AN931-5-9		...GROMMET.....		EA		1							
				AN932-2		...PLUG.....		EA		5							
				AN960PD10		...WASHER.....		EA		4							
				AN960PD8		...WASHER.....		EA		12							
				MS20365-1032		...NUT.....		EA		2							
				MS20365-524C		...NUT.....		EA		2							
				MS20365-832		...NUT.....		EA		6							
				NAS509-4		...NUT.....		EA		1							
				NAS509-8		...NUT.....		EA		1							
				NAS559-3		...LOCK.....		EA		1							
				REB3N		...BEARING.....		EA		1							
				S14-40-5008		...SEAL.....		EA		3							
				S14-40-5194		...CLAMP.....		EA		1							
				S1665-20007		...END CAP ASSEMBLY.....		EA		1							
				S1665-20009		...VALVE ASSEMBLY.....		EA		1							
				S1665-20035		...WASHER.....		EA		3							
P	H		1560-715-2268	S1607-6528-2	<78286>	PARTS KIT,MAIN ROTOR..... U/O 1560-672-4829,FIG.100		EA			REF	REF	REF				
				AN6227B10		...PACKING.....		EA		5							
				AN6227B11		...PACKING.....		EA		2							
				AN6227B18		...PACKING.....		EA		1							
				AN6227B19		...PACKING.....		EA		2							
				AN6227B9		...PACKING.....		EA		2							
				AN6232C15-16		...WIPER.....		EA		2							
				MS28774-112		...RING.....		EA		3							
				MS28774-113		...RING.....		EA		4							
				MS28774-213		...RING.....		EA		2							

(1) SOURCE, MAINT AND REC CODE (a) SOURCE CODE	(b) MAINT LEVEL	(c) REC CODE	(2) FEDERAL STOCK NUMBER	REFERENCE NUMBER	(3) DESCRIPTION	MODELS USABLE ON CH-34C	(4) UNIT OF ISSUE	(5) QTY INC IN UNIT PACK	(6) QTY INC IN UNIT	(7) 30-DAY DS/GS MAINT ALW (a) 1-20	(b) 21-50	(c) 51-100	(8) 1-YR ALW PER 100 EQUIP CNTGCY	(9) DEPOT MAINT ALW PER 100 EQUIP	(10) ILLUSTRATION (a) FIG NO	(b) ITEM NO
				MS28774-214	...RING.....		EA		2						KITS	
				SS2945	...BOOT.....		EA		5							
				S14-40-5054-3	...BOOT.....		EA		3							
P	H		1560-715-2269	S1607-6544-2 <78286>	PARTS KIT,HYDRAULIC PEDAL.... DAMPER U/O 1650-589-8446, FIG.103		EA			*	REF	REF				
				S1565-61366	...SPRING.....		EA		1							
				S1565-61486	...SPRING.....		EA		2							
				S1565-61520-1	...FILTER AND ORFICE.....		EA		1							
				S1565-61523	...PLUG.....		EA		1							
P	H		1560-715-7864	AA6000-3 <78286>	REPAIR KIT,CARGO HOOK U/O... 1680-708-2341,FIG.122		EA			*	*	*	REF			
				AN25-29A	...BOLT,CLEVIS.....		EA		1							
				AN27-32	...BOLT,CLEVIS.....		EA		3							
				AN3102M14S2P	...RECEPTACLE.....		EA		1							
				AN320-7	...NUT.....		EA		3							
				AN364-524	...NUT,SELF-LOCKING,HEXAGON..		EA		1							
				AN380-2-2	...PIN,COTTER.....		EA		1							
				AN380-3-3	...PIN,COTTER.....		EA		3							
				AN426AD6-7	...RIVET,SOLID.....		EA		1							
				AN455A3-6	...RIVET.....		EA		1							
				AN500A4-7	...SCREW.....		EA		4							
				AN500A8-7	...SCREW,FILLISTER HEAD.....		EA		4							
				AN535-2-3	...SCREW.....		EA		8							
				AN936A4	...WASHER.....		EA		4							
				AN936A8	...WASHER,LOCK.....		EA		4							
				AN960-716L	...WASHER,FLAT.....		EA		1							
				AN960D10	...WASHER,FLAT.....		EA		1							
				AN960PD516	...WASHER,FLAT.....		EA		1							
				AN995C20-5	...LOCKWIRE.....		EA		1							
				AN995C32-9	...LOCKWIRE.....		EA		2							
				BZ7RW822T03	...MICROSWITCH.....		EA		2							
				SK116	...NAMEPLATE.....		EA		1							
				SK68	...PLATE,ELECTRICAL DIAGRAM..		EA		1							
				SP397	...PLUNGER,TRUNNION.....		EA		1							
				SP399	...PIN,ACTUATOR.....		EA		1							
				SP406	...SPRING,LOAD BEAM.....		EA		1							
				SP412	...ACTUATOR.....		EA		1							
				SP457	...PIVOT.....		EA		2							
				SP458	...LINK.....		EA		2							
				SP460	...PIN,SHOULDER.....		EA		2							
				SP469-1	...POST,MICROSWITCH.....		EA		4							
				SP470-2	...PIN.....		EA		1							
				SP471	...LINK,SOLENOID.....		EA		1							
				SP476	...SPRING,LATCH.....		EA		1							
				SP511	...ADAPTER.....		EA		1							
				SP512	...SPRING,LEVER.....		EA		1							
				SP513	...BUMPER,LATCH.....		EA		1							
				SP514	...STUD,SOLENOID.....		EA		2							
				SP521-1	...GUIDE,THIN.....		EA		1							
				SP521-2	...GUIDE,THICK.....		EA		1							
				SP529	...STOP-HAND LEVER.....		EA		1							

(1) SOURCE, MAINT AND REC CODE (a) SOURCE CODE	(b) MAINT CATEGORY	(c) REC CODE	(2) FEDERAL STOCK NUMBER	REFERENCE NUMBER	(3) DESCRIPTION	MODELS USABLE ON CH-34C	(4) UNIT OF ISSUE	(5) QTY INC IN UNIT PACK	(6) QTY INC IN UNIT	(7) 30-DAY DS/GS MAINT ALW (a) 1-20	(b) 21-50	(c) 51-100	(8) 1 YR ALW PER 100 EQUIP CNTGCY	(9) DEPOT MAINT ALW PER 100 EQUIP	(10) ILLUSTRATION (a) FIG NO	(b) ITEM NO
				SP530	...BUMPER,BEAM.....		EA		1						KITS	
				SP583	...PIVOT,HINGE.....		EA		1							
				SP584	...SCREW.....		EA		1							
				SP609-1	...WIRE.....		EA		2							
				SP609-2	...WIRE.....		EA		2							
				SP631	...SPRING.....		EA		1							
				SP805-2	...COVER.....		EA		1							
				SP841-1	...PIN,DOWEL-SHORT.....		EA		2							
				SP841-2	...PIN,DOWEL-LONG.....		EA		1							
				SP851	...SPRING.....		EA		1							
				11	...TRANSFLEX TUBING.....		EA		4							
				34149C	...TERMINAL.....		EA		6							
				52-032-156-0437	...PIN.....				2							
				79-022-094-0625	...PIN.....		EA		1							
				79-028-125-0625	...PIN.....		EA		1							
				79-028-125-0750	...PIN.....		EA		1							
				9	...TUBING,TRANSFLEX.....		EA		2							
P	H		1615-715-8739	S1607-1097-2 <78286>	PARTS KIT,MAIN ROTOR DAMPER.. U/O 1560-627-2034,FIG.17		EA			REF	REF	REF				
				AN6227B16	...RING.....		EA		4							
				AN6227B2	...RING.....		EA		1							
				AN6227B22	...RING.....		EA		2							
				AN6227B38	...RING.....		EA		1							
				AN6227B7	...RING.....		EA		3							
				AN6230B11	...GASKET.....		EA		1							
				MS28778-2	...GASKET.....		EA		2							
				MS28778-4	...GASKET.....		EA		1							
				MS28778-6	...GASKET.....		EA		1							
				S10-10-6432-2	...BOOT.....		EA		2							
				110-8	...SEAL.....		EA		3							
P	O		1560-724-3306	EAB430 <81996>	TAPE KIT SPECIAL,FIG.38..... TAPE,NO.472-2 IN.W,10 FT LG.,BLACK FOR USE ON LEADING EDGE OF ROTOR BLADES.CAN BE REMOVED BY PEELING,WITHOUT USE OF CHEMICALS		EA									
P	D		1615-733-2563	S1607-1098-1 <78286>	PARTS KIT,MAIN ROTOR..... ASSEMBLY U/O 1560-611-3886,FIG.12		EA									
				AN122585	...WASHER.....		EA		12							
				AN206DSPG	...BEARING.....		EA		1							
				AN310-5	...NUT.....		EA		2							
				AN310-6	...NUT.....		EA		7							
				AN310-7	...NUT.....		EA		4							
				AN315-7R	...NUT.....		EA		4							
				AN320-6	...NUT.....		EA		14							
				AN320-7	...NUT.....		EA		9							
				AN320-8	...NUT.....		EA		1							
				AN340-8	...NUT.....		EA		1							
				AN381-2-10	...PIN,COTTER.....		EA		4							
				AN381-2-8	...PIN,COTTER.....		EA		3							

(1) SOURCE, MAINT AND REC CODE (a) SOURCE CODE	(b) MAINT LEVEL	(c) REC CODE	(2) FEDERAL STOCK NUMBER	(3) DESCRIPTION REFERENCE NUMBER		MODELS USABLE ON CH-34C	(4) UNIT OF ISSUE	(5) QTY INC IN UNIT PACK	(6) QTY INC IN UNIT	(7) 30-DAY DS/GS MAINT ALW (a) 1-20	(b) 21-50	(c) 51-100	(8) 1-YR ALWPER 100 EQUIP CNTGCY	(9) DEPOT MAINT ALWPER 100 EQUIP	(10) ILLUSTRATION (a) FIG NO	(b) ITEM NO
				AN381-3-10	...PIN,COTTER		EA		14						KITS	
				AN381-3-12	...PIN,COTTER		EA		26							
				AN381-3-16	...PIN,COTTER		EA		1							
				AN394-37	...PIN		EA		1							
				AN4-21	...BOLT		EA		12							
				AN4-30A	...BOLT		EA		4							
				AN4-6	...BOLT		EA		1							
				AN4-7	...BOLT		EA		4							
				AN426AD6-14	...RIVET		EA		2							
				AN427-6-8	...RIVET		EA		12							
				AN5-11	...BOLT		EA		2							
				AN500A8-5	...SCREW		EA		1							
				AN502-10-10	...SCREW		EA		8							
				AN503-10-6	...SCREW		EA		1							
				AN505-8-13	...SCREW		EA		1							
				AN535-4-3	...SCREW,DRIVE		EA		1							
				AN565D8-4	...SCREW		EA		1							
				AN6-12	...BOLT		EA		4							
				AN6H14A	...BOLT		EA		8							
				AN6H15A	...BOLT		EA		16							
				AN7H11A	...BOLT		EA		8							
				AN74A4	...BOLT		EA		12							
				AN74A5	...BOLT		EA		12							
				AN815-4	...UNION		EA		4							
				AN932D3	...PLUG		EA		2							
				AN932M3	...PLUG		EA		1							
				AN935-10	...WASHER		EA		1							
				AN960-10	...WASHER		EA		12							
				AN960-10L	...WASHER		EA		8							
				AN960-1016	...WASHER		EA		4							
				AN960-416	...WASHER		EA		13							
				AN960-416L	...WASHER		EA		17							
				AN960-616	...WASHER		EA		11							
				AN960-616L	...WASHER		EA		33							
				AN960-716	...WASHER		EA		14							
				AN960-716L	...WASHER		EA		54							
				AN960-8	...WASHER		EA		4							
				AN960-816	...WASHER		EA		2							
				AN960PD1016	...WASHER		EA		6							
				AN960PD516	...WASHER		EA		4							
				AN960PD616	...WASHER		EA		6							
				AN960PD616L	...WASHER		EA		10							
				AN960PD716	...WASHER		EA		6							
				AN960PD716L	...WASHER		EA		10							
				AN960PD8	...WASHER		EA		1							
				AN995C41-4	...LOCKWIRE		EA		4							
				AN995C62-6	...LOCKWIRE		EA		8							
				AN995NC32-4	...LOCKWIRE		EA		4							
				AN995NC32-48	...LOCKWIRE		EA		1							
				EB070	...NUT		EA		30							
				EB108	...NUT		EA		4							
				GB1012	...BEARING		EA		2							

(1) SOURCE, MAINT AND REC CODE (a) SOURCE CODE	(b) MAINT LEVEL	(c) REC CODE	(2) FEDERAL STOCK NUMBER	(3) DESCRIPTION REFERENCE NUMBER		MODELS USABLE ON CH-34C	(4) UNIT OF ISSUE	(5) QTY INC IN UNIT PACK	(6) QTY INC IN UNIT	(7) 30-DAY DS/GS MAINT ALW (a) 1-20	(b) 21-50	(c) 51-100	(8) 1-YR ALW PER 100 EQUIP CNTGCY	(9) DEPOT MAINT ALW PER 100 EQUIP	(10) ILLUSTRATION (a) FIG NO	(b) ITEM NO
				GB1212	...BEARING		EA		4						KITS	
				KP10A	...BEARING		EA		2							
				KP6A	...BEARING		EA		13							
				MS15001-1	...LUBRICATOR		EA		15							
				MS15001-3	...FITTING		EA		1							
				MS15002-1	...LUBRICATOR		EA		1							
				MS20364-720	...NUT		EA		16							
				MS20365-428	...NUT		EA		12							
				MS20365-624	...NUT		EA		16							
				MS20365-832	...NUT		EA		4							
				MS20365D428	...NUT		EA		1							
				NAS2-101	...LUBRICATOR		EA		48							
				NAS43-4-6	...SPACER		EA		8							
				NAS464-6-28	...BOLT		EA		1							
				NAS464-6-34	...BOLT		EA		2							
				NAS464-7-14	...BOLT		EA		16							
				NAS464-7-48	...BOLT		EA		1							
				NAS464-7-52	...BOLT		EA		1							
				NAS464-7-65	...BOLT		EA		2							
				NAS464-8-72	...BOLT		EA		2							
				S10-10-3365-1	...WASHER		EA		5							
				S10-10-3369-1	...WASHER		EA		4							
				S10-10-3389-1	...BUSHING		EA		8							
				S10-10-5359-1	...BUSHING		EA		8							
				S10-10-5363	...BUSHING		EA		8							
				S10-10-5366	...PIN		EA		4							
				S10-10-5371	...SPACER		EA		8							
				S10-10-5372-2	...BOLT		EA		4							
				S1510-21406	...WASHER		EA		16							
				S1510-23076-1	...WASHER		EA		4							
				S1510-23085	...SPIDER		EA		2							
				S1610-21003	...SPACER		EA		8							
				S1610-21016-1	...WASHER		EA		8							
				S1610-21018	...LOCK		EA		4							
				S1610-21021	...WASHER		EA		5							
				S1610-21082	...RING		EA		1							
				S1610-21083	...RING		EA		1							
				S1610-21086	...JUMPER ASSEMBLY		EA		4							
				S1610-21087	...JUMPER ASSEMBLY		EA		4							
				S1610-21171-5	...BOLT		EA		5							
				S1610-21171-6	...BOLT		EA		2							
				S1610-23017-1	...WASHER		EA		4							
				S1610-23017-2	...WASHER		EA		4							
				S1610-23024	...SHIM		EA		4							
				S1610-23030	...WASHER		EA		4							
				S1610-23034	...WASHER		EA		4							
				S1610-23039	...WASHER		EA		4							
				S1610-23045	...WASHER		EA		4							
				S1610-23046	...WASHER		EA		4							
				S1610-23058	...WASHER		EA		4							
				S1610-23059-1	...WASHER		EA		4							
				S1610-23065	...WASHER		EA		4							

(1) SOURCE, MAINT AND REC CODE (a) SOURCE CODE	(b) MAINT LEVEL	(c) REC CODE	(2) FEDERAL STOCK NUMBER	(3) DESCRIPTION REFERENCE NUMBER			MODELS USABLE ON CH-34C	(4) UNIT OF ISSUE	(5) QTY INC IN UNIT PACK	(6) QTY INC IN UNIT	(7) 30-DAY DS GS MAINT ALW (a) 1-20	(b) 21-50	(c) 51-100	(8) 1-YR ALW PER 100 EQUIP CNTGCY	(9) DEPOT MAINT ALW PER 100 EQUIP	(10) ILLUSTRATION (a) FIG NO	(b) ITEM NO
				S1610-23066		...PIN.....		EA		4						KITS	
				S1610-23096		...WASHER.....		EA		4							
				S1610-23098		...WASHER.....		EA		4							
				S1610-23173-1		...SHIM.....		EA		4							
				S1610-23173-2		...SHIM.....		EA		4							
				S1610-23174-2		...SHIM.....		EA		4							
				S1610-23175-1		...SHIM.....		EA		4							
				S1610-23175-2		...SHIM.....		EA		4							
				S1610-23177		...SHIM.....		EA		4							
				S1610-23178		...SHIM.....		EA		4							
				S1610-23179		...SHIM.....		EA		4							
				S1610-23180		...SHIM.....		EA		1							
				S1610-23181-2		...SHIM.....		EA		4							
				S1610-23182-1		...WASHER.....		EA		4							
				S1610-23182-2		...WASHER.....		EA		4							
				S1610-23183		...SHIM.....		EA		16							
				S1610-23183-2		...SHIM.....		EA		1							
				S1610-23184-1		...SHIM.....		EA		4							
				S1610-23184-2		...WASHER.....		EA		8							
				S1610-24007-1		...SHIM.....		EA		1							
				S1610-24007-3		...SHIM.....		EA		1							
				S1610-24007-4		...SHIM.....		EA		1							
				S1610-24028		...BOLT.....		EA		8							
				S1610-24031-1		...SPRING.....		EA		1							
				S1610-24036-1		...WASHER.....		EA		4							
				S1610-24036-2		...WASHER.....		EA		8							
				S1610-24065		...WASHER.....		EA		2							
				S1610-24071-1		...SHIM.....		EA		1							
				S1610-24072-1		...SHIM.....		EA		5							
				S1610-24083		...SHIM.....		EA		1							
				S1610-24084		...SPACER.....		EA		1							
				S1610-24086		...SHIM.....		EA		1							
				S1610-24087-1		...SHIM.....		EA		1							
				S1610-24087-2		...SHIM.....		EA		3							
				S1610-24087-3		...SHIM.....		EA		6							
				S1610-24089		...SHIM.....		EA		4							
				S1610-24090		...SHIM.....		EA		6							
				S1610-24093		...SHIM.....		EA		1							
				S1610-24094		...SHIM.....		EA		2							
				S1610-25072		...BOLT.....		EA		4							
				S1610-25075-1		...SPRING.....		EA		4							
				S1610-25088-1		...SPRING.....		EA		8							
				S510353		...WASHER.....		EA		9							
P	H		1560-733-2565	S1607-1561-2	<78286>	PARTS KIT,TAIL ROTOR..... ASSEMBLY U/O PN S1610-31100-19,FIG.38		EA			REF	REF	REF				
				71A7056		...SEAL.....		EA		8							
				71A7085		...SEAL.....		EA		4							
P	D		1615-715-2252	S1607-1098-2	<78286>	PARTS KIT,MAIN ROTOR ASSEMBLY U/O 1615-611-3886,FIG.12		EA									
						...PIN,TYPE A.....		EA		4							
						...PLUG.....		EA		1							

(1) SOURCE, MAINT AND REC CODE (a) SOURCE CODE	(b) MAINT LEVEL	(c) REC CODE	(2) FEDERAL STOCK NUMBER	(3) DESCRIPTION REFERENCE NUMBER			MODELS USABLE ON CH-34C	(4) UNIT OF ISSUE	(5) QTY INC IN UNIT PACK	(6) QTY INC IN UNIT	(7) 30-DAY DS/GS MAINT ALW (a) 1-20	(b) 21-50	(c) 51-100	(8) 1-YR ALW PER 100 EQUIP CNTGCY	(9) DEPOT MAINT ALW PER 100 EQUIP	(10) ILLUSTRATION (a) FIG NO	(b) ITEM NO
				NAS50-143		...RING.....		EA		1						KITS	
				NAS50-87		...RING.....		EA		3							
				NAS509-10		...NUT.....		EA		1							
				RR314C		...RING.....		EA		4							
				RR356C		...RING.....		EA		4							
				RR362C		...RING.....		EA		4							
				RR537		...RING.....		EA		1							
				RR87		...RING.....		EA		2							
				S1510-21020-2		...BOOT.....		EA		4							
				111		...PIN.....		EA		1							
				113X27R		...BEARING.....		EA		2							
				52-077-375-1750		...PIN.....		EA		1							
				5200		...LUBRICATOR.....		EA		1							
				59-028-125-0875		...PIN.....		EA		8							
				6465J		...WASHER.....		EA		2							
				6466J		...PLATE.....		EA		2							
				6467J		...SCREW.....		EA		2							
P	H		1615-944-2543	S1607-1097-3	<78286>	PARTS KIT,FLUTTER DAMPER..... RPLS-- 1650-715-2243 U/O 1560-627-2034,FIG.17		KT			REF	REF	REF				
				AN216-1-14		...BALL.....		EA		2							
				AN216-1-8		...BALL.....		EA		2							
				AN500A10-4		...SCREW.....		EA		3							
				AN501A10-6		...SCREW.....		EA		2							
				AN6227B10		...RING.....		EA		2							
				AN6246-16		...RING.....		EA		4							
				AN6289-4		...NUT.....		EA		1							
				AN814-4L		...PLUG.....		EA		1							
				AN833-4		...ELBOW.....		EA		1							
				AN932-1		...PLUG.....		EA		1							
				AN960PD10L		...WASHER.....		EA		2							
				AN960PD416		...WASHER.....		EA		1							
				AN960PD416L		...WASHER.....		EA		8							
				MS21042-4		...NUT.....		EA		1							
				MS21044N12		...NUT.....		EA		8							
				MS28777-4		...RING.....		EA		1							
				NAS143-4C		...WASHER.....		EA		8							
				NAS144-16		...BOLT.....		EA		8							
				NAS2-201		...LUBRICATOR.....		EA		1							
				S1510-26017		...WASHER.....		EA		2							
				S1610-24028		...BOLT.....		EA		20							
				S1610-26034-1		...BUSHING.....		EA		2							
				S1610-26035		...WASHER.....		EA		4							
				S1610-26050-4		...VALVE ASSEMBLY.....		EA		2							
				S1610-26077		...PLUG.....		EA		8							
				52-028-125-1125		...PIN.....		EA		1							
P	F		1620-777-0011	1143	<84685>	REPAIR KIT,CYLINDER,MASTER... U/O 1620-028-0859,FIG.104A		EA			REF	REF	REF	REF			
				AN6227-10		...PACKING,PREFORMED.....		EA		1							
				AN6227-11		...PACKING,PREFORMED.....		EA		1							
				AN6227-13		...PACKING,PREFORMED.....		EA		1							
				AN6227-14		...PACKING,PREFORMED.....		EA		1							

(1) SOURCE, MAINT AND REC CODE (a) SOURCE CODE	(b) MAINT LEVEL	(c) REC CODE	(2) FEDERAL STOCK NUMBER	(3) DESCRIPTION REFERENCE NUMBER			MODELS USABLE ON CH-34C	(4) UNIT OF ISSUE	(5) QTY INC IN UNIT PACK	(6) QTY INC IN UNIT	(7) 30-DAY DS/GS MAINT ALW (a) 1-20	(b) 21-50	(c) 51-100	(8) 1-YR ALWPER 100 EQUIP CNTGCY	(9) DEPOT MAINT ALWPER 100 EQUIP	(10) ILLUSTRATION (a) FIG NO	(b) ITEM NO
				AN6227-15		...PACKING,PREFORMED.....		EA		2						KITS	
				AN6227-20		...PACKING,PREFORMED.....		EA		1							
				AN6227-27		...PACKING,PREFORMED.....		EA		1							
				AN6227-3		...PACKING,PREFORMED.....		EA		1							
				AN6227-6		...PACKING,PREFORMED.....		EA		1							
				AN6227-8		...PACKING,PREFORMED.....		EA		1							
				HPB114133		...GASKET.....		EA		1							
P	F		1620-953-2354	S1607-5577-5	<78286>	PARTS KIT,TAIL WHEEL OLEO.... RPLS-- 1620-715-2265 U/O 1560-564-1508,FIG.166		EA			REF	REF	REF				
				AN6227B32		...PACKING.....		EA		1							
				AN623086		...GASKET.....		EA		1							
				MS28774-228		...RETAINER.....		EA		2							
				MS28774-329		...RETAINER.....		EA		2							
				MS28776-21		...SCRAPER.....		EA		1							
				S1625-50542		...PIN.....		EA		1							
P	H		1620-987-1359	S1607-5580-3	<78286>	PARTS KIT,OLEO ASSEMBLY..... RPLS-- 1620-629-1597, 1620-974-7729 U/O 1560-098-1564,FIG.164		EA			REF	REF	REF				
				AN6227B37		...PACKING.....		EA		1							
				AN6230B11		...GASKET.....		EA		1							
				AN6231A26		...SCRAPER.....		EA		1							
				MS28774-233		...RETAINER.....		EA		2							
				MS28774-234		...RETAINER.....		EA		2							
P	F		1620-996-3909	S1607-5577-4	<78286>	PARTS KIT,TAIL WHEEL OLEO.... RPLS-- 1620-715-2264 U/O 1560-564-1508,FIG.166		EA			REF	REF	REF				
				S1625-50532		...BUSHING.....		EA		2							
				S1625-50542-1		...PIN.....		EA		4							
P	H		1630-707-6864	9400003	<73842>	PARTS KIT,ROTOR BRAKE U/O... 1630-624-3430,FIG.84A		EA			*	REF	REF	REF			
				AN365-820		...NUT.....		EA		2							
				AN520-10-5		...SCREW.....		EA		2							
				AN6204-1		...VALVE.....		EA		2							
				AN6227B33		...SEAL.....		EA		2							
				AN6227B5		...SEAL.....		EA		2							
				AN6290-8		...GASKET.....		EA		4							
				AN960-816		...WASHER.....		EA		4							
				MS28778-4		...PACKING,PREFORMED.....		EA		2							
				NK526-632-5		...SCREW.....		EA		4							
				1604-73		...PLUG.....		EA		2							
				511820-7		...WASHER.....		EA		2							
				511846-4		...WASHER.....		EA		2							
				9420392		...BRAKE LINING.....		EA		2							
				9510895		...PIN.....		EA		2							
P	H		1630-732-1763	E10000-1	<81039>	PARTS KIT,MAGNETIC BRAKE..... <OVERHAUL> RPLS-- 1630-765-5507 U/O 1630-589-4157, 1680-604-8381,& 1680-715-9537,FIG.90		EA			*	*	*	REF			

(1) SOURCE, MAINT AND REC CODE (a) SOURCE CODE	(b) MAINT LEVEL	(c) REC CODE	(2) FEDERAL STOCK NUMBER	REFERENCE NUMBER	(3) DESCRIPTION	MODELS USABLE ON CH-34C	(4) UNIT OF ISSUE	(5) QTY INC IN UNIT PACK	(6) QTY INC IN UNIT	(7) 30-DAY DS/GS MAINT ALW (a) 1-20	(b) 21-50	(c) 51-100	(8) 1-YR ALW PER 100 EQUIP CNTGCY	(9) DEPOT MAINT ALW PER 100 EQUIP	(10) ILLUSTRATION (a) FIG NO	(b) ITEM NO
					...PIN,GROOVE-3/32 IN.DIA X.. 1/4 IN.LG,TYPE I, SAE6150,F.O.50-55		EA		2						KITS	
				AN22-18A	...BOLT.....		EA		2							
				AN3102A14S9P	...RECEPTACLE.....		EA		1							
			5305-151-2943	AN500-8-12 <88044>	...SCREW.....											
				AN500A2-3	...SCREW.....		EA		4							
				AN500A4-4	...SCREW.....		EA		8							
				AN505-4-22	...SCREW.....		EA		1							
				AN505-4-3	...SCREW.....		EA		4							
				AN505-8R18	...SCREW.....		EA		1							
				AN505-8R20	...SCREW.....		EA		1							
				AN526DD632-3	...SCREW.....		EA		4							
				AN960-8L	...WASHER.....		EA		2							
				E1024	...SHIM SET.....		EA		1							
				E1356	...SHIM SET.....		EA		2							
				E1356M3	...ADAPTER.....		EA		1							
				E1471M1	...WASHER.....		EA		2							
				E1641	...RING.....		EA		2							
				E194M3	...SPRING.....		EA		1							
				E201M7	...DISK ASSEMBLY.....		EA		1							
				E2175M1	...BEARING.....		EA		1							
				E2460	...RING.....		EA		1							
				E3188M1	...WASHER.....		EA		1							
				E381	...WASHER.....		EA		15							
				E3923M1	...LINING.....		EA		1							
				E489	...SHIM.....		EA		5							
				E4965	...BUSHING.....		EA		1							
				E779	...BUSHING.....		EA		1							
				E8501	...PLATE.....		EA		1							
				E878	...SHIM SET.....		EA		1							
				MS171436	...PIN.....		EA		1							
				MS20364-836	...NUT.....		EA		2							
				MS20365-440	...NUT.....		EA		1							
				MS9048-004	...PIN.....		EA		1							
				4131102-2A1A	...BEARING.....		EA		3							
				4131104-0A1A	...BEARING.....		EA		2							
				4131104-2A1A	...BEARING.....		EA		1							
P	H		1630-733-8381	9011-1-19 <07915>	PARTS KIT,BRAKE CYLINDER..... U/O 1650-589-4153,FIG.85B		EA			*	REF	REF	REF			
				AN381-1-16	...PIN.....		EA		2							
				AN381-2-20	...PIN.....		EA		1							
				T1011	...FUNCTIONAL TEST PROCEDURES		EA		1							
				79-012-062-0500	...PIN.....		EA		2							
				79-028-125-0750	...PIN.....		EA		1							
				79-028-125-1500	...PIN.....		EA		1							
				9011-1-14	...VALVE.....		EA		1							
				9011-1-18B	...PIN.....		EA		2							
				9011-1-2	...SPRING.....		EA		1							
				9011-1-6	...SPRING.....		EA		1							
				9011-1-7	...SPRING.....		EA		1							
				9011-1-8	...PIN.....		EA		2							

(1) SOURCE, MAINT AND REC CODE (a) SOURCE CODE	(b) MAINT LEVEL	(c) REC CODE	(2) FEDERAL STOCK NUMBER	(3) DESCRIPTION REFERENCE NUMBER			MODELS USABLE ON CH-34C	(4) UNIT OF ISSUE	(5) QTY INC IN UNIT PACK	(6) QTY INC IN UNIT	(7) 30-DAY DS, GS MAINT ALW (a) 1-20	(b) 21-50	(c) 51-100	(8) 1-YR ALWPER 100 EQUIP CNTGCY	(9) DEPOT MAINT ALWPER 100 EQUIP	(10) ILLUSTRATION (a) FIG NO	(b) ITEM NO
				9011-1-9		...PIN.....		EA		1						KITS	
P	F		1630-733-8382	9011-1-20	<07915>	PARTS KIT,BRAKE CYLINDER..... U/O 1650-589-4153,FIG.85B		EA			REF	REF	REF	REF			
				AN365D624		...LOCKNUT.....		EA		1							
				AN381-2-6		...PIN.....		EA		2							
				AN6227-17		...PACKING,PREFORMED.....		EA		3							
				AN6227-8		...PACKING,PREFORMED.....		EA		1							
				AN6290-2		...GASKET.....		EA		1							
				AN6290-6		...PACKING,PREFORMED.....		EA		1							
				MS28774-212		...RING.....		EA		1							
				MS28775-022		...PACKING,PREFORMED.....		EA		1							
						...PIN,COTTER-1/32 IN.X..... 1-1/2 IN.		EA		1							
				79-012-062-1000		...PIN.....		EA		1							
				9011-1-11		...GASKET.....		EA		2							
P	H		1630-778-2232	1142	<84685>	REPAIR KIT,MASTER CYLINDER... U/O 1620-028-0859,FIG.104A		EA			*	REF	REF	REF			
				AN535-00-2		...SCREW.....		EA		2							
				AN565A6H2		...SCREW.....		EA		1							
				AN565DH3		...SCREW.....		EA		2							
				HPB114114		...WASHER.....		EA		1							
				HPB114117		...SPRING.....		EA		1							
				HPB114119		...NUT.....		EA		1							
				HPB114120		...DISK.....		EA		1							
				HPB114122		...NUT.....		EA		1							
				HPB114129		...SPRING.....		EA		1							
				HPB114132		...CAP.....		EA		1							
				HPB114133		...GASKET.....		EA		1							
				HPB114134		...NAMEPLATE.....		EA		1							
				HPB114136		...SPRING.....		EA		1							
				HPC104114		...SPRING.....		EA		1							
				P4		...PLUG-W/GASKET.....		EA		1							
P	H		1630-778-2972	E10169	<81039>	PARTS KIT,BRAKE,MAGNETIC..... OVERHAUL U/O 1680-604-8381, 1680-715-9537,FIG.90		EA			*	*	*	REF			
				AN22-18A		...BOLT.....		EA		2							
				AN3102A14S9P		...RECEPTACLE.....		EA		1							
				AN500-8-10		...SCREW.....		EA		2							
				AN500A2-3		...SCREW.....		EA		4							
				AN500A4-4		...SCREW.....		EA		8							
				AN505-4-4		...SCREW.....		EA		4							
				AN505-8R18		...SCREW.....		EA		1							
				AN526DD632-3		...SCREW.....		EA		2							
				AN535-0-3		...SCREW.....		EA		2							
				E1024		...SHIM.....		EA		3							
				E1356		...SHIM.....		EA		1							
				E1356M3		...ADAPTER.....		EA		1							
				E1637M2		...LINER.....		EA		1							
				E194M3		...SPRING.....		EA		1							
				E201M7		...DISK ASSEMBLY.....		EA		1							
				E2175M1		...BEARING.....		EA		1							

(1) SOURCE, MAINT AND REC CODE (a) SOURCE CODE	(b) MAINT LEVEL	(c) REC CODE	(2) FEDERAL STOCK NUMBER	REFERENCE NUMBER	(3) DESCRIPTION	MODELS USABLE ON CH-34C	(4) UNIT OF ISSUE	(5) QTY INC IN UNIT PACK	(6) QTY INC IN UNIT	(7) 30-DAY DS/GS MAINT ALW (a) 1-20	(b) 21-50	(c) 51-100	(8) 1-YR ALW PER 100 EQUIP CNTGCY	(9) DEPOT MAINT ALW PER 100 EQUIP	(10) ILLUSTRATION (a) FIG NO	(b) ITEM NO
				E2265	...SHIM.....		EA		1						KITS	
				E2460	...RING.....		EA		1							
				E2917M1	...SCREW.....		EA		1							
				E779	...BUSHING.....		EA		1							
				MS16624-37	...RING.....		EA		1							
				MS20364-836	...NUT.....		EA		1							
				MS9048-003	...PIN.....		EA		2							
				MS9048-004	...PIN.....		EA		1							
					...PIN,GROOVE <3-32X1-2>.....		EA		1							
					...PIN,GROOVE <3-32X1-4>.....		EA		2							
				4131102-2A1A	...BEARING.....		EA		3							
				4131104-0A1A	...BEARING.....		EA		2							
				4131104-2A1A	...BEARING.....		EA		1							
P	H		1630-785-3637	E10168 <81039>	PARTS KIT,BRAKE ASSEMBLY..... U/O 1680-604-8381, 1680-715-9537,FIG.90		EA			*	*	REF				
				AN22-18A	...BOLT.....		EA		1							
				AN3102A	...RECEPTACLE.....		EA		1							
				AN364-836	...NUT.....		EA		1							
				AN500-8-10	...SCREW.....		EA		2							
				AN500A2-3	...SCREW.....		EA		4							
				AN500A4-4	...SCREW.....		EA		8							
				AN505-4-4	...SCREW.....		EA		4							
				AN505-8R18	...SCREW.....		EA		1							
				AN505-8R20	...SCREW.....		EA		1							
				AN526DD632-3	...SCREW.....		EA		2							
				AN535-0-3	...SCREW.....		EA		2							
				E1024	...SHIM.....		EA		3							
				E1356	...SHIM.....		EA		1							
				E1356M3	...ADAPTER.....		EA		1							
				E1641	...RING.....		EA		2							
				E194M3	...SPRING.....		EA		1							
				E201M7	...DISK ASSEMBLY.....		EA		1							
				E2175M1	...BEARING.....		EA		1							
				E2460	...RING.....		EA		1							
				E3188M1	...WASHER.....		EA		1							
				E779	...BUSHING.....		EA		1							
				E878	...SHIM.....		EA		2							
				MS171436	...PIN.....		EA		1							
					...PIN GROOVE <3-32Y1-4>.....		EA		2							
				R4X1E	...BEARING.....		EA		2							
				52-012-062-0312	...PIN.....		EA		1							
				77R2X1E	...BEARING.....		EA		3							
				77R4X1E	...BEARING.....		EA		1							
P	H		1630-981-3073	9500266 <73842>	PARTS KIT,BRAKE ASSEMBLY..... <OVERHAUL> RPLS-- 1630-708-1446, 1630-708-1448,& 1650-654-6956 U/O 1630-370-7266,FIG.162A		EA			REF	REF	REF	REF			
				AN501A10-4	...SCREW.....		EA		2							
				AN520-10-5	...SCREW.....		EA		1							

(1) SOURCE, MAINT AND REC CODE (a) SO. REF CODE	(b) MAINT LEVEL	(c) REC CODE	(2) FEDERAL STOCK NUMBER	REFERENCE NUMBER	(3) DESCRIPTION	MODELS USABLE ON CH-34C	(4) UNIT OF ISSUE	(5) QTY INC IN UNIT PACK	(6) QTY INC IN UNIT	(7) 30-DAY DS, GS MAINT ALW (a) 1-20	(b) 21-50	(c) 51-100	(8) 1 YR ALW PER 100 EQUIP CNTGCY	(9) DEPOT MAINT ALW PER 100 EQUIP	(10) ILLUSTRATION (a) FIG NO	(b) ITEM NO
				AN6204-1	...VALVE.....		EA		1						KITS	
				AN6227B30	...PACKING.....		EA		3							
				AN6227B5	...PACKING,PREFORMED.....		EA		3							
				AN6230B6	...GASKET.....		EA		3							
				MS28778-8	...GASKET.....		EA		2							
				NAS669-137P	...RING.....		EA		3							
				1604-73	...PLUG.....		EA		1							
				511810	...PIN.....		EA		3							
				511811	...SPRING.....		EA		3							
				511812A	...PLATE.....		EA		3							
				511820-7	...WASHER.....		EA		3							
				511846-4	...WASHER.....		EA		3							
				9521604	...LINING.....		EA		6							
				9522159	...NUT.....		EA		3							
				9522728	...GRIP AND PILOT PIN.....		EA		3							
P	F		1650-672-7943	912333	<62983> REPAIR KIT,VALVE,CURE DATE... U/D 1650-439-1140,FIG.35A		EA			*	REF	REF				
				AN6227B23	...RING.....		EA		1							
				AN6227B5	...RING.....		EA		1							
				AN6290-8	...GASKET.....		EA		2							
				135251	...CAP.....		EA		2							
				146439	...GASKET.....		EA		2							
				614002	...PLUG.....		EA		3							
				79738	...CAP.....		EA		1							
P	H		1650-690-2039	912641	<62983> PARTS KIT,VALVE,OVERHAUL..... U/D 1650-439-1140,FIG.35A		EA			*	REF	REF				
				AN380-2-1	...PIN.....		EA		2							
				AN393-33	...PIN.....		EA		2							
				AN535-00-2	...SCREW.....		EA		2							
				AN73-4	...BOLT.....		EA		8							
				AN73-5	...BOLT.....		EA		2							
				AN73-6	...BOLT.....		EA		2							
				AN814-8DL	...PLUG.....		EA		1							
				AN815-8D	...UNION.....		EA		1							
				AN960-10L	...WASHER.....		EA		14							
				AN960-416L	...WASHER.....		EA		1							
				120824	...PLUG.....		EA		1							
				147401	...PIN.....		EA		1							
				3X1601	...KEY.....		EA		1							
				3X83312	...SHIM.....		EA		3							
				3X84185	...PIN.....		EA		2							
				3X93145	...LEVER.....		EA		2							
				3X95637	...SPRING.....		EA		1							
				74687	...PLATE.....		EA		1							
P	F		1650-715-2266	S1607-5579-2	<78286> PARTS KIT,HYDRAULIC..... RPLS-- 1650-629-1599 U/D PN S1665-61521,FIG.149		EA			*	REF	REF				
				AN6227B6	...PACKING,PREFORMED.....		EA		1							
				AN6230B6	...PACKING,PREFORMED.....		EA		1							
				AN6236-1	...FILTER ELEMENT.....		EA		1							
				AN6238-1	...GASKET.....		EA		2							
				MS28778-5	...GASKET.....		EA		1							

(1) SOURCE, MAINT AND REC CODE (a) SOURCE CODE	(b) MAINT LEVEL	(c) REC CODE	(2) FEDERAL STOCK NUMBER	REFERENCE NUMBER	(3) DESCRIPTION	MODELS USABLE ON CH-34C	(4) UNIT OF ISSUE	(5) QTY INC IN UNIT PACK	(6) QTY INC IN UNIT	(7) 30-DAY DS/GS MAINT ALW (a) 1-20	(b) 21-50	(c) 51-100	(8) 1-YR ALW PER 100 EQUIP CNTGCY	(9) DEPOT MAINT ALW PER 100 EQUIP	(10) ILLUSTRATION (a) FIG NO	(b) ITEM NO
				MS28778-6	...GASKET.....		EA		1						KITS	
				MS29561-261	...PACKING,PREFORMED.....		EA		2							
				S1565-20066	...GASKET.....		EA		1							
P	F		1650-715-2270	S1607-5576-2 <78286>	PARTS KIT,SERVO ACTUATOR..... U/O 1650-332-7208, 1650-564-1581,FIG.92		EA			*	REF	REF				
				AN316-4R	...NUT.....		EA		1							
				AN500AC10-7	...SCREW.....		EA		1							
				AN960PD10L	...WASHER.....		EA		1							
				NAS460-416	...WASHER.....		EA		1							
				S1565-61577	...SPRING.....		EA		1							
				S1565-61582	...WASHER.....		EA		1							
				AN565DC8H2	...SCREW.....		EA		1							
				AN6227-14	...PACKING.....		EA		4							
				MS25178-10	...SHIPPING CAP.....		EA		1							
				MS28782-14	...RING.....		EA		6							
				23894	...SPRING.....		EA		1							
				43101-37	...SCREW <AN148576>.....		EA		4							
				43413-5	...SHIPPING WASHER.....		EA		3							
				45197-6	...SHIPPING PLUG <SPG>.....		EA		3							
				51022	...SPACER.....		EA		1							
				51965	...PLUG.....		EA		1							
P	H		1650-717-2361	K46-1 <90166>	PARTS KIT,PUMP U/O..... 1650-289-8605,FIG.181A		EA			REF	REF	REF	REF			
				MS28775-010	...PACKING,PREFORMED.....		EA		2							
				MS28775-012	...PACKING.....		EA		7							
				MS28775-116	...PACKING.....		EA		2							
				MS28775-211	...PACKING.....		EA		1							
				MS28775-212	...PACKING.....		EA		1							
				MS28775-214	...PACKING.....		EA		1							
				MS28775-229	...PACKING.....		EA		3							
				PB1053-18	...RING.....		EA		1							
				P1000-10	...PLUG.....		EA		1							
				P1000-12	...PLUG.....		EA		1							
				P1000-6	...PLUG.....		EA		1							
				P1001-10	...GASKET.....		EA		1							
				P1001-12	...GASKET.....		EA		1							
				P1001-6	...GASKET.....		EA		1							
				P1052-8	...RING.....		EA		1							
				P148	...SCREW.....		EA		6							
				P646	...GASKET.....		EA		1							
P	H		1650-717-2362	K47-1 <90166>	PARTS KIT,PUMP U/O..... 1650-289-8605,FIG.181A		EA			REF	REF	REF	REF			
				AN535-0-2	...SCREW.....		EA		4							
				AN814-4DL	...PLUG AND BLEEDER.....		EA		1							
				P1030	...NUT.....		EA		1							
				P390	...FASTENER.....		EA		2							
				P402	...PROTECTOR.....		EA		1							
				P729	...SCREW.....		EA		5							
				P893	...ORIFICE.....		EA		1							
				1618	...PIN.....		EA		1							
				1686	...NAMEPLATE.....		EA		1							

(1) SOURCE, MAINT AND REC CODE (a) SOURCE CODE	(b) MAINT LEVEL	(c) RLC CODE	(2) FEDERAL STOCK NUMBER	(3) DESCRIPTION REFERENCE NUMBER			MODELS USABLE ON CH-34C	(4) UNIT OF ISSUE	(5) QTY INC IN UNIT PACK	(6) QTY INC IN UNIT	(7) 30-DAY DS/GS MAINT ALW (a) 1-20	(b) 21-50	(c) 51-100	(8) 1-YR ALW PER 100 EQUIP CNTGCY	(9) DEPOT MAINT ALW PER 100 EQUIP	(10) ILLUSTRATION (a) FIG NO	(b) ITEM NO
				5100-50		...RING.....		EA		1						KITS	
				65A58		...WASHER.....		EA		10							
				67A10		...HEAD.....		EA		9							
				67A1123		...SPRING.....		EA		9							
				67A1183-4		...RETAINER.....		EA		1							
				67A1387		...WASHER.....		EA		1							
				67A358		...SPRING.....		EA		9							
				67A370		...RETAINER.....		EA		1							
				67A386		...SCREW.....		EA		1							
				67A389		...BEARING.....		EA		1							
				67A393		...CHECK.....		EA		9							
				67A398		...BEARING.....		EA		1							
				67A638		...SEAT.....		EA		1							
				67A639		...SEAL.....		EA		1							
				67A640		...SCREEN.....		EA		2							
				67A641		...SCREW.....		EA		1							
				67B1003-7		...SPRING.....		EA		1							
P	F		1660-716-3441	63C65	<58588>	PARTS KIT,IGNITION ASSEMBLY.. U/O 4520-610-6405,FIG.123A		EA			*	*	*				
				MS29513-219		...PACKING.....		EA		1							
				12C60		...VIBRATOR.....		EA		1							
				14C23		...SHIELD.....		EA		1							
P	H		1680-416-2499	BL2984	<08484>	REPAIR KIT,WINCH,RESCUE..... U/O 1680-673-2961,FIG.125A		EA			*	*	*				
				AL1256-17		...WASHER.....		EA		1							
				AL1256-2		...WASHER.....		EA		4							
				AL1256-34		...WASHER.....		EA		1							
				AL1256-4		...WASHER.....		EA		4							
				AL1256-40		...WASHER.....		EA		4							
				AL2274		...SLEEVE.....		EA		2							
				AL2593-6		...SPACER.....		EA		1							
				AN123903		...PACKING PREFORMED.....		EA		1							
				AN125908		...PLUG.....		EA		1							
				AN365-1032		...NUT.....		EA		3							
				AN365-632		...NUT.....		EA		4							
				AN380-3-3		...PIN.....		EA		1							
				AN500A10-7		...SCREW.....		EA		1							
				AN500A4-8		...SCREW.....		EA		4							
				AN505-10-8		...SCREW.....		EA		8							
				AN565B1024H6		...SCREW.....		EA		2							
				AN960-10L		...WASHER.....		EA		1							
				AN960-416L		...WASHER.....		EA		4							
				BL1297		...LABEL.....		EA		1							
				BL1310		...KEY.....		EA		1							
				BL1511		...BRACKET.....		EA		1							
				BL1523		...PIN.....		EA		2							
				BL1527		...SPACER.....		EA		1							
				BL1535		...SPRING.....		EA		1							
				BL1547		...BUMPER.....		EA		1							
				BL1556		...GASKET.....		EA		1							
				BL1557		...LINING.....		EA		1							
				BL1569		...SPRING.....		EA		1							

(1) SOURCE, MAINT AND REC CODE (a) SOURCE CODE	(b) MAINT LEVEL	(c) RECOV CODE	(2) FEDERAL STOCK NUMBER	(3) DESCRIPTION REFERENCE NUMBER			MODELS USABLE ON CH-34C	(4) UNIT OF ISSUE	(5) QTY INC IN UNIT PACK	(6) QTY INC IN UNIT	(7) 30-DAY DS GS MAINT ALW (a) 1-20	(b) 21-50	(c) 51-100	(8) 1-YR ALW PER 100 EQUIP CNTGCY	(9) DEPOT MAINT ALW PER 100 EQUIP	(10) ILLUSTRATION (a) FIG NO	(b) ITEM NO
				BL1578		...LABEL		EA		2						KITS	
				BL1773		...STRAP		EA		3							
				BL1822		...NAMEPLATE		EA		1							
				BL1844-3		...CLAMP		EA		1							
				BL1919		...VALVE ASSEMBLY		EA		1							
				BL2294		...LABEL		EA		1							
				BL655-10-56F		...SCREW		EA		3							
				BL656-6-20F		...SCREW		EA		2							
				BL747		...SPACER		EA		1							
				BL761		...COVER		EA		1							
				MS24665-155		...PIN,COTTER		EA		3							
				RR145		...RING		EA		1							
				RST50		...RING		EA		1							
				RST78		...RING		EA		1							
				VJ71		...WASHER		EA		3							
				VJ83		...BEARING		EA		3							
				Y1112-10-16FJ		...SCREW		EA		11							
				Y1112-416-20FH		...SCREW		EA		4							
				Y1112-6-12F		...SCREW		EA		2							
				Y1112-6-32F		...SCREW		EA		2							
				Y1113-10-16FH		...SCREW		EA		4							
				1041-31		...BUMPER		EA		1							
				1820-27		...PACKING,PREFORMED		EA		1							
				1820-6		...PACKING,PREFORMED		EA		1							
				208C10JPPOL		...BEARING		EA		2							
				208C19XOB		...BEARING		EA		1							
				212		...KEY		EA		1							
				4B1C00XOB		...BEARING		EA		1							
				4B1C12WPPOL		...BEARING		EA		1							
				4508-18		...BEARING		EA		2							
				52-018-078-0625		...PIN		EA		1							
				6B1C00XOB		...BEARING		EA		1							
				9		...CAP		EA		1							
P	F		1680-416-2500	BL2985	<08484>	REPAIR KIT,WINCH,RESCUE U/O 1680-673-2961,FIG.125A		EA			*	*	*	REF			
				AN6227B10		...PACKING,PREFORMED		EA		1							
				AN6290-5		...GASKET		EA		1							
				BL1888		...PIN		EA		1							
				BL1889		...HEAD ASSEMBLY		EA		1							
						PARTS,KIT,FUEL <CURE DATE> U/O 2915-202-5827,FIG.81A				REF							
				MS29513-012		...PACKING		EA		1							
				MS29513-131		...PACKING		EA		2							
				MS29513-136		...PACKING		EA		1							
				MS29513-008		...PACKING		EA		1							
				RA11229		...BUSHING		EA		1							
				RB11226		...GASKET		EA		1							
				RB12122-112		...PACKING		EA		1							
				RB12449-1		...SCREW		EA		2							
				600-001-10		...PACKING W-RETAINER		EA		2							
P	H		2915-605-9862	TF174	<59874>	PARTS KIT,PUMP,OVERHAUL		EA			*	*	*				

(1) SOURCE, MAINT AND REC CODE (a) SOURCE CODE	(b) MAINT LEVEL	(c) REC CODE	(2) FEDERAL STOCK NUMBER	REFERENCE NUMBER	(3) DESCRIPTION	MODELS USABLE ON CH-34C	(4) UNIT OF ISSUE	(5) QTY INC IN UNIT PACK	(6) QTY INC IN UNIT	(7) 30-DAY DS/GS MAINT ALW (a) 1-20	(b) 21-50	(c) 51-100	(8) 1-YR ALWPER 100 EQUIP CNTGCY	(9) DEPOT MAINT ALWPER 100 EQUIP	(10) ILLUSTRATION (a) FIG NO	(b) ITEM NO
					CONTINUED										KITS	
					U/O 2915-289-8412,FIG.175											
				TF107	...WASHER.....		EA		1							
				TF110	...PIN.....		EA		1							
				TF119	...RING.....		EA		1							
				TF121	...RETAINER.....		EA		1							
				TF126	...RING.....		EA		1							
				TF147	...SCREW ASSEMBLY.....		EA		1							
				TF151	...RING.....		EA		1							
				TF152-1	...WASHER.....		EA		1							
				TF155-1	...PLUG.....		EA		1							
				TF188	...SCREW.....		EA		4							
				TF822-1	...SEAL.....		EA		1							
				TF824	...CUP.....		EA		1							
				TF825	...SPRING.....		EA		1							
				TF827-1	...RING.....		EA		1							
				TF857	...SPRING.....		EA		1							
				TF873-1	...RING.....		EA		1							
				TX90047-21	...SCREW.....		EA		3							
				TX90790-4	...WASHER.....		EA		5							
				TX90790-5	...WASHER.....		EA		4							
				TX90903-1	...PLUG.....		EA		5							
				TX93001-3	...BOLT.....		EA		2							
				TX94000-1	...BLOCK.....		EA		1							
				TX94003	...PLUG.....		EA		1							
				TX94003-4	...PLUG.....		EA		2							
				TX94003-5	...PLUG.....		EA		2							
P	F		2915-653-7212	20-0446-3 <70138>	PARTS KIT,VALVE ASSEMBLY.....		EA			*	*	*				
					U/O 2915-310-5389,FIG.79B											
					2915-310-5389,FIG.79B											
				AN501-416-6	...SCREW.....		EA		2							
				AN503-8-10	...SCREW.....		EA		6							
				AN503-8-12	...SCREW.....		EA		2							
				AN960-8L	...WASHER.....		EA		8							
				104626-58	...PIN.....		EA		1							
				20-0067	...SPRING.....		EA		1							
				20-0076	...BALL AND PIN ASSEMBLY.....		EA		1							
				20-0106	...CLIP.....		EA		3							
				22NTM82	...NUT.....		EA		8							
				31-0737-1	...DIAPHRAGM.....		EA		1							
				648112-4	...COVER.....		EA		1							
P	H		2915-654-9611	32-0022 <77200>	REPAIR KIT,PUMP OVERHAUL,....		EA			*	*	*				
					U/O 2915-373-8746,FIG.175											
				AN500A10-10	...SCREW.....		EA		2							
				AN500A10-24	...SCREW.....		EA		4							
				AN500A8-10	...SCREW.....		EA		6							
				AN535-00-2	...SCREW.....		EA		3							
				AN913-1S	...PLUG.....		EA		4							
				M400-13	...PLATE-LOCK.....		EA		1							
				M400-17	...SCREW.....		EA		1							
				M400-19	...PLUG-SHIPPING.....		EA		2							
				M400-21	...NAMEPLATE.....		EA		1							

(1) SOURCE, MAINT AND REC CODE (a) SOURCE CODE	(b) MAINT LEVEL	(c) REC CODE	(2) FEDERAL STOCK NUMBER	(3) DESCRIPTION REFERENCE NUMBER			MODELS USABLE ON CH-34C	(4) UNIT OF ISSUE	(5) QTY INC IN UNIT PACK	(6) QTY INC IN UNIT	(7) 30-DAY DS/GS MAINT ALW (a) 1-20	(b) 21-50	(c) 51-100	(8) 1-YR ALW PER 100 EQUIP CNTGCY	(9) DEPOT MAINT ALW PER 100 EQUIP	(10) ILLUSTRATION (a) FIG NO	(b) ITEM NO
				M400-21G		...NAMEPLATE.....		EA		1						KITS	
				M400-23		...GASKET.....		EA		1							
				M400-24C		...BLOCK-SHIPPING.....		EA		1							
				M400-25		...WASHER.....		EA		2							
				M400-5C		...BLADE.....		EA		4							
				R400-100		...SNAP RING.....		EA		1							
				R400-64		...SCREW.....		EA		4							
				R400-67A		...WASHER.....		EA		1							
				R400-68		...NUT.....		EA		1							
				R400-68A		...WASHER.....		EA		1							
				R400-69D		...SPRING.....		EA		1							
				R400-69E		...SPRING.....		EA		1							
				R400-71		...VENT PLUG.....		EA		1							
				R400-81		...DISK.....		EA		1							
				R400-81A		...DISK.....		EA		1							
				R400-82		...SPRING.....		EA		1							
				R400-96		...SPRING.....		EA		1							
				R600-88		...NUT,ADJUSTMENT.....		EA		1							
				R600-93		...SCREW,ADJUSTMENT.....		EA		1							
				R600-97		...WASHER.....		EA		6							
				172-32B		...NAMEPLATE.....		EA		1							
				194-22		...WASHER.....		EA		4							
				194-23A		...SCREW.....		EA		2							
				194-24		...NUT.....		EA		2							
				211-16		...PLUG-SHIPPING.....		EA		2							
				211-23		...SCREW.....		EA		2							
				99-1327		...SPRING.....		EA		1							
P	H		2915-658-9923	32-0023	<77200>	REPAIR KIT,FUEL PUMP U/O.... 2915-373-8746,FIG.175		EA			*	*	*				
				AF934-101		...RING.....		EA		1							
				R400-63B		...GASKET.....		EA		1							
				R400-66B		...DIAPHRAGM.....		EA		1							
				R400-99		...DISK ASSEMBLY.....		EA		1							
P	H		2915-672-6066	RA22380	<51663>	PARTS KIT FUEL PUMP OVERHAUL. RPLS-- 2915-601-0651 U/O 2915-859-8472 FIG.79A		EA			*	*	*	REF			
				AN500A6-3		...SCREW.....		EA		2							
				AN500A8-6		...SCREW.....		EA		3							
				AN505-4-4		...SCREW.....		EA		4							
				AN515-6-5		...SCREW.....		EA		4							
				AN535-00-2		...SCREW.....		EA		4							
				AN814-4DL		...PLUG.....		EA		1							
				AN816-2D		...ADAPTER.....		EA		1							
				AN960-10L		...WASHER,FLAT.....		EA		1							
				AN960-416L		...WASHER.....		EA		1							
				AN960-6L		...WASHER.....		EA		1							
				AN960-8L		...WASHER.....		EA		3							
				AS89548		...SCREW.....		EA		1							
				AS89734		...SPRING.....		EA		8							
				AS90206		...BRUSH WHEN PACKAGING..... SEPARATE MOTOR PARTS		EA		4							
				AS90208		...SPACER.....		EA		4							

(1) SOURCE, MAINT AND REC CODE (a) SOURCE CODE	(b) MAINT LEVEL	(c) REC CODE	(2) FEDERAL STOCK NUMBER	(3) DESCRIPTION REFERENCE NUMBER			MODELS USABLE ON CH-34C	(4) UNIT OF ISSUE	(5) QTY INC IN UNIT PACK	(6) QTY INC IN UNIT	(7) 30-DAY DS GS MAINT ALW (a) 1-20	(b) 21-50	(c) 51-100	(8) 1-YR ALW PER 100 EQUIP CNTGCY	(9) DEPOT MAINT ALW PER 100 EQUIP	(10) ILLUSTRATION (a) FIG NO	(b) ITEM NO
				AS90345		...LEAD.....		EA		1						KITS	
				AS98434		...WIRE.....		EA		1							
				AS98435		...WIRE.....		EA		1							
				L1204		...PLUG.....		EA		1							
				MS122121		...INSERT.....		EA		1							
				MS134352		...BEARING.....		EA		1							
				MS16625-1050		...RING.....		EA		1							
				MS20074-04-31		...BOLT.....		EA		1							
				MS20364-1032C		...NUT,SELF-LOCKING,HEXAGON..		EA		1							
				NAS816-59		...CAP-PLUG.....		EA		2							
				NAS817-16		...CAP.....		EA		1							
				NAS818-4		...PLUG.....		EA		1							
				RA10032-3		...SETSCREW.....		EA		2							
				RA11071		...WASHER.....		EA		1							
				RA11227		...KEY.....		EA		1							
				RA11231		...WASHER.....		EA		1							
				RA11234-1		...SPRING.....		EA		1							
				RA11247		...SEAL.....		EA		1							
				RA11249		...GASKET.....		EA		3							
				RA11249-1		...GASKET.....		EA		3							
				RA11249-2		...GASKET.....		EA		3							
				RA11249-3		...GASKET.....		EA		2							
				RA11253		...WASHER.....		EA		3							
				RA11253-1		...WASHER.....		EA		3							
				RA11253-2		...WASHER.....		EA		3							
				RA11253-3		...WASHER.....		EA		2							
				RA11253-4		...WASHER.....		EA		2							
				RA11253-5		...WASHER.....		EA		2							
				RA11256		...SEAL.....		EA		1							
				RA11257		...SLINGER.....		EA		1							
				RA11268		...SCREEN.....		EA		1							
				RA11322		...CAP.....		EA		1							
				RA15407		...SPRING.....		EA		1							
				RB11269		...PLATE.....		EA		1							
				RB12188		...GUIDE.....		EA		1							
				RB12192		...ADAPTER.....		EA		1							
				RB12311		...TUBE ASSEMBLY.....		EA		1							
				S25071		...WASHER.....		EA		4							
				US40389		...INSULATOR.....		EA		2							
				US60848		...SCREW.....		EA		4							
				US68096		...PIN.....		EA		4							
				1906		...WASHER.....		EA		4							
				31096		...TERMINAL.....		EA		1							
				31879		...TERMINAL.....		EA		3							
P	H		2915-703-8483	TF3506-2	<59875>	PARTS KIT,PUMP RPLS--..... 2915-605-4553 U/O 2915-373-8893, 2915-504-9986,FIG.175		EA			*	*	*				
				MS29513-127		...PACKING.....		EA		1							
				TF160		...GASKET.....		EA		1							
				TF3543		...DIAPHRAGM.....		EA		1							
				TF3559		...GASKET.....		EA		1							

(1) SOURCE, MAINT AND REC CODE (a) SOURCE CODE	(b) MAINT LEVEL	(c) REC CODE	(2) FEDERAL STOCK NUMBER	REFERENCE NUMBER	(3) DESCRIPTION	MODELS USABLE ON CH-34C	(4) UNIT OF ISSUE	(5) QTY INC IN UNIT PACK	(6) QTY INC IN UNIT	(7) 30-DAY DS/GS MAINT ALW (a) 1-20	(b) 21-50	(c) 51-100	(8) 1-YR ALWPER 100 EQUIP CNTGCY	(9) DEPOT MAINT ALWPER 100 EQUIP	(10) ILLUSTRATION (a) FIG NO	(b) ITEM NO
				TF3861	...GASKET.....		EA		1						KITS	
				TF4621	...SEAL.....		EA		1							
				TF823	...DIAPHRAGM SEAL.....		EA		1							
P	H		2915-716-2267	TF181-1 <59875>	PARTS KIT,PUMP RPLS--..... 2915-605-9863 U/O 2915-289-8412,FIG.175		EA			*	*	*				
				MS29513-127	...PACKING <90926-17>.....		EA		1							
				TF134	...VALVE ASSEMBLY.....		EA		1							
				TF142-4	...DIAPHRAGM ASSEMBLY.....		EA		1							
				TF159	...GASKET.....		EA		1							
				TF160	...GASKET.....		EA		1							
				TF2161	...GASKET.....		EA		1							
				TF4621	...SEAL.....		EA		1							
				TF823	...DIAPHRAGM.....		EA		1							
P	H		2915-740-1463	TF3505-2 <59875>	PARTS KIT,PUMP U/O..... 2915-373-8893, 2915-504-9986,FIG.175		EA			*	*	*				
				AN960-10	...WASHER.....		EA		2							
				AN960-416	...WASHER.....		EA		4							
				MS20074-04-17	...BOLT.....		EA		4							
				MS20913-1	...PLUG.....		EA		3							
				TF107	...WASHER.....		EA		1							
				TF110	...PIN.....		EA		1							
				TF119	...RING.....		EA		1							
				TF121	...RETAINER.....		EA		1							
				TF126	...RING.....		EA		1							
				TF155-1	...PLUG.....		EA		2							
				TF3510	...PIN.....		EA		2							
				TF3522	...SEAL.....		EA		1							
				TF3540	...SPRING.....		EA		1							
				TF3541	...DISK.....		EA		1							
				TF3547-1	...ADJUSTMENT SCREW AND..... WASHER ASSEMBLY		EA		1							
				TF3551	...RING.....		EA		1							
				TF3557	...SPRING.....		EA		1							
				TF3558	...NUT.....		EA		1							
				TF3587	...RETAINER.....		EA		1							
				TF3588-1	...WASHER.....		EA		1							
				TF3590	...CUP.....		EA		1							
				TF824	...CUP.....		EA		1							
				TF825	...SPRING.....		EA		1							
				TF873-1	...RING.....		EA		1							
				93001-3	...BOLT.....		EA		2							
				94000-1	...SHIPPING BLOCK.....		EA		1							
				94003	...SHIPPING PLUG.....		EA		1							
				94003-4	...SHIPPING PLUG.....		EA		2							
				94003-5	...SHIPPING PLUG.....		EA		2							
P	H		2915-970-1779	RA22175 <51663>	PARTS KIT U/O..... 2915-202-5827,FIG.81A		EA			REF	REF	REF	REF			
				AN500A6-3	...SCREW.....		EA		2							
				AN500A8-6	...SCREW.....		EA		3							
				AN505-4-4	...SCREW.....		EA		2							

(1) SOURCE, MAINT AND REC CODE (a) SOURCE CODE	(b) MAINT LEVEL	(c) REC CODE	(2) FEDERAL STOCK NUMBER	(3) DESCRIPTION REFERENCE NUMBER		MODELS USABLE ON CH-34C	(4) UNIT OF ISSUE	(5) QTY INC IN UNIT PACK	(6) QTY INC IN UNIT	(7) 30-DAY DS/GS MAINT ALW (a) 1-20	(b) 21-50	(c) 51-100	(8) 1-YR ALW PER 100 EQUIP CNTGCY	(9) DEPOT MAINT ALW PER 100 EQUIP	(10) ILLUSTRATION (a) FIG NO	(b) ITEM NO
				AN515-6-5	...SCREW		EA		2						KITS	
				AN814-4DL	...PLUG		EA		1							
				AN960-10L	...WASHER		EA		1							
				AN960-4L	...WASHER		EA		2							
				AN960-8L	...WASHER		EA		3							
				AS80359	...TERMINAL		EA		1							
				AS88228	...TERMINAL		EA		1							
				AS89546	...SCREW		EA		2							
				AS89547	...SPACER		EA		1							
				AS89549	...WASHER		EA		2							
				AS89734	...SPRING		EA		2							
				AS89747	...INSULATOR		EA		1							
				AS91321	...TUBING		EA		1							
				AS92226	...TUBING		EA		1							
				MS20364-1032C	...NUT		EA		1							
				MS20659-1	...TERMINAL		EA		1							
				MS20659-3	...TERMINAL		EA		1							
				MS20913-1	...PLUG		EA		1							
				RA11071	...WASHER		EA		1							
				RA11227	...KEY		EA		1							
				RA11228-1	...STRAINER		EA		1							
				RA11231	...WASHER		EA		1							
				RA11234	...SPRING		EA		1							
				RA11249	...GASKET		EA		3							
				RA11249-1	...GASKET		EA		3							
				RA11249-2	...GASKET		EA		3							
				RA11249-3	...GASKET		EA		2							
				RA11253	...WASHER		EA		3							
				RA11253-1	...WASHER		EA		3							
				RA11253-2	...WASHER		EA		3							
				RA11253-3	...WASHER		EA		2							
				RA11253-4	...WASHER		EA		2							
				RA11253-5	...WASHER		EA		2							
				RA11256	...SEAL		EA		1							
				RA11257	...SLINGER		EA		1							
				RA8626	...PLUG		EA		1							
				RA8692ST50C	...RING		EA		1							
				RA9684	...SCREW		EA		2							
				RB11235	...STRAINER ASSEMBLY		EA		1							
				RB15257-3	...PLUG		EA		1							
				RB15257-7	...PLUG		EA		2							
				RB15259-3	...PLUG		EA		2							
				RB8515-16-1-1-4	...INSULATION		EA		2							
				US25071	...WASHER		EA		1							
				US40387	...BRUSH HOLDER		EA		1							
				US40388	...INSULATOR		EA		2							
				US40473	...RIVET		EA		2							
				US60848	...SCREW		EA		2							
				US67892	...WASHER		EA		4							
				US68096	...PIN		EA		2							
				US76357	...BRUSH		EA		2							
				36KDDLT	...BEARING		EA		1							

(1) SOURCE, MAINT AND REC CODE (a) SOURCE CODE	(b) MAINT LEVEL	(c) REC CODE	(2) FEDERAL STOCK NUMBER	(3) DESCRIPTION REFERENCE NUMBER		MODELS USABLE ON CH-34C	(4) UNIT OF ISSUE	(5) QTY INC IN UNIT PACK	(6) QTY INC IN UNIT	(7) 30-DAY DS/GS MAINT ALW (a) 1-20	(b) 21-50	(c) 51-100	(8) 1-YR ALW PER 100 EQUIP CNTGCY	(9) DEPOT MAINT ALW PER 100 EQUIP	(10) ILLUSTRATION (a) FIG NO	(b) ITEM NO
				38KDDLT	...BEARING.....		EA		1						KITS	
P	H		2915-766-6739	RA22176	<51663> PARTS,KIT,PUMP,FUEL..... <CURE DATE> U/O 2915-202-5827,FIG.81A											
				MS29513-12	...PACKING.....		EA		1							
				MS29513-131	...PACKING.....		EA		2							
				MS29513-136	...PACKING.....		EA		1							
				MS29513-8	...PACKING.....		EA		1							
				RA11229	...BUSHING.....		EA		1							
				RB11226	...GASKET.....		EA		1							
				RB12122-112	...PACKING.....		EA		1							
				800-515-8	...PACKING.....		EA		2							
					...NUT,HEXAGON.....											
P	H		2915-775-0591	350497A	<06848> PARTS KIT,CARBURETOR,CURE.... DATE U/O 2915-962-0077, FIG.214A		EA			*	REF	REF	REF			
				P10238	...PIN.....		EA		1							
				P15737	...SCREW.....		EA		4							
				P16630	...SCREW.....		EA		12							
				P22149	...PACKING.....		EA		1							
				P22151	...SCREEN.....		EA		1							
				P2885	...WASHER.....		EA		2							
				P3157	...WASHER.....		EA		2							
				P5439	...GASKET.....		EA		1							
				P60129	...NUT.....		EA		1							
				P60244	...NUT.....		EA		15							
				P60245	...PACKING.....		EA		2							
				P60303	...NUT.....		EA		22							
				P61250	...PLUNGER.....		EA		1							
				P6580	...GASKET.....		EA		4							
				P6855	...WASHER.....		EA		2							
				P70042	...WASHER.....		EA		3							
				P70064	...NUT.....		EA		1							
				P70144	...PACKING.....		EA		1							
				P70216	...GASKET.....		EA		2							
				P70227	...GASKET.....		EA		1							
				P70241	...NUT.....		EA		4							
				P70349	...GASKET.....		EA		1							
				P70401	...PACKING.....		EA		1							
				P70416	...GASKET.....		EA		1							
				P70495	...GASKET.....		EA		1							
				P70514	...PACKING.....		EA		1							
				P70565	...PIN.....		EA		9							
				P70593	...GASKET.....		EA		1							
				P70772	...GASKET.....		EA		1							
				P70796	...WASHER.....		EA		1							
				P70903	...SCREW.....		EA		2							
				P70941	...WASHER.....		EA		1							
				174S4	...GASKET.....		EA		1							
				315S3	...PACKING.....		EA		2							
				315S8	...PACKING.....		EA		2							
				328617	...SEAL.....		EA		3							

(1) SOURCE, MAINT AND REC CODE (a) SOURCE CODE	(b) MAINT LEVEL	(c) REC CODE	(2) FEDERAL STOCK NUMBER	(3) DESCRIPTION REFERENCE NUMBER		MODELS USABLE ON CH-34C	(4) UNIT OF ISSUE	(5) QTY INC IN UNIT PACK	(6) QTY INC IN UNIT	(7) 30-DAY DS/GS MAINT ALW (a) 1-20	(b) 21-50	(c) 51-100	(8) 1-YR ALW PER 100 EQUIP CNTGCY	(9) DEPOT MAINT ALW PER 100 EQUIP	(10) ILLUSTRATION (a) FIG NO	(b) ITEM NO
				360350	...RING		EA		1						KITS	
				360421	...GASKET		EA		2							
				361618	...WASHER		EA		6							
				363939	...PLUNGER		EA		1							
				364023	...PACKING		EA		1							
				364099	...NUT		EA		1							
				364394	...DIAPHRAGM ASSEMBLY		EA		1							
				364395	...DIAPHRAGM ASSEMBLY		EA		1							
				364400	...GASKET		EA		2							
				364401	...GASKET		EA		2							
				364454	...PACKING		EA		2							
				364491	...BUSHING		EA		1							
				364785	...PACKING		EA		1							
				364786	...PACKING		EA		1							
				364846	...PACKING		EA		1							
				364963	...GASKET		EA		1							
				365067	...GASKET		EA		1							
				365179	...PLATE		EA		1							
				365223	...GASKET		EA		2							
				365264	...WASHER		EA		2							
				365321	...WASHER		EA		1							
				365480	...WASHER		EA		1							
				365738	...PACKING		EA		2							
				366193	...VALVE ASSEMBLY		EA		1							
				366199	...PACKING		EA		1							
				366238	...GASKET		EA		1							
				368343	...PACKING		EA		2							
				392737	...WASHER		EA		1							
				392762	...INSULATOR		EA		1							
				392765	...WASHER		EA		1							
				392766	...SCREW		EA		1							
				392767	...INSULATION		EA		1							
				392964	...WASHER		EA		1							
				392992	...SPRING		EA		1							
				393360	...WASHER		EA		1							
				393625	...GASKET		EA		1							
				393629	...WASHER		EA		2							
				393675	...GASKET		EA		1							
				393728	...GASKET		EA		1							
				393788	...PACKING		EA		1							
				394256	...GASKET		EA		1							
				394274	...GASKET		EA		1							
				394354	...DIAPHRAGM		EA		1							
				394373	...PACKING		EA		2							
				394589	...DIAPHRAGM		EA		1							
				394944	...WASHER		EA		2							
				396134	...COVER		EA		1							
				396698	...RING		EA		1							
				396719	...DIAPHRAGM		EA		1							
				397967	...RING		EA		1							
				398353	...PACKING		EA		2							
				398535	...PACKING		EA		1							

(1) SOURCE, MAINT AND REC CODE (a) SOURCE CODE	(b) MAINT LEVEL	(c) REC CODE	(2) FEDERAL STOCK NUMBER	(3) DESCRIPTION REFERENCE NUMBER			MODELS USABLE ON CH-34C	(4) UN.T OF ISSUE	(5) QTY INC IN UNIT PACK	(6) QTY INC IN UNIT	(7) 30-DAY DS/GS MAINT ALW (a) 1-20	(b) 21-50	(c) 51-100	(8) 1-YR ALW PER 100 EQUIP CNTGCY	(9) DEPOT MAINT ALW PER 100 EQUIP	(10) ILLUSTRATION (a) FIG NO	(b) ITEM NO
				398629		...GASKET.....		EA		1						KITS	
				398879		...GASKET.....		EA		1							
				398976		...GASKET.....		EA		1							
				399177		...DIAPHRAGM.....		EA		1							
				399223		...WASHER.....		EA		1							
				399224		...WASHER.....		EA		1							
				399226		...BUSHING.....		EA		1							
				399232		...SPRING.....		EA		1							
				399998		...GASKET.....		EA		1							
				90145K12		...WASHER.....		EA		5							
				907666K1		...RING.....		EA		1							
P	O		2915-775-0606	350507A	<06848>	REPAIR KIT,CARBURETOR..... U/O 2915-962-0077,FIG.214A		EA			*	*	*				
				174S4		...GASKET.....		EA		1							
				315S8		...PACKING.....		EA		1							
				365320		...WASHER.....		EA		1							
				365321		...WASHER.....		EA		1							
				365480		...WASHER.....		EA		1							
P	H		2915-775-0610	6000	<87915>	PARTS KIT,CURE DATE..... U/O 2915-595-4875,FIG.175B		EA			*	*	REF				
				AN503-10-8		...SCREW.....		EA		4							
				AN503-8-10		...SCREW.....		EA		4							
				AN960-10		...WASHER.....		EA		8							
				1493		...SCREW.....		EA		4							
				2077		...GASKET.....		EA		1							
				2080		...GASKET.....		EA		1							
				3909		...SEAL.....		EA		1							
				8082		...SEAL ASSEMBLY.....		EA		1							
				8088A		...DIAPHRAGM ASSEMBLY.....		EA		1							
P	H		2915-775-0611	2000	<87915>	PARTS KIT,OVERHAUL-FUEL..... PUMP U/O 2915-595-4875, FIG.175B		EA			*	*	*				
				AN565C10-6		...SCREW.....		EA		1							
				AN913-1		...PLUG.....		EA		3							
						...PLASTIC BLOCK.....		EA		1							
				1343		...WASHER.....		EA		1							
				1779		...SPRING.....		EA		1							
				1783		...SPRING.....		EA		1							
				1931		...SHIPPING PLUG.....		EA		2							
				1937		...SHIPPING PLUG.....		EA		1							
				2076		...GASKET.....		EA		1							
				2089		...GASKET.....		EA		1							
				2541		...VALVE.....		EA		1							
				3040		...PIN.....		EA		1							
				3125		...SPRING.....		EA		1							
				3907-20		...SCREW.....		EA		1							
				3915		...RING.....		EA		1							
				3916		...NUT.....		EA		1							
				3931		...NUT.....		EA		1							
				3971		...BEARING.....		EA		2							
				3977		...DISK.....		EA		1							
				5036		...SHAFT.....		EA		1							

(1) SOURCE, MAINT AND REC CODE (a) SO-REC CODE	(b) MAINT LEVEL	(c) REC CODE	(2) FEDERAL STOCK NUMBER	(3) DESCRIPTION REFERENCE NUMBER			MODELS USABLE ON CH-34C	(4) UNIT OF ISSUE	(5) QTY INC IN UNIT PACK	(6) QTY INC IN UNIT	(7) 30-DAY DS/GS MAINT ALW (a) 1-20	(b) 21-50	(c) 51-100	(8) 1-YR ALW PER 100 EQUIP CNTGCY	(9) DEPOT MAINT ALW PER 100 EQUIP	(10) ILLUSTRATION (a) FIG NO	(b) ITEM NO
				5260		...ROTOR.....		EA		1						KITS	
				5365		...VANE.....		EA		4							
				5498		...COVER.....		EA		1							
				913A1D		...PLUG.....		EA		1							
P	F		2915-775-6528	350509A	<06848>	PARTS KIT,CARBURETOR..... U/O 2915-962-0077,FIG.214A											
				MS20365D1032A		...NUT.....		EA		1							
				MS20913-1		...PLUG.....		EA		2							
				MS9011-01		...DECAL.....		EA		1							
				P16179-64		...REDUCER.....		EA		1							
				P16630		...SCREW.....		EA		2							
				365179		...PLATE.....		EA		1							
				366193		...VALVE ASSEMBLY.....		EA		1							
				392762		...INSULATOR.....		EA		1							
				392765		...WASHER.....		EA		1							
				392766		...SCREW.....		EA		1							
				392767		...INSULATION.....		EA		1							
				392964		...WASHER.....		EA		1							
				392992		...SPRING.....		EA		1							
				393194		...WASHER.....		EA		1							
				393360		...WASHER.....		EA		1							
				396134		...COVER.....		EA		1							
				398629		...GASKET.....		EA		1							
P	H		2915-775-6536	48022	<11599>	REPAIR KIT,FUEL PUMP U/O.... 2915-486-1645,FIG.175					*	*	*				
				10		...WASHER.....		EA		8							
				10335		...SEAL.....		EA		1							
				14015		...DECAL.....		EA		1							
				2106		...FASTENER.....		EA		2							
				2677		...GASKET.....		EA		1							
				3193		...WASHER.....		EA		1							
				3252		...SPRING.....		EA		1							
				33		...SCREW.....		EA		4							
				3418		...PROTECTOR.....		EA		1							
				3438		...GASKET.....		EA		1							

(1) SOURCE, MAINT AND REC CODE (a) SOURCE CODE	(b) MAINT LEVEL	(c) REC CODE	(2) FEDERAL STOCK NUMBER	REFERENCE NUMBER	(3) DESCRIPTION	MODELS USABLE ON CH-34C	(4) UNIT OF ISSUE	(5) QTY INC IN UNIT PACK	(6) QTY INC IN UNIT	(7) 30-DAY DS/GS MAINT ALW (a) 1-20	(b) 21-50	(c) 51-100	(8) 1-YR ALW PER 100 EQUIP CNTGCY	(9) DEPOT MAINT ALW PER 100 EQUIP	(10) ILLUSTRATION (a) FIG NO	(b) ITEM NO
				3479	...SCREW.....		EA		4						KITS	
				3831	...GASKET.....		EA		1							
				3923	...DIAPHRAGM ASSEMBLY.....		EA		1							
				4624	...DIAPHRAGM ASSEMBLY.....		EA		1							
				9	...SCREW.....		EA		4							
P	H		2915-775-6537	48021 <11599>	REPAIR KIT,FUEL PUMP U/O.... 2915-486-1645,FIG.175		EA			*	*	*				
				AN535-00-2	...SCREW.....		EA		4							
				AN566C10-5	...SCREW.....		EA		1							
				AN931-1	...PLUG.....		EA		4							
				2618	...BEARING.....		EA		1							
				2620	...VANE.....		EA		4							
				2662	...PLUG.....		EA		1							
				3820	...NAMEPLATE.....		EA		1							
				3821	...TAG.....		EA		1							
				3867	...SPRING.....		EA		1							
				4198	...BEARING.....		EA		1							
				505	...SCREW.....		EA		1							
				508	...NUT.....		EA		1							
				5482	...COVER.....		EA		1							
				392992	...SPRING.....		EA		1							
				393194	...WASHER.....		EA		1							
				393360	...WASHER.....		EA		1							
					...GASKET.....											
P	F		2915-788-3351	350406A	REPAIR KIT,CARBURETOR U/O... 2915-962-0077,FIG.214A		EA			*	REF	REF				
				P22148	...NUT.....		EA		1							
				P22149	...PACKING.....		EA		1							
				P22151	...SCREW.....		EA		1							
				P60129	...NUT.....		EA		1							
				P61250	...PLUNGER.....		EA		1							
				328617	...SEAL.....		EA		1							
				360530	...RING.....		EA		1							
				392737	...WASHER.....		EA		1							
				399223	...WASHER.....		EA		1							
				399224	...WASHER.....		EA		1							
				399226	...BUSHING.....		EA		1							
				399232	...SPRING.....		EA		1							
P	H		2915-856-9722	350496B <06848>	PARTS KIT,CARBURETOR..... OVERHAUL RPLS-- 2915-775-0607 U/O 2915-962-0077,FIG.214A		EA			*	REF	REF	REF			
				P13618	...SCREW.....		EA		14							
				P14577-1	...PIN.....		EA		1							
				P15350	...WASHER.....		EA		26							
				P16708	...WASHER.....		EA		4							
				P17623	...PIN.....		EA		2							
				P18689	...PLUG.....		EA		1							
				P19064	...SPRING.....		EA		1							
				P19086-1	...PIN.....		EA		1							
				P19086-2	...PIN.....		EA		1							

(1) SOURCE, MAINT AND REC CODE (a) SOURCE CODE	(b) MAINT LEVEL	(c) REC CODE	(2) FEDERAL STOCK NUMBER	(3) DESCRIPTION REFERENCE NUMBER		MODELS USABLE ON CH-34C	(4) UNIT OF ISSUE	(5) QTY INC IN UNIT PACK	(6) QTY INC IN UNIT	(7) 30-DAY DS/GS MAINT ALW (a) 1-20	(b) 21-50	(c) 51-100	(8) 1-YR ALW PER 100 EQUIP CNTGCY	(9) DEPOT MAINT ALW PER 100 EQUIP	(10) ILLUSTRATION (a) FIG NO	(b) ITEM NO
				P19627-1	...PIN		EA		2						KITS	
				P19627-2	...PIN		EA		2							
				P19820	...WASHER		EA		3							
				P20109	...BUSHING		EA		7							
				P20164	...PLUG		EA		1							
				P20351	...NUT		EA		4							
				P21410	...PIN		EA		1							
				P21818	...SCREW		EA		4							
				P22198	...WASHER		EA		2							
				P22244-3400	...JET		EA		1							
				P2924	...SCREW		EA		1							
				P60110	...SCREW		EA		1							
				P60541	...WASHER		EA		1							
				P61195	...PLUG		EA		6							
				P6588	...SCREW		EA		3							
				P70007	...PLATE		EA		1							
				P70057	...SCREW		EA		2							
				P70065	...NUT		EA		1							
				P70087	...BOLT		EA		1							
				P70093	...WASHER		EA		1							
				P70223	...BOLT		EA		4							
				P70224	...SLEEVE		EA		2							
				P70225	...WASHER		EA		8							
				P70245	...WASHER		EA		2							
				P70264	...WASHER		EA		1							
				P70280	...GASKET		EA		1							
				P70287	...NUT		EA		2							
				P70478	...PLATE		EA		1							
				P70480	...PLATE		EA		1							
				P70491	...NUT		EA		1							
				P70525	...WASHER		EA		1							
				P70528	...SPRING		EA		1							
				P70563	...SCREW		EA		1							
				P70598	...SPRING		EA		1							
				P70629	...SCREW		EA		1							
				P70640	...SCREW		EA		2							
				P70648	...SPACER		EA		1							
				P70685	...BEARING		EA		2							
				P70728	...SCREW		EA		4							
				P70744	...BOLT		EA		5							
				P70781	...BRACE		EA		1							
				P70790	...SCREW		EA		4							
				P70795	...WASHER		EA		1							
				P70918	...SCREW		EA		2							
				P70937	...SPRING		EA		1							
				P8505	...PLUG		EA		2							
				P8508	...PLUG		EA		21							
				P9201-64	...BLEED		EA		1							
				P9201-67	...BLEED		EA		1							
				P9201-70	...BLEED		EA		2							
				117S2	...NUT		EA		1							
				187406	...DECAL		EA		2							

(1) SOURCE, MAINT AND REC CODE (a) SOURCE CODE	(b) MAINT LEVEL	(c) REC CODE	(2) FEDERAL STOCK NUMBER	(3) DESCRIPTION REFERENCE NUMBER		MODELS USABLE ON CH-34C	(4) UNIT OF ISSUE	(5) QTY INC IN UNIT PACK	(6) QTY INC IN UNIT	(7) 30-DAY DS/GS MAINT ALW (a) 1-20	(b) 21-50	(c) 51-100	(8) 1-YR ALW PER 100 EQUIP CNTGCY	(9) DEPOT MAINT ALW PER 100 EQUIP	(10) ILLUSTRATION (a) FIG NO	(b) ITEM NO
				333S642	...SCREW		EA		6						KITS	
				360186	...PLUG		EA		1							
				360420	...PLUG		EA		2							
				360694	...BRACE		EA		1							
				360884	...SPRING		EA		1							
				361465	...SPRING		EA		1							
				361609	...SCREW		EA		6							
				361619	...SCREW		EA		6							
				362406	...BUSHING		EA		5							
				363931	...NUT		EA		1							
				363942	...WASHER		EA		1							
				364026	...BUSHING		EA		1							
				364131	...PIN		EA		1							
				364132	...PIN		EA		1							
				364708	...STRAINER		EA		1							
				364746	...SCREW		EA		1							
				364794-56	...BLEED		EA		1							
				365178	...PLATE		EA		1							
				365180	...PLATE		EA		3							
				365261	...SPRING		EA		1							
				365320	...WASHER		EA		1							
				365396	...SPRING		EA		1							
				365513	...WASHER		EA		2							
				365611	...COVER		EA		1							
				365637	...WASHER		EA		1							
				365794	...RETAINER		EA		2							
				367019	...WASHER		EA		1							
				367020	...PLATE		EA		1							
				367480	...SPRING		EA		1							
				392502-51	...JET		EA		1							
				392502BLK	...JET		EA		1							
				392545	...BOLT		EA		7							
				392549	...SCREW		EA		6							
				392680	...BUSHING		EA		1							
				392684	...SCREW		EA		8							
				392705	...NUT		EA		1							
				392725	...NUT		EA		1							
				392726	...SCREW		EA		1							
				392782	...GASKET		EA		1							
				393037	...SPRING		EA		1							
				393194	...WASHER		EA		3							
				393297	...PLUG		EA		1							
				393348	...WASHER		EA		1							
				393349	...BUSHING		EA		1							
				393399	...PLUG		EA		4							
				393506	...GASKET		EA		1							
				393630	...SPRING		EA		2							
				393631	...WASHER		EA		2							
				393644	...PLUG		EA		1							
				393646	...PLUG		EA		1							
				393946	...SCREW		EA		1							
				394064	...PLATE		EA		1							

(1) SOURCE, MAINT AND REC CODE (a) SOURCE CODE	(b) MAINT LEVEL	(c) REC CODE	(2) FEDERAL STOCK NUMBER	(3) DESCRIPTION REFERENCE NUMBER			MODELS USABLE ON CH-34C	(4) UNIT OF ISSUE	(5) QTY INC IN UNIT PACK	(6) QTY INC IN UNIT	(7) 30-DAY DS/GS MAINT ALW (a) 1-20	(b) 21-50	(c) 51-100	(8) 1-YR ALW PER 100 EQUIP CNTGCY	(9) DEPOT MAINT ALW PER 100 EQUIP	(10) ILLUSTRATION (a) FIG NO	(b) ITEM NO
				394065		...PLATE.....		EA		1						KITS	
				394226		...SPRING.....		EA		2							
				394227		...WASHER.....		EA		2							
				394229		...NUT.....		EA		2							
				394291		...RING.....		EA		2							
				394627		...WASHER.....		EA		4							
				396369		...BUSHING.....		EA		1							
				396689		...BUSHING.....		EA		1							
				396702		...NUT.....		EA		1							
				396707		...BUSHING.....		EA		1							
				396716		...WASHER.....		EA		1							
				396746		...PIN.....		EA		1							
				397469		...PIN.....		EA		26							
				397560		...PIN.....		EA		2							
				397645		...SPRING.....		EA		1							
				398653		...PIN.....		EA		5							
				398929		...GASKET.....		EA		1							
				398945		...PIN.....		EA		1							
				399256		...NUT.....		EA		1							
				399257		...SPRING.....		EA		1							
				399983		...GASKET.....		EA		2							
				900846K1		...NUT.....		EA		1							
				900847K1		...NUT.....		EA		1							
				900848K1		...NUT.....		EA		1							
				900849K1		...NUT.....		EA		2							
				901004K12		...WASHER.....		EA		1							
				907236K1		...WASHER.....		EA		6							
				907237K1		...WASHER.....		EA		28							
				907239K1		...WASHER.....		EA		22							
P	H		2915-859-8589	RA22408	<51663>	PARTS KIT,FUEL PUMP CURE DATE U/O 2915-859-8472,FIG.79A		EA									
				AS90666		...BEARING.....		EA		2							
				AS92225		...PROTECTOR.....		EA		1							
				MS29512-2		...PACKING.....		EA		1							
				MS29513-10		...PACKING.....		EA		1							
				MS29513-12		...PACKING.....		EA		1							
				MS29513-131		...PACKING.....		EA		2							
				MS29513-139		...PACKING.....		EA		1							
				MS29513-18		...PACKING.....		EA		1							
				MS29513-8		...PACKING.....		EA		1							
				MS29513-9		...PACKING.....		EA		2							
				RA11229		...BUSHING.....		EA		1							
				RB11226		...GASKET.....		EA		1							
				RB12122-112		...PACKING.....		EA		1							
				800-515-8		...PACKING-W/RB8358-515-8.... RETAINER		EA		2							
P	H		2915-970-1779	RA22175	<51663>	PARTS KIT,PUMP,OVERHAUL.....		EA		1							
				AN500A6-3	<88044>	...SCREW.....		EA		2							
				AN500A8-6	<88044>	...SCREW.....		EA		3							
				AN505-4-4	<88044>	...SCREW.....		EA		2							
				AN515-6-5	<88044>	...SCREW.....		EA		2							
				AN814-DL	<88044>	...PLUG.....		EA		2							

(1) SOURCE, MAINT AND REC CODE (a) SOURCE CODE	(b) MAINT LEVEL	(c) REC CODE	(2) FEDERAL STOCK NUMBER	REFERENCE NUMBER	(3) DESCRIPTION	MODELS USABLE ON CH-34C	(4) UNIT OF ISSUE	(5) QTY INC IN UNIT PACK	(6) QTY INC IN UNIT	(7) 30-DAY DS/GS MAINT ALW (a) 1-20	(b) 21-50	(c) 51-100	(8) 1-YR ALW PER 100 EQUIP CNTGCY	(9) DEPOT MAINT ALW PER 100 EQUIP	(10) ILLUSTRATION (a) FIG NO	(b) ITEM NO
				AN960-4L <88044>	...WASHER.....		EA		1						KITS	
				AN960-8L <88044>	...WASHER.....		EA		3							
				AN960-10L <88044>	...WASHER.....		EA		1							
				AS80336	...TERMINAL.....		EA		1							
				AS80359 <90299>	...TERMINAL.....		EA		1							
				AS80683 <90299>	...BEARING,BALL.....		EA		1							
				MS20659-3 <96906>	...TERMINAL.....		EA		1							
				AS89546 <90299>	...SCREW.....		EA		2							
				AS89547 <90299>	...SPACER.....		EA		1							
				AS89549 <90299>	...WASHER.....		EA		1							
				AS89734 <90299>	...SPRING.....		EA		2							
				AS91321 <90299>	...TUBING.....		EA		1							
				AS92226 <90299>	...TUBING.....		EA		1							
				MS16625-1050 <96906>	...RING.....		EA		1							
				L1204 <81983>	...PLUG,BREATHER.....		EA		1							
				MS20364-1032C <96906>	...NUT.....		EA		1							
				MS20659-1 <96906>	...TERMINAL.....		EA		1							
				MS20659-3 <96906>	...TERMINAL.....		EA		1							
				MS20913-1 <96906>	...PLUG.....		EA									
				NAS818-4 <80205>	...PLUG,PROTECT.....		EA		1							
				NAS818-8 <51663>	...PLUG,PROTECT.....		EA		2							
				RA11071 <51663>	...WASHER.....		EA		1							
				RA11227 <51663>	...KEY.....		EA		1							
				RA11228-1 <51663>	...STRAINER.....		EA									
				RA11231 <51663>	...WASHER.....		EA		1							
				RA11234 <51663>	...SPRING.....		EA		1							
				RA11253 <51663>	...SHIM.....		EA		2							
				RA11253-1 <51663>	...SHIM.....		EA		2							
				RA11253-2 <51663>	...SHIM.....		EA		2							
				RA11253-3 <51663>	...SHIM.....		EA		1							
				RA11253-4 <51663>	...SHIM.....		EA		1							
				RA11253-5 <51663>	...SHIM.....		EA		1							
				RA11249 <51663>	...SHIM.....		EA		1							
				RA11249-1 <51663>	...SHIM.....		EA		1							
				RA11249-2 <51663>	...SHIM.....		EA		1							
				RA11249-3 <51663>	...SHIM.....		EA		1							
				RA11256 <51663>	...SEAL.....		EA		1							
				RA11257 <51663>	...SLINGER.....		EA		1							
				RB11235 <51663>	...STRAINER ASSEMBLY.....		EA		1							
				RB15259-3 <51663>	...PLUG,PROTECT.....		EA		2							
				RB8515-16-1-1-4 <51663>	...INSULATION.....		EA		2							
				US25071 <90299>	...WASHER.....		EA		1							
				US60848 <90299>	...SCREW.....		EA		2							
				US67892 <90299>	...WASHER.....		EA		4							
				US68096 <90299>	...PIN.....		EA		2							
				US76357 <90299>	...BRUSH.....		EA		2							
P	F		2925-605-5932	10-88517-5 <77820>	REPAIR KIT,MAGNETO U/O..... 2925-294-2596,FIG.212A		EA			*	REF	REF	REF			
				10-528Z	...SCREW.....		EA		7							
				10-7501	...WASHER.....		EA		3							
				10-79380	...BREAKER ASSEMBLY.....		EA		3							
				10-91464-4	...SCREW.....		EA		1							

(1) SOURCE, MAINT AND REC CODE (a) SOURCE CODE	(b) MAINT LEVEL	(c) REC CODE	(2) FEDERAL STOCK NUMBER	REFERENCE NUMBER	(3) DESCRIPTION	MODELS USABLE ON CH-34C	(4) UNIT OF ISSUE	(5) QTY INC IN UNIT PACK	(6) QTY INC IN UNIT	(7) 30-DAY DS GS MAINT ALW (a) 1-20	(b) 21-50	(c) 51-100	(8) 1-YR ALW PER 100 EQUIP CNTGCY	(9) DEPOT MAINT ALW PER 100 EQUIP	(10) ILLUSTRATION (a) FIG NO	(b) ITEM NO
				10-91464-5	...SCREW		EA		2						KITS	
				2-171Z	...WASHER		EA		7							
				2-194	...WASHER		EA		7							
P	H		2925-611-3910	10-88518-49 <77820>	KIT,MAJOR REPAIR,MAGNETO..... U/O 2925-294-2596,FIG.212A		EA			*	*	*				
				10-1125	...PLUG		EA		1							
				10-14942	...SCREW		EA		2							
				10-17702	...SCREW		EA		3							
				10-180003-1	...STRIP		EA		1							
				10-18183	...SCREW		EA		3							
				10-18184	...SCREW		EA		1							
				10-18264	...SCREW		EA		8							
				10-19399	...WASHER		EA		3							
				10-20688	...KEY		EA		3							
				10-20774	...WASHER		EA		4							
				10-22631	...NUT		EA		2							
				10-24115	...WASHER		EA		3							
				10-24812	...WASHER		EA		1							
				10-2501	...NUT		EA		2							
				10-33508-1	...SPACER		EA		1							
				10-33670	...TERMINAL		EA		5							
				10-34615	...WASHER		EA		2							
				10-3496	...WASHER		EA		1							
				10-3677	...WASHER		EA		12							
				10-37288-7S	...CONNECTOR		EA		1							
				10-37320-14S	...CONNECTOR		EA		1							
				10-3793	...WASHER		EA		1							
				10-38482	...TERMINAL		EA		1							
				10-38949	...SCREW		EA		4							
				10-40200	...SOCKET		EA		19							
				10-40450-14S	...CONNECTOR		EA		1							
				10-40450-22S	...GASKET		EA		1							
				10-50051	...CLAMP		EA		2							
				10-50078	...SLEEVE		EA		7							
				10-5130	...NUT		EA		1							
				10-52519	...WASHER		EA		8							
				10-52533	...SPRING		EA		3							
				10-52541	...SCREW		EA		8							
				10-52595	...BEARING		EA		1							
				10-54155	...SPRING		EA		1							
				10-54156	...RING		EA		1							
				10-54449	...CLAMP		EA		2							
				10-56933	...SLINGER		EA		2							
				10-56958	...SPRING		EA		1							
				10-59263	...GASKET		EA		1							
				10-59264	...PIN		EA		18							
				10-59282	...TERMINAL		EA		1							
				10-59293	...RIVET		EA		3							
				10-59297-1	...MARKER		EA		1							
				10-59297-2	...MARKER		EA		1							
				10-59297-3	...MARKER		EA		1							
				10-59299	...NUT		EA		3							

(1) SOURCE, MAINT AND REC CODE (a) SOURCE CODE	(b) MAINT LEVEL	(c) REC CODE	(2) FEDERAL STOCK NUMBER	REFERENCE NUMBER	(3) DESCRIPTION	MODELS USABLE ON CH-34C	(4) UNIT OF ISSUE	(5) QTY INC IN UNIT PACK	(6) QTY INC IN UNIT	(7) 30-DAY DS/GS MAINT ALW (a) 1-20	(b) 21-50	(c) 51-100	(8) 1-YR ALW PER 100 EQUIP CNTGCY	(9) DEPOT MAINT ALW PER 100 EQUIP	(10) ILLUSTRATION (a) FIG NO	(b) ITEM NO
				10-70701-23	...RING.....		EA		1						KITS	
				10-70702-23	...SPRING.....		EA		1							
				10-7501	...WASHER.....		EA		8							
				10-75515	...SCREW.....		EA		2							
				10-75791	...CONNECTOR.....		EA		1							
				10-75793	...CONNECTOR.....		EA		1							
				10-75794	...SCREW.....		EA		4							
				10-76724	...BUSHING.....		EA		1							
				10-77386	...WASHER.....		EA		3							
				10-78669	...INSULATOR.....		EA		3							
				10-78670	...BRUSH.....		EA		3							
				10-78671	...BRACKET.....		EA		2							
				10-78690	...LOCKNUT.....		EA		1							
				10-78691	...WASHER.....		EA		1							
				10-78695	...PLATE.....		EA		1							
				10-78698	...POINTER.....		EA		1							
				10-80622	...PIN.....		EA		1							
				10-80625	...PLATE.....		EA		1							
				10-80628	...PLATE.....		EA		1							
				10-80629	...CUP.....		EA		1							
				10-80630	...BRIDGE.....		EA		1							
				10-80636	...CARBON BRUSH.....		EA		1							
				10-81816	...BEARING.....		EA		1							
				10-81826	...BEARING.....		EA		1							
				10-81896	...BEARING.....		EA		1							
				10-82462	...TERMINAL.....		EA		1							
				10-82486	...WASHER.....		EA		1							
				10-85905	...LEAD.....		EA		1							
				10-85951	...SCREW.....		EA		1							
				10-85952-1	...WASHER.....		EA		1							
				10-85953	...WASHER.....		EA		1							
				10-90700-4	...WASHER.....		EA		4							
				10-90700-7	...WASHER.....		EA		4							
				10-90700-9	...WASHER.....		EA		1							
				10-90701-5	...WASHER.....		EA		28							
				10-90751-19	...PIN.....		EA		1							
				10-90751-9	...PIN.....		EA		1							
				10-91464-4	...SCREW.....		EA		2							
				10-91464-5	...SCREW.....		EA		1							
				10-91464-8	...SCREW.....		EA		3							
				10-91471-10	...SCREW.....		EA		4							
				10-91471-8	...SCREW.....		EA		8							
				10-91644-44	...SCREW.....		EA		4							
				10-91675-64	...SCREW.....		EA		5							
				10-948Z	...NUT.....		EA		1							
				10-9943	...WASHER.....		EA		3							
				2-194	...WASHER.....		EA		20							
				2-220	...WASHER.....		EA		4							
				2-339	...WASHER.....		EA		1							
P	H		2925-710-6155	644015 <99551>	PARTS KIT,STARTER-OVERHAUL... U/O 2925-141-9378, 2925-654-3206,FIG.175A		EA			*	*	*				

(1) SOURCE, MAINT AND REC CODE (a) SOURCE CODE	(b) MAINT LEVEL	(c) REC CODE	(2) FEDERAL STOCK NUMBER	(3) DESCRIPTION REFERENCE NUMBER		MODELS USABLE ON CH-34C	(4) UNIT OF ISSUE	(5) QTY INC IN UNIT PACK	(6) QTY INC IN UNIT	(7) 30-DAY DS/GS MAINT ALW (a) 1-20	(b) 21-50	(c) 51-100	(8) 1-YR ALW PER 100 EQUIP CNTGCY	(9) DEPOT MAINT ALW PER 100 EQUIP	(10) ILLUSTRATION (a) FIG NO	(b) ITEM NO
				AN3054-16	...NUT		EA		1						KITS	
				AN364-1032	...NUT		EA		4							
				AN380-2-1	...PIN		EA		1							
				AN381-2-10	...PIN		EA		2							
				AN500A8-12	...SCREW		EA		4							
				AN500A8-6	...SCREW		EA		4							
				AN501AC10-40	...SCREW		EA		5							
				AN505-6-5	...SCREW		EA		3							
				AN935-8	...WASHER		EA		4							
				AN935B10L	...WASHER		EA		1							
				AN935B616L	...WASHER		EA		2							
				AN935B8	...WASHER		EA		4							
				AN960-10L	...WASHER		EA		8							
				11558	...SCREW		EA		4							
				11826	...SCREW		EA		2							
				123194	...SPRING		EA		4							
				123684	...GROMMET		EA		2							
				123685	...WASHER		EA		1							
				126833	...SPRING		EA		12							
				126848	...SPACER		EA		1							
				126851	...BUSHING		EA		1							
				126856	...SCREW		EA		8							
				129802	...WASHER		EA		1							
				130299	...ROLLER		EA		90							
				131219	...SCREW		EA		2							
				131221	...STRAP		EA		2							
				131222	...PIN		EA		1							
				131223	...PIN		EA		1							
				131224	...LUG		EA		1							
				131266	...INSULATOR		EA		1							
				18357	...WASHER		EA		6							
				20501	...NUT		EA		2							
				20503-24	...PIN		EA		1							
				20504-45	...BEARING		EA		1							
				20504-50	...BEARING		EA		1							
				20506-7	...SCREW		EA		4							
				20506-82	...SCREW		EA		1							
				20521-2	...KEY		EA		1							
				21014	...SCREW		EA		4							
				25103	...WASHER		EA		4							
				45517	...PIN		EA		1							
				6087	...WASHER		EA		1							
				70510	...NUT		EA		1							
				80330	...CAP		EA		1							
				822710	...RACE		EA		3							
				823869	...BEARING		EA		4							
				824087	...RACE		EA		4							
				824168	...BUSHING		EA		1							
				832732-2	...SCREW		EA		1							
				834223	...SPACER		EA		20							
				834224	...SPACER		EA		20							
				835642	...SPRING		EA		1							

(1) SOURCE, MAINT AND REC CODE (a) SOURCE CODE	(b) MAINT LEVEL	(c) REC CODE	(2) FEDERAL STOCK NUMBER	REFERENCE NUMBER	(3) DESCRIPTION	MODELS USABLE ON CH-34C	(4) UNIT OF ISSUE	(5) QTY INC IN UNIT PACK	(6) QTY INC IN UNIT	(7) 30-DAY DS/GS MAINT ALW (a) 1-20	(b) 21-50	(c) 51-100	(8) 1-YR ALW PER 100 EQUIP CNTGCY	(9) DEPOT MAINT ALW PER 100 EQUIP	(10) ILLUSTRATION (a) FIG NO	(b) ITEM NO
				837769	...RETAINER		EA		1						KITS	
				837771	...COVER		EA		1							
				837922	...SPACER		EA		3							
				839234	...PACKING		EA		1							
				839241	...SPACER		EA		1							
				840810-2	...STUD		EA		4							
				840810-3	...STUD		EA		4							
				840810-4	...STUD		EA		4							
				841383	...CUP		EA		1							
				841385	...SPRING		EA		1							
				841447	...CUP		EA		2							
				842726	...SCREW		EA		3							
				842826	...BEARING		EA		1							
				843445	...RETAINER		EA		1							
				844187	...NUT		EA		1							
				854305	...BRUSH ASSEMBLY		EA		4							
				861075	...PLATE ASSEMBLY		EA		1							
				879792	...BEARING		EA		3							
				879805	...RING		EA		3							
				883986	...SPACER		EA		1							
				890121-3	...PACKING		EA		1							
				890392-9	...PIN		EA		4							
				89823	...INSULATOR		EA		1							
				92239	...LUG		EA		1							
				92587-137	...RING		EA		1							
P	F		2925-710-6157	644006 <99551>	PARTS KIT,STARTER,FIELD		EA			*	*	*				
					U/O 2925-141-9378,											
					2925-233-5644,											
					2925-373-8672,											
					2925-373-8688,&											
					2925-654-3206,FIG.175A											
				AN935B10L	...WASHER		EA		1							
				AN935B8	...WASHER		EA		4							
				131219	...SCREW		EA		2							
				131221	...STRAP		EA		2							
				131222	...PIN		EA		1							
				131223	...PIN		EA		1							
				20506-7	...SCREW		EA		4							
				20506-82	...SCREW		EA		1							
				854305	...BRUSH ASSEMBLY		EA		4							
P	H		2925-710-6158	644007 <99551>	PARTS KIT,STARTER OVERHAUL		EA			*	*	*				
					U/O 2925-233-5644,											
					2925-373-8672 &											
					2925-373-8688,FIG.175A											
				AN354-16	...NUT		EA		1							
				AN380-2-1	...PIN		EA		1							
				AN500A8-12	...SCREW		EA		4							
				AN501AC10-40	...SCREW		EA		5							
				AN505-6-5	...SCREW		EA		4							
				AN935-8	...WASHER		EA		4							
				AN935B10L	...WASHER		EA		1							
				AN935B616L	...WASHER		EA		2							

(1) SOURCE, MAINT AND REC CODE (a) SOURCE CODE	(b) MAINT LEVEL	(c) REC CODE	(2) FEDERAL STOCK NUMBER	(3) DESCRIPTION REFERENCE NUMBER		MODELS USABLE ON CH-34C	(4) UNIT OF ISSUE	(5) QTY INC IN UNIT PACK	(6) QTY INC IN UNIT	(7) 30-DAY DS/GS MAINT ALW (a) 1-20	(b) 21-50	(c) 51-100	(8) 1-YR ALW PER 100 EQUIP CNTGCY	(9) DEPOT MAINT ALW PER 100 EQUIP	(10) ILLUSTRATION (a) FIG NO	(b) ITEM NO
				AN935B8	...WASHER		EA		4						KITS	
				11558	...SCREW		EA		4							
				11826	...SCREW		EA		2							
				123194	...SPRING		EA		4							
				123684	...GROMMET		EA		2							
				123685	...WASHER		EA		1							
				126833	...SPRING		EA		12							
				126848	...SPACER		EA		1							
				126851	...BUSHING		EA		1							
				126856	...SCREW		EA		8							
				129802	...WASHER		EA		1							
				130299	...ROLLER		EA		90							
				131219	...SCREW		EA		2							
				131221	...STRAP		EA		2							
				131222	...PIN		EA		1							
				131223	...PIN		EA		1							
				131224	...LUG		EA		1							
				131266	...INSULATOR		EA		1							
				18357	...WASHER		EA		6							
				20501-53	...NUT		EA		2							
				20503	...PIN		EA		2							
				20504	...BEARING		EA		1							
				20506-7	...SCREW		EA		4							
				20506-82	...SCREW		EA		1							
				20521-2	...KEY		EA		1							
				21014	...SCREW		EA		4							
				25103	...WASHER		EA		4							
				45517-6	...PIN		EA		1							
				6087	...WASHER		EA		1							
				70510	...NUT		EA		1							
				80330	...CAP		EA		1							
				822710	...RACE		EA		3							
				823869	...BEARING		EA		4							
				824087	...RACE		EA		4							
				824168	...BUSHING		EA		1							
				832732-2	...SCREW		EA		1							
				834223	...SPACER		EA		20							
				834224	...SPACER		EA		20							
				835642	...SPRING		EA		1							
				837321	...PLATE ASSEMBLY		EA		1							
				837922	...SPACER		EA		3							
				839234	...PACKING		EA		1							
				839241	...SPACER		EA		1							
				841383	...CUP		EA		1							
				841385	...SPRING		EA		1							
				841447	...CUP		EA		2							
				842726	...SCREW		EA		3							
				842826	...BEARING		EA		1							
				843445	...RETAINER		EA		1							
				844187	...NUT		EA		1							
				854305	...BRUSH ASSEMBLY		EA		4							
				879792	...BEARING		EA		3							

(1) SOURCE, MAINT AND REC CODE (a) SOURCE CODE	(b) MAINT LEVEL	(c) REC CODE	(2) FEDERAL STOCK NUMBER	(3) DESCRIPTION REFERENCE NUMBER		MODELS USABLE ON CH-34C	(4) UNIT OF ISSUE	(5) QTY INC IN UNIT PACK	(6) QTY INC IN UNIT	(7) 30-DAY DS/GS MAINT ALW (a) 1-20	(b) 21-50	(c) 51-100	(8) 1-YR ALW PER 100 EQUIP CNTGCY	(9) DEPOT MAINT ALW PER 100 EQUIP	(10) ILLUSTRATION (a) FIG NO	(b) ITEM NO
				879805	...RING		EA		3						KITS	
				883986	...SPACER		EA		1							
				890121-3	...PACKING		EA		1							
				890392-9	...PIN		EA		4							
				89823	...INSULATOR		EA		1							
				92239	...LUG		EA		1							
				92587-137	...RING		EA		1							
P	H		2925-737-6476	52-200007 <31435>	PARTS KIT, STARTER ASSEMBLY... RPLS-- 2925-632-0562 U/O 2925-141-9746, 2925-180-3194,& 2925-708-5443,FIG.175		EA			*	*	*				
				AN325B6	...NUT		EA		1							
				AN355-4	...NUT		EA		1							
				AN365-1032C	...NUT		EA		8							
				AN365-832C	...NUT		EA		8							
				AN380-2-2	...PIN		EA		1							
				AN501A10-16	...SCREW		EA		4							
				AN501A8-14	...SCREW		EA		4							
				AN935-616	...WASHER		EA		2							
				AN960-10	...WASHER		EA		9							
				AN960-4	...WASHER		EA		1							
				AN960-416	...WASHER		EA		2							
				AN960-616	...WASHER		EA		1							
				AN960-8	...WASHER		EA		20							
				JH11907	...DOWEL		EA		1							
				JH11913	...WASHER		EA		1							
				JH11932	...WASHER		EA		1							
				JH119443	...SHIM		EA		1							
				JH11944-5	...SHIM		EA		1							
				JH11945	...RETAINER		EA		1							
				JH11951	...SPRING		EA		1							
				JH11952	...SPRING		EA		1							
				JH11968	...LUBRICATOR		EA		1							
				JH11969	...LUBRICATOR		EA		2							
				JH11973	...SPRING		EA		1							
				JH11974	...SPACER		EA		1							
				JH11975	...BOLT		EA		2							
				JH11983	...SPRING		EA		3							
				JH11984	...SPRING		EA		1							
				JH12506	...BRUSH ASSEMBLY		EA		4							
				JH12528	...STRAP		EA		1							
				JH12538	...COVER		EA		1							
				JH12545	...RETAINER ASSEMBLY		EA		1							
				JH12587	...WASHER		EA		1							
				JH12588	...INSULATOR		EA		1							
				JH12643	...BAND ASSEMBLY		EA		1							
				JH12653	...INSULATION		EA		1							
				JH12654	...WASHER		EA		1							
				JH12657	...SUPPORT		EA		1							
				JH13511-4	...BOLT		EA		6							
				JH200-1	...BEARING		EA		1							

(1) SOURCE, MAINT AND REC CODE (a) SOURCE CODE	(b) MAINT LEVEL	(c) REC CODE	(2) FEDERAL STOCK NUMBER	(3) DESCRIPTION REFERENCE NUMBER			MODELS USABLE ON CH-34C	(4) UNIT OF ISSUE	(5) QTY INC IN UNIT PACK	(6) QTY INC IN UNIT	(7) 30-DAY DS GS MAINT ALW (a) 1-20	(b) 21-50	(c) 51-100	(8) 1-YR ALW PER 100 EQUIP CNTGCY	(9) DEPOT MAINT ALW PER 100 EQUIP	(10) ILLUSTRATION (a) FIG NO	(b) ITEM NO
				JH200-5		...BEARING		EA		1						KITS	
				JH203-6		...BEARING		EA		2							
				JH204-18		...ROLLER		EA		90							
				JH365-22		...KEY		EA		2							
				MS9013-16		...RING		EA		1							
				MS9014-25		...RING		EA		1							
				05-321302		...NUT		EA		2							
				05-321306		...NUT		EA		2							
				05-340109		...SCREW		EA		4							
				05-340403		...SCREW		EA		1							
				05-340506		...SCREW		EA		2							
				05-340507		...SCREW		EA		2							
				05-346301		...SCREW		EA		8							
				05-349395		...SCREW		EA		1							
				05-360009		...STUD		EA		4							
				05-370019		...SPACER		EA		6							
				05-370061		...WASHER		EA		1							
				05-370092		...WASHER		EA		2							
				05-374022		...WASHER		EA		2							
				05-374036		...WASHER		EA		16							
				05-374040		...WASHER		EA		2							
				05-420503		...PIN		EA		1							
				05-425106		...RING		EA		1							
				05-425902		...RING		EA		1							
				05-425905		...RING		EA		1							
				05-620001		...SEAL		EA		1							
				05-620002		...SEAL		EA		1							
				05-631012		...SLEEVE		EA		8							
				05-700250		...NUT		EA		1							
				05-700315		...NUT		EA		6							
P	H		2925-776-1988	10-88518-52	<77820>	REPAIR KIT,LEAD ASSEMBLY.... U/O 2925-326-4535,FIG.213B		EA			*	*	*				
				AN501A10-12		...SCREW		EA		2							
				MS35338-5		...WASHER		EA		2							
				10-101196-14P		...CONNECTOR		EA		1							
				10-37289-14S		...CONNECTOR		EA		1							
				10-40822-14		...GROMMET		EA		2							
				738-16-10		...CLIP		EA		1							
P	H		2935-715-2290	594000-1	<79210>	PARTS KIT,VALVE REGULATOR.... U/O 2935-508-6096,FIG.74 & 75		EA			*	REF	REF				*
				AF356-428		...NUT		EA		6							
				AN302-16-8		...PIN		EA		1							
				AN310-4		...NUT		EA		2							
				AN380-2-2		...PIN		EA		1							
				AN380-2-3		...PIN		EA		1							
				AN4-17		...BOLT		EA		1							
				AN500A416-10		...SCREW		EA		3							
				AN500A6-6		...SCREW		EA		1							
				AN520-416-14		...SCREW		EA		2							
				AN535-00-2		...SCREW		EA		1							
				AN960-416L		...WASHER		EA		1							

(1) SOURCE, MAINT AND REC CODE (a) SOURCE CODE	(b) MAINT LEVEL	(c) REC CODE	(2) FEDERAL STOCK NUMBER	REFERENCE NUMBER	(3) DESCRIPTION	MODELS USABLE ON CH-34C	(4) UNIT OF ISSUE	(5) QTY INC IN UNIT PACK	(6) QTY INC IN UNIT	(7) 30-DAY DS/GS MAINT ALW (a) 1-20	(b) 21-50	(c) 51-100	(8) 1-YR ALW PER 100 EQUIP CNTGCY	(9) DEPOT MAINT ALW PER 100 EQUIP	(10) ILLUSTRATION (a) FIG NO	(b) ITEM NO
				AN960PD1016	...WASHER.....		EA		1						KITS	
				MS20470A2-8	...RIVET.....		EA		1							
				NAS1022N10	...NUT.....		EA		1							
				NAS50-131	...RING.....		EA		1							
				NAS50-150	...RING.....		EA		1							
				NAS50-162	...RING.....		EA		1							
				S8157A199-063	...WASHER.....		EA		1							
				S8239A11	...SHIPPING PLATE.....		EA		1							
				S8239A6	...SHIPPING PLATE.....		EA		2							
				S8267-20-108	...STUD.....		EA		8							
				19554	...GUIDE.....		EA		1							
				19555	...SPRING.....		EA		1							
				81425	...SPRING.....		EA		1							
				81426	...SPRING.....		EA		1							
				87158	...SPRING.....		EA		1							
				87159	...GUIDE.....		EA		1							
				87163	...COVER.....		EA		1							
				87164	...SPRING.....		EA		1							
				87239-1-159	...TUBE.....		EA		1							
P	H		2935-715-2291	594001-1 <70210>	PARTS KIT,VALVE,REGULATOR.... U/O 2935-332-6573,FIG.74 75		EA			*	REF	REF	REF			
				AN6227B12	...PACKING.....		EA		1							
				AN6227B22	...PACKING.....		EA		1							
				AN6230B4	...GASKET.....		EA		2							
				S8057E10	...PACKING.....		EA		1							
				S8057E12	...PACKING.....		EA		1							
				S8057E20	...PACKING.....		EA		1							
				S8057E25	...PACKING.....		EA		2							
				S8057E5	...PACKING.....		EA		2							
				S8239B11	...GASKET.....		EA		1							
				S8239B6	...GASKET.....		EA		2							
				2A4633-16	...GASKET.....		EA		1							
				5140-534016	...PACKING.....		EA		1							
				87029	...SEAL.....		EA		2							
P	H		2935-767-8069	594002-1 <70210>	REPAIR KIT,REGULATOR U/O.... P/N 83340,FIG.74 & 75		EA			*	REF	REF	REF			
				AN200KS3L	...BEARING.....		EA		1							
				AN23-16	...BOLT.....		EA		1							
				AN23-23	...BOLT.....		EA		1							
				AN3-3A	...BOLT.....		EA		4							
				AN320-3	...NUT.....		EA		2							
				AN320-5	...NUT.....		EA		12							
				AN340-416	...NUT.....		EA		1							
				AN380-2-2	...PIN.....		EA		9							
				AN380-2-3	...PIN.....		EA		2							
				AN392-19	...PIN.....		EA		1							
				AN392-23	...PIN.....		EA		1							
				AN392-35	...PIN.....		EA		1							
				AN393-11	...PIN.....		EA		6							
				AN515-6R7	...SCREW.....		EA		9							
				AN515-6R8	...SCREW.....		EA		4							

(1) SOURCE, MAINT AND REC CODE (a) SOURCE CODE	(b) MAINT LEVEL	(c) RECOV CODE	(2) FEDERAL STOCK NUMBER	(3) DESCRIPTION REFERENCE NUMBER			MODELS USABLE ON CH-34C	(4) UNIT OF ISSUE	(5) QTY INC IN UNIT PACK	(6) QTY INC IN UNIT	(7) 30-DAY DS/GS MAINT ALW (a) 1-20	(b) 21-50	(c) 51-100	(8) 1-YR ALW PER 100 EQUIP CNTGCY	(9) DEPOT MAINT ALW PER 100 EQUIP	(10) ILLUSTRATION (a) FIG NO	(b) ITEM NO
				AN960-10		...WASHER.....		EA		6						KITS	
				AN960-10L		...WASHER.....		EA		4							
				AN960-416L		...WASHER.....		EA		7							
				AN960-516		...WASHER.....		EA		3							
				AN960-516L		...WASHER.....		EA		3							
				AN960-6		...WASHER.....		EA		30							
				AN960PD10L		...WASHER.....		EA		28							
				AN960PD6		...WASHER.....		EA		2							
				BRA3		...BEARING.....		EA		1							
				MS20364-1032		...NUT.....		EA		4							
				MS20364-632		...NUT.....		EA		13							
				S8150D416-14		...SCREW.....		EA		4							
				S8150D416-56		...SCREW.....		EA		2							
				S8153-10-064C		...WASHER.....		EA		1							
				151626		...SCREW.....		EA		12							
				151627-1		...GUIDE.....		EA		1							
				151627-2		...GUIDE.....		EA		1							
				151634		...DOUBLER.....		EA		2							
				87643		...SPRING.....		EA		1							
				87644		...SPRING.....		EA		3							
				87911		...SPACER.....		EA		2							
				87911-1		...SPACER.....		EA		2							
P	H		2995-765-5527	RA22168	<51663>	PARTS KIT, PUMP-OVERHAUL..... U/O 2915-632-9181, FIG.76 & 2995-202-9084, FIG.76A		EA			*	*	*				
				AN535-00-2		...SCREW.....		EA		4							
				AN565B8H3		...SCREW.....		EA		1							
				AN565B8H8		...SCREW.....		EA		1							
				AN960-516		...WASHER.....		EA		4							
				MS20365-524		...NUT.....		EA		4							
				MS20913-1		...PLUG.....		EA		3							
				RA3485-1		...PLUG.....		EA		1							
				RA5237		...PLUG.....		EA		1							
				RA5299		...SEAT.....		EA		1							
				RA5381		...SPRING.....		EA		1							
				RA7608		...BEARING.....		EA		2							
				RA8933		...DISK.....		EA		1							
				RA9683		...SCREW.....		EA		1							
				RB15259-6		...PLUG.....		EA		2							
				RB7405-29		...CAP.....		EA		1							
				RB8357		...PLATE.....		EA		1							
P	H		2995-765-5528	RA22169	<51663>	REPAIR KIT <CURE DATE>..... U/O 2915-632-9181, FIG.76& 2995-202-9084, FIG.76A		EA			*	*	*				
				AN6227-10		...PACKING.....		EA		1							
				AN6227-13		...PACKING.....		EA		1							
				AN6227-27		...PACKING.....		EA		1							
				RB8358-515-8		...PACKING.....		EA		1							
P	H		2995-766-8662	RA22170	<51663>	REPAIR KIT, MOTOR..... U/O 2915-632-9181, FIG.76 2995-202-9084, FIG.76A		EA			*	*	*				
				AN310-3		...NUT.....		EA		2							

(1) SOURCE, MAINT AND REC CODE (a) SOURCE CODE	(b) MAINT LEVEL	(c) REC CODE	(2) FEDERAL STOCK NUMBER	(3) DESCRIPTION REFERENCE NUMBER			MODELS USABLE ON CH-34C	(4) UNIT OF ISSUE	(5) QTY INC IN UNIT PACK	(6) QTY INC IN UNIT	(7) 30 DAY DS/GS MAINT ALW (a) 1-20	(b) 21-50	(c) 51-100	(8) 1-YR ALWPER 100 EQUIP CNTGCY	(9) DEPOT MAINT ALWPER 100 EQUIP	(10) ILLUSTRATION (a) FIG NO	(b) ITEM NO
				AN500-4-4		...SCREW.....		EA		4						KITS	
				AN501A10-12		...SCREW.....		EA		4							
				AN535-0-3		...PIN.....		EA		4							
				AN913-1		...PLUG.....		EA		2							
				AN935-10		...LOCK WASHER.....		EA		2							
				AN936A4		...LOCK WASHER.....		EA		4							
				AN960-10L		...WASHER.....		EA		4							
				AN960-516L		...WASHER.....		EA		1							
				MS20365D1032		...NUT.....		EA		4							
				MS20365D428		...NUT.....		EA		1							
				1062495		...GASKET.....		EA		1							
				1063998		...STUD.....		EA		2							
				106497		...LOCK WASHER.....		EA		1							
				1066034		...U-BOLT.....		EA		2							
				1076423		...BRUSH ASSEMBLY.....		EA		4							
				431788		...KEY.....		EA		1							
				49681		...NUT.....		EA		1							
				5343464		...WASHER.....		EA		1							
				5343536		...BEARING.....		EA		1							
				5343971		...BRUSH CAP.....		EA		4							
				5344309		...THRU BOLT.....		EA		2							
				5360739		...CENTER PLUG.....		EA		1							
				5364856		...OIL THROWER.....		EA		1							
				5364857		...BEARING.....		EA		1							
				5364858		...GASKET.....		EA		1							
				5364859		...THRUST BEARING.....		EA		1							
				5364945		...WASHER.....		EA		1							
				5364946		...GASKET BEARING.....		EA		1							
				5365250		...WICK.....		EA		1							
				536869		...SCREW.....		EA		4							
				5378727		...BEARING.....		EA		1							
				5387073		...NAMEPLATE.....		EA		1							
				5389944		...GROUNDING TERMINAL.....		EA		1							
P	O		4440-476-1460	1338-91C	<07166>	CARTRIDGE AND DEW POINT..... INDICATOR KIT U/O 1680-476-1396,FIG.139		EA			REF	REF	REF				
				AN6290-8		...PACKING,PREFORMED.....		EA		1							
				1338-89A		...CARTRIDGE.....		EA		1							
				1364-109C8		...DEW POINT INDICATOR.....		EA		1							
P	H		4810-768-0375	640-1-16	<70236>	KIT PARTS,OVERHAUL VALVE..... U/O 1650-529-1169,FIG.33		EA			*	*	*				
				640-1-13		...SPRING,POPPET.....		EA		1							
				640-1-6		...SHIM,STOCK.....		EA		1							
				640-2-10		...POPPET.....		EA		2							
				640-2-11		...POPPET.....		EA		1							
				640-2-12		...POPPET.....		EA		1							
P	F		4810-769-1980	640-1-17	<70236>	REPAIR KIT,VALVE..... U/O 1650-529-1169,FIG.33		EA			*	*	REF				
				AN501A10-7		...SCREW.....		EA		8							
				AN6227-11		...PACKING,PREFORMED.....		EA		3							
			5330-198-6163	AN6227-14	<88044>	...PACKING,PREFORMED.....		EA		1							
				AN6227-5		...PACKING,PREFORMED.....		EA		2							

(1) SOURCE, MAINT AND REC CODE (a) SOURCE CODE	(b) MAINT LEVEL	(c) REC CODE	(2) FEDERAL STOCK NUMBER	REFERENCE NUMBER	(3) DESCRIPTION	MODELS USABLE ON CH-34C	(4) UNIT OF ISSUE	(5) QTY INC IN UNIT PACK	(6) QTY INC IN UNIT	(7) 30-DAY DS/GS MAINT ALW (a) 1-20	(b) 21-50	(c) 51-100	(8) 1-YR ALW PER 100 EQUIP CNTGCY	(9) DEPOT MAINT ALW PER 100 EQUIP	(10) ILLUSTRATION (a) FIG NO	(b) ITEM NO
				T1000	...FUNCTIONAL TEST.....		EA		1						KITS	
				6000-3-1	...ASSEMBLY INSTRUCTIONS.....		EA		1							
P	F		6110-614-1806	910C232-2 <79500>	REPAIR KIT,REGULATOR U/O.... 6110-337-8037,FIG.138A		EA			*	*	*				
				A1705070	...PACKAGE DISK.....		EA		1							
				P17D5083	...CONTACT.....		EA		1							
				P22D9902	...COVER.....		EA		1							
				AN501-4-2	...SCREW.....		EA		3							
				AN501-4-3	...SCREW.....		EA		2							
				AN501-4-6	...SCREW.....		EA		2							
				AN501A10-16	...SCREW.....		EA		3							
				AN507-832R5	...SCREW.....		EA		1							
				AN935-3	...LOCKWASHER.....		EA		2							
				AN935-4L	...SCREW.....		EA		4							
				AN935-6	...LOCKWASHER.....		EA		2							
				PS1101-7	...CONDENSOR.....		EA		2							
				PS1219-5	...BALL BEARING.....		EA		2							
				PS1264-2	...SWITCH.....		EA		1							
				W17379	...TIE BOLT.....		EA		2							
				W17387	...INSULATION.....		EA		1							
				W20136	...DRIVE SHAFT GEAR.....		EA		1							
				W20166-2	...WASHER.....		EA		1							
				XW20119	...CAM ASSEMBLY.....		EA		1							
				XW20128-1	...IDLE GEAR ASSEMBLY.....		EA		1							
				XW20128-2	...IDLE GEAR ASSEMBLY.....		EA		1							
				XW20128-3	...IDLE GEAR ASSY.....		EA		1							
				XW20442	...COVER AND NAMEPLATE ASSY..		EA		1							
P	H		6110-652-5275	1104008 <83298>	PARTS KIT,REGULATOR U/O..... 6110-651-8883,FIG.138C		EA			*	*	*				
				AN340-8	...NUT.....		EA		1							
				AN364-832C	...NUT.....		EA		2							
				AN500A6-3	...SCREW.....		EA		2							
				AN505-8-6	...SCREW.....		EA		2							
				AN935-4	...WASHER.....		EA		2							
				AN935-6	...WASHER.....		EA		1							
				AN935-8L	...WASHER.....		EA		1							
				WPJ1825-22	...WIRE.....		EA		1							
				0-330-1	...SCREW.....		EA		3							
				102976	...TUBE.....		EA		1							
				106083	...STUD.....		EA		3							
				107844	...LEAD ASSEMBLY.....		EA		1							
				1100905-1	...RESISTOR.....		EA		1							
				127794	...INSULATOR.....		EA		1							
				20500-51	...WASHER.....		EA		3							
				205001-47	...NUT.....		EA		3							
				20502-47	...SCREW.....		EA		3							
				20506-58	...SCREW.....		EA		2							
				20506-8	...SCREW.....		EA		1							
				22996-15	...SCREW.....		EA		2							
				33338	...WASHER.....		EA		1							
				59388	...NUT.....		EA		1							
				7142-114	...LEAD ASSEMBLY.....		EA		1							

(1) SOURCE, MAINT AND REC CODE (a) SOURCE CODE	(b) MAINT LEVEL	(c) REC CODE	(2) FEDERAL STOCK NUMBER	(3) DESCRIPTION REFERENCE NUMBER			MODELS USABLE ON CH-34C	(4) UNIT OF ISSUE	(5) QTY INC IN UNIT PACK	(6) QTY INC IN UNIT	(7) 30-DAY DS/GS MAINT ALW (a) 1-20	(b) 21-50	(c) 51-100	(8) 1-YR ALW PER 100 EQUIP CNTGCY	(9) DEPOT MAINT ALW PER 100 EQUIP	(10) ILLUSTRATION (a) FIG NO	(b) ITEM NO
				77473		...WASHER.....		EA		1						KITS	
				817845		...KIT <CARBON FILE PLUGS>...		EA		1							
				819128-188		...SCREW.....		EA		1							
				823335		...CLIP.....		EA		2							
				826298		...SPRING.....		EA		1							
				853026		...LEAD ASSEMBLY.....		EA		1							
				879951		...SPACER.....		EA		1							
				889267		...INSERT.....		EA		1							
				890105-4		...WASHER.....		EA		2							
				95908		...WASHER.....		EA		1							
				96594		...SHIM.....		EA		1							
				96609		...WASHER.....		EA		2							
				96621		...BUSHING.....		EA		2							
				96623		...WASHER.....		EA		3							
P	H		6110-765-8740	1104060	<83298>	KIT,REPAIR VOLTAGE REGULATOR. <OVERHAUL> U/O 6110-256-3150,FIG.138 & 139		EA			*	*	*				
				AN340-8		...NUT.....		EA		1							
				AN364-832C		...NUT.....		EA		2							
				AN500-4-7		...SCREW.....		EA		2							
				AN500-6-6		...SCREW.....		EA		1							
				AN500-6-8		...SCREW.....		EA		2							
				AN500A6-3		...SCREW.....		EA		2							
				AN505-8-6		...SCREW.....		EA		2							
				AN935-4		...WASHER.....		EA		2							
				AN935-6		...WASHER.....		EA		6							
				AN935-8L		...WASHER.....		EA		1							
				102976		...TUBE.....		EA		1							
				106083		...STUD.....		EA		3							
				107844		...LEAD ASSEMBLY.....		EA		1							
				125115		...SPRING.....		EA		1							
				125116		...PLATE.....		EA		1							
				125145		...SCREW,ADJUSTING.....		EA		1							
				126090		...LEAD.....		EA		1							
				126165		...COVER.....		EA		1							
				126739		...WASHER.....		EA		1							
				126743		...WASHER.....		EA		3							
				126744		...BUSHING.....		EA		3							
				127794		...INSULATOR.....		EA		1							
				127795		...BRACKET.....		EA		1							
				20500-18		...LOCKWASHER.....		EA		1							
				20500-49		...LOCKWASHER.....		EA		3							
				20501-56		...NUT.....		EA		1							
				20506-104		...SCREW.....		EA		3							
				20506-142		...SCREW.....		EA		1							
				20506-62		...SCREW.....		EA		2							
				20507-87		...SCREW.....		EA		1							
				22996-15		...SCREW.....		EA		2							
				23001-368		...SLEEVING.....		EA		1							
				23001-380		...SLEEVING.....		EA		2							
				33338		...WASHER.....		EA		8							
				59388		...NUT.....		EA		3							

(1) SOURCE, MAINT AND REC CODE (a) SOURCE CODE	(b) MAINT LEVEL	(c) REC CODE	(2) FEDERAL STOCK NUMBER	REFERENCE NUMBER	(3) DESCRIPTION	MODELS USABLE ON CH-34C	(4) UNIT OF ISSUE	(5) QTY INC IN UNIT PACK	(6) QTY INC IN UNIT	(7) 30-DAY DS GS MAINT ALW (a) 1-20	(b) 21-50	(c) 51-100	(8) 1-YR ALW PER 100 EQUIP CNTGCY	(9) DEPOT MAINT ALW PER 100 EQUIP	(10) ILLUSTRATION (a) FIG NO	(b) ITEM NO
				77473	...WASHER.....		EA		1						KITS	
				823335	...CLIP.....		EA		2							
				826298	...SPRING.....		EA		1							
				832657-3	...FERRULE ASSEMBLY.....		EA		1							
				833624	...RING.....		EA		1							
				834716	...RESISTOR AND LEAD ASSEMBLY		EA		1							
				837438	...RESISTOR.....		EA		1							
				852255	...KIT <CARBON PILE AND..... PLUG>		EA		1							
				879951	...SPACER.....		EA		1							
				890105-4	...WASHER.....		EA		2							
				92517-73	...LEAD.....		EA		3							
				95245	...WASHER.....		EA		3							
				95908	...WASHER.....		EA		2							
				96594	...SHIM.....		EA		1							
				96609	...WASHER.....		EA		2							
				96621	...BUSHING.....		EA		2							
				96623	...WASHER.....		EA		2							
P	H		6110-772-7855	910C232-1 <79500>	KIT,VOLTAGE REGULATOR U/O... 6110-337-8037,FIG.138A		EA			*	*	*				
				AN340-4	...NUT.....		EA		2							
				AN340-8	...NUT.....		EA		1							
				AN345-4	...NUT.....		EA		1							
				AN505-4-6	...SCREW.....		EA		2							
				AN510-4-26	...SCREW.....		EA		1							
				AN935-2	...WASHER.....		EA		3							
				AN960-4	...WASHER.....		EA		8							
				AN960-6	...WASHER.....		EA		2							
				AN960-8	...WASHER.....		EA		4							
				A17D5070	...PACKAGE DISK.....		EA		1							
				A19C7162	...CONTACT.....		EA		1							
				MS122026	...WASHER.....		EA		14							
				MS122028	...WASHER.....		EA		2							
				MS122029	...WASHER.....		EA		7							
				P11D334	...WASHER.....		EA		2							
				P11D7722	...INSULATOR.....		EA		2							
				P15D7667	...WASHER.....		EA		3							
				P17D5083	...CONTACT.....		EA		1							
				P17D5576	...SPRING.....		EA		1							
				P18D3049	...INSULATOR.....		EA		4							
				P18D3051-1	...TERMINAL.....		EA		1							
				P18D3065	...INSULATOR.....		EA		1							
				P18D3697-2	...RESISTOR.....		EA		1							
				P18D3944	...WASHER.....		EA		3							
				P21D4849	...RESISTOR.....		EA		1							
				P22D9452	...BUSHING.....		EA		2							
				P22D9902	...COVER.....		EA		1							
				P22D9904	...SETSCREW.....		EA		1							
				P28B8600-3	...SCREW.....		EA		1							
				P28B8800-6	...SCREW.....		EA		4							
				P28B8801-3	...SCREW.....		EA		2							
				P28B8802-20	...SCREW.....		EA		3							

(1) SOURCE, MAINT AND REC CODE (a) SOURCE CODE	(b) MAINT LEVEL	(c) REC CODE	(2) FEDERAL STOCK NUMBER	(3) DESCRIPTION REFERENCE NUMBER			MODELS USABLE ON CH-34C	(4) UNIT OF ISSUE	(5) QTY INC IN UNIT PACK	(6) QTY INC IN UNIT	(7) 30-DAY DS/GS MAINT ALW (a) 1-20	(b) 21-50	(c) 51-100	(8) 1-YR ALW PER 100 EQUIP CNTGCY	(9) DEPOT MAINT ALW PER 100 EQUIP	(10) ILLUSTRATION (a) FIG NO	(b) ITEM NO
				P2888802-22		...SCREW.....		EA		1						KITS	
				P2888802-4		...SCREW.....		EA		1							
				P2888802-7		...SCREW.....		EA		2							
				P2888805-10		...SCREW.....		EA		3							
				P8C5526		...BRACKET.....		EA		1							
				P8C6842-10		...SLEEVING.....		EA		2							
				P9D5655		...SPACER.....		EA		4							
P	H		6110-775-3923	52-510008	<31435>	REPAIR KIT,VOLTAGE..... REGULATOR U/D 6110-327-9825,FIG.139A		EA			*	*	*				
				AN365-632C		...NUT.....		EA		2							
				AN365D440C		...NUT.....		EA		2							
				AN500A4-6		...SCREW.....		EA		6							
				AN500A6-3		...SCREW.....		EA		2							
				AN500A6-4		...SCREW.....		EA		2							
				AN500A6-7		...SCREW.....		EA		3							
				AN505-4-6		...SCREW.....		EA		2							
				AN505C2-3		...SCREW.....		EA		3							
				AN515-6-40		...SCREW.....		EA		1							
				AN935-4L		...WASHER.....		EA		6							
				AN935-6L		...WASHER.....		EA		9							
				AN960-4		...WASHER.....		EA		4							
				AN960-6		...WASHER.....		EA		7							
				GR28-121		...BRACKET.....		EA		1							
				GR28-126		...PLUG.....		EA		2							
				GR28-128		...RHEOSTAT.....		EA		1							
				GR28-129		...DISC.....		EA		1							
				GR28-142		...RESISTOR.....		EA		1							
				GR28-143		...CLAMP.....		EA		1							
				GR28-145		...GROMMET.....		EA		1							
				GR28-148		...SCREW.....		EA		3							
				GR28-163		...SEAL.....		EA		1							
				GR28-24		...STACK ASSEMBLY.....		EA		1							
				GR28-27		...INSULATOR ASSEMBLY.....		EA		1							
				GR28-31		...CONTACT.....		EA		1							
				05-370043		...WASHER.....		EA		3							
				05-374065		...WASHER.....		EA		4							
				05-505918		...RESISTOR.....		EA		1							
				05631002		...INSULATION.....		EA		4							
P	F		6110-775-7480	52-510009	<31435>	REPAIR KIT,VOLTAGE..... REGULATOR U/D 6110-327-9825,FIG.139A		EA			*	*	2				
				GR28-163		...CONTACT SPRING ASSEMBLY...		EA		1							
				GR28-24		...CARBON STACK ASSEMBLY.....		EA		1							
				GR28-31		...CONTACT SPRING ASSEMBLY...		EA		1							
P	H		6110-784-4008	1104007	<83298>	REPAIR KIT,VOLTAGE..... REGULATOR U/D 6110-390-8104, 6110-635-9636,& 6110-733-6003,FIG.138C		EA			*	*	*				
				AN340-8		...NUT.....		EA		1							
				AN364-832C		...NUT.....		EA		3							

(1) SOURCE, MAINT AND REC CODE (a) SOURCE CODE	(b) MAINT LEVEL	(c) REC CODE	(2) FEDERAL STOCK NUMBER	REFERENCE NUMBER	(3) DESCRIPTION	MODELS USABLE ON CH-34C	(4) UNIT OF ISSUE	(5) QTY INC IN UNIT PACK	(6) QTY INC IN UNIT	(7) 30-DAY DS GS MAINT ALW (a) 1-20	(b) 21-50	(c) 51-100	(8) 1-YR ALW PER 100 EQUIP CNTGCY	(9) DEPOT MAINT ALW PER 100 EQUIP	(10) ILLUSTRATION (a) FIG NO	(b) ITEM NO
				AN500AG3	...SCREW		EA		2						KITS	
				AN505-8-6	...SCREW		EA		2							
				AN935-4	...WASHER		EA		2							
				AN935-6	...WASHER		EA		2							
				AN935-8L	...WASHER		EA		1							
				WPJ1825-22	...WIRE		EA		1							
				0-330-1	...SCREW		EA		2							
				102976	...TUBE		EA		1							
				10540	...WASHER		EA		1							
				106083	...STUD		EA		3							
				107844	...LEAD ASSEMBLY		EA		1							
				126165	...COVER		EA		1							
				126739	...PLATE		EA		1							
				126743	...WASHER		EA		3							
				126744	...BUSHING		EA		3							
				127794	...INSULATOR		EA		1							
				20501-47	...NUT		EA		3							
				20506-104	...SCREW		EA		3							
				20506-58	...SCREW		EA		2							
				20506-8	...SCREW		EA		2							
				20507-87	...SCREW		EA		1							
				22996-15	...SCREW		EA		2							
				25151-13-4	...WASHER		EA		4							
				33338	...WASHER		EA		2							
				59388	...NUT		EA		2							
				77473	...WASHER		EA		1							
				823335	...LOCK		EA		2							
				826298	...SPRING		EA		1							
				832657-3	...FERRULE ASSEMBLY		EA		1							
				843721	...WASHER		EA		2							
				849661	...RESISTOR ASSEMBLY		EA		1							
				850987	...RESISTOR		EA		2							
				853026	...LEAD ASSEMBLY		EA		1							
				853302	...KIT <CARBON FILE PLUGS>		EA		1							
				879951	...SPACER		EA		1							
				95245	...WASHER		EA		3							
				95808	...WASHER		EA		1							
				96594	...SHIM		EA		1							
				96609	...WASHER		EA		2							
				96621	...BUSHING		EA		2							
				96623	...WASHER		EA		2							
P	H		6115-627-6805	1104017-1 <83298>	KIT,PARTS,GENERATOR ASSEMBLY RPLS-- 6115-627-6805 U/O 2920-037-8987, 6115-643-4937,FIG.11		EA			*	REF	REF				
				AN3H3A	...BOLT		EA		2							
				AN500A8	...SCREW		EA		6							
				AN501-10-16	...SCREW		EA		4							
				AN501A10-10	...SCREW		EA		5							
				AN502-10-10	...SCREW		EA		8							
				AN502-10-12	...SCREW		EA		3							

(1) SOURCE, MAINT AND REC CODE (a) SOURCE CODE	(b) MAINT LEVEL	(c) REC CODE	(2) FEDERAL STOCK NUMBER	REFERENCE NUMBER	(3) DESCRIPTION	MODELS USABLE ON CH-34C	(4) UNIT OF ISSUE	(5) QTY INC IN UNIT PACK	(6) QTY INC IN UNIT	(7) 30-DAY DS/GS MAINT ALW (a) 1-20	(b) 21 50	(c) 51-100	(8) 1-YR ALW PER 100 EQUIP CNTGCY	(9) DEPOT MAINT ALW PER 100 EQUIP	(10) ILLUSTRATION (a) FIG NO	(b) ITEM NO
				AN503-10-6	...SCREW.....		EA		2						KITS	
				AN503-8-10	...SCREW.....		EA		2							
				AN503-8-6	...SCREW.....		EA		20							
				AN510-10-7	...SCREW.....		EA		5							
				AN6-6A	...BOLT.....		EA		2							
				AN935-616	...WASHER.....		EA		2							
				AN935-8	...WASHER.....		EA		8							
				MS20364-1032C	...NUT.....		EA		4							
				MS20364-624A	...NUT.....		EA		1							
				MS21044N08	...WASHER.....		EA		2							
				MS35337-43	...WASHER.....		EA		19							
				101330	...TERMINAL.....		EA		1							
				10540	...WASHER.....		EA		2							
				1105650	...SPRING.....		EA		1							
				110722	...RING.....		EA		1							
				1112266	...PLATE.....		EA		1							
				114859	...LOCK.....		EA		1							
				130415	...NUT.....		EA		1							
				15153	...WASHER.....		EA		4							
				19128	...WASHER.....		EA		18							
				22996-1	...SCREW.....		EA		4							
				29274	...WASHER.....		EA		2							
				819356-1	...CAP,LUG.....		EA		1							
				844453	...WASHER.....		EA		1							
				845615	...SLINGER.....		EA		3							
				847799	...SPRING.....		EA		8							
				847800	...PIN.....		EA		4							
				848049	...JUMPER ASSEMBLY.....		EA		2							
				848979	...PIN.....		EA		4							
				853774	...RETAINER.....		EA		1							
				854829	...TERMINAL.....		EA		1							
				854832	...TERMINAL.....		EA		2							
				854838	...TERMINAL.....		EA		1							
				854841	...TERMINAL.....		EA		1							
				854842	...COVER.....		EA		1							
				854852	...SPACER.....		EA		4							
				855960	...STRAP.....		EA		2							
				857206	...TERMINAL.....		EA		1							
				858902	...CLAMP.....		EA		1							
				861925	...BRUSH KIT.....		EA		1							
				890112-18	...BEARING.....		EA		2							
				890376-1	...SCREW.....		EA		2							
				92650-19	...TERMINAL.....		EA		2							
				92650-9	...TERMINAL.....		EA		1							
P	H		6685-676-2617	SP6010 <61349>	KIT,PARTS-OVERHAUL USE..... UNTIL EXHAUSTED NO REPLACEMENT		EA			*	*	*				
				AB890	...SLEEVING.....		EA		1							
				AB910	...RETAINER.....		EA		1							
				AB917	...NUT.....		EA		6							
				AB920	...WASHER-SPRING.....		EA		1							
				AB924	...INSULATOR.....		EA		1							

(1) SOURCE, MAINT AND REC CODE (a) SOURCE CODE	(b) MAINT LEVEL	(c) REC CODE	(2) FEDERAL STOCK NUMBER	(3) DESCRIPTION REFERENCE NUMBER		MODELS USABLE ON CH-34C	(4) UNIT OF ISSUE	(5) QTY INC IN UNIT PACK	(6) QTY INC IN UNIT	(7) 30-DAY DS/GS MAINT ALW (a) 1-20	(b) 21-50	(c) 51-100	(8) 1-YR ALW PER 100 EQUIP CNTGCY	(9) DEPOT MAINT ALW PER 100 EQUIP	(10) ILLUSTRATION (a) FIG NO	(b) ITEM NO
				AB930	...WASHER		EA		1						KITS	
				AB933A	...CLAMP-PLATE ASSEMBLY		EA		1							
				AB939	...INSULATOR		EA		1							
				AB946A	...COVER ASSEMBLY		EA		1							
				AB970	...SCREW		EA		3							
				AE312EK	...LINK		EA		1							
				AE719	...PINION		EA		1							
				AH13A	...PIN		EA		2							
				AH155AB	...SCREW		EA		1							
				AH1834AC	...RING		EA		1							
				AH1878AH	...WASHER		EA		3							
				AH1941Y	...TUBE		EA		1							
				AH2025JF	...GASKET		EA		1							
				AH2025JK	...GASKET		EA		1							
				AH2461BI	...DISK		EA		1							
				AH2745AO	...CONNECTION		EA		1							
				AH277P	...SCREW		EA		2							
				AH2835AE	...SCREW		EA		1							
				AH2835AG	...SCREW		EA		1							
				AH3217	...SCREW		EA		2							
				AH3217J	...SCREW		EA		1							
				AH4071	...CAP		EA		1							
				AH4077	...RING		EA		1							
				AH4078	...CLAMP		EA		1							
				AH4083	...BALL		EA		24							
				AH4084	...BEARING		EA		1							
				AH4085	...ARM-LEVER		EA		1							
				AH4086	...PLATE		EA		1							
				AH4090	...SCREW		EA		1							
				AH4097	...STRIP		EA		1							
				AH4098	...COVER		EA		1							
				AH41AH	...STOP		EA		1							
				AH4225	...SCREW		EA		1							
				AH483AH	...LOCKSCREW		EA		1							
				AH483H	...STOPSCREW		EA		3							
				AH483J	...LOCKSCREW		EA		3							
				AH500A	...WASHER		EA		3							
				AH500K	...WASHER		EA		3							
				AH501BX	...NUT		EA		2							
				AH501CR	...NUT		EA		2							
				AH940BE	...SCREW		EA		2							
				AH98DA	...SCREW, LEVER LOCKING		EA		1							
				AH98DB	...SCREW		EA		2							
				ANN1283	...HAIRSPRING		EA		1							
				ANN1284	...SYNCHRO CLAMP ASSEMBLY		EA		3							
				ANN1286	...PLATE		EA		1							
				ANN1288	...ADJUSTING ARM ASSEMBLY		EA		1							
				ANN1327A	...NEEDLE ASSEMBLY		EA		1							
				AN501B3-4	...SCREW		EA		3							
				AN501B6-5	...SCREW		EA		1							
				AN502B3-3	...SCREW		EA		3							
				MS28775-011	...NUT		EA		2							

1197

SECTION II

FUNCTIONAL GROUP 60

BULK MATERIALS

1197

(1) SOURCE, MAINT AND REC CODE (a) SOURCE CODE	(b) MAINT LEVEL	(c) REC CODE	(2) FEDERAL STOCK NUMBER	REFERENCE NUMBER		(3) DESCRIPTION	MODELS USABLE ON CH-34C	(4) UNIT OF ISSUE	(5) QTY INC IN UNIT PACK	(6) QTY INC IN UNIT	(7) 30-DAY DS GS MAINT ALW (a) 1-20	(b) 21-50	(c) 51-100	(8) 1-YR ALW PER 100 EQUIP CNTGCY	(9) DEPOT MAINT ALW PER 100 EQUIP	(10) ILLUSTRATION (a) FIG NO	(b) ITEM NO
			2810-118-8718	66376	<66640>	RING-ACCESSORY DRIVE AND..... STARTER SHAFT		EA			*	*	*		*	BULK	
			2810-306-5768	115458	<66640>	SPACER,SLEEVE-ALUMINUM ALLOY. 0.901 IN.ID,1.372 IN.OD, 0.982 IN.LG		EA			*	*	*		*		
			2925-440-1769	10-52617	<77820>	ADAPTER,SPRING RETAINING.....		EA			*	*	*		*		
			3110-120-3089	B183	<60380>	BEARING,ROLLER,NEEDLE-1-1/3.. IN.SHAFT DIA,1-3/8 IN.OD, AFBMA NEEDLE BEARING TOLERANCES,MIL-STD-102A		EA							*		
			3110-144-8840	20-7609	<75511>	BEARING,BALL,ANNULAR-SINGLE.. ROW,8 MM BORE DIA,22 MM OD, 7 MM O/A W		EA			*	*	*		*		
			3110-186-0961	A2025R2-15	<53553>	WASHER,KEY-STEEL,1 KEY..... INTERNAL,0.601 IN.ID,0.828 IN.OD,0.042 IN.THK		AV							*		
			3110-293-8267		<81349>	BEARING,BALL,ANNULAR-GROUND.. SINGLE ROW,RADIAL, SELF-CONTAINED,BOTH RINGS FLUSH,RETAINER TYPE,8 MM BORE DIA,22 MM OD,7 MM O/A W,MIL-G-3278		EA			*	*	*		*		
			3120-517-8417	NAS75-6-008	<80205>	BUSHING,SLEEVE-STEEL,..... 0.375 IN.ID,0.501 IN.OD, 1/4 IN.LG		AV			*	*	*		*		
			3120-528-6604	NAS537-6-50	<80205>	BUSHING,SLEEVE-STEEL,0.359... IN.ID,0.501 IN.OD,0.500 IN. LG		EA			*	*	*		*		
			3120-528-6605	NAS537-4-53	<80205>	BUSHING,SLEEVE-STEEL,0.2380.. IN.ID,0.3761 IN.OD, 0.530 IN.LG		EA							*		
			3120-662-9211	NAS76A4-119	<80205>	BEARING,SLEEV-ALUMINUM..... BRONZE,0.250 IN.ID,0.376 IN.OD,1.593 IN.LG		EA			*	*	*		*		
			3439-163-4363		<81349>	ROD,WELDING-STEEL,3/16 IN.... DIA,36 IN.LG,MIL-R-5632, CLASS 1		LB			*	*	*		*		
			3439-178-8590		<81348>	ROD,WELDING-ALUMINUN ALLOY,.. 1/16 IN.DIA,36 IN.LG, FED QQ-R-566		LB			*	*	*		*		
			3439-245-0234		<81349>	ROD,WELDING-NICKEL ALLOY..... 0.062 IN.DIA,36 IN.LG,FOR GAS WELDING,MIL-R-5031A		LB			*	*	*		*		
			3439-268-9654		<81348>	ROD,WELDING-ALUMINUM ALLOY,.. 0.093 IN.DIA,36 IN.LG,FOR GAS WELDING & CARBON OR TUNGSTEN ARC WELDING, FED QQ-R-566		LB			*	*	*		*		
			4010-894-2592	NAS305-27-0480	<80205>	WIRE ROPE ASSEMBLY,SINGLE....		EA			*	*	*		*		

(1) SOURCE, MAINT AND REC CODE (a) SOURCE CODE	(b) MAINT LEVEL	(c) REC CODE	(2) FEDERAL STOCK NUMBER	REFERENCE NUMBER	(3) DESCRIPTION	MODELS USABLE ON CH-34C	(4) UNIT OF ISSUE	(5) QTY INC IN UNIT PACK	(6) QTY INC IN UNIT	(7) 30 DAY DS/GS MAINT ALW (a) 1-20	(b) 21-50	(c) 51-100	(8) 1-YR ALW PER 100 EQUIP CNTGCY	(9) DEPOT MAINT ALW PER 100 EQUIP	(10) ILLUSTRATION (a) FIG NO	(b) ITEM NO
					CONTINUED LEG-STEEL,CARBON,TERMINAL FORK & TERMINAL TURNBUCKLE, 48 IN.LG										BULK	
			4010-894-2593	NAS305-25-0662 <80205>	WIRE ROPE ASSEMBLY,SINGLE.... LEG-STEEL,CARBON,TERMINAL FORK & TERMINAL TURNBUCKLE, 66-1/4 IN.LG		EA			*	*	*		*		
			4020-247-1737	<81349>	TWINE,VEGETABLE FIBER-12..... PLIES,S-TWIST,900 FT PER LB,70 LB MIN BREAKING STRENGTH,MIL-T-713,TYPE N, CLASS 1,1 LB TUBE		LB			*	*	*		*		
			4020-555-8334	96-290380-137 <58854>	TWINE,NYLON-PRESERVATIVE WAX. TREATED,3300 FT PER LB,32 LB MIN BREAKING STRENGTH, MIL-T-713,TYPE P,CLASS 3, 1 LB		TU			*	*	*		*		
			4710-202-9731	<81349>	TUBE,CORROSION RESISTING..... STEEL-WELDED OR SEAMLESS, BUTT WELD,1/4 IN.OD,0.035 IN.WALL THK,PLAIN END		FT			*	*	*		*		
			4710-277-3627	<81348>	TUBE,ALUMINUM ALLOY..... SEAMLESS,ANNEALED,BOTH ENDS PLAIN,3/4 IN.DIA,0.049 IN. WALL THK,12 FT TO 20 FT LG, FED WW-T-700/4,TYPE 1, TEMPER O		FT			*	*	*		*		
			4710-277-9870	<81349>	TUBE,STEEL-SEAMLESS,COLD..... FINISH,PLAIN ENDS,0.430 IN. DIA,0.035 IN.WALL THK,10 FT TO 12 FT LG,MIL-T-6736		FT			*	*	*		*		
			4710-278-6383	<81348>	TUBE,ALUMINUM ALLOY..... SEAMLESS,PLAIN ENDS,0.805 IN.DIA,0.035 IN.WALL THK,8 FT TO 12 FT LG,FED WW-T-785		FT							*		
			4710-278-6398	<81348>	TUBE,ALUMINUM ALLOY..... SEAMLESS,ANNEALED,PLAIN ENDS,1/4 IN.DIA,0.035 IN. WALL THK,10 FT TO 12 FT LG, FED WW-T-787 CONDITION O		FT			*	*	*		*		
			4710-278-7799	<81348>	TUBE,ALUMINUM ALLOY..... SEAMLESS,PLAIN ENDS,3 IN. IN.DIA,0.065 IN.WALL THK,8 FT TO 12 FT LG,FED WW-T-785		FT							*		
			4710-278-7803	<81348>	TUBE,ALUMINUM ALLOY..... SEAMLESS,PLAIN ENDS,1.750 IN.DIA,0.065 IN.WALL THK,8 FT TO 12 FT LG,FED WW-T-785		FT							*		
			4710-278-8688	<81349>	TUBE,STEEL-COLD FINISHED,.... SEAMLESS,5/8 IN.OD,0.065 IN.WALL THK,10 FT TO 12 FT		FT							*		

(1) SOURCE, MAINT AND REC CODE (a) SOURCE CODE	(b) MAINT LEVEL	(c) REC CODE	(2) FEDERAL STOCK NUMBER	REFERENCE NUMBER	(3) DESCRIPTION	MODELS USABLE ON CH-34C	(4) UNIT OF ISSUE	(5) QTY INC IN UNIT PACK	(6) QTY INC IN UNIT	(7) 30-DAY DS GS MAINT ALW (a) 1-20	(b) 21-50	(c) 51-100	(8) 1-YR ALW PER 100 EQUIP CNTGCY	(9) DEPOT MAINT ALW PER 100 EQUIP	(10) ILLUSTRATION (a) FIG NO	(b) ITEM NO
					CONTINUED LG,MIL-T-6736										BULK	
			4710-278-8726	248639 <36378>	TUBE,ALUMINUM ALLOY..... ANNEALED,SEAMLESS,0.375 IN. DIA,0.035 IN.WALL THK,8 FT TO 12 FT LG,FED WW-T-700/4		FT			*	*	*		*		
			4710-278-8727	<81348>	TUBE,ALUMINUM ALLOY..... SEAMLESS,ANNEALED,PLAIN ENDS,5/16 IN.DIA,0.035 IN. THK,8 FT TO 12 FT LG,FED WW-T-787B		FT			*	*	*		*		
			4710-278-8731	<81348>	TUBE,ALUMINUM ALLOY..... GR5052-O,ANNEALED,SEAMLESS, PLAIN ENDS,0.187 IN.DIA, 0.035 IN.WALL THK,8 FT TO 12 FT LG,FED WW-T-700/4, TYPE 1		FT			*	*	*		*		
			4710-278-8735	<81348>	TUBE,ALUMINUM ALLOY..... SEAMLESS,PLAIN ENDS,1/2 IN. DIA,0.058 IN.WALL THK,8 FT TO 12 FT LG,FED WW-T-785A		FT							*		
			4710-278-8740	<81348>	TUBE,ALUMINUM ALLOY..... SEAMLESS,ANNEALED,PLAIN ENDS,5/8 IN.DIA,8 FT TO 12 FT LG,0.049 IN.WALL THK, FED WW-T-787A		FT			*	*	*		*		
			4710-278-8742	<81348>	TUBE,ALUMINUM ALLOY..... SEAMLESS,ANNEALED,5/8 IN. DIA,0.035 IN.WALL THK,8 FT THRU 12 FT LG,FED WW-T-787A		FT			*	*	*		*		
			4710-279-0894	<81348>	TUBE,ALUMINUM ALLOY..... SEAMLESS,PLAIN ENDS,1-1/8 IN.DIA,0.065 IN.WALL THK,8 FT TO 12 FT LG,FED WW-T-785		FT			*	*	*		*		
			4710-279-0901	<81348>	TUBE,ALUMINUM ALLOY..... SEAMLESS,PLAIN ENDS,1 IN. DIA,0.065 IN.THK,8 FT TO 12 FT LG,FED WW-T-785A		FT							*		
			4710-279-0917	<81348>	TUBE,ALUMINUM ALLOY..... SEAMLESS,0.035 IN.WALL THK, 1/4 IN.DIA,1 END PLAIN,8 FT TO 12 FT LG,FED WW-T-785A		FT							*		
			4710-279-0919	<81348>	TUBE,ALUMINUM ALLOY..... SEAMLESS,PLAIN ENDS,1-1/4 IN.DIA,0.120 IN.WALL THK,8 FT TO 12 FT LG,FED WW-T-785		FT			*	*	*		*		
			4710-279-0921	<81348>	TUBE,ALUMINUM ALLOY..... SEAMLESS,PLAIN ENDS,1-1/4 IN.DIA,0.065 IN.WALL THK,8 FT TO 12 FT LG,FED WW-T-785		FT			*	*	*		*		
			4710-279-0948	<81348>	TUBE,ALUMINUM ALLOY..... <GR5052-O>,ANNEALED,		FT			*	*	*		*		

(1) SOURCE, MAINT AND REC CODE (a) SOURCE CODE	(b) MAINT LEVEL	(c) RPC CODE	(2) FEDERAL STOCK NUMBER	REFERENCE NUMBER	(3) DESCRIPTION	MODELS USABLE ON CH-34C	(4) UNIT OF ISSUE	(5) QTY INC IN UNIT PACK	(6) QTY INC IN UNIT	(7) 30-DAY DS/GS MAINT ALW (a) 1-20	(b) 21-50	(c) 51-100	(8) 1-YR ALW PER 100 EQUIP CNTGCY	(9) DEPOT MAINT ALW PER 100 EQUIP	(10) ILLUSTRATION (a) FIG NO	(b) ITEM NO
					CONTINUED SEAMLESS,BOTH ENDS PLAIN, 1/2 IN.DIA,0.049 IN.WALL THK,8 FT TO 12 FT LG,250 PSI WORKING PRESSURE, FED WW-T-700/4,TYPE 1										BULK	
			4710-279-0955	<81348>	TUBE,ALUMINUM ALLOY..... SEAMLESS,ANNEALED,PLAIN ENDS,3/8 IN.DIA,0.049 IN. THK,8 FT TO 12 FT LG,FED WW-T-787B		FT			*	*	*		*		
			4710-279-0974	<81348>	TUBE,ALUMINUM ALLOY..... SEAMLESS,PLAIN ENDS,0.375 IN.DIA,0.049 IN.WALL THK,8 FT TO 12 FT LG,FED WW-T-785		FT							*		
			4710-287-1467	<81349>	TUBE,STEEL-SEAMLESS,COLD..... FINISH,1-1/2 IN.DIA,0.125 IN.WALL THK,MIL-T-5066		FT			*	*	*		*		
			4710-287-1747	<81349>	TUBE,STEEL-SEAMLESS,COLD..... FINISH,PLAIN ENDS,2.250 IN. DIA,0.375 IN.WALL THK,8 FT TO 12 FT LG,MIL-T-6732		FT			*	*	*		*		
			4710-580-6126	<81349>	TUBE,CORROSION RESISTING..... STEEL-COLD FINISHED, SEAMLESS,ANNEALED,PLAIN ENDS,1/4 IN.DIA,0.035 IN. WALL THK,MIL-T-8606		FT			*	*	*		*		
			4710-933-4416	PE20 <23356>	TUBING,PLASTIC-POLYETHYLENE,. RIGID,0.149 IN.ID,0.375 IN. OD,20 IN.LG,MILK WHITE, PINCHED CLOSED ON BOTH ENDS,CUT AT TIME OF USE, 25 PER BAG		BG			*	*	*		*		
			4720-736-0984	EAB676 <81996>	HOSE,AIR DUCT.....		FT			*	2	2		*		
			4720-815-6354	<81349>	HOSE,NONMETALLIC..... TETRAFLUOROETHYLENE INNER CONVEYING SURFACE,CRES BRAIDED WIRE OUTER COVERING,PASSIVATED FINISH, 0.406 IN.ID,0.562 IN.OD, 1500 PSI RATED WP,3000 PSI HYDROSTATIC TEST PRESSURE, 8000 PSI BURST PRESSURE, MINUS 65 DEG F TO 450 DEG F DESIGNED TEMP RANGE, DESIGNED FOR HYDRAULIC FLUIDS,MIL-H-27267,SIZE 8		FT			2	2	4		*		
			4720-857-1729	<81349>	HOSE,NONMETALLIC..... TETRAFLUOROETHYLENE INNER CONVEYING SURFACE,CRES BRAIDED WIRE OUTER COVERING,PASSIVATED FINISH,		FT			2	3	6		*		

(1) SOURCE MAINT AND REC CODE (a) SOURCE CODE	(b) MAINT LEVEL	(c) REC CODE	(2) FEDERAL STOCK NUMBER	REFERENCE NUMBER	(3) DESCRIPTION	MODELS USABLE ON CH-34C	(4) UNIT OF ISSUE	(5) QTY INC IN UNIT PACK	(6) QTY INC IN UNIT	(7) 30-DAY DS-GS MAINT ALW (a) 1-20	(b) 21-50	(c) 51-100	(8) 1-YR ALW PER 100 EQUIP CNTGCY	(9) DEPOT MAINT ALW PER 100 EQUIP	(10) ILLUSTRATION (a) FIG NO	(b) ITEM NO
					CONTINUED 0.875 IN.ID,1.109 IN.OD, 1250 PSI RATED WP,2500 PSI HYDROSTATIC TEST PRESSURE, 3500 PSI BURST PRESSURE HIGH TEMP,5000 PSI BURST PRESSURE ROOM TEMP,MINUS 67 DEG F TO 450 DEG F DESIGNED TEMP RANGE,DESIGNED FOR HYDRAULIC FLUIDS, MIL-H-27267,SIZE 16Z										BULK	
			4720-857-1730	<81349>	HOSE,NONMETALLIC..... TETRAFLUOROETHYLENE INNER CONVEYING SURFACE,CRES BRAIDED WIRE OUTER COVERING,PASSIVATED FINISH, 1/2 IN.ID,21/32 IN.OD,1500 PSI RATED WP,3000 PSI HYDROSTATIC TEST PRESSURE, 5500 PSI BURST PRESSURE HIGH TEMP,7000 PSI BURST PRESSURE ROOM TEMP,MINUS 67 DEG F TO 450 DEG F DESIGNED TEMP RANGE,DESIGNED FOR HYDRAULIC FLUIDS, MIL-H-27267,SIZE 10		FT			3	7	13		*		
			4720-857-1731	<81349>	HOSE,NONMETALLIC..... TETRAFLUOROETHYLENE INNER CONVEYING SURFACE,CRES BRAIDED WIRE OUTER COVERING,PASSIVATED FINISH, 0.313 IN.ID,0.446 IN.OD, 1500 PSI RATED WP,3000 PSI HYDROSTATIC TEST PRESSURE, 6500 PSI BURST PRESSURE HIGH TEMP,9000 PSI BURST PRESSURE ROOM TEMP,MINUS 67 DEG F TO 450 DEG F DESIGNED TEMP RANGE,DESIGNED FOR HYDRAULIC FLUIDS, MIL-H-27267,SIZE 6		FT			3	7	14		*		
			4720-857-1732	<81349>	HOSE,NONMETALLIC..... TETRAFLUOROETHYLENE INNER CONVEYING SURFACE,CRES BRAIDED WIRE OUTER COVERING,PASSIVATED FINISH, 0.188 IN.ID,0.312 IN.OD, 1500 PSI RATED WP,3000 PSI HYDROSTATIC TEST PRESSURE, 7000 PSI BURST PRESSURE HIGH TEMP,12000 PSI BURST PRESSURE ROOM TEMP,MINUS 65		FT			16	40	81		*		

(1) SOURCE, MAINT AND REC CODE (a) SOURCE CODE	(b) MAINT LEVEL	(c) REC CODE	(2) FEDERAL STOCK NUMBER	REFERENCE NUMBER	(3) DESCRIPTION	MODELS USABLE ON CH-34C	(4) UNIT OF ISSUE	(5) QTY INC IN UNIT PACK	(6) QTY INC IN UNIT	(7) 30-DAY DS GS MAINT ALW (a) 1-20	(b) 21-50	(c) 51-100	(8) 1-YR ALW PER 100 EQUIP CNTGCY	(9) DEPOT MAINT ALW PER 100 EQUIP	(10) ILLUSTRATION (a) FIG NO	(b) ITEM NO
					CONTINUED DEG F TO 450 DEG F DESIGNED TEMP RANGE,DESIGNED FOR HYDRAULIC FLUIDS, MIL-H-27267,SIZE 4										BULK	
			4720-857-1734	<81349>	HOSE,NONMETALLIC..... TETRAFLUOROETHYLENE INNER CONVEYING SURFACE,CRES BRAIDED WIRE OUTER COVERING,PASSIVATED FINISH, 0.625 IN.ID,0.789 IN.ID, 1000 PSI RATED WP,2000 PSI HYDROSTATIC TEST PRESSURE, 3500 PSI BURST PRESSURE HIGH TEMP,5500 PSI BURST PRESSURE ROOM TEMP,MINUS 67 DEG F TO 450 DEG F DESIGNED TEMP RANGE,DESIGNED FOR HYDRAULIC FLUIDS, MIL-H-27267,SIZE 12		FT			2	3	5		*		
			4720-857-1735	<81349>	HOSE,NONMETALLIC..... TETRAFLUOROETHYLENE INNER CONVEYING SURFACE,CRES BRAIDED WIRE OUTER COVERING,PASSIVATED FINISH, 1/8 IN.ID,1/4 IN.OD,1500 PSI RATED WP,3000 PSI HYDROSTATIC TEST PRESSURE, 7500 PSI BURST PRESSURE HIGH TEMP,12000 PSI BURST PRESSURE ROOM TEMP,MINUS 67 DEG F TO 450 DEG F DESIGNED TEMP RANGE,DESIGNED FOR HYDRAULIC FLUIDS, MIL-H-27267,SIZE 3		FT			*	*	*		*		
			4720-857-1736	<81349>	HOSE,NONMETALLIC..... TETRAFLUOROETHYLENE INNER CONVEYING SURFACE,CRES BRAIDED WIRE OUTER COVERING,PASSIVATED FINISH, 1/4 IN.ID,3/8 IN.OD,1500 PSI RATED WP,3000 PSI HYDRASTATIC TEST PRESSURE, 6500 PSI BURST PRESSURE HIGH TEMP,10000 PSI BURST PRESSURE ROOM TEMP,MINUS 67 DEG F TO 450 DEG F DESIGNED TEMP RANGE,DESIGNED FOR HYDRAULIC FLUIDS, MIL-H-27267,SIZE 5		FT			57	143	286		*		
		U	4730-017-8659	MS27061-10	<96906> ADAPTER,STRAIGHT,TUBE TO..... HOSE-CRES,W/NIPPLE & NUT,		EA			*	*	*		*		

(1) SOURCE, MAINT AND REC CODE (a) SOURCE CODE	(b) MAINT LEVEL	(c) REC CODE	(2) FEDERAL STOCK NUMBER	REFERENCE NUMBER	(3) DESCRIPTION	MODELS USABLE ON CH-34C	(4) UNIT OF ISSUE	(5) QTY INC IN UNIT PACK	(6) QTY INC IN UNIT	(7) 30-DAY DS GS MAINT ALW (a) 1-20	(b) 21-50	(c) 51-100	(8) 1-YR ALW PER 100 EQUIP CNTGCY	(9) DEPOT MAINT ALW PER 100 EQUIP	(10) ILLUSTRATION (a) FIG NO	(b) ITEM NO
					CONTINUED										BULK	
					7/8 IN.-14 NF											
		U	4730-017-8660	MS27061-12 <96906>	ADAPTER,STRAIGHT,TUBE TO..... HOSE-ALUMINUM NIPPLE & NUT, CRES WIRE,NO.1-20 NEF, 1-1/16 IN.-12N,INTERNAL,FOR 5/8 IN.ID HOSE & 3/4 IN.OD TUBE		EA			*	*	*		*		
			4730-017-8661	MS27061-16 <96906>	ADAPTER,STRAIGHT,TUBE TO..... HOSE-CRES,W/SWIVEL,1-5/16 IN.-12N,1-3/8 IN.-18 NF,FOR 1.000 IN.OD TUBE		EA			*	*	*		*		
		U	4730-017-8846	MS27063-12 <96906>	ELBOW,TUBE TO HOSE-ALUMINUM.. ALLOY & CRES,WIRE,NIPPLE, NUT,SHOULDER & UNION, <45 DEG>,1-1/16 IN.-12N, 2.319 IN.LG		EA			*	*	*		*		
		U	4730-017-8887	MS27065-12 <96906>	ELBOW,TUBE TO HOSE..... ALUMINUM ALLOY,1-1/16 IN.-12N,1 END INTERNAL,FOR 3/4 IN.OD TUBE		EA			*	*	*		*		
			4730-027-6594	MS21337-2 <96906>	PLUG,PIPE-ALUMINUM,CROSS..... STOTTED HEAD,1/8 IN.-27 NPT		EA			*	*	*		*		
		U	4730-052-7689	MS27068-3C <96906>	ELBOW,SWIVEL NUT,HOSE-CRES,.. 3/8 IN.-24 NF,T END INTERNAL,FOR 3/16 IN.OD TUBE		EA			*	*	*		*		
			4730-052-7691	MS27062-8C <96906>	CONNECTOR,SWIVEL FLANGE,..... HOSE-CRES,3/4 IN.-24N,1.797 IN.LG,FOR 0.406 IN.ID HOSE, 4 MTG HOLES,0.205 IN.DIA		EA			*	*	*		*		
		U	4730-052-9516	MS27063-12C <96906>	ELBOW,SWIVEL NUT,HOSE-CRES,.. <45 DEG>,1-1/16 IN.-12N, INTERNAL,FOR 3/4 IN.OD TUBE		EA			*	*	*		*		
		U	4730-052-9517	MS27063-10C <96906>	ELBOW,TUBE TO HOSE-CRES,..... BRAZE NIPPLE,ELBOW & SHOULDER <45 DEG>,7/8 IN.-14 NF,INTERNAL,1-31/64 IN.LG		EA			*	*	*		*		
		U	4730-052-9519	MS27065-16C <96906>	ELBOW,SWIVEL NUT,HOSE-CRES,.. <90 DEG>,1-5/16 IN.-12N, INTERNAL,FOR 1 IN.OD TUBE		EA			*	*	*		*		
			4730-060-2852	MS24398D4-2 <96906>	ADAPTER,STRAIGHT,TUBE TO..... BOSS-ALUMINUM ALLOY,5/16 IN.-24 NF,7/16 IN.-20 NF, FOR 1/8 IN.OD TUBE		EA			*	*	*		*		
			4730-061-0719	MS24389D10 <96906>	TEE,TUBE TO BOSS-ALUMINUM.... ALLOY,7/8 IN.-14 NF,3 ENDS, 1 END INTERNAL,FOR 5/8 IN. OD TUBE		EA			*	*	*		*		
			4730-062-3968	MS24392-10 <96906>	NIPPLE,TUBE-STEEL,7/8..... IN.-14 NF,1-53/64 IN.LG,FOR		EA			*	*	*		*		

(1) SOURCE, MAINT AND REC CODE (a) SOURCE CODE	(b) MAINT LEVEL	(c) REC CODE	(2) FEDERAL STOCK NUMBER	REFERENCE NUMBER	(3) DESCRIPTION	MODELS USABLE ON CH-34C	(4) UNIT OF ISSUE	(5) QTY INC IN UNIT PACK	(6) QTY INC IN UNIT	(7) 30-DAY DS/GS MAINT ALW (a) 1-20	(b) 21-50	(c) 51-100	(8) 1-YR ALW PER 100 EQUIP CNTGCY	(9) DEPOT MAINT ALW PER 100 EQUIP	(10) ILLUSTRATION (a) FIG NO	(b) ITEM NO
					CONTINUED										BULK	
					5/8 IN.OD TUBE											
			4730-062-7435	MS21920-61R <96906>	CLAMP,HOSE-CRES,QUICK..... RELEASE LATCH,7.250 IN.ID, 0.625 IN.H,0.028 IN.THK		EA			*	*	*		*		
			4730-062-7436	MS21920-53R <96906>	CLAMP,HOSE.....		EA			*	*	*		*		
			4730-080-1847	MS24391D5L <96906>	PLUG,MACHINE THREAD..... ALUMINUM ALLOY,1 IN.-20 NF, 3/4 IN.LG,FOR 5/16 IN. OD TUBE		EA			*	*	*		*		
			4730-080-1852	MS24391-26 <96906>	PLUG,MACHINE THREAD-STEEL.... HEX HEAD,DRILLED HEAD,5/16 IN.-24 NF,19/32 IN.LG, FOR 1/8 IN.OD TUBE		EA							*		
		U	4730-089-6303	MS27065-12C <96906>	ELBOW,TUBE TO HOSE-CRES,..... BRAZED NIPPLE ELBOW & SHOULDER <90 DEG>,1-1/16 IN.-12N,INTERNAL		EA			*	*	*		*		
			4730-142-2167	AN818-6D <88044>	NUT,TUBE COUPLING-ALUMINUM... ALLOY,9/16 IN.-18 NF,25/32 IN.LG,FOR 5/8 IN.OD TUBE		EA			*	*	*		*		
			4730-187-0840	AN816-4 <88044>	ADAPTER,STRAIGHT,PIPE TO..... TUBE-STEEL,1/8 IN.-27 NPT, 7/16 IN.-20NF,1-7/64 IN. LG,FOR 1/4 IN.OD TUBE		EA							*		
			4730-194-1114	AN816-8 <88044>	ADAPTER,STRAIGHT,PIPE TO..... TUBE-STEEL,3/4-16 NF, 3/8 -18 NPT,FOR 1/2 IN.OD TUBE		EA			*	*	*		*		
			4730-196-9587	AN816-10-12D <88044>	ADAPTER,STRAIGHT,PIPE TO..... TUBE-ALUMINUM ALLOY,3/4 IN.-14 NPT,7/8 IN.-14 NF, 1-27/32 IN.LG,FOR 5/8 IN.OD TUBE		EA			*	*	*		*		
			4730-197-2917	MS24394D8 <96906>	ELBOW,TUBE-ALUMINUM ALLOY,... 3/4 IN.-16 NF,FOR 1/2 IN.OD TUBE		EA			*	*	*		*		
			4730-197-2921	MS24394D20 <96906>	ELBOW,TUBE-ALUMINUM ALLOY,... 1-5/8 IN.-12N,FOR 1-1/4 IN.OD TUBE		EA			*	*	*		*		
			4730-203-2658	AN818-4C <88044>	NUT,TUBE COUPLING-STEEL,7/16. IN.-20 NF,39/64 IN.LG,FOR 1/4 IN.OD TUBE		EA			*	*	*		*		
			4730-203-3831	AN818-6 <88044>	NUT,TUBE COUPLING-STEEL,9/16. IN.-18 NF,23/32 IN.LG,FOR 3/8 IN.OD TUBE		EA			*	*	*		*		
			4730-203-7720	2091D4 <80044>	PLUG,MACHINE THREAD-STEEL,... 1 IN.-18N,DRILLED HEAD		EA							*		
			4730-221-2134	AN932D1 <88044>	PLUG,PIPE-ALUMINUM ALLOY,.... COUNTERSUNK HEX HEAD,1/16 IN.-27 NPT		EA			*	*	*		*		
			4730-231-3905	AN915-1 <88044>	ELBOW,PIPE-COPPER ALLOY,.....		EA			*	*	*		*		

(1) SOURCE, MAINT AND REC CODE (a) SOURCE CODE	(b) MAINT LEVEL	(c) REC CODE	(2) FEDERAL STOCK NUMBER	REFERENCE NUMBER	(3) DESCRIPTION	MODELS USABLE ON CH-34C	(4) UNIT OF ISSUE	(5) QTY INC IN UNIT PACK	(6) QTY INC IN UNIT	(7) 30-DAY DS GS MAINT ALW (a) 1-20	(b) 21-50	(c) 51-100	(8) 1-YR ALW PER 100 EQUIP CNTGCY	(9) DEPOT MAINT ALW PER 100 EQUIP	(10) ILLUSTRATION (a) FIG NO	(b) ITEM NO
					CONTINUED 1/8 IN.-27 NPT,BOTH ENDS,1 END INTERNAL <45 DEG>										BULK	
			4730-231-4013	MS20822-6 <96906>	ELBOW,PIPE TO TUBE-STEEL,.... 9/16 IN.-18 NF,1/4 IN.-18 NPT,FOR 3/8 IN.OD TUBE		EA			*	*	*		*		
			4730-277-5358	AN819-10D <88044>	SLEEVE,FLARED,TUBE FITTING... ALUMINUM BRONZE,0.690 IN. SLEEVE OD,0.797 IN.FLANGE OD,21/32 IN.LG,FOR 5/8 IN. OD TUBE		EA			*	*	*		*		
			4730-277-5373	MS20819-8D <96906>	SLEEVE,FLARED,TUBE FITTING... ALUMINUM ALLOY,0.505 IN.ID, 0.562 IN.OD,0.562 IN.LG, FOR 1/2 IN.OD TUBE		EA			*	*	*		*		
			4730-277-6372	AN6289-4 <88044>	LOCKNUT,TUBE FITTING.....		EA			*	*	*		*		
			4730-278-0375	AN775-4 <88044>	BOLT,FLUID PRESSURE LINE..... STEEL,7/16 IN.-20 NF,7/16 IN.LG		EA			*	*	*		*		
			4730-278-0678	MS20819-4 <96906>	SLEEVE,FLARED,TUBE FITTING... STEEL,0.255 IN.ID,0.297 IN. OD,13/32 IN.LG,FOR 1/4 IN. OD TUBE		EA			*	*	*		*		
			4730-278-0682	MS20819-6 <96906>	SLEEVE,FLARED,TUBE FITTING... STEEL,0.380 IN.ID,0.432 IN. OD,1/2 IN.LG,FOR 3/8 IN.OD TUBE		EA			*	*	*		*		
			4730-278-3682	AN939D4 <88044>	ELBOW,TUBE-ALUMINUM ALLOY,... 7/16 IN.-20NF,FOR 1/4 IN.OD TUBE		EA			*	*	*		*		
			4730-278-4698	AN823-16-12D <88044>	ELBOW,PIPE TO TUBE-ALUMINUM.. ALLOY,3/4 IN.-14 NPT, 1-5/16 IN.-12 N,FOR 3/4 IN. OD TUBE		EA			*	*	*		*		
			4730-278-5126	MS20826-4D <96906>	TEE,PIPE TO TUBE-ALUMINUM.... ALLOY,1/8 IN.-27 NPT,7/16 IN.-20 NF,FOR 1/4 IN.OD TUBE		EA			*	*	*		*		
			4730-278-5817	AN777-4D <88044>	CONNECTOR,MULTIPLE,FLUID..... PRESSURE LINE-ALUMINUM ALLOY,7/16 IN.-20 NF,0.438 IN.ID,1-5/8 IN.LG		EA			*	*	*		*		
			4730-278-6070	MS20819-6D <96906>	SLEEVE,FLARED,TUBE FITTING... ALUMINUM ALLOY,FOR 3/8 IN. OD TUBE		EA			*	*	*		*		
			4730-278-8225	MS28740-16 <96906>	ADAPTER,STRAIGHT,TUBE TO..... HOSE-ALUMINUM ALLOY,1-5/16 IN.-12N,BOTH ENDS,FOR 1 IN. OD TUBE,ONE END INTERNAL, U/W 7/8 IN.ID HOSE,1-15/64 IN.OD HOSE		EA			*	*	*		*		
			4730-278-8230	MS28740-5 <96906>	ADAPTER,STRAIGHT,TUBE TO.....		EA							*		

(1) SOURCE, MAINT AND REC CODE (a) SOURCE CODE	(b) MAINT LEVEL	(c) REC CODE	(2) FEDERAL STOCK NUMBER	REFERENCE NUMBER	(3) DESCRIPTION	MODELS USABLE ON CH-34C	(4) UNIT OF ISSUE	(5) QTY INC IN UNIT PACK	(6) QTY INC IN UNIT	(7) 30-DAY DS/GS MAINT ALW (a) 1-20	(b) 21-50	(c) 51-100	(8) 1-YR ALW PER 100 EQUIP CNTGCY	(9) DEPOT MAINT ALW PER 100 EQUIP	(10) ILLUSTRATION (a) FIG NO	(b) ITEM NO
					CONTINUED HOSE-STEEL & ALUMINUM ALLOY,FOR 1/4 IN.ID HOSE & 5/16 IN.OD TUBE										BULK	
			4730-278-8800	AN814-6L <88044>	PLUG,MACHINE THREAD-STEEL.... HEX HEAD,DRILLED HEAD,9/16 IN.-18 NF,FOR 3/8 IN.OD TUBE		EA			*	*	*		*		
			4730-287-0067	MS20819-12D <96906>	SLEEVE,FLARED,TUBE FITTING... ALUMINUM ALLOY,0.826 IN. SLEEVE OD,0.972 IN.FLANGE OD,11/16 IN.LG,FOR 3/4 IN. OD TUBE		EA			*	*	*		*		
			4730-287-0267	AN818-24 <88044>	NUT,TUBE COUPLING-STEEL,..... 1-7/8 IN.-12N,1-13/32 IN. LG,FOR 1-1/2 IN.OD TUBE		EA			*	*	*		*		
			4730-287-0288	AN818-8D <88044>	NUT,TUBE COUPLING-ALUMINUM... ALLOY,3/4 IN.-16 NF,27/32 IN.LG,FOR 1/2 IN.OD TUBE		EA			*	*	*		*		
			4730-287-0289	AN818-4D <88044>	NUT,TUBE COUPLING-ALUMINUM... ALLOY,7/16 IN.-20 NF,39/64 IN.LG,FOR 1/4 IN.OD TUBE		EA			*	*	*		*		
			4730-287-0290	AN818-10D <88044>	NUT,TUBE COUPLING-ALUMINUM... ALLOY,7/8 IN.-14 NF,31/32 IN.LG,FOR 5/8 IN.OD TUBE		EA			*	*	*		*		
			4730-287-0292	AN818-5D <88044>	NUT,TUBE COUPLING-ALUMINUM... ALLOY,1/2 IN.-20 NF,43/64 IN.LG,FOR 5/16 IN.OD TUBE		EA			*	*	*		*		
			4730-287-0295	AN818-10 <88044>	NUT,TUBE COUPLING-STEEL,7/8.. IN.-14 NF,FOR 5/8 IN.OD TUBE		EA			*	*	*		*		
			4730-287-1024	MS20822-8D <96906>	ELBOW,PIPE TO TUBE-ALUMINUM.. ALLOY,3/8 IN.-18 NPT,3/4 IN.-16 NF,FOR 1/2 IN.OD TUBE		EA			*	*	*		*		
			4730-287-3053	MS20819-5D <96906>	SLEEVE,FLARED,TUBE-ALUMINUM.. ALLOY,0.366 IN.SLEEVE OD, 0.445 IN.FLANGE OD,7/16 IN. LG,FOR 5/16 IN.OD TUBE		EA			*	*	*		*		
			4730-287-3712	AN932M3 <88044>	PLUG,PIPE-MAGNESIUM,HEX..... HEAD,1/4 IN.-18 NPT		EA			*	*	*		*		
			4730-289-5894	AN737RM48 <88044>	CLAMP,HOSE-STEEL,RADIAL..... MACHINE SCREW TYPE, SELF-SEALING HOSE,1-5/64 IN.ID,FOR 3/4 IN.ID HOSE		EA			*	*	*		*		
			4730-302-8641	MS20819-4D <96906>	SLEEVE,FLARED,TUBE FITTING... ALUMINUM ALLOY,FOR 1/4 IN. OD TUBE		EA			*	*	*		*		
			4730-334-7845	AN818-4 <88044>	NUT,TUBE COUPLING-STEEL,7/16. IN.-20 NF,FOR 1/4 IN.OD TUBE		EA			*	*	*		*		
			4730-433-2582	155-4D <00624>	COUPLING.....		EA			*	*	*		*		

(1) SOURCE, MAINT AND REC CODE (a) SOURCE CODE	(b) MAINT LEVEL	(c) REC CODE	(2) FEDERAL STOCK NUMBER	REFERENCE NUMBER		(3) DESCRIPTION	MODELS USABLE ON CH-34C	(4) UNIT OF ISSUE	(5) QTY INC IN UNIT PACK	(6) QTY INC IN UNIT	(7) 30-DAY DS GS MAINT ALW (a) 1-20	(b) 21-50	(c) 51-100	(8) 1-YR ALW PER 100 EQUIP CNTGCY	(9) DEPOT MAINT ALW PER 100 EQUIP	(10) ILLUSTRATION (a) FIG NO	(b) ITEM NO
			4730-486-5318	155S4-6	<00624>	COUPLING HALF,HYDRAULIC,..... SELF-SEALING		EA			*	*	*		*	BULK	
			4730-541-8459	150S1-4D	<00624>	COUPLING HALF,SELF-SEALING... ALUMINUM ALLOY,7/16 IN.-20 NF,U/W 1/4 IN.OD TUBE		EA			*	*	*		*		
			4730-554-7831	MS28760-6	<96906>	ADAPTER,STRAIGHT,TUBE TO..... HOSE-ALUMINUM ALLOY,FOR 11/32 IN.ID HOSE,& 3/8 IN. OD TUBE		EA			*	*	*		*		
			4730-555-0883	T015519S4-10D	<00624>	COUPLING HALF,SELF-SEALING... ALUMINUM ALLOY,7/8 IN.-14 NF,FOR 5/8 IN.OD TUBE, 2-19/32 IN.LG,WITH 2-1/2 IN.OD MTG FLANGE,6 BOLT HOLES,0.201 IN.DIA,3000 PSI OPR PRESS.		EA			*	*	2		*		
			4730-591-0659	155S11-12D	<70128>	COUPLING HALF,SELF-SEALING... ALUMINUM,1-1/16 IN.-12N, 2.500 IN.OD FLANGE,6 BOLT HOLES,0.201 IN.DIA,FOR 3/4 IN.OD TUBE		EA			*	*	*		*		
			4730-639-9023	MS20760D24	<96906>	ADAPTER,STRAIGHT,PIPE TO..... TUBE-ALUMINUM ALLOY,1-7/8 IN.-12 NF,1-3/4 IN.LG,FOR 1-1/2 IN.OD TUBE		EA			*	*	*		*		
			4730-684-6903	MS24395D4	<96906>	TEE,TUBE-ALUMINUM ALLOY,..... 7/16 IN.-20 NF,3 ENDS,FOR 1/4 IN.OD TUBE		EA			*	*	*		*		
			4730-684-6914	MS24392D12	<96906>	NIPPLE,TUBE-ALUMINUM ALLOY,.. 1-11/16 IN.-12N,BOTH ENDS, FOR 3/4 IN.OD TUBE		EA			*	*	*		*		
			4730-684-6917	MS24398D6-4	<96906>	ADAPTER,STRAIGHT,TUBE TO..... BOSS-ALUMINUM ALLOY,7/16 IN.-20 NF,EXTERNAL,FOR 1/4 IN.OD TUBE,9/16 IN.-18 NF, INTERNAL,FOR 3/8 IN.OD TUBE,1-25/64 IN.LG		EA			*	*	*		*		
			4730-684-7292	MS2439808-4	<96906>	REDUCER,TUBE-ALUMINUM..... ALLOY,3/4 IN.-16 NF,7/16 IN.-20 NF,FOR 1/2 IN.& 1/4 IN.OD TUBES		EA			*	*	*		*		
			4730-684-7447	MS24399D26	<96906>	REDUCER,TUBE-ALUMINUM..... ALLOY,1-5/8 IN.-12N,1-1/16 IN.-12N,FOR 1-1/4 IN.& 3/4 IN.OD TUBES		EA			*	*	*		*		
			4730-684-7452	MS24399D14	<96906>	REDUCER,TUBE-ALUMINUM ALLOY,. 7/8 IN.-14 NF,7/16 IN.-20 NF,FOR 1/4 IN.& 5/8 IN.OD TUBE		EA			*	*	*		*		
			4730-698-4030	AN929-4S	<88044>	CAP,TUBE-CRES,7/16 IN.-20.... NF,FOR 1/4 IN.OD TUBE, 1 END INTERNAL		EA			*	*	*		*		

(1) SOURCE, MAINT AND REC CODE (a) SOURCE CODE	(b) MAINT LEVEL	(c) REC CODE	(2) FEDERAL STOCK NUMBER	REFERENCE NUMBER	(3) DESCRIPTION	MODELS USABLE ON CH-34C	(4) UNIT OF ISSUE	(5) QTY INC IN UNIT PACK	(6) QTY INC IN UNIT	(7) 30-DAY DS/GS MAINT ALW (a) 1-20	(b) 21-50	(c) 51-100	(8) 1-YR ALW PER 100 EQUIP CNTGCY	(9) DEPOT MAINT ALW PER 100 EQUIP	(10) ILLUSTRATION (a) FIG NO	(b) ITEM NO
			4730-720-1511	AN933B2 <88044>	PLUG,PIPE-COPPER,HEX HEAD,... DRILLED HEAD,1/4 IN.-18 NPT		EA			*	*	*		*	BULK	
			4730-725-0100	MS24395D6 <96906>	TEE,TUBE-ALUMINUM ALLOY,..... 9/16 IN.-18 NF,3 ENDS,FOR 3/8 IN.OD TUBE		EA			*	*	*		*		
			4730-725-4351	MS24394D4 <96906>	ELBOW,TUBE-ALUMINUM ALLOY,... 7/16 IN.20 NF,BOTH ENDS,FOR 3/4 IN.OD TUBE		EA			*	*	*		*		
			4730-752-9336	MS24399D6 <96906>	REDUCER,TUBE-ALUMINUM..... ALLOY,9/16 IN.-18 NF,3/8 IN.-24 NF,FOR 3/8 IN.& 3/16 IN.OD TUBE		EA			*	*	*		*		
			4730-803-5049	MS24396D4 <96906>	ELBOW,TUBE-ALUMINUM ALLOY,... 7/16 IN.-20 NF,BOTH ENDS, FOR 1/4 IN.OD TUBE		EA			*	*	*		*		
			4730-803-5050	MS24394D10 <96906>	ELBOW,TUBE-ALUMINUM ALLOY,... 7/8 IN.-14 NF,BOTH ENDS,FOR 5/8 IN.OD TUBE		EA			*	*	*		*		
			4730-803-5051	MS24396D12 <96906>	ELBOW,TUBE-ALUMINUM ALLOY,... 1-1/16 IN.-12N,BOTH ENDS, FOR 3/4 IN.OD TUBE		EA			*	*	*		*		
			4730-804-1901	MS24399D27 <96906>	REDUCER,TUBE-ALUMINUM..... ALLOY,1-5/16 IN.-12N,1-5/8 IN.-12N,FOR 1 IN.& 1-1/4 IN.OD TUBE		EA			*	*	*		*		
			4730-816-3487	MS24403D4 <96906>	CROSS,TUBE-ALUMINUM ALLOY,... 7/16 IN.-20 NF,4 ENDS,FOR 1/4 IN.OD TUBE		EA			*	*	*		*		
			4730-826-6460	AN933B12 <88044>	PLUG,PIPE-COPPER ALLOY,HEX... HEAD,1-1/2 IN.-11-1/2 NPT		EA			*	*	*		*		
			4730-834-9560	MS24392D4 <96906>	NIPPLE,TUBE-ALUMINUM ALLOY... 7/16 IN.-20 NF,1-1/4 IN.LG, FOR1/4 IN.OD TUBE		EA			*	*	*		*		
			4730-866-1829	MS24392D10 <96906>	NIPPLE,TUBE-ALUMINUM ALLOY,.. 7/8 IN.-14 NF,FOR 5/8 IN.OD TUBE		EA			*	*	*		*		
			4730-877-5582	MS24399D8 <96906>	REDUCER,TUBE-ALUMINUM..... ALLOY,9/16 IN.-18 NF,1/2 IN.-20 NF,FOR 3/8 IN.& 5/16 IN.OD TUBES,1-13/32 IN.LG		EA			*	*	*		*		
			4730-879-4071	AN816-10-12B <88044>	ADAPTER,STRAIGHT,PIPE TO..... TUBE-COPPER ALLOY,7/8 IN.-14 NF,3/4 IN.-14 NPT		EA			*	*	*		*		
			4730-889-2283	MS24397D4 <96906>	REDUCER,BOSS-ALUMINUM,7/16... IN.-20 NF,INTERNAL,1-1/16 IN.-12N,EXTERNAL,31/32 IN. LG,FOR 1/4 IN.AND 3/4 IN.OD TUBE		EA			*	*	*		*		
		U	4730-889-2473	MS27053-16 <96906>	ADAPTER,STRAIGHT,TUBE TO..... HOSE-CRES,W/SWIVEL NUT, 1-5/16 IN.-12N,1-3/8 IN.-18 NEF,FOR 1 IN.& 1.109 IN.OD		EA			*	*	*		*		

(1) SOURCE, MAINT AND REC CODE (a) SOURCE CODE	(b) MAINT LEVEL	(c) REC CODE	(2) FEDERAL STOCK NUMBER	REFERENCE NUMBER	(3) DESCRIPTION	MODELS USABLE ON CH-34C	(4) UNIT OF ISSUE	(5) QTY INC IN UNIT PACK	(6) QTY INC IN UNIT	(7) 30-DAY DS/GS MAINT ALW (a) 1-20	(b) 21-50	(c) 51-100	(8) 1-YR ALW PER 100 EQUIP CNTGCY	(9) DEPOT MAINT ALW PER 100 EQUIP	(10) ILLUSTRATION (a) FIG NO	(b) ITEM NO
					CONTINUED										BULK	
					TUBES,1 END INTERNAL											
		U	4730-952-5528	MS27061-8C <96906>	ADAPTER,STRAIGHT,TUBE TO..... HOSE-CRES,W/SWIVEL NUT, 7/8 IN.-14 NF		EA			*	*	*		*		
		U	4730-952-5529	MS27061-6C <96906>	ADAPTER,STRAIGHT,TUBE TO..... HOSE-CRES W/SWIVEL NUT,9/16 IN.-18 NF		EA			11	28	56		*		
		U	4730-952-5530	MS27061-5C <96906>	ADAPTER,STRAIGHT,TUBE TO..... HOSE-CRES,W/SWIVEL NUT,1/2 IN.-20 NF		EA			*	*	*		*		
		U	4730-952-5532	MS27061-4C <96906>	ADAPTER,STRAIGHT,TUBE TO..... HOSE-CRES,W/SWIVEL NUT,7/16 IN.-20 NF		EA			*	*	*		*		
		U	4730-952-5534	MS27061-12C <96906>	ADAPTER,STRAIGHT,TUBE TO..... HOSE-CRES,W/SWIVEL NUT, 1-1/16 IN.-12N		EA			*	*	*		*		
		U	4730-952-5535	MS27061-10C <96906>	ADAPTER,STRAIGHT,TUBE TO..... HOSE-CRES,W/SWIVEL NUT,7/8 IN.-14 NF		EA			*	*	*		*		
		U	4730-952-5536	MS27061-3C <96906>	ADAPTER,STRAIGHT,TUBE TO..... HOSE-CRES,W/SWIVEL NUT,3/8 IN.-24 NF		EA			*	*	*		*		
		U	4730-967-9511	MS27070-3C <96906>	SLEEVE,COMPRESSION,..... TUBE-HOSE FITTING-CRES, 0.141 IN.ID,0.294 IN.OD, 0.230 IN.LG		EA			*	*	*		*		
		U	4730-967-9512	MS27069-3C <96906>	NUT,HOSE COUPLING-CRES,..... 3/8 IN.-32 NEF,7/16 IN.OD, 5/8 IN.LG		EA			*	*	*		*		
		U	4730-967-9513	MS27069-4C <96906>	NUT,HOSE COUPLING-CRES,..... 1/2 IN.-28 NEF,9/16 IN.OD, 0.806 IN.LG		EA			*	*	*		*		
		U	4730-967-9514	MS27069-5C <96906>	NUT,HOSE COUPLING-CRES,..... 9/16 IN.-24 NEF,5/8 IN.OD, 53/64 IN.LG		EA			*	*	*		*		
		U	4730-967-9515	MS27069-6C <96906>	NUT,HOSE COUPLING-CRES,..... 5/8 IN.-24 NEF,11/16 IN.OD, 55/64 IN.LG		EA			*	*	*		*		
		U	4730-967-9516	MS27069-8C <96906>	NUT,HOSE COUPLING-CRES,..... 3/4 IN.-24N,0.700 IN.ID, 0.875 IN.OD,0.979 IN.LG		EA			*	*	*		*		
		U	4730-967-9517	MS27069-10C <96906>	NUT,HOSE COUPLING-CRES,..... 7/8 IN.-20 NEF,1 IN.OD, 1-5/64 IN.LG		EA			*	*	*		*		
		U	4730-967-9518	MS27069-12C <96906>	SOCKET,HOSE COUPLING-CRES.... 1 IN.-20 NEF,1-1/8 IN.OD, 1-5/32 IN.LG		EA			6	15	29		*		
		U	4730-967-9519	MS27069-16C <96906>	NUT,HOSE COUPLING-CRES,..... 1-3/8 IN.-18 NEF,1-1/2 IN. OD,1-1/4 IN.LG		EA			*	*	*		*		
		U	4730-967-9521	MS27070-4C <96906>	SLEEVE,COMPRESSON,TUBE-HOSE..		EA			*	*	*		*		

(1) SOURCE, MAINT AND REC CODE (a) SOURCE CODE	(b) MAINT LEVEL	(c) REC CODE	(2) FEDERAL STOCK NUMBER	REFERENCE NUMBER	(3) DESCRIPTION	MODELS USABLE ON CH-34C	(4) UNIT OF ISSUE	(5) QTY INC IN UNIT PACK	(6) QTY INC IN UNIT	(7) 30-DAY DS/GS MAINT ALW (a) 1-20	(b) 21-50	(c) 51-100	(8) 1-YR ALW PER 100 EQUIP CNTGCY	(9) DEPOT MAINT ALW PER 100 EQUIP	(10) ILLUSTRATION (a) FIG NO	(b) ITEM NO
					CONTINUED FITTING-CRES,0.211 IN.ID, 0.375 IN.OD,0.285 IN.LG										BULK	
		U	4730-967-9522	MS27070-5C <96906>	SLEEVE,HOSE COUPLING-CRES,... 0.274 IN.ID,0.437 IN.OD, 0.285 IN.LG		EA			*	*	*		*		
		U	4730-967-9524	MS27070-8C <96906>	SLEEVE,COMPRESSION,TUBE..... HOSE FITTING-CRES,0.432 IN. ID,0.625 IN.OD,0.355 IN.LG		EA			*	*	*		*		
		U	4730-967-9525	MS27070-10C <96906>	SLEEVE,COMPRESSION,..... TUBE-HOSE FITTING-CRES, 0.532 IN.ID,0.745 IN.OD, 0.380 IN.LG		EA			*	*	*		*		
		U	4730-967-9526	MS27070-12C <96906>	SLEEVE,COMPRESSION,..... TUBE-HOSE FITTING-CRES, 0.658 IN.ID,0.875 IN.OD, 0.400 IN.LG		EA			*	*	*		*		
		U	4730-967-9527	MS27070-16C <96906>	SLEEVE,COMPRESSION TUBE..... HOSE FITTING-CRES,0.908 IN. ID,1.155 IN.OD,0.500 IN.LG		EA			*	*	*		*		
			4730-969-0605	MS20819-4C <96906>	SLEEVE,FLARED,TUBE FITTING... STEEL,0.297 IN.OD SLEEVE, 0.383 IN.OD FLANGE,33 DEG ANGLE,13/32 IN.LG,FOR 1/4 IN.OD TUBE		EA			*	*	*		*		
			4730-969-6653	MS27064-16C <96906>	ELBOW,SWIVEL FLANGE,HOSE..... CRES,BRAZE NIPPLE,ELBOW & SHOULDER,1-3/8 IN.-18 NEF, FOR 7/8 IN.ID HOSE,4 MTG HOLES,0.205 IN.DIA		EA			*	*	*		*		
		U	4730-969-6659	MS27063-16C <96906>	ELBOW,SWIVEL NUT,HOSE-CRES,.. BRAZE NIPPLE,ELBOW & SHOULDER <45 DEG>,1-5/16 IN.-12N,INTERNAL,1-63/64 IN.LG		EA			*	*	*		*		
		U	4730-969-6665	MS27068-8C <96906>	ELBOW,SWIVEL NUT,HOSE-CRES,.. FORGED <90 DEG>,3/4 IN.-16 NF		EA			2	5	9		*		
		U	4730-969-6666	MS27068-6C <96906>	ELBOW,SWIVEL NUT,HOSE-CRES,.. 9/16 IN.-18 NF,INTERNAL, FOR 3/8 IN.OD TUBE		EA			2	5	9		*		
		U	4730-969-6668	MS27068-4C <96906>	ELBOW,SWIVEL NUT,HOSE-CRES,.. FORGED <90 DEG>,7/16 IN.-20 NF		EA			*	*	*		*		
		U	4730-969-6669	MS27067-8C <96906>	ELBOW,TUBE TO HOSE-CRES,..... FORGED <90 DEG>,3/4 IN.-16 NF		EA			*	*	*		*		
		U	4730-969-6670	MS27067-6C <96906>	ELBOW,TUBE TO HOSE-CRES..... FORGED <45 DEG>,9/16 IN.-18 NF		EA			2	5	10		*		
		U	4730-982-9736	MS27053-6C <96906>	ADAPTER,STRAIGHT,TUBE TO..... HOSE-CRES,9/16 IN.-18 NF,		EA			*	*	*		*		

(1) SOURCE, MAINT AND REC CODE (a) SOURCE CODE	(b) MAINT LEVEL	(c) REC CODE	(2) FEDERAL STOCK NUMBER	REFERENCE NUMBER	(3) DESCRIPTION	MODELS USABLE ON CH-34C	(4) UNIT OF ISSUE	(5) QTY INC IN UNIT PACK	(6) QTY INC IN UNIT	(7) 30-DAY DS GS MAINT ALW (a) 1-20	(b) 21-50	(c) 51-100	(8) 1-YR ALW PER 100 EQUIP CNTGCY	(9) DEPOT MAINT ALW PER 100 EQUIP	(10) ILLUSTRATION (a) FIG NO	(b) ITEM NO
					CONTINUED INTERNAL,FOR 3/8 IN.OD TUBE										BULK	
			5305-044-4181	MS35266-75 <96906>	SCREW,MACHINE-STEEL,CARBON,.. FILLISTER HEAD,DRILLED HEAD,NO.10-32 NF,3.000 IN. LG		EA			*	*	*		*		
			5305-045-3180	MS246944S101 <96906>	SCREW,MACHINE-STEEL,FLAT..... HEAD,COUNTERSUNK HEAD, RECESSED HEAD,1/4 IN.-28 NF,29/32 IN.LG		EA			*	*	*		*		
			5305-051-2352	MS24693S47 <96906>	SCREW,MACHINE-STEEL,CARBON,.. FLAT HEAD,RECESSED HEAD, NO.8-32 NC,5/16 IN.LG		EA			*	*	*		*		
			5305-052-3537	MS35202-46 <96906>	SCREW,MACHINE-ALUMINUM..... ALLOY,FLAT,COUNTERSUNK HEAD,CROSS RECESSED HEAD, NO.8-32 NC,1 IN.LG		EA			*	*	*		*		
			5305-052-9956	MS24619-14 <96906>	SCREW,TAPPING,THREAD..... FORMING-STEEL,FLAT HEAD, RECESSED HEAD,NO.6-20 THD, 3/4 IN.LG		EA			*	*	*		*		
			5305-052-9971	MS24619-25 <96906>	SCREW,TAPPING,THREAD..... FORMING-STEEL,CARBON,FLAT, COUNTERSUNK HEAD,CROSS RECESSED HEAD,NO.8-18 THD, 3/4 IN.LG		HD			*	*	*		*		
			5305-052-9977	MS24619-40 <96906>	SCREW,TAPPING,THREAD..... FORMING-STEEL,CARBON,FLAT, COUNTERSUNK HEAD,CROSS RECESSED HEAD,NO.10-16 THD, 3/4 IN.LG		HD			*	*	*		*		
			5305-053-1118	MS24621-17 <96906>	SCREW,TAPPING,THREAD..... FORMING-STEEL,CARBON,PAN HEAD,RECESSED HEAD,NO.6-20 THD,3/8 IN.LG		HD			*	*	*		*		
			5305-054-5646	MS51957-12 <96906>	SCREW,MACHINE-CRES,PAN HEAD,.. RECESSED HEAD,NO.4-40 NF, 3/16 IN.LG		HD			*	*	*		*		
			5305-059-8248	MS35214-23 <96906>	SCREW,MACHINE-BRASS,PAN..... HEAD,RECESSED HEAD,NO. 6-32 NC,1/4 IN.LG		HD			*	*	*		*		
			5305-059-8280	MS35214-55 <96906>	SCREW,MACHINE-BRASS,PAN..... HEAD,RECESSED HEAD,NO. 10-24 NC,1/2 IN.LG		EA			*	*	*		*		
			5305-059-8807	MS35219-59 <96906>	SCREW,MACHINE-ALUMINUM..... ALLOY,PAN HEAD,RECESSED HEAD,NO.10-32 NF,1 IN.LG		EA			*	*	*		*		
			5305-060-5752	EAB1724 <81996>	SCREW,MACHINE.....		EA			*	*	*		*		
			5305-060-5753	61-40106-0316 <89944>	SCREW,MACHINE..... ALLOY,PAN HEAD,RECESSED HEAD,1/4 IN.-28 NF,1/2 IN. LG		EA			*	*	*		*		

(1) SOURCE, MAINT AND REC CODE (a) SO, RCL CODE	(b) MAINT LEVEL	(c) REC CODE	(2) FEDERAL STOCK NUMBER	REFERENCE NUMBER		(3) DESCRIPTION	MODELS USABLE ON CH-34C	(4) UNIT OF ISSUE	(5) QTY INC IN UNIT PACK	(6) QTY INC IN UNIT	(7) 30-DAY DS/GS MAINT ALW (a) 1-20	(b) 21-50	(c) 51-100	(8) 1 YR ALW PER 100 EQUIP CNTGCY	(9) DEPOT MAINT ALW PER 100 EQUIP	(10) ILLUSTRATION (a) FIG NO	(b) ITEM NO
			5305-067-9862	MS35219-69	<96906>	SCREW,MACHINE-ALUMINUM..... ALLOY,PAN HEAD,RECESSED HEAD,1/4 IN.-28 NF,1/2 IN. LG		EA			*	*	*		*	BULK	
			5305-068-0522	MS24621-45	<96906>	SCREW,TAPPING,THREAD FORMING. STEEL,PAN HEAD, RECESSED HEAD,DOG POINT, NO.10-16 THD,3/4 IN.LG		GR			*	*	*		*		
			5305-068-9191	MS35274-60	<96906>	SCREW,MACHINE.....		GR			*	*	*		*		
			5305-145-7013	AN503-8-14	<88044>	SCREW,MACHINE-STEEL,..... FILLISTER HEAD,DRILLED HEAD,NO.8-32 NC,7/8 IN.LG		EA			*	*	*		*		
			5305-145-7014	AN500AD8-16	<88044>	SCREW,MACHINE-CRES,..... FILLISTER HEAD,DRILLED HEAD,NO.8-32 NC,1 IN.LG		HD			*	*	*		*		
			5305-150-9208	AN502-10-16	<88044>	SCREW,MACHINE-STEEL..... FILLISTER HEAD,DRILLED HEAD,NO.10-32 NF,1 IN.LG		HD			*	*	*		*		
			5305-150-9210	AN502-10-12	<88044>	SCREW,MACHINE-STEEL,..... FILLISTER HEAD,DRILLED HEAD,NO.10-32 NF,3/4 IN.LG		EA			*	*	*		*		
			5305-150-9515	AN502-416-16	<88044>	SCREW,MACHINE-STEEL,..... FILLISTER HEAD,DRILLED HEAD,1/4 IN.-28 NF,1 IN.LG		EA			*	*	*		*		
			5305-150-9964	MS35190-28	<96906>	SCREW,MACHINE-STEEL,CARBON,.. FLAT HEAD,RECESSED HEAD, NO.6-32 NC,5/8 IN.LG		EA			*	*	*		*		
			5305-151-0386	AN500A6-10	<88044>	SCREW,MACHINE-STEEL,CARBON,.. FILLISTER HEAD,DRILLED HEAD,NO.6-32 NC,5/8 IN.LG		HD			*	*	*		*		
			5305-151-0975	AN501-8-12	<88044>	SCREW,MACHINE-STEEL,CARBON,.. FILLISTER HEAD,NO.8-36 NF, 3/4 IN.LG		EA			*	*	*		*		
			5305-151-2084	AN507-440R5	<88044>	SCREW,MACHINE-STEEL,CARBON,.. FLAT HEAD,RECESSED HEAD,NO. 4-40 NC,5/16 IN.LG		HD			*	*	*		*		
			5305-156-2817	AN505-8R18	<88044>	SCREW,MACHINE-STEEL,CARBON,.. FLAT HEAD,RECESSED HEAD,NO. 8-32 NC,1-1/8 IN.LG		EA			*	*	*		*		
			5305-156-2937	MS35190-249	<96906>	SCREW,MACHINE-STEEL,FLAT..... HEAD,RECESSED HEAD,NO.8-32 NC,1/4 IN.LG		EA			*	*	*		*		
			5305-175-3230	MS21318-14	<96906>	SCREW,DRIVE-STEEL,RD HEAD,... NO.2 THD,3/16 IN.LG		MX							*		
			5305-180-0005	AN525-8R6	<88044>	SCREW,MACHINE-STEEL,WASHER... HEAD,RECESSED HEAD,NO.8-36 NF,3/8 IN.LG		EA			*	*	*		*		
			5305-180-3322	AN525-10R6	<88044>	SCREW,MACHINE-STEEL,WASHER... HEAD,RECESSED HEAD,NO.10-32 NF,3/8 IN.LG		HD			*	*	*		*		
			5305-206-8189	M400-17	<77200>	SCREW,MACHINE-STEEL,RD..... HEAD,NO.4-36 NS,1/4 IN.LG		EA			*	*	*		*		

(1) SOURCE, MAINT AND REC CODE (a) SOURCE CODE	(b) MAINT LEVEL	(c) REC CODE	(2) FEDERAL STOCK NUMBER	REFERENCE NUMBER		(3) DESCRIPTION	MODELS USABLE ON CH-34C	(4) UNIT OF ISSUE	(5) QTY INC IN UNIT PACK	(6) QTY INC IN UNIT	(7) 30-DAY DS/GS MAINT ALW (a) 1-20	(b) 21-50	(c) 51-100	(8) 1-YR ALW PER 100 EQUIP CNTGCY	(9) DEPOT MAINT ALW PER 100 EQUIP	(10) ILLUSTRATION (a) FIG NO	(b) ITEM NO
			5305-207-7468	MS35214-16	<96906>	SCREW,MACHINE-BRASS,PAN..... HEAD,RECESSED HEAD NO.4-40 NC,1/2 IN.LG		HD			*	*	*		*	BULK	
			5305-249-0528	MS51017-35	<96906>	SETSCREW-STEEL ALLOY,..... HEADLESS,HEX SOCKET DRIVE, CUP POINT,NO.8-32 NC,1/4 IN.LG		EA							*		
			5305-253-5609	MS21318-13	<96906>	SCREW,DRIVE-STEEL RD HEAD,... NO.2 THD,1/8 IN.LG		HD							*		
			5305-253-5618	MS21318-27	<96906>	SCREW,DRIVE-STEEL,NO.6 THD,.. 1/4 IN.LG		BX			*	*	*		*		
			5305-271-5222	AN502-10-26	<88044>	SCREW,MACHINE-STEEL,FILLISTER HEAD,DRILLED HEAD,NO.10-32 NF,1-5/8 IN.LG		HD			*	*	*		*		
			5305-271-7746	AN115807	<88044>	SCREW,MACHINE-STEEL,..... FILLISTER HEAD,DRILLED HEAD,NO.10-32 NF,0.375 IN. LG		EA			*	*	*		*		
			5305-271-8361	AN500A3-5	<88044>	SCREW,MACHINE-STEEL,FILLISTER HEAD,DRILLED HEAD,NO.3-48 NC,5/16 IN.LG		HD							*		
			5305-271-8679	AN503-516-12	<88044>	SCREW,MACHINE-STEEL,..... FILLISTER HEAD,DRILLED HEAD,5/16 IN.-18 NC,3/4 IN. LG		GR			*	*	*		*		
			5305-282-3385	AN565C10-5	<88044>	SETSCREW-STEEL ALLOY,..... HEADLESS,SLOTTED,FULL DOG POINT,NO.10-24 NC,5/16 IN. LG		HD			*	*	*		*		
			5305-282-5509	AN115805	<88044>	SCREW,MACHINE-STEEL,FLAT..... FILLISTER HEAD,NO.10-32 NF, 1/4 IN.LG		HD							*		
			5305-478-8220	5473	<03488>	SCREW,COUNTER WRENCHING.....		EA			*	*	*		*		
			5305-531-0447	NAS335CP12	<80205>	SCREW,MACHINE-STEEL,FLAT..... HEAD,DRILLED SHANK,5/16 IN.-24 NF,1-11/32 IN.LG		EA			*	*	*		*		
			5305-616-2013	61-40110-0012	<89944>	SCREW,MACHINE-BRASS,FLAT..... FILLISTER HEAD,NO.0-80 NF, 0.187 IN.LG		EA			*	*	*		*		
			5305-622-9486	MS35266-68	<96906>	SCREW,MACHINE-STEEL,CARBON,.. FILLISTER HEAD,DRILLED HEAD,NO.10-32 NF,1-1/4 IN. LG		HD			*	*	*		*		
			5305-628-5586	AC72-14	<88623>	SCREW.....		EA							*		
			5305-638-0635	AN115907	<88044>	SCREW,MACHINE-FLAT..... FILLISTER HEAD,DRILLED HEAD,1/4 IN.-28 NF,1/2 IN. LG		EA			*	*	*		*		
			5305-639-8154	MS35275-63	<96906>	SCREW,MACHINE-CRES,..... FILLISTER HEAD,DRILLED HEAD,NO.10-24 NC,1/2 IN.LG		EA			*	*	*		*		
			5305-652-4483	MS15985-8-7	<96906>	SCREW,MACHINE-STEEL,WASHER...		EA			*	*	*		*		

(1) SOURCE, MAINT AND REC CODE (a) SOURCE CODE	(b) MAINT LEVEL	(c) REC CODE	(2) FEDERAL STOCK NUMBER	REFERENCE NUMBER	(3) DESCRIPTION	MODELS USABLE ON CH-34C	(4) UNIT OF ISSUE	(5) QTY INC IN UNIT PACK	(6) QTY INC IN UNIT	(7) 30-DAY DS/GS MAINT ALW (a) 1-20	(b) 21-50	(c) 51-100	(8) 1-YR ALWPER 100 EQUIP CNTGCY	(9) DEPOT MAINT ALWPER 100 EQUIP	(10) ILLUSTRATION (a) FIG NO	(b) ITEM NO
					CONTINUED										BULK	
					HEAD,NO.8-32 NC,7/16 IN.LG											
			5305-655-6556	MS35266-70 <96906>	SCREW,MACHINE-STEEL,CADMIUM.. PLATED,FILLISTER HEAD, DRILLED HEAD,NO.10-32 NF, 1-3/4 IN.LG		EA			*	*	*		*		
			5305-697-5616	RA5233 <51663>	SCREW,RELIEF.....		EA			*	*	*		*		
			5305-705-2388	MS24694S60 <96906>	SCREW,MACHINE-STEEL,CARBON,.. CADMIUM PLATED,FLAT COUNTERSUNK HEAD,RECESSED HEAD,NO.10-32 NF, 1-5/32 IN.LG		HD			*	*	*		*		
			5305-719-5400	MS24694S48 <96906>	SCREW,MACHINE-STEEL,FLAT..... COUNTERSUNK HEAD,RECESSED HEAD,NO.10-32 NF,13/32 IN. LG,7/64 IN.GRIP LG		EA			*	*	*		*		
			5305-719-5405	MS24694S56 <96906>	SCREW,MACHINE-STEEL ALLOY,... CADMIUM PLATED,FLAT COUNTERSUNK HEAD,RECESSED HEAD,NO.10-32 NF,29/32 IN. LG		HD			*	*	*		*		
			5305-720-8428	MS35266-73 <96906>	SCREW,MACHINE-STEEL,CARBON,.. FILLISTER HEAD,NO.10-32 NF, 2-1/2 IN.LG		EA			*	*	*		*		
			5305-753-7078	MS24621-31 <96906>	SCREW,TAPPING,THREAD..... FORMING-STEEL,PAN HEAD,DOG POINT,NO.8-18 THD,5/8 IN.LG		EA			*	*	*		*		
			5305-900-0598	MS24693S76 <96906>	SCREW,MACHINE-STEEL,CARBON,.. FLAT HEAD,RECESSED HEAD, NO.10-24 NC,1 IN.LG		HD			*	*	*		*		
			5305-901-3119	MS35492-118 <96906>	SCREW,WOOD-STEEL,FLAT..... COUNTERSUNK HEAD,RECESSED HEAD,0.268 IN.DIA,1.250 IN. LG		EA			*	*	*		*		
			5305-939-9188	MS35275-263 <96906>	SCREW,MACHINE-CRES,..... FILLISTER HEAD,DRILLED HEAD,NO.10-24 NC,1/2 IN.LG		EA			*	*	*		*		
			5305-952-7756	AN505-10R32 <88044>	SCREW,MACHINE-STEEL,CARBON,.. FLAT COUNTERSUNK HEAD, RECESSED HEAD,NO.10-24 NC, 2 IN.LG		EA			*	*	*		*		
			5305-954-4617	AN515DD416R16 <88044>	SCREW,MACHINE-ALUMINUM,RD.... HEAD,RECESSED HEAD, 1/4 IN.-20 NC,1 IN.LG		EA			*	*	*		*		
			5305-840-6694	MS24621-29 <96906>	SCREW,TAPPING,THREAD..... FORMING-STEEL,PAN HEAD, RECESSED HEAD,DOG POINT, NO.8-18 THD,0.375 IN.LG		HD			*	*	*		*		
			5305-954-8996	MS35214-59 <96906>	SCREW,MACHINE-BRASS,PAN..... HEAD,RECESSED HEAD,NO. 10-24 NC,1 IN.LG		EA			*	*	*		*		
			5305-957-6269	MS35190-275 <96906>	SCREW,MACHINE-STEEL,CARBON,..		EA			*	*	*		*		

(1) SOURCE, MAINT AND REC CODE (a) SOURCE CODE	(b) MAINT LEVEL	(c) REC CODE	(2) FEDERAL STOCK NUMBER	REFERENCE NUMBER	(3) DESCRIPTION	MODELS USABLE ON CH-34C	(4) UNIT OF ISSUE	(5) QTY INC IN UNIT PACK	(6) QTY INC IN UNIT	(7) 30-DAY DS GS MAINT ALW (a) 1-20	(b) 21-50	(c) 51-100	(8) 1-YR ALW PER 100 EQUIP CNTGCY	(9) DEPOT MAINT ALW PER 100 EQUIP	(10) ILLUSTRATION (a) FIG NO	(b) ITEM NO
					CONTINUED FLAT HEAD,RECESSED HEAD,NO. 10-24 NC,1 IN.LG										BULK	
			5305-958-1009	MS35219-55 <96906>	SCREW,MACHINE-ALUMINUM..... ALLOY,PAN HEAD,RECESSED HEAD,NO.10-32 NF,1/2 IN.LG		EA			*	*	*		*		
			5305-958-1012	MS35219-57 <96906>	SCREW,MACHINE-ALUMINUM..... ALLOY,PAN HEAD,RECESSED HEAD,NO.10-32 NF,3/4 IN.LG		HD			*	*	*		*		
			5305-958-1013	MS35219-58 <96906>	SCREW,MACHINE-ALUMINUM..... ALLOY,PAN HEAD,RECESSED HEAD,NO.10-32 NF,3/4 IN.LG		EA			*	*	*		*		
			5305-958-5473	MS35190-251 <96906>	SCREW,MACHINE-STEEL,CARBON,.. FLAT HEAD,RECESSED HEAD, NO.8-32 NC,3/8 IN.LG		EA			*	*	*		*		
			5305-958-5477	MS35190-254 <96906>	SCREW,MACHINE-STEEL,FLAT..... COUNTERSUNK HEAD,RECESSED HEAD,NO.8-32 NC,5/8 IN.LG		HD			*	*	*		*		
			5305-964-0780	MS35190-256 <96906>	SCREW,MACHINE-STEEL,CARBON,.. FLAT HEAD,RECESSED HEAD, NO.8-32 NC,7/8 IN.LG		HD			*	*	*		*		
			5305-964-9221	MS24693S294 <96906>	SCREW,MACHINE-STEEL,CADMIUM.. PLATED,FLAT HEAD,RECESSED HEAD,1/4 IN.-28 NF, 1/2 IN.LG		EA			*	*	*		*		
			5305-965-5879	MS24693S275 <96906>	SCREW,MACHINE-STEEL,CARBON,.. CADMIUM PLATED,FLAT COUNTERSUNK HEAD,RECESSED HEAD,NO.10-32 NF,7/8 IN.LG		EA			*	*	*		*		
			5305-984-6191	MS35206-243 <96906>	SCREW,MACHINE-STEEL,CARBON,.. PAN HEAD,RECESSED HEAD, NO.8-32 NC,3/8 IN.LG		HD			*	*	*		*		
			5305-984-6196	MS35206-248 <96906>	SCREW,MACHINE-STEEL,CARBON,.. PAN HEAD,RECESSED HEAD, NO.8-32 NC,7/8 IN.LG		GR			*	*	*		*		
			5305-984-6198	MS35206-250 <96906>	SCREW,MACHINE-STEEL,CARBON,.. PAN HEAD,RECESSED HEAD, NO.8-32 NC,1-1/4 IN.LG		EA			*	*	*		*		
			5305-984-6201	MS35206-253 <96906>	SCREW,MACHINE-STEEL,CARBON,.. PAN HEAD,RECESSED HEAD, NO.8-32 NC,2 IN.LG		HD			*	*	*		*		
			5305-984-7343	MS35191-276 <96906>	SCREW,MACHINE-STEEL,CARBON,.. FLAT COUNTERSUNK HEAD, RECESSED HEAD,NO.10-32 NF, 1 IN.LG		HD			*	*	*		*		
			5305-984-7357	MS35191-243 <96906>	SCREW,MACHINE-STEEL,CARBON... FLAT HEAD,COUNTERSUNK HEAD, RECESSED HEAD,NO.6-40 NF,1 IN.LG		GR			*	*	*		*		
			5305-989-7435	MS35207-264 <96906>	SCREW,MACHINE-STEEL,PAN..... HEAD,RECESSED HEAD,NO.10-32 NF,1/2 IN.LG		HD			*	*	*		*		

(1) SOURCE, MAINT AND REC CODE (a) SOURCE CODE	(b) MAINT LEVEL	(c) REC CODE	(2) FEDERAL STOCK NUMBER	REFERENCE NUMBER	(3) DESCRIPTION	MODELS USABLE ON CH-34C	(4) UNIT OF ISSUE	(5) QTY INC IN UNIT PACK	(6) QTY INC IN UNIT	(7) 30-DAY DS/GS MAINT ALW (a) 1-20	(b) 21-50	(c) 51-100	(8) 1-YR ALW PER 100 EQUIP CNTGCY	(9) DEPOT MAINT ALW PER 100 EQUIP	(10) ILLUSTRATION (a) FIG NO	(b) ITEM NO
			5305-990-1347	MS35190-292 <96906>	SCREW,MACHINE-STEEL,CARBON,.. FLAT,COUNTERSUNK HEAD, RECESSED HEAD,1/4 IN.-20 NC,1-1/4 IN.LG		HD			*	*	*		*	BULK	
			5305-990-6444	MS35207-261 <96906>	SCREW,MACHINE-STEEL,CARBON,.. PAN HEAD,RECESSED HEAD,NO.10-32 NF,3/8 IN.LG		HD							*		
			5305-995-3444	MS35207-266 <96906>	SCREW,MACHINE-STEEL,CARBON,.. PAN HEAD,RECESSED HEAD, NO.10-32 NF,7/8 IN.LG		HD			*	*	*		*		
			5306-141-4507	AN173H21A <88044>	BOLT,MACHINE-STEEL,HEX..... HEAD,DRILLED HEAD,CLOSE TOLERANCE,NO.10-32 NF, 2-5/32 IN.LG		EA			*	*	*		*		
			5306-141-4517	AN174H5A <88044>	BOLT,MACHINE-STEEL,HEX..... HEAD,DRILLED HEAD,1/4 IN.-28 NF,21/32 IN.LG		EA			*	*	*		*		
			5306-141-4788	NAS464-4A19 <80205>	BOLT,SHEAR-STEEL,HEX HEAD,... 1/4 IN.-28 NF,1-17/32 IN. LG		EA			*	*	*		*		
			5306-144-3856	AN25-20 <88044>	BOLT,CLEVIS-STEEL,BUTTON..... HEAD,DRILLED SHANK,5/16 IN.-24 NF,1-19/64 IN.LG		EA			*	*	*		*		
			5306-144-3868	AN25-32 <88044>	BOLT,CLEVIS-STEEL,BUTTON..... HEAD,5/16 IN.-24 NF,2-3/64 IN.LG		EA			*	*	*		*		
			5306-144-3870	AN25-36 <88044>	BOLT,CLEVIS-STEEL,BUTTON..... HEAD,DRILLED SHANK,5/16 IN.-24 NF,23/64 IN.LG		EA			*	*	*		*		
			5306-144-4073	AN24-27A <88044>	BOLT,CLEVIS-STEEL,BUTTON..... HEAD,1/4 IN.-28 NF,1-23/32 IN.LG		EA			*	*	*		*		
			5306-150-9081	AN173H6 <88044>	BOLT,MACHINE-STEEL,HEX..... HEAD,DRILLED HEAD & SHANK, CLOSE TOLERANCE,NO.10-32 NF,25/32 IN.LG		EA			*	*	*		*		
			5306-150-9285	MS20073-05-24 <96906>	BOLT,MACHINE-STEEL,HEX HEAD,. DRILLED HEAD,5/16 IN.-24 NF,2.547 IN.LG		EA			*	*	*		*		
			5306-150-9550	MS20074-06-05 <96906>	BOLT,MACHINE-STEEL,HEX HEAD,. DRILLED HEAD,3/8 IN.-16 NC, 0.734 IN.LG		EA			*	*	*		*		
			5306-150-9838	AN174H30A <88044>	BOLT,MACHINE-STEEL,HEX HEAD,. DRILLED HEAD,CLOSE TOLERANCE,1/4 IN.-28 NF,3-1/32 IN.LG		EA			*	*	*		*		
			5306-150-9848	AN174H42A <88044>	BOLT,MACHINE-STEEL,HEX..... HEAD,DRILLED HEAD,CLOSE TOLERANCE,1/4 IN.-28 NF, 4-9/32 IN.LG		EA			*	*	*		*		
			5306-150-9918	AN23-29A <88044>	BOLT,CLEVIS-STEEL,BUTTON..... HEAD,NO.10-32 NF,1-27/32		EA			*	*	*		*		

(1) SOURCE, MAINT AND REC CODE (a) SOURCE CODE	(b) MAINT LEVEL	(c) RECOVERY CODE	(2) FEDERAL STOCK NUMBER	REFERENCE NUMBER	(3) DESCRIPTION	MODELS USABLE ON CH-34C	(4) UNIT OF ISSUE	(5) QTY INC IN UNIT PACK	(6) QTY INC IN UNIT	(7) 30-DAY DS/GS MAINT ALW (a) 1-20	(b) 21-50	(c) 51-100	(8) 1-YR ALW PER 100 EQUIP CNTGCY	(9) DEPOT MAINT ALW PER 100 EQUIP	(10) ILLUSTRATION (a) FIG NO	(b) ITEM NO
					CONTINUED										BULK	
					IN.LG											
			5306-150-9956	AN177H37 <88044>	BOLT,MACHINE-STEEL,HEX..... HEAD,DRILLED HEAD & SHANK, CLOSE TOLERANCE,7/16 IN.-20 NF,3-31/32 IN.LG		EA			*	*	*		*		
			5306-151-0332	AN174H20 <88044>	BOLT,MACHINE-STEEL,HEX..... HEAD,DRILLED HEAD & SHANK, CLOSE TOLERANCE,1/4 IN.-28 NF,21/32 IN.LG		EA			*	*	*		*		
			5306-151-0526	AN24-24 <88044>	BOLT,CLEVIS-STEEL,BUTTON..... HEAD,1/4 IN.-28 NF, 1-17/32 IN.LG		EA			*	*	*		*		
			5306-151-1058	AN175H6 <88044>	BOLT,MACHINE-STEEL,HEX..... HEAD,DRILLED HEAD & SHANK, CLOSE TOLERANCE,5/16 IN.-24 NF,27/32 IN.LG		EA			*	*	*		*		
			5306-151-1193	AN175H47 <88044>	BOLT,MACHINE-STEEL,HEX..... HEAD,DRILLED HEAD & SHANK, 4-31/32 IN.LG		EA			*	*	*		*		
			5306-151-1194	AN175H50 <88044>	BOLT,MACHINE-STEEL,HEX..... HEAD,DRILLED HEAD & SHANK, 5/16 IN.-24 NF,5-3/32 IN.LG		EA			*	*	*		*		
			5306-151-1523	AN176H14 <88044>	BOLT,MACHINE-STEEL,HEX..... HEAD,DRILLED HEAD & SHANK, 3/8 IN.-24 NF,1-37/64 IN.LG OF SHANK		EA			*	*	*		*		
			5306-151-1530	AN176H11 <88044>	BOLT,MACHINE-STEEL,HEX..... HEAD,DRILLED HEAD & SHANK 3/8 IN.-24 NF,1-13/64 IN.LG		EA			*	*	*		*		
			5306-151-1969	AN23-17 <88044>	BOLT,CLEVIS-STEEL,BUTTON..... HEAD,NO.10-32 NF,1-3/32 IN.LG		EA			*	*	*		*		
			5306-151-1970	AN23-18 <88044>	BOLT,CLEVIS-STEEL,BUTTON..... HEAD,DRILLED SHANK,NO. 10-32 NF,1-5/32 IN.LG		EA			*	*	*		*		
			5306-151-2527	MS20073-08-11 <96906>	BOLT,MACHINE-STEEL,HEX HEAD,. DRILLED HEAD,1/2 IN.-20 NF, 1.172 IN.LG		EA			*	*	*		*		
			5306-151-2531	MS20073-08-10 <96906>	BOLT,MACHINE-STEEL,HEX..... HEAD,DRILLED HEAD,1/2 IN.-20 NF,1-3/64 IN.LG		EA			*	*	*		*		
			5306-151-3087	AN178H27 <88044>	BOLT,MACHINE-STEEL,HEX..... HEAD,DRILLED HEAD & SHANK, 1/2 IN.-20 NF,2-31/32 IN.LG		EA			*	*	*		*		
			5306-151-3088	AN178H26 <88044>	BOLT,MACHINE-STEEL,HEX..... HEAD,DRILLED HEAD AND SHANK,CLOSE TOLERANCE,1/2 IN.-20 NF,2-27/32 IN.LG		EA			*	*	*		*		
			5306-151-3091	AN178H23 <88044>	BOLT,MACHINE-STEEL,HEX..... HEAD,DRILLED HEAD & SHANK, 1/2 IN.-20 NF,2-15/32 IN.LG		EA			*	*	*		*		

(1) SOURCE, MAINT AND REC CODE (a) SOURCE CODE	(b) MAINT LEVEL	(c) REC CODE	(2) FEDERAL STOCK NUMBER	(3) DESCRIPTION REFERENCE NUMBER			MODELS USABLE ON CH-34C	(4) UNIT OF ISSUE	(5) QTY INC IN UNIT PACK	(6) QTY INC IN UNIT	(7) 30-DAY DS/GS MAINT ALW (a) 1-20	(b) 21-50	(c) 51-100	(8) 1-YR ALW PER 100 EQUIP CNTGCY	(9) DEPOT MAINT ALW PER 100 EQUIP	(10) ILLUSTRATION (a) FIG NO	(b) ITEM NO
			5306-151-3092	AN178H22	<88044>	BOLT,MACHINE-STEEL,HEX..... HEAD,DRILLED HEAD & SHANK, 1/2 IN.-20 NF,11/32 IN.LG,		EA			*	*	*		*	BULK	
			5306-151-3094	AN178H17	<88044>	BOLT,MACHINE-STEEL,HEX..... HEAD,DRILLED HEAD & SHANK, 1/2 IN.-20 NF,1-31/32 IN.LG		EA			*	*	*		*		
			5306-151-3539	AN25-28A	<88044>	BOLT,CLEVIS-STEEL,BUTTON..... HEAD,5/16 IN.-24 NF,5/16 IN.-24 NF,1-51/64 IN.LG		EA			*	*	*		*		
			5306-151-3542	AN25-32A	<88044>	BOLT,CLEVIS-STEEL,5/16..... IN.-24 NF,2-3/64 IN.LG, 1-11/16 IN.GRIP LG		EA			*	*	*		*		
			5306-156-2297	AN24-50A	<88044>	BOLT,CLEVIS-STEEL,BUTTON..... HEAD,1/4 IN.-28 NF,3-5/32 IN.LG		EA			*	*	*		*		
			5306-156-2389	AN24-34A	<88044>	BOLT,CLEVIS-STEEL,BUTTON..... HEAD,1/4 -28 NF,2-5/32 IN. LG		EA			*	*	*		*		
			5306-156-2392	AN24-10A	<88044>	BOLT,CLEVIS-STEEL,BUTTON..... HEAD,1/4 IN.-28 NF,21/32 IN.LG		EA			*	*	*		*		
			5306-156-2537	AN174H12A	<88044>	BOLT,MACHINE-STEEL,HEX..... HEAD,DRILLED HEAD,1/4 IN.-28 NF,1-9/32 IN.LG		EA			*	*	*		*		
			5306-174-4105	AN178H15	<88044>	BOLT,MACHINE-STEEL,HEX HEAD,. DRILLED HEAD & SHANK,1/2 IN.-20 NF,1-23/32 IN.LG		EA			*	*	*		*		
			5306-174-4120	AN176H26	<88044>	BOLT,MACHINE-STEEL,HEX..... HEAD,DRILLED HEAD & SHANK, 3/8 IN.-24 NF,2-3/16 IN.LG		EA			*	*	*		*		
			5306-180-2708	AN4H25	<88044>	BOLT,MACHINE-STEEL,HEX..... HEAD,DRILLED HEAD & SHANK, 1/4 IN.-28 NF,2-21/32 IN.LG		EA			*	*	*		*		
			5306-180-2717	AN5H22	<88044>	BOLT,MACHINE-STEEL,HEX..... HEAD,DRILLED HEAD & SHANK, 5/16 IN.-24 NF,2-11/32 IN. LG		EA			*	*	*		*		
			5306-180-2723	AN5H30	<88044>	BOLT,MACHINE-STEEL,HEX..... HEAD,DRILLED HEAD & SHANK, 5/16 IN.-24 NF,3-3/32 IN.LG		LL			*	*	*		*		
			5306-180-2748	AN5H7	<88044>	BOLT,MACHINE-STEEL,HEX..... HEAD,DRILLED HEAD & SHANK, 5/16 IN.-24 NF,31/32 IN.LG		HD			*	*	*		*		
			5306-180-2757	AN5H20	<88044>	BOLT,MACHINE-STEEL,HEX..... HEAD,DRILLED HEAD & SHANK, 5/16 IN.-24 NF,2-3/32 IN.LG		HD			*	*	*		*		
			5306-180-2770	AN3CH12A	<88044>	BOLT,MACHINE-CRES,HEX HEAD,.. DRILLED HEAD,NO.10-32 NF, 1-9/32 IN.LG		EA			*	*	*		*		
			5306-180-3347	AN4CH10	<88044>	BOLT,MACHINE-CRES,HEX HEAD,.. DRILLED HEAD & SHANK,1/4		EA			*	*	*		*		

(1) SOURCE, MAINT AND REC CODE (a) SOURCE CODE	(b) MAINT LEVEL	(c) REC CODE	(2) FEDERAL STOCK NUMBER	REFERENCE NUMBER	(3) DESCRIPTION	MODELS USABLE ON CH-34C	(4) UNIT OF ISSUE	(5) QTY INC IN UNIT PACK	(6) QTY INC IN UNIT	(7) 30-DAY DS/GS MAINT ALW (a) 1-20	(b) 21-50	(c) 51-100	(8) 1-YR ALW PER 100 EQUIP CNTGCY	(9) DEPOT MAINT ALW PER 100 EQUIP	(10) ILLUSTRATION (a) FIG NO	(b) ITEM NO
					CONTINUED										BULK	
					IN.-28 NF,1-1/32 IN.LG											
			5306-180-3348	AN4CH11 <88044>	BOLT,MACHINE-CRES,HEX HEAD,.. DRILLED HEAD & SHANK, 1/4 IN.-28 NF,1-5/32 IN.LG		EA			*	*	*		*		
			5306-182-1530	AN4H12 <88044>	BOLT,MACHINE-STEEL,HEX..... HEAD,DRILLED HEAD & SHANK, 1/4 IN.-28 NF,1-9/32 IN.LG		HD			*	*	*		*		
			5306-182-1863	AN4CH16A <88044>	BOLT,MACHINE-CRES,HEX HEAD,.. DRILLED HEAD,1/4 IN.-28 NF, 1-25/32 IN.LG		EA			*	*	*		*		
			5306-182-1864	AN4CH17A <88044>	BOLT,MACHINE-CRES,HEX HEAD,.. DRILLED HEAD,1/4 IN.-28 NF, 1-29/32 IN.LG		EA			*	*	*		*		
			5306-182-1866	AN4CH21A <88044>	BOLT,MACHINE-CRES,HEX HEAD... DRILLED HEAD,1/4 IN.-28 NF, 2-5/32 IN.LG		EA			*	*	*		*		
			5306-182-1920	AN3H21 <88044>	BOLT,MACHINE-STEEL,HEX..... HEAD,DRILLED HEAD & SHANK, NO.10-32 NF,2-5/32 IN.LG		EA			*	*	*		*		
			5306-182-2058	AN3H5A <88044>	BOLT,MACHINE-STEEL,HEX HEAD,. DRILLED HEAD,NO.10-32 NF, 21/32 IN.LG		EA			*	*	*		*		
			5306-206-0847	MS20004-18 <96906>	BOLT,INTERNAL WRENCHING..... STEEL ALLOY,BEVEL HEAD, DRILLED HEAD,1/4 IN.-28 NF, 1.625 IN.LG		EA			*	*	*		*		
			5306-206-3871	AN44-11 <88044>	BOLT,EYE-STEEL,DRILLED..... SHANK,5/16 IN.-24 NF,1-7/32 IN.LG		EA			*	*	*		*		
			5306-206-6381	NAS464-5-47 <80205>	BOLT,SHEAR-STEEL,HEX HEAD,... DRILLED & SHANK,5/16 IN.-24 NF,3-19/64 IN.LG		EA			*	*	*		*		
			5306-206-9248	100711A <64560>	BOLT,MACHINE-STEEL,HEX..... HEAD,DRILLED HEAD NO.10-24 NC,5/8 IN.LG		EA			*	*	*		*		
			5306-207-0980	NAS464-5-25 <80205>	BOLT,SHEAR-STEEL,HEX HEAD,... DRILLED SHANK,5/16 IN.-24 NF,1-59/64 IN.LG		EA			*	*	*		*		
			5306-207-4594	NAS428H4-6 <80205>	BOLT,MACHINE-STEEL,HEX HEAD,. DRILLED HEAD,1/4 IN.-28 NF, 3/4 IN.LG		EA			*	*	*		*		
			5306-207-8130	NAS464-4-13 <80205>	BOLT,SHEAR-STEEL,HEX HEAD,... DRILLED SHANK,CLOSE TOLERANCE,1/4 IN.-28 NF, 1-5/32 IN.LG		EA			*	*	*		*		
			5306-208-6401	NAS464-5-13 <80205>	BOLT,SHEAR-STEEL,HEX HEAD,... DRILLED SHANK,5/16 IN.-24 NF,1-11/64 IN.LG		EA			*	*	*		*		
			5306-260-7573	AN42-7 <88044>	BOLT,EYE-STEEL,DRILLED..... SHANK,NO.10-32 NF,29/32 IN. LG		EA			*	*	*		*		

(1) SOURCE, MAINT AND REC CODE (a) SOURCE CODE	(b) MAINT LEVEL	(c) REC CODE	(2) FEDERAL STOCK NUMBER	(3) DESCRIPTION REFERENCE NUMBER			MODELS USABLE ON CH-34C	(4) UNIT OF ISSUE	(5) QTY INC IN UNIT PACK	(6) QTY INC IN UNIT	(7) 30-DAY DS/GS MAINT ALW (a) 1-20	(b) 21-50	(c) 51-100	(8) 1-YR ALW PER 100 EQUIP CNTGCY	(9) DEPOT MAINT ALW PER 100 EQUIP	(10) ILLUSTRATION (a) FIG NO	(b) ITEM NO
			5306-260-7580	AN43-7	<88044>	BOLT,EYE-STEEL,1/4 IN.-28.... NF,1-11/16 IN.LG		EA			*	*	*		*	BULK	
			5306-260-7581	AN43B10	<88044>	BOLT,EYE-STEEL,1/4 IN.-28.... NF,1-1/32 IN.LG		EA			*	*	*		*		
			5306-269-6865	AN101230	<88044>	BOLT,MACHINE-STEEL,HEX..... HEAD,5/16 IN.-24 NF,2-1/2 IN.LG		EA			*	*	*		*		
			5306-275-9528	AN175H13	<88044>	BOLT,MACHINE-STEEL,HEX..... HEAD,DRILLED HEAD & SHANK, 5/16 IN.-24 NF,1-15/32 IN. LG		EA			*	*	*		*		
			5306-275-9562	AN175H21	<88044>	BOLT,MACHINE-STEEL,HEX..... HEAD,DRILLED HEAD & SHANK, CLOSE TOLERANCE,5/16 IN.-24 NF,2-7/32 IN.LG		EA			*	*	*		*		
			5306-275-9696	AN3DDH6	<88044>	BOLT,MACHINE-ALUMINUM..... ALLOY,HEX HEAD,DRILLED HEAD & SHANK,NO.10-32 NF,25/32 IN. LG		EA			*	*	*		*		
			5306-281-9997	AN6H24	<88044>	BOLT,MACHINE-STEEL,HEX..... HEAD,DRILLED HEAD & SHANK, 3/8 IN.-24 NF,2-37/64 IN.LG		EA			*	*	*		*		
			5306-282-4310	AN3H6	<88044>	BOLT,MACHINE-STEEL,HEX..... HEAD,DRILLED HEAD & SHANK, NO.10-32 NF,25/32 IN.LG		HD			*	*	*		*		
			5306-282-4313	AN3CH3	<88044>	BOLT,MACHINE-CRES,HEX HEAD,.. DRILLED HEAD AND SHANK,NO. 10-32 NF,15/32 IN.LG		EA			*	*	*		*		
			5306-282-5821	AN3H26A	<88044>	BOLT,MACHINE-STEEL,HEX..... HEAD,DRILLED HEAD,NO.10-32 NF,2-25/32 IN.LG		HD			*	*	*		*		
			5306-282-5822	AN6H21	<88044>	BOLT,MACHINE-STEEL,HEX..... HEAD,DRILLED HEAD & SHANK, 3/8 IN.-24 NF,2-13/64 IN.LG		LL			*	*	*		*		
			5306-282-5842	AN3H25A	<88044>	BOLT,MACHINE-STEEL,HEX..... HEAD,NO.10-32 NF,2-21/32 IN.LG		HD			*	*	*		*		
			5306-282-8802	NAS464-7-16	<80205>	BOLT,SHEAR-STEEL,HEX HEAD,... DRILLED SHANK,CLOSE TOLERANCE,7/16 IN.-20 NF, 1-27/64 IN.LG		EA							*		
			5306-285-7528	NAS464-3A10	<80205>	BOLT,SHEAR-STEEL,HEX HEAD,... CLOSE TOLERANCE,NO.10-32 NF,31/32 IN.LG		EA			*	*	*		*		
			5306-285-7529	NAS464-3A9	<80205>	BOLT,SHEAR-STEEL,HEX HEAD,... CLOSE TOLERANCE,NO.10-32 NF,29/32 IN.LG		EA			*	*	*		*		
			5306-286-1458	NAS464-7-14	<80205>	BOLT,SHEAR-STEEL,HEX HEAD,... CLOSE TOLERANCE,7/16 IN.-20 NF,1-19/64 IN.LG		EA			*	*	*		*		
			5306-286-1462	NAS464-3A4	<80205>	BOLT,SHEAR-STEEL,HEX HEAD.... NO.10-32 NF,19-/2 IN.LG		EA			*	*	*		*		

(1) SOURCE, MAINT AND REC CODE (a) SOURCE CODE	(b) MAINT LEVEL	(c) REC CODE	(2) FEDERAL STOCK NUMBER	(3) DESCRIPTION REFERENCE NUMBER			MODELS USABLE ON CH-34C	(4) UNIT OF ISSUE	(5) QTY INC IN UNIT PACK	(6) QTY INC IN UNIT	(7) 30-DAY DS, GS MAINT ALW (a) 1-20	(b) 21-50	(c) 51-100	(8) 1-YR ALW PER 100 EQUIP CNTGCY	(9) DEPOT MAINT ALW PER 100 EQUIP	(10) ILLUSTRATION (a) FIG NO	(b) ITEM NO
			5306-286-1463	NAS464-3A6	<80205>	BOLT,SHEAR-STEEL,HEX HEAD,... NO.10-32 NF,23/32 IN.LG		EA			*	*	*		*	BULK	
			5306-286-1469	NAS464-3A5	<80205>	BOLT,SHEAR-STEEL,HEX HEAD,... NO.10-32 NF,21/32 IN.LG		EA			*	*	*		*		
			5306-286-3319	NAS428H4-12	<80205>	BOLT,MACHINE-STEEL,CROWNED... HEX HEAD,DRILLED HEAD, 1/4 IN.-28 NF,1-1/4 IN.LG		EA			*	*	*		*		
			5306-292-5106	NAS464-5-41	<80205>	BOLT,SHEAR-STEEL,HEX HEAD,... DRILLED SHANK,CLOSE TOLERANCE,5/16 IN.-24 NF, 2-59/64 IN.LG		EA			*	*	*		*		
			5306-292-6465	NAS464-6-45	<80205>	BOLT,SHEAR-STEEL,HEX HEAD,... DRILLED SHANK,3/8 IN.-24 NF,2-13/16 IN.LG		EA			*	*	*		*		
			5306-292-6466	NAS464-4-19	<80205>	BOLT,SHEAR-STEEL,HEX HEAD,... DRILLED SHANK,1/4 IN. -28 NF,1-17/32 IN. LG		EA			*	*	*		*		
			5306-292-8275	AN173H12A	<88044>	BOLT,MACHINE-STEEL,HEX..... HEAD,DRILLED HEAD,NO.10-32 NF,1-9/32 IN.LG		EA			*	*	*		*		
			5306-292-8280	AN173H5A	<88044>	BOLT,MACHINE-STEEL,HEX..... HEAD,DRILLED HEAD,NO.10-32 NF,21/32 IN.LG		HD			*	*	*		*		
			5306-550-9134	AN3DDH13A	<88044>	BOLT,MACHINE-ALUMINUM..... ALLOY,HEX HEAD,DRILLED HEAD,NO.10-32 NF,1-13/32 IN.LG		EA			*	*	*		*		
			5306-558-9447	AN4DDH10A	<88044>	BOLT,MACHINE-ALUMINUM..... ALLOY,HEX HEAD,DRILLED HEAD,1/4 IN.-28 NF,1-1/32 IN.LG		EA			*	*	*		*		
			5306-558-9459	AN4H52A	<88044>	BOLT,MACHINE-STEEL,HEX..... HEAD,DRILLED HEAD,1/4 IN.-28 NF,5-9/32 IN.LG		EA			*	*	*		*		
			5306-559-8140	AN3H44A	<88044>	BOLT,MACHINE-STEEL,HEX..... HEAD,DRILLED HEAD,NO.10-32 NF,4-17/32 IN.LG		EA			*	*	*		*		
			5306-576-1897	AN5DDH7	<88044>	BOLT,MACHINE-ALUMINUM..... ALLOY,HEX HEAD,DRILLED HEAD & SHANK,5/16 IN.-24 NF,31/32 IN.LG		EA			*	*	*		*		
			5306-576-1898	AN6DDH11	<88044>	BOLT,MACHINE-ALUMINUM..... ALLOY,HEX HEAD,DRILLED HEAD & SHANK,3/8 IN.-24 NF,1-13/64 IN.LG		EA			*	*	*		*		
			5306-576-1899	AN6DDH12	<88044>	BOLT,MACHINE-ALUMINUM..... ALLOY,HEX HEAD,DRILLED HEAD & SHANK,3/8 IN.-24 NF,1-21/64 IN.LG		EA			*	*	*		*		
			5306-576-1953	AN8H25	<88044>	BOLT,MACHINE-STEEL,HEX..... HEAD,DRILLED HEAD & SHANK, 1/2 IN.-20 NF,25/32 IN.LG		EA			*	*	*		*		

(1) SOURCE, MAINT AND REC CODE (a) SOURCE CODE	(b) MAINT LEVEL	(c) REC CODE	(2) FEDERAL STOCK NUMBER	REFERENCE NUMBER	(3) DESCRIPTION	MODELS USABLE IN CH-34C	(4) UNIT OF ISSUE	(5) QTY INC IN UNIT PACK	(6) QTY INC IN UNIT	(7) 30-DAY DS/GS MAINT ALW (a) 1-20	(b) 21-50	(c) 51-100	(8) 1-YR ALW PER 100 EQUIP CNTGCY	(9) DEPOT MAINT ALW PER 100 EQUIP	(10) ILLUSTRATION (a) FIG NO	(b) ITEM NO
			5306-576-1962	AN5DDH4 <88044>	BOLT,MACHINE-ALUMINUM..... ALLOY,HEX HEAD,DRILLED HEAD & SHANK,5/16 IN.-24 NF,19/32 IN.LG		EA			*	*	*		*	BULK	
			5306-579-0205	AN3H40 <88044>	BOLT,MACHINE-STEEL,HEX..... HEAD,DRILLED HEAD & SHANK, NO.10-32 NF,4-1/32 IN.LG		EA			*	*	*		*		
			5306-582-5752	AN4DDH36A <88044>	BOLT,MACHINE-ALUMINUM..... ALLOY,HEX HEAD,DRILLED HEAD,1/4 IN.-28 NF,3-25/32 IN.LG		EA			*	*	*		*		
			5306-584-5086	AN178H64 <88044>	BOLT,MACHINE-STEEL,HEX..... HEAD,DRILLED HEAD & SHANK, 1/2 IN.-20 NF,6-19/32 IN.LG		EA			*	*	*		*		
			5306-584-5325	MS20005H15 <96906>	BOLT,INTERNAL WRENCHING..... STEEL,BEVEL HEAD,DRILLED HEAD,5/16 IN.-24 NF,1.500 IN.LG		EA			*	*	*		*		
			5306-620-8294	MS20073-04-05 <96906>	BOLT,MACHINE-STEEL,HEX HEAD,. DRILLED HEAD,1/4 IN.-28 NF, 0.656 IN.LG		HD							*		
			5306-630-2089	AN177H34 <88044>	BOLT,MACHINE-STEEL,HEX..... HEAD,DRILLED HEAD & SHANK, 7/16 IN. -20 NF,3-19/32 IN. LG		EA			*	*	*		*		
			5306-630-2099	AN7H31 <88044>	BOLT,MACHINE-STEEL,HEX..... HEAD,DRILLED HEAD & SHANK, 7/16 IN.-20 NF,3-7/32 IN.LG		EA			*	*	*		*		
			5306-637-1665	AN24-17 <88044>	BOLT,CLEVIS-STEEL,BUTTON..... HEAD,DRILLED SHANK,1/4 IN.-28 NF,1-3/32 IN.LG		HD			*	*	*		*		
			5306-638-2217	AN42B5 <88044>	BOLT,EYE-STEEL,NO.10-32 NF,.. 21/32 IN.LG		EA			*	*	*		*		
			5306-638-4278	NAS464-8-20 <80205>	BOLT,SHEAR-STEEL,HEX HEAD,... DRILLED SHANK,1/2 IN.-20 NF,1-43/64 IN.LG		EA			*	*	*		*		
			5306-638-4279	NAS464-8-24 <80205>	BOLT,SHEAR-STEEL,HEX HEAD,... DRILLED SHANK,1/2 IN.-20 NF,1-59/64 IN.LG		EA			*	*	*		*		
			5306-638-4834	AN6H11 <88044>	BOLT,MACHINE-STEEL,HEX..... HEAD,DRILLED HEAD & SHANK, 3/8 IN.-24 NF,1-13/64 IN.LG		EA			*	*	*		*		
			5306-638-5075	AN174H50A <88044>	BOLT,MACHINE-STEEL,HEX..... HEAD,DRILLED HEAD,CLOSE TOLERANCE,1/4 IN.-28 NF, 5-1/16 IN.LG		EA			*	*	*		*		
			5306-638-5914	NAS464P4-20 <80205>	BOLT,SHEAR-STEEL,HEX HEAD,... DRILLED HEAD,1/4 IN.-28 NF, 1-19/32 IN.LG		EA			*	*	*		*		
			5306-638-8223	AN4H16 <88044>	BOLT,MACHINE-STEEL,HEX HEAD,. DRILLED HEAD AND SHANK, 1/4 IN. -28 NF,1-25/32 IN. LG		HD			*	*	*		*		

(1) SOURCE, MAINT AND REC CODE (a) SOURCE CODE	(b) MAINT LEVEL	(c) REC CODE	(2) FEDERAL STOCK NUMBER	REFERENCE NUMBER		(3) DESCRIPTION	MODELS USABLE ON CH-34C	(4) UNIT OF ISSUE	(5) QTY INC IN UNIT PACK	(6) QTY INC IN UNIT	(7) 30-DAY DS GS MAINT ALW (a) 1-20	(b) 21-50	(c) 51-100	(8) 1-YR ALW PER 100 EQUIP CNTGCY	(9) DEPOT MAINT ALW PER 100 EQUIP	(10) ILLUSTRATION (a) FIG NO	(b) ITEM NO
			5306-639-1456	NAS464-7-50	<80205>	BOLT,SHEAR-STEEL,HEX HEAD,... DRILLED SHANK,7/16 IN. -20 NF,3-11/32 IN. LG		EA			*	*	*		*	BULK	
			5306-639-1774	MS20004H10	<96906>	BOLT,INTERNAL WRENCHING..... STEEL ALLOY,BEVEL HEAD, DRILLED HEAD,1/4 IN.-28 NF, 1.125 IN.LG		EA			*	*	*		*		
			5306-639-1845	AN5H25	<88044>	BOLT,MACHINE-STEEL,HEX..... HEAD,DRILLED HEAD & SHANK, 5/16 IN.-24 NF,2-23/32 IN.LG		EA			*	*	*		*		
			5306-639-2347	AN5DDH6	<88044>	BOLT,MACHINE-ALUMINUM..... ALLOY,HEX HEAD,DRILLED HEAD AND SHANK,5/16 IN.-24 NF, 27/32 IN.LG		EA			*	*	*		*		
			5306-754-1787	MS20074-03-03	<96906>	BOLT,MACHINE-STEEL,HEX..... HEAD,DRILLED HEAD,NO.10-24 NC,0.469 IN.LG		EA			*	*	*		*		
			5306-846-4772	NAS144ADH18	<80205>	BOLT,INTERNAL WRENCHING..... STEEL ALLOY,PAN HEAD, DRILLED HEAD & SHANK,1/4 IN.-28 NF,1-1/8 IN.LG		EA			*	*	*		*		
			5306-851-5166	NAS627-48	<80205>	BOLT,MACHINE-STEEL,HEX HEAD,. 7/16 IN.-20 NF 3.694 IN.LG		EA			*	*	*		*		
			5307-206-9706	AN125991	<88044>	STUD,PLAIN-STEEL,1/4 IN.-20.. NS,1/4 IN.-28 NF,1-5/16 IN. LG,0.009 IN.OVERSIZE		EA			*	*	*		*		
			5307-208-0629	2138S110	<80044>	STUD,STEPPED-STEEL,3/8..... IN.-24 NF,7/16 IN.-14 NC,2 IN.LG		EA			*	*	*		*		
			5307-208-0631	2145H125	<66640>	STUD,STEPPED.....		EA			*	*	*		*		
			5307-637-7544	SF101-9SA9A	<83324>	STUD,LOCKED IN-STEEL,..... CADMIUM PLATED,1/4 IN.-28 NF,5/16 IN.-18 NC,1-1/8 IN. LG		EA							*		
			5307-877-4893	NAS354-5-300	<80205>	STUD,PLAIN-STEEL,5/16 IN.-24. NF,BOTH ENDS,3 IN.LG		EA			*	*	*		*		
			5310-052-9732	MS21044E3	<96906>	NUT,SELF-LOCKING,HEXAGON..... COPPER,NO.10-32 NF,W/NYLON INSERT		EA			*	*	*		*		
			5310-061-1803	MS27130-12	<96906>	NUT,BLIND RIVET-ALUMINUM..... ALLOY,FLAT HEAD,NO.6-32 NC, 0.532 IN.LG		EA			*	*	*		*		
			5310-062-4954	MS21045-8	<96906>	NUT,SELF-LOCKING,HEXAGON..... STEEL,1/2 IN.-20 NF		HD			*	*	*		*		
			5310-063-6716	MS35426-14	<96906>	NUT,PLAIN,WING-STEEL..... CARBON,1/4 IN.-28 NF		EA			*	*	*		*		
			5310-063-6717	MS35426-15	<96906>	NUT,PLAIN,WING-STEEL,5/16.... IN.-24 NF		EA			*	*	*		*		
			5310-141-1795	AN960-416	<88044>	WASHER,FLAT-STEEL,CARBON..... 0.265 IN.ID,0.500 IN.OD,		HD			*	*	*		*		

(1) SOURCE, MAINT AND REC CODE (a) SOURCE CODE	(b) MAINT LEVEL	(c) REC CODE	(2) FEDERAL STOCK NUMBER	REFERENCE NUMBER	(3) DESCRIPTION	MODELS USABLE ON CH-34C	(4) UNIT OF ISSUE	(5) QTY INC IN UNIT PACK	(6) QTY INC IN UNIT	(7) 30-DAY DS/GS MAINT ALW (a) 1-20	(b) 21-50	(c) 51-100	(8) 1-YR ALW PER 100 EQUIP CNTGCY	(9) DEPOT MAINT ALW PER 100 EQUIP	(10) ILLUSTRATION (a) FIG NO	(b) ITEM NO
					CONTINUED 0.063 IN.THK,1/4 IN.THD SIZE										BULK	
			5310-141-1823	A1932-8Z1 <78553>	NUT,SHEET SPRING-STEEL,NO.... 8 SCREW,0.500 IN.W,0.593 IN.LG,0.025 IN.THK		EA			*	*	*		*		
			5310-141-3004	AN150433 <88044>	NUT,SLOTTED HEXAGON-STEEL,... 1/4 IN.-28 NF		EA							*		
			5310-148-8832	124D95 <80044>	NUT,CONE SEAT,HEXAGON..... STEEL,1/4 IN.-28 NF		EA			*	*	*		*		
			5310-149-9119	MS20002C12 <96906>	WASHER,RECESSED-STEEL,0.770.. IN.ID,1.250 IN.OD,0.078 IN.THK		HD			*	*	*		*		
			5310-149-9130	NAS143-6 <80205>	WASHER,FLAT-STEEL,0.378 IN... ID,0.687 IN.OD,0.062 IN.THK		HD			*	*	*		*		
			5310-167-0667	MS35337-44 <96906>	WASHER,LOCK-STEEL,0.201 IN... ID,0.489 IN.OD,0.047 IN.THK		HD			*	*	*		*		
			5310-167-0805	AN960C716 <88044>	WASHER,FLAT-CRES,0.453 IN.... ID,0.750 IN.OD,0.064 IN.THK		HD			*	*	*		*		
			5310-167-0806	AN960C816 <88044>	WASHER,FLAT-STEEL,1/2 IN..... ID,7/8 IN.OD,0.064 IN.THK		HD			*	*	*		*		
			5310-167-0807	AN960C916 <88044>	WASHER,FLAT-CRES,0.578 IN.... ID,1.082 IN.OD,0.064 IN.THK		HD			*	*	*		*		
			5310-167-0825	AN960-1016 <88044>	WASHER,FLAT-STEEL,CARBON,.... 0.640 IN.ID,1.188 IN.OD, 0.063 IN.THK		HD							*		
			5310-167-0827	AN960-1416 <88044>	WASHER,FLAT-STEEL,CARBON,.... 0.890 IN.ID,1.500 IN.OD, 0.090 IN.THK		LL			*	*	*		*		
			5310-167-0828	AN960-1616 <88044>	WASHER,FLAT-STEEL,CARBON,.... 1.015 IN.ID,1.750 IN.OD, 0.090 IN.THK		HD			*	*	*		*		
			5310-167-1373	MS35650-24 <96906>	NUT,PLAIN,HEXAGON-CRES,..... NO.2-64 NF		EA			*	*	*		*		
			5310-176-8111	A63-45-7 <74080>	NUT,SLOTTED,HEXAGON-STEEL,... 7/16 IN.-20 NF		LL							*		
			5310-188-7971	MS27130-16 <96906>	NUT,BLIND RIVET-ALUMINUM..... ALLOY,FLAT KEYED HEAD,NO. 8-32 NC,0.532 IN.LG		EA			*	*	*		*		
			5310-188-7972	MS27130-18K <96906>	NUT,BLIND RIVET-ALUMINUM..... ALLOY,FLAT HEAD,NO.8-32 NC,1/2 IN.LG		EA			*	*	*		*		
			5310-194-0637	AN122582 <88044>	WASHER,PLAIN-STEEL,0.250..... IN.ID,0.500 IN.OD,0.062 IN. THK		EA			*	*	*		*		
			5310-196-6676	AN901-4A <88044>	WASHER,FLAT-ALUMINUM,0.443... IN.ID,0.683 IN.OD, 0.0508 IN.THK		EA			*	*	*		*		
			5310-205-9966	<81348>	WASHER,FLAT-STEEL,RD,0..... 0.328 IN.ID,0.625 IN.OD, 0.064 IN.THK,FED FF-W-92		EA			*	*	*		*		
			5310-208-4023	MS20500-524 <96906>	NUT,SELF-LOCKING,HEXAGON-....		EA			*	*	*		*		

(1) SOURCE, MAINT AND REC CODE (a) SOURCE CODE	(b) MAINT LEVEL	(c) REC CODE	(2) FEDERAL STOCK NUMBER	REFERENCE NUMBER	(3) DESCRIPTION	MODELS USABLE ON CH-34C	(4) UNIT OF ISSUE	(5) QTY INC IN UNIT PACK	(6) QTY INC IN UNIT	(7) 30-DAY DS/GS MAINT ALW (a) 1-20	(b) 21-50	(c) 51-100	(8) 1-YR ALW PER 100 EQUIP CNTGCY	(9) DEPOT MAINT ALW PER 100 EQUIP	(10) ILLUSTRATION (a) FIG NO	(b) ITEM NO
					CONTINUED										BULK	
					CRES,5/16 IN.-24 NF											
			5310-208-4135	AN924-20D <88044>	NUT,PLAIN,HEXAGON-ALUMINUM... ALLOY,1-5/8 IN.-12N,FOR 1-1/4 IN.OD TUBE		EA			*	*	*		*		
			5310-208-5775	MS24400-8 <96906>	NUT,PLAIN,HEXAGON-STEEL,..... 3/4 IN.-16 NF		EA			*	*	*		*		
			5310-209-3836	100951X094-100-112 <70898>	WASHER,FLAT-STEEL,1 IN.ID,... 1.375 IN.OD,0.094 IN.THK		EA			*	*	*		*		
			5310-219-7548	806866 <66640>	WASHER,FLAT-STEEL,1.561 IN... ID,3 IN.OD,5/16 IN.THK		EA							*		
			5310-262-5908	W06CP <19315>	WASHER,FLAT-BRASS,0.138 IN... ID,0.312 IN.OD,0.028 IN.THK		EA							*		
			5310-264-1389	AN961-8 <88044>	WASHER,FLAT-BRASS,0.174 IN... ID,0.375 IN.OD,0.038 IN.THK		HD			*	*	*		*		
			5310-264-1390	MS45901-4 <96906>	WASHER,FLAT-BRASS,0.203 IN... ID,0.438 IN.OD,0.032 IN.THK		HD			*	*	*		*		
			5310-268-6054	AN316-10R <88044>	NUT,PLAIN,HEXAGON-STEEL,5/8.. IN.-18 NF		AV			*	*	*		*		
			5310-275-4300	AN362C524 <88044>	NUT,SELF-LOCKING,PLATE,..... CRES,5/16 IN.-32 NF		EA			*	*	*		*		
			5310-275-4303	AN362C428 <88044>	NUT,SELF-LOCKING,PLATE,..... CRES,1/4 IN.-28 NF		EA			*	*	*		*		
			5310-276-1214	3028-6 <73842>	WASHER,LOCK.....		EA			*	*	*		*		
			5310-282-7822	MS24400-10 <96906>	NUT,PLAIN,HEXAGON-STEEL,..... 7/8 IN.-14 NF		EA			*	*	*		*		
			5310-282-7833	MS244000D12 <96906>	NUT,PLAIN,HEXAGON-ALUMINUM... ALLOY,1-1/16 IN.-12 N		EA			*	*	*		*		
			5310-285-7640	WO-0N <19315>	WASHER,FLAT.....		EA			*	*	*		*		
			5310-297-3716	EB108 <72962>	NUT,EXTENDED WASHER,DOUBLE... HEXAGON-STEEL,W/NONMETALLIC INSERT,5/8 IN.-18 NF		EA			*	*	*		*		
			5310-297-3720	EB1216 <84460>	NUT.....		EA			*	*	*		*		
			5310-298-2747	MS20500-428 <96906>	NUT,SELF-LOCKING,HEXAGON..... 1/4 IN.-28 NF		EA			*	*	*		*		
			5310-334-9618	145206Y26 <66640>	WASHER,IMPELLER DRIVE SHAFT..		EA							*		
			5310-515-8716	AN316C6R <88044>	NUT,PLAIN,HEXAGON-CRES,RH,... 3/8 IN.-24 NF		EA			*	*	*		*		
			5310-522-0483	8465607P1 <24446>	NUT.....		EA							*		
			5310-527-5062	22NG1-048J8 <72962>	NUT ASSEMBLY,SELF-LOCKING.... GANG CHANNEL		EA							*		
			5310-531-9515	AN960C416 <88044>	WASHER,FLAT-ROUND,CRES,..... 0.265 IN.ID,0.500 IN.OD, 0.063 IN.THK		HD			*	*	*		*		
			5310-543-2426	NAS513-8 <80205>	WASHER,KEY-STEEL,0.520 IN.... ID,0.750 IN.OD,0.063 IN. THK,1 INTERNAL KEY		EA							*		
			5310-550-9237	AN150410 <88044>	NUT,PLAIN,HEXAGON-STEEL,..... 3/8 IN.-24 NF		EA			*	*	*		*		
			5310-551-7016	NAS1030N3 <80205>	NUT,SELF-LOCKING,PLATE..... STEEL,W/NONFLOATING NUT PERMANENTLY ASSEMBLED,		EA			*	*	*		*		

(1) SOURCE, MAINT AND REC CODE (a) SOURCE CODE	(b) MAINT LEVEL	(c) REC CODE	(2) FEDERAL STOCK NUMBER	REFERENCE NUMBER	(3) DESCRIPTION	MODELS USABLE ON CH-34C	(4) UNIT OF ISSUE	(5) QTY INC IN UNIT PACK	(6) QTY INC IN UNIT	(7) 30-DAY DS GS MAINT ALW (a) 1-20	(b) 21-50	(c) 51-100	(8) 1-YR ALW PER 100 EQUIP CNTGCY	(9) DEPOT MAINT ALW PER 100 EQUIP	(10) ILLUSTRATION (a) FIG NO	(b) ITEM NO
					CONTINUED PREVAILING TORQUE, NONMETALLIC INSERT,NO.10-32 NF,0.406 IN.W,1.006 IN.LG, 0.312 IN.H,2 MTG HOLES, 0.098 IN.DIA										BULK	
			5310-551-7017	NAS1030N4 <80205>	NUT,SELF-LOCKING,PLATE-STEEL, 1/4 IN. -28 NF,W/NYLON INSERT,2 MTG HOLES		EA			*	*	*		*		
			5310-576-0546	MS35338-99 <96906>	WASHER,LOCK-BRONZE,0.296..... IN.OD,0.046 IN.THK		HD			*	*	*		*		
			5310-584-7948	MS35337-97 <96906>	WASHER,LOCK-BRONZE,0.124..... IN.ID,0.202 IN.OD,0.026 IN. THK		HD			*	*	*		*		
			5310-595-6057	MS15795-315 <96906>	WASHER,FLAT-STEEL,7/16 IN.... ID,1 IN.OD,3/8 IN.LG		EA			*	*	*		*		
			5310-595-6607	AN960C1216L <88044>	WASHER,FLAT-STEEL,CORROSION.. RESISTANT,0.765 IN. ID, 1.312 IN. OD,0.032 IN. THK		EA			*	*	*		*		
			5310-595-7078	MS20002C5 <96906>	WASHER,RECESSED-STEEL ALLOY,. 0.315 IN.ID,0.593 IN.OD, 0.078 IN.THK		EA			*	*	*		*		
			5310-622-1723	NAS1031N3 <80205>	NUT,SELF-LOCKING,PLATE..... STEEL,NO.10-32 NF,0.416 IN. W,0.984 IN.LG,0.075 IN.THK, 0.312 IN.H,2 MTG HOLES, 0.098 IN.DIA		EA			*	*	*		*		
			5310-623-5985	NAS1033A4 <80205>	NUT,SELF-LOCKING,PLATE-STEEL, 1/4 IN. -28 NF		EA			*	*	*		*		
			5310-685-6845	NAS1033N4 <80205>	NUT,SELF-LOCKING,PLATE..... STEEL,1/4 IN.-28 NF,0.687 IN.W,0.906 IN.LG,0.546 IN. H,2 MTG HOLES,0.098 IN.DIA		EA			*	*	*		*		
			5310-687-6293	MS35649-22 <96906>	NUT,PLAIN,HEXAGON-STEEL,..... CARBON,NO.2-56 NC		GR			*	*	*		*		
			5310-726-9067	MS21078-08 <96906>	NUT,SELF-LOCKING,PLATE..... STEEL,W/NONMETALLIC INSERT, NO.8-32 NC,0.406 IN.W,0.984 IN.LG,0.297 IN.H,2 MTG HOLES,0.098 IN.DIA		HD			*	*	*		*		
			5310-728-5503	MS21077-4 <96906>	NUT,SELF-LOCKING,PLATE..... STEEL,W/NONMETALLIC INSERT, 1/4 IN.-28 NF,0.516 IN.W, 1.296 IN.LG,0.075 IN.H,2 MTG HOLES,0.098 IN.DIA		EA			*	*	*		*		
			5310-728-5510	MS21078-3 <96906>	NUT,SELF-LOCKING,PLATE..... STEEL,W/NON METALLIC INSERT,NO.10-32 NF,0.406 IN.W,0.984 IN.LG,0.312 IN. H,2 MTG HOLES,0.098 IN.DIA		EA			*	*	*		*		
			5310-728-5519	MS21078-4 <96906>	NUT,SELF-LOCKING,PLATE-STEEL, 1/4 IN.-28 NF,0.516 IN.W,		EA			*	*	*		*		

(1) SOURCE, MAINT AND REC CODE (a) SOURCE CODE	(b) MAINT LEVEL	(c) REC CODE	(2) FEDERAL STOCK NUMBER	REFERENCE NUMBER	(3) DESCRIPTION	MODELS USABLE ON CH-34C	(4) UNIT OF ISSUE	(5) QTY INC IN UNIT PACK	(6) QTY INC IN UNIT	(7) 30-DAY DS GS MAINT ALW (a) 1-20	(b) 21-50	(c) 51-100	(8) 1-YR ALW PER 100 EQUIP CNTGCY	(9) DEPOT MAINT ALW PER 100 EQUIP	(10) ILLUSTRATION (a) FIG NO	(b) ITEM NO
					CONTINUED 1.296 IN.LG,0.375 IN.H,2 MTG HOLES,0.098 IN.DIA, NONMETALLIC INSERT										BULK	
			5310-728-5520	MS21078-5 <96906>	NUT,SELF-LOCKING,PLATE-STEEL, 5/16 IN.-24 NF,0.531 IN.W, 1.296 IN.LG,0.375 IN.H,2 MTG HOLES,0.130 IN.DIA, NONMETALLIC INSERT		EA			*	*	*		*		
			5310-728-7708	MS21081-5 <96906>	NUT,SELF-LOCKING,PLATE..... STEEL,W/NONMETALLIC INSERT, 5/16 IN.-24 NF,0.937 IN.W, 0.375 IN.H,2 MTG HOLES, 0.130 IN.DIA		EA			*	*	*		*		
			5310-728-7711	MS21081-3 <96906>	NUT,SELF-LOCKING,PLATE..... STEEL,NO.10-32 NF,2 MTG HOLES		EA			*	*	*		*		
			5310-771-7348	MS21048-3 <96906>	NUT,SELF-LOCKING-STEEL,NO.... 10-32 NF		EA			*	*	*		*		
			5310-804-0075	EAB1400 <81996>	NUT,SELF-LOCKING.....		EA			*	*	*		*		
			5310-804-4235	MS24400-5 <96906>	NUT,PLAIN,HEXAGON-STEEL,..... 1/2 IN.-28 NF		EA			*	*	*		*		
			5310-807-1468	MS21042-4 <96906>	NUT,EXTENDED WASHER,HEXAGON.. STEEL,W/ALL METAL PREVAILING TORQUE,1/4 IN.-28 NF		HD			*	*	*		*		
			5310-818-6457	MS35650-22 <96906>	NUT,PLAIN,HEXAGON-STEEL,..... CARBON,NO.2-64 NF		EA			*	*	*		*		
			5310-857-5559	MS21045L5 <96906>	NUT,SELF-LOCKING,HEXAGON..... STEEL,5/16 IN.-24 NF		HD			*	*	*		*		
			5310-857-5562	MS21045L8 <96906>	NUT,SELF-LOCKING,HEXAGON..... STEEL,1/2 IN.-20 NF		EA			*	*	*		*		
			5310-877-5798	MS21044D3 <96906>	NUT,SELF-LOCKING,HEXAGON..... ALUMINUM ALLOY,NO.10-32 NF		EA			*	*	*		*		
			5310-939-0783	MS21083N12 <96906>	NUT,SELF-LOCKING,HEXAGON..... STEEL,3/4 IN.-16 NF		LL			*	*	*		*		
			5310-952-1872	MS21045C08 <96906>	NUT,SELF-LOCKING,HEXAGON..... CRES,NO.8-32 NC		EA			*	*	*		*		
			5310-982-5064	MS21044B3 <96906>	NUT,SELF-LOCKING,HEXAGON..... COPPER BASE ALLOY, W/NON-METALLIC INSERT, NO.10-32 NF		EA			*	*	*		*		
			5310-984-7042	MS35338-141 <96906>	WASHER LOCK-CRES,0.382 IN.... ID,0.683 IN.OD,0.094 IN.THK		EA			*	*	*		*		
			5310-988-5329	MS27130-8K <96906>	NUT,BLIND,RIVET-ALUMINUM..... ALLOY,FLAT HEAD,NO.1-32 NC,0.470 IN.LG		EA			*	*	*		*		
			5315-062-7251	MS20392-1C57 <96906>	PIN,STRAIGHT,HEADED-STEEL.... ALLOY,PAN HEAD,DRILLED SHANK,1/8 IN.DIA,1.781 IN. EFFECTIVE LG		EA			*	*	*		*		
			5315-064-2701	MS20392-3C37 <96906>	PIN,STRAIGHT,HEADED-STEEL....		EA			*	*	*		*		

(1) SOURCE, MAINT AND REC CODE (a) SOURCE CODE	(b) MAINT CODE	(c) REC CODE	(2) FEDERAL STOCK NUMBER	(3) DESCRIPTION REFERENCE NUMBER			MODELS USABLE ON CH-34C	(4) UNIT OF ISSUE	(5) QTY INC IN UNIT PACK	(6) QTY INC IN UNIT	(7) 30-DAY DS/GS MAINT ALW (a) 1 20	(b) 21-50	(c) 51 100	(8) 1-YR ALW PER 100 EQUIP CNTGCY	(9) DEPOT MAINT ALW PER 100 EQUIP	(10) ILLUSTRATION (a) FIG NO	(b) ITEM NO
						CONTINUED ALLOY,PAN HEAD,DRILLED SHANK,1/4 IN.DIA,1.156 IN. EFFECTIVE LG										BULK	
			5315-080-1936	MS20392-4C51	<96906>	PIN,STRAIGHT,HEADED-STEEL.... ALLOY,PAN HEAD,DRILLED SHANK,5/16 IN.DIA,1.594 IN. EFFECTIVE LG		EA			*	*	*		*		
			5315-081-7023	MS20392-4C11	<96906>	PIN,STRAIGHT,HEADED-STEEL.... ALLOY,PAN HEAD,DRILLED SHANK,5/16 IN.DIA,0.344 IN. EFFECTIVE LG		EA			*	*	*		*		
			5315-187-9370	MS24665-172	<96906>	PIN,COTTER-BRASS,1/16 IN.DIA, 3/4 IN.LG,FOR 5164 IN.HOLE SIZE		EA			*	*	*		*		
			5315-234-1860	AN381-2-32	<88044>	PIN,COTTER-STEEL,CORROSION... RESISTANT, 1/16 IN. DIA, 2 IN. LG		HD			*	*	*		*		
			5315-234-1861	MS24665-298	<96906>	PIN,COTTER-CRES,3/32 IN.DIA,.. 1/2 IN.LG,FOR 7/64 IN.HOLE SIZE		HD							*		
			5315-236-8359	MS24665-370	<96906>	PIN,COTTER-CRES,1/8 IN.DIA,.. 1/2 IN.LG		HD							*		
			5315-236-8365	MS24665-380	<96906>	PIN,COTTER-CRES,0.125 IN..... DIA,3.000 IN.LG		HD			*	*	*		*		
			5315-236-8370	AN381-5-20	<88044>	PIN,COTTER-CRES,5/32 IN..... DIA,1-1/4 IN.LG		HD			*	*	*		*		
			5315-236-8371	AN381-5-24	<88044>	PIN,COTTER-CRES,5/32 IN..... DIA,1-1/2 IN.LG		HD			*	*	*		*		
			5315-265-9899	AN386-2-18A	<88044>	PIN,TAPERED,THREADED-STEEL,.. NO. 10-32 NF,2-3/8 IN. LG		EA			*	*	*		*		
			5315-281-7692	AN150253	<88044>	PIN,STRAIGHT,HEADED-STEEL,... 0.1250 IN.DIA,0.188 IN.LG		EA							*		
			5315-285-7161	MS24665-377	<96906>	PIN,COTTER-STEEL,CORROSION... RESISTANT, 1/8 IN. DIA, 2 IN. LG		HD			*	*	*		*		
			5315-298-1031	AN386-2-10A	<88044>	PIN,TAPERED,THREADED-STEEL,.. NO.10-32 NF,1/4 IN.DIA, 1-13/16 IN.LG		EA			*	*	*		*		
			5315-537-1301	371-10	<89944>	PIN,STRAIGHT,HEADLESS..... STEEL,0.044 IN.DIA,0.225 IN.LG		EA			*	*	*		*		
			5315-605-2977	MS24692-53P	<96906>	PIN,TAPERED,PLAIN-STEEL..... ALLOY,CADMIUM PLATED,3/32 IN.DIA,1/2 IN.LG,1/4 IN.TAPER PER FOOT FT		EA			*	*	*		*		
			5315-664-1002	8465867PI	<24446>	PIN,STRAIGHT,HEADLESS-STEEL,. BOTH ENDS SQ,DRILLED SHANK, 0.312 IN.DIA,1.812 IN.LG		EA							*		
			5315-682-1460	MS24665-157	<96906>	PIN,COTTER-CRES,1/16 IN..... DIA,1-1/4 IN.LG,FOR 5/64 IN.HOLE SIZE		EA			*	*	*		*		

(1) SOURCE, MAINT AND REC CODE (a) SOURCE CODE	(b) MAINT LEVEL	(c) REC CODE	(2) FEDERAL STOCK NUMBER	REFERENCE NUMBER	(3) DESCRIPTION	MODELS USABLE ON CH-34C	(4) UNIT OF ISSUE	(5) QTY INC IN UNIT PACK	(6) QTY INC IN UNIT	(7) 30-DAY DS GS MAINT ALW (a) 1-20	(b) 21-50	(c) 51-100	(8) 1-YR ALW PER 100 EQUIP CNTGCY	(9) DEPOT MAINT ALW PER 100 EQUIP	(10) ILLUSTRATION (a) FIG NO	(b) ITEM NO
			5315-687-5218	MS35756-3 <96906>	KEY,WOODRUFF-STEEL,RD..... BOTTOM,0.375 IN.CIRCLE DIA, 0.125 IN.THK,0.172 IN.H		EA			*	*	*		*	BULK	
			5315-702-9650	MS16555-602 <96906>	PIN,STRAIGHT,HEADLESS-CRES,.. 1 END SQ,1 END CHAMFERED, 0.063 IN.DIA,0.250 IN.LG		EA							*		
			5315-740-6711	S1525-5052 <78286>	KEY,WOODRUFF.....		EA			*	*	*		*		
			5315-753-3896	MS16562-268 <96906>	PIN,SPRING-CRES,1-3/4 IN.LG,.. FOR 0.375 IN.TO 0.382 IN. HOLE SIZE		EA			*	*	*		*		
			5315-805-5798	AN253-2-3962 <88044>	PIN,STRAIGHT,HEADLESS-STEEL,.. 0.090 IN.DIA,3.977 IN.LG		EA			*	*	*		*		
			5315-811-1245	MS20392-2C35 <96906>	PIN,STRAIGHT,HEADED-STEEL.... ALLOY,PAN HEAD,DRILLED SHANK,3/16 IN.DIA,1.094 IN. EFFECTIVE LG		EA			*	*	*		*		
			5315-811-3791	MS20392-3C11 <96906>	PIN,STRAIGHT,HEADED-STEEL.... ALLOY,PAN HEAD,DRILLED SHANK,1/4 IN.DIA,0.344 IN. EFFECTIVE LG		EA			*	*	*		*		
			5315-812-3424	MS20392-4C19 <96906>	PIN,STRAIGHT,HEADED-STEEL.... ALLOY,PAN HEAD,DRILLED SHANK,5/16 IN.DIA,0.594 IN. EFFECTIVE LG		EA			*	*	*		*		
			5315-812-3775	MS20392-1C25 <96906>	PIN,STRAIGHT,HEADED-STEEL.... ALLOY,PAN HEAD,DRILLED SHANK,1/8 IN.DIA,0.781 IN. EFFECTIVE LG		EA			*	*	*		*		
			5315-823-8754	MS16562-195 <96906>	PIN,SPRING-CRES,9/16 IN.LG,.. FOR 0.062 IN.TO 0.065 IN. HOLE SIZE		HD			*	*	*		*		
			5315-828-5486	MS35671-16 <96906>	PIN,GROOVED,HEADLESS-STEEL,.. 3/32 IN.DIA,3/8 IN.LG		EA			*	*	*		*		
			5315-839-5822	MS24665-353 <96906>	PIN,COTTER-STEEL,1/8 IN..... DIA,1 IN.LG,FED FF-P-386B		HD			*	*	*		*		
			5315-841-4443	MS16562-225 <96906>	PIN,SPRING-CRES,0.875 IN..... LG,FOR 0.125 IN.TO 0.129 IN.HOLE SIZE		EA			*	*	*		*		
			5315-844-9710	MS16562-32 <96906>	PIN,SPRING-STEEL,CARBON,..... 7/16 IN.LG,FOR 0.125 IN.TO 0.129 IN.HOLE SIZE		EA			*	*	*		*		
			5315-899-4116	MS24665-520 <96906>	PIN,COTTER-CRES,3/16 IN..... DIA,3 IN.LG		HD			*	*	*		*		
			5315-969-6623	MS24665-82 <96906>	PIN,COTTER-CRES,3/64 IN.DIA,.. 1/4 IN.LG,FOR 1/16 IN.HOLE SIZE		EA			*	*	*		*		
			5315-990-1338	MS20392-2C19 <96906>	PIN,STRAIGHT,HEADED-STEEL,... PAN HEAD,DRILLED SHANK,3/16 IN.DIA,0.594 IN. EFFECTIVE LG		EA			*	*	*		*		
			5320-531-0744	ALPPHT6-3 <29666>	PIN,RIVET-STEEL,FLAT HEAD,... 3/16 IN.DIA,0.218 IN.LG		EA							*		

(1) SOURCE, MAINT AND REC CODE (a) SOURCE CODE	(b) MAINT LEVEL	(c) REC CODE	(2) FEDERAL STOCK NUMBER	REFERENCE NUMBER	(3) DESCRIPTION	MODELS USABLE ON CH-34C	(4) UNIT OF ISSUE	(5) QTY INC IN UNIT PACK	(6) QTY INC IN UNIT	(7) 30-DAY DS/GS MAINT ALW (a) 1-20	(b) 21-50	(c) 51-100	(8) 1-YR ALWPER 100 EQUIP CNTGCY	(9) DEPOT MAINT ALWPER 100 EQUIP	(10) ILLUSTRATION (a) FIG NO	(b) ITEM NO
			5320-038-3382	CKLP5L <29666>	RIVET,BLIND-ALUMINUM ALLOY,.. OVAL HEAD,MECHANICALLY EXPANDED,SELF-PLUGGING SHANK,5/32 IN.DIA,0.463 IN. LG,0.355 IN.GRIP LG		EA			*	*	*		*	BULK	
			5320-061-9660	MS20600B5W4 <96906>	RIVET,BLIND-ALUMINUM ALLOY... <5056>,PULL STEM, SELF-PLUGGING,PROTRUDING HEAD,5/32 IN.DIA,0.188 IN. TO 0.250 IN.GRIP LG, SERRATED STEM		EA			*	*	*		*		
			5320-062-6628	MS20613-4C10 <96906>	RIVET,SOLID-CRES,UNIVERSAL,.. HEAD,1/8 IN.DIA,5/8 IN.LG		LB			*	*	*		*		
			5320-117-6010	MS20426AD2-3 <96906>	RIVET,SOLID-FLUSH..... COUNTERSUNK HEAD <100 DEG> MONEL ANNEALED W/CHAMFER, ALUMINUM ALLOY, ANODIZED, STRAIGHT SHANK, 1/16 X 3/16		LB			*	*	*		*		
			5320-117-6021	MS20426B3-6 <96906>	RIVET,SOLID-FLUSH..... COUNTERSUNK HEAD <100 DEG>, ALUMINUM ALLOY <GR5056-F>, ANODIZED,3/32 IN.DIA, 3/8 IN.LG		LB			*	*	*		*		
			5320-117-6376	MS20426B4-4 <96906>	RIVET,SOLID-FLUSH..... COUNTERSUNK HEAD <100 DEG>, ALUMINUM ALLOY <GR5056-H32> ANODIZED,1/4 IN.LG		LB			*	*	*		*		
			5320-117-6377	MS20426B4-8 <96906>	RIVET,SOLID-FLUSH..... COUNTERSUNK HEAD <100 DEG> ALUMINUM ALLOY <GR 5056-H32> ANODIZED OR CHEMICALLY TREATED FINISH		LB			*	*	*		*		
			5320-117-6382	MS20426B5-6 <96906>	RIVET,SOLID-FLUSH..... COUNTERSUNK HEAD <100 DEG>, ALUMINUM ALLOY <GR 5056-H32> ANODIZED OR CHEMICALLY TREATED FINISH		LB			*	*	*		*		
			5320-117-6521	MS20470DD6-4 (90696)	RIVET,SOLID-ALUMINUM ALLOY... <GR2024>,UNIVERSAL HEAD, 3/16 IN.DIA,1/4 IN.LG		LB			*	*	*		*		
			5320-117-6522	MS20470DD6-5 <96906>	RIVET,SOLID-ALUMINUM ALLOY... <GR2024>,UNIVERSAL HEAD, 3/16 IN.DIA,5/16 IN.LG, 0.031 IN.GRIP LG		LB			*	*	*		*		
			5320-117-6523	MS20470DD6-6 <96906>	RIVET,SOLID-ALUMINUM ALLOY... <GR2024>,UNIVERSAL HEAD, 3/16 IN.DIA,3/8 IN.LG, 0.094 IN.GRIP LG		LB			*	*	*		*		
			5320-117-6524	MS20470DD6-7 <96906>	RIVET,SOLID-ALUMINUM ALLOY... <GR2024>,UNIVERSAL HEAD, 3/16 IN.DIA,7/16 IN.LG, 0.156 IN.GRIP LG		LB			*	*	*		*		

(1) SOURCE, MAINT AND REC CODE (a) SOURCE CODE	(b) MAINT LEVEL	(c) REC CODE	(2) FEDERAL STOCK NUMBER	REFERENCE NUMBER		(3) DESCRIPTION	MODELS USABLE ON CH-34C	(4) UNIT OF ISSUE	(5) QTY INC IN UNIT PACK	(6) QTY INC IN UNIT	(7) 30-DAY DS GS MAINT ALW (a) 1-20	(b) 21-50	(c) 51-100	(8) 1-YR ALW PER 100 EQUIP CNTGCY	(9) DEPOT MAINT ALW PER 100 EQUIP	(10) ILLUSTRATION (a) FIG NO	(b) ITEM NO
			5320-117-6525	MS20470DD6-8	<96906>	RIVET,SOLID-ALUMINUM ALLOY... <GR2117>,UNIVERSAL HEAD, 3/16 IN.DIA,1/2 IN.LG, 0.219 IN.GRIP LG		LB			*	*	*		*	BULK	
			5320-117-6885	MS20426AD5-8	<96906>	RIVET,SOLID-ALUMINUM ALLOY... <GR2117-T4>,FLAT HEAD,5/32 IN.DIA,1/2 IN.LG,0.266 IN. GRIP LG		LB			*	*	*		*		
			5320-117-6904	MS20426AD8-22	<96906>	RIVET,SOLID-ALUMINUM ALLOY,.. FLUSH COUNTERSUNK HEAD <100 DEG>,ANODIZED OR CHEMICALLY TREATED FINISH, 1/4 IN.DIA,1-3/8 IN.LG		LB							*		
			5320-117-6907	MS20426AD8-32	<96906>	RIVET,SOLID-ALUMINUM ALLOY... <GR2117-T4>,FLAT HEAD,1/4 IN.DIA,2 IN.LG,1.750 IN. GRIP LG		LB							*		
			5320-117-6938	MS20426AD3-4	<96906>	RIVET,SOLID-ALUMINUM ALLOY... <GR2117-T4>,FLAT HEAD,3/32 IN.DIA,1/4 IN.LG,0.109 IN. GRIP LG		LB							*		
			5320-117-6950	MS20426AD4-5	<96906>	RIVET,SOLID-ALUMINUM ALLOY... <GR2117-T4>,FLAT HEAD,1/8 IN.DIA,5/16 IN.LG,0.125 IN. GRIP LG		LB			*	*	*		*		
			5320-117-6951	MS20426AD4-6	<96906>	RIVET,SOLID-ALUMINUM ALLOY... <GR2117-T4>,FLAT HEAD,1/8 IN.DIA,3/8 IN.LG,0.187 IN. GRIP LG		LB			*	*	*		*		
			5320-117-7224	MS20426DD6-6	<96906>	RIVET,SOLID-ALUMINUM ALLOY... <GR2024-T4>,FLAT HEAD,3/16 IN.DIA,3/8 IN.LG,0.094 IN. GRIP LG		LB			*	*	*		*		
			5320-117-7225	MS20426DD6-7	<96906>	RIVET,SOLID-ALUMINUM ALLOY... <GR2024-T4>,FLAT HEAD,3/16 IN.DIA,7/16 IN.LG,0.156 IN. GRIP LG		LB			*	*	*		*		
			5320-117-7286	MS20426AD6-6	<96906>	RIVET,SOLID-ALUMINUM ALLOY... <GR2117-T4>,FLAT HEAD,3/16 IN.DIA,3/8 IN.LG,0.094 IN. GRIP LG		LB			*	*	*		*		
			5320-118-1995	MS20470B4-6	<96906>	RIVET,SOLID-ALUMINUM ALLOY... <GR5056>,UNIVERSAL HEAD, 1/8 IN.DIA,3/8 IN.LG,0.187 IN.GRIP LG		LB							*		
			5320-118-1996	MS20470B5-4	<96906>	RIVET,SOLID-ALUMINUM ALLOY... <GR5056>,UNIVERSAL HEAD, 5/32 IN.DIA,1/4 IN.LG,0.016 IN.GRIP LG		LB			*	*	*		*		
			5320-118-1997	MS20470B5-5	<96906>	RIVET,SOLID-ALUMINUM ALLOY... <GR5056>,UNIVERSAL HEAD, 5/32 IN.DIA,5/16 IN.LG,		LB			*	*	*		*		

(1) SOURCE, MAINT AND REC CODE (a) SOURCE CODE	(b) MAINT LEVEL	(c) REC CODE	(2) FEDERAL STOCK NUMBER	REFERENCE NUMBER	(3) DESCRIPTION	MODELS USABLE ON CH-34C	(4) UNIT OF ISSUE	(5) QTY INC IN UNIT PACK	(6) QTY INC IN UNIT	(7) 30-DAY DS/GS MAINT ALW (a) 1-20	(b) 21-50	(c) 51-100	(8) 1-YR ALW PER 100 EQUIP CNTGCY	(9) DEPOT MAINT ALW PER 100 EQUIP	(10) ILLUSTRATION (a) FIG NO	(b) ITEM NO
					CONTINUED										BULK	
					0.079 IN.GRIP LG											
			5320-118-1998	MS20470B5-7 <96906>	RIVET,SOLID-ALUMINUM ALLOY... <GR5056>,UNIVERSAL HEAD, 5/32 IN.DIA,7/16 IN.LG, 0.204 IN.GRIP LG		LB			*	*	*		*		
			5320-118-2005	MS20427M4-4 <96906>	RIVET,SOLID-MONEL,FLUSH..... COUNTERSUNK HEAD,1/8 IN. DIA,1/4 IN.LG		LB			*	*	*		*		
			5320-118-2006	MS20427M4-6 <96906>	RIVET,SOLID-MONEL,FLUSH..... COUNTERSUNK HEAD,1/8 IN. DIA,3/8 IN.LG		LB			*	*	*		*		
			5320-118-2007	MS20427M4-8 <96906>	RIVET,SOLID-MONEL,FLUSH..... COUNTERSUNK HEAD,1/8 IN. DIA,1/2 IN.LG		LB			*	*	*		*		
			5320-118-2016	MS20427M6-6 <96906>	RIVET,SOLID-MONEL,FLUSH..... COUNTERSUNK HEAD,3/16 IN. DIA,3/8 IN.LG		LB			*	*	*		*		
			5320-119-5549	CKLP5E <29666>	RIVET,BLIND-ALUMINUM ALLOY... <GR5056-H32>,UNIVERSAL HEAD,MECHANICALLY EXPANDED, SELF-PLUGGING SHANK,5/32 IN.DIA,0.286 IN.LG,0.169 IN.GRIP LG		EA			*	*	*		*		
			5320-119-5550	CKLP5G <29666>	RIVET,BLIND-ALUMINUM ALLOY... <GR5056-H32>,MECHANICALLY EXPANDED,UNIVERSAL HEAD, SELF-PLUGGING SHANK,5/32 IN.DIA,0.348 IN.LG,0.201 IN.TO 0.231 IN.GRIP RANGE		EA			*	*	*		*		
			5320-119-6825	MS20470B4-12 <96906>	RIVET,SOLID-ALUMINUM ALLOY... <GR5056>,UNIVERSAL HEAD, 1/8 IN.DIA,3/4 IN.LG,0.562 IN.GRIP LG		LB			*	*	*		*		
			5320-147-1645	CKL100YVA <29666>	RIVET,BLIND.....		EA			*	*	*		*		
			5320-147-1647	100V4C <29666>	RIVET,BLIND-ALUMINUM,..... ANODIZED,MECHANICALLY EXPANDED,FLUSH COUNTERSUNK HEAD <100 DEG>, SELF-PLUGGING SHANK,1/8 IN. DIA,0.222 IN.LG,0.104 IN.TO 0.128 IN.GRIP RANGE		EA			*	*	*		*		
			5320-165-8755	MS20426B6-24 <96906>	RIVET,SOLID-FLUSH..... COUNTERSUNK HEAD <100 DEG>, ALUMINUM ALLOY <GR5056-H32>,ANODIZED OR CHEMICALLY TREATED FINISH, 3/16 X 1-1/2		LB			*	*	*		*		
			5320-165-8768	MS20426B3-5 <96906>	RIVET,SOLID-ALUMINUM ALLOY... <GR5056H32>,FLAT HEAD 3/32 IN.DIA,5/16 IN.LG, 0.171 IN.GRIP LG		LB			*	*	*		*		

(1) SOURCE, MAINT AND REC CODE (a) SOURCE CODE	(b) MAINT LEVEL	(c) REC CODE	(2) FEDERAL STOCK NUMBER	REFERENCE NUMBER	(3) DESCRIPTION	MODELS USABLE ON CH-34C	(4) UNIT OF ISSUE	(5) QTY INC IN UNIT PACK	(6) QTY INC IN UNIT	(7) 30-DAY DS GS MAINT ALW (a) 1-20	(b) 21-50	(c) 51 100	(8) 1-YR ALW PER 100 EQUIP CNTGCY	(9) DEPOT MAINT ALW PER 100 EQUIP	(10) ILLUSTRATION (a) FIG NO	(b) ITEM NO
			5320-165-8775	MS20426B5-4 <96906>	RIVET,SOLID-ALUMINUM ALLOY... <GR5056H32>,FLAT HEAD, 5/32 IN.DIA,1/4 IN.LG, 0.016 IN.GRIP LG		LB			*	*	*		*	BULK	
			5320-165-8779	MS20426B5-12 <96906>	RIVET,SOLID-ALUMINUM ALLOY... <GR5056H32>,FLAT HEAD, 5/32 IN.DIA,3/4 IN.LG, 0.516 IN.GRIP LG		LB			*	*	*		*		
			5320-165-8785	MS20426B6-6 <96906>	RIVET,SOLID-ALUMINUM ALLOY... <GR5056H32>,FLAT HEAD, 3/16 IN.DIA,3/4 IN.LG, 0.094 IN.GRIP LG		LB			*	*	*		*		
			5320-165-8789	MS20426B6-12 <96906>	RIVET,SOLID-ALUMINUM ALLOY... <GR5056H32>,FLAT HEAD, 3/16 IN.DIA,3/4 IN.LG, 0.469 IN.GRIP LG		LB			*	*	*		*		
			5320-165-8810	MS20470B3-3 <96906>	RIVET,SOLID-ALUMINUM ALLOY... <GR5056>,UNIVERSAL HEAD, 3/32 IN.DIA,3/16 IN.LG, 0.047 IN.GRIP LG		LB			*	*	*		*		
			5320-165-8815	MS20470B4-7 <96906>	RIVET,SOLID-ALUMINUM ALLOY... <GR5056>,UNIVERSAL HEAD, 1/8 IN.DIA,7/16 IN.LG, 0.249 IN.GRIP LG		LB			*	*	*		*		
			5320-165-8817	MS20470B5-6 <96906>	RIVET,SOLID-ALUMINUM ALLOY... <GR5056>,UNIVERSAL HEAD, 5/32 IN.DIA,3/8 IN.LG, 0.141 IN.GRIP LG		LB			*	*	*		*		
			5320-165-8818	MS20470B5-8 <96906>	RIVET,SOLID-ALUMINUM ALLOY... <GR5056>,UNIVERSAL HEAD, 5/32 IN.DIA,1/2 IN.LG, 0.266 IN.GRIP LG		LB			*	*	*		*		
			5320-165-8820	MS20470B5-12 <96906>	RIVET,SOLID-ALUMINUM ALLOY... <GR5056>,UNIVERSAL HEAD, 5/32 IN.DIA,3/4 IN.LG, 0.516 IN.GRIP LG		LB			*	*	*		*		
			5320-167-4944	AN461-4-8 <88044>	RIVET,BLIND-ALUMINUM ALLOY... UNIVERSAL HEAD,MECHANICALLY EXPANDED,SELF-PLUGGING SHANK,1/8 IN.DIA,0.205 IN. LG,0.111 IN.GRIP LG		EA			*	*	*		*		
			5320-167-4946	CKLP5C <29666>	RIVET,BLIND-ALUMINUM ALLOY... UNIVERSAL HEAD,MECHANICALLY EXPANDED,SELF-PLUGGING, 5/32 IN.DIA,0.224 IN.LG, 0.107 IN.GRIP LG		EA			*	*	*		*		
			5320-171-3771	MS20426B24 <96906>	RIVET,SOLID-ALUMINUM ALLOY... <GR5056H32>,FLAT HEAD,1/16 IN.DIA,1/4 IN.LG,0.156 IN. GRIP LG		EA			*	*	*		*		
			5320-205-8511	NAS1526-9 <80205>	PIN,RIVET-ALUMINUM ALLOY..... PAN HEAD,PROTRUDING HEAD,		EA			*	*	*		*		

(1) SOURCE, MAINT AND REC CODE (a) SOURCE CODE	(b) MAINT LEVEL	(c) REC CODE	(2) FEDERAL STOCK NUMBER	REFERENCE NUMBER	(3) DESCRIPTION	MODELS USABLE ON CH-34C	(4) UNIT OF ISSUE	(5) QTY INC IN UNIT PACK	(6) QTY INC IN UNIT	(7) 30-DAY DS/GS MAINT ALW (a) 1-20	(b) 21-50	(c) 51-100	(8) 1-YR ALW PER 100 EQUIP CNTGCY	(9) DEPOT MAINT ALW PER 100 EQUIP	(10) ILLUSTRATION (a) FIG NO	(b) ITEM NO
					CONTINUED SWAGE LOCKING,CLOSE TOLERANCE,3/16 IN.DIA, 0.796 IN.LG										BULK	
			5320-205-8512	NAS1526-10 <80205>	PIN,RIVET-STEEL,PAN HEAD,.... SWAGE LOCKING,CLOSE TOLERANCE,0.858 IN.DIA,5/8 IN.LG,0.595 IN.TO 0.656 IN.GRIP RANGE		EA			*	*	*		*		
			5320-223-6092	NAS179-4 <80205>	COLLAR RIVET PIN-ALUMINUM.... ALLOY <GR2117-T4>,0.124 IN.ID,0.190 IN.OD, 0.157 IN.LG		EA			*	*	*		*		
			5320-239-1287	AN461-4-16 <88044>	RIVET,BLIND-ALUMINUM ALLOY... BRAZIER HEAD,0.087 IN.DIA, 0.947 IN.LG		EA			*	*	*		*		
			5320-239-1269	CKL100V4A <29666>	RIVET,BLIND-ALUMINUM ALLOY... <GR5056-H32>,MECHANICALLY EXPANDED,FLUSH COUNTERSUNK HEAD,<100 DEG>, SELF-PLUGGING SHANK,1/8 IN.DIA,0.172 IN.LG,0.078 IN.GRIP LG		EA			*	*	*		*		
			5320-245-4323	MS20470B4-9 <96906>	RIVET,SOLID-ALUMINUM ALLOY... <GR5056>,UNIVERSAL HEAD, 1/8 IN.DIA,9/16 IN.LG, 0.374 IN.GRIP LG		LB			*	*	*		*		
			5320-252-6307	MS20470B5-22 <96906>	RIVET,SOLID-ALUMINUM ALLOY... <GR5056>,UNIVERSAL HEAD, 5/32 IN.DIA,1-3/8 IN.LG, 1.141 IN.GRIP LG		LB			*	*	*		*		
			5320-270-2790	NAS1526-3 <80205>	PIN,RIVET-ALUMINUM ALLOY,.... PAN HEAD,PROTRUDING HEAD, SWAGE LOCKING,TENSION,PULL TYPE,CLOSE TOLERANCE,3/16 IN.DIA,1.560 IN.LG		EA			*	*	*		*		
			5320-531-0791	NAS1468-7 <80205>	PIN,RIVET-STEEL,PAN HEAD,.... PROTRUDING HEAD,SWAGE LOCKING,TENSION,PULL TYPE, CLOSE TOLERANCE,1/4 IN.DIA, 2.500 IN.LG		EA							*		
			5320-531-0792	NAS1466-4 <80205>	PIN,RIVET-STEEL,PAN HEAD,.... PROTRUDING HEAD,SWAGE LOCKING,TENSION,PULL TYPE, CLOSE TOLERANCE,3/16 IN. DIA,1.690 IN.LG		EA			*	*	*		*		
			5320-531-0793	NAS1468-5 <80205>	PIN,RIVET-STEEL,PAN HEAD,.... PROTRUDING HEAD,SWAGE LOCKING,TENSION,PULL TYPE, CLOSE TOLERANCE,1/4 IN.DIA, 2.250 IN.LG		EA							*		
			5320-582-3268	MS20600AD6W3 <96906>	RIVET-BLIND,MECHANICALLY.....		EA			*	*	*		*		

(1) SOURCE, MAINT AND REC CODE (a) SOURCE CODE	(b) MAINT. LEVEL	(c) REC CODL	(2) FEDERAL STOCK NUMBER	REFERENCE NUMBER	(3) DESCRIPTION	MODELS USABLE ON CH-34C	(4) UNIT OF ISSUE	(5) QTY INC IN UNIT PACK	(6) QTY INC IN UNIT	(7) 30-DAY DS/GS MAINT ALW (a) 1-20	(b) 21-50	(c) 51-100	(8) 1-YR ALW PER 100 EQUIP CNTGCY	(9) DEPOT MAINT ALW PER 100 EQUIP	(10) ILLUSTRATION (a) FIG NO	(b) ITEM NO
					CONTINUED EXPANDED,UNIVERSAL HEAD, SELF-PLUGGING SHANK, SERRATED STEM,ALUMINUM ALLOY <GR 2117-T4> ANODIZED OR CHEMICALLY TREATED FINISH,3/16 X 0.340 MAX LG, 0.126 TO 0.187 GRIP RANGE										BULK	
			5320-582-3269	RV2200-5-6 <98996>	RIVET-BLIND,MECHANICALLY..... EXPANDED,UNIVERSAL HEAD,SELF-PLUGGING SHANK, ALUMINUM ALLOY <GR2117H15> ANODIZED,0.172 X 0.503 MAX LG,0.313 TO 0.375 GRIP RANGE		EA			*	*	*		*		
			5320-582-3270	RV2200-5-3 <98996>	RIVET-BLIND,MECHANICALLY..... EXPANDED,UNIVERSAL HEAD,SELF-PLUGGING SHANK, ALUMINUM ALLOY <GR2117H15> ANODIZED,0.172 X 0.317 MAX LG,0.126 TO 0.187 GRIP RANGE		EA			*	*	*		*		
			5320-582-3271	RV2200-4-2 <98996>	RIVET-BLIND,MECHANICALLY..... EXPANDED,UNIVERSAL HEAD,SELF-PLUGGING SHANK, ALUMINUM ALLOY <GR2117H15> ANODIZED,0.134 X0.232 MAX LG,0.063 TO 0.125 GRIP RANGE		EA			*	*	*		*		
			5320-582-3274	MS20601AD5W2 <96906>	RIVET-BLIND,MECHANICALLY..... EXPANDED,FLUSH COUNTERSUNK HEAD <100 DEG>, SELF-PLUGGING SHANK, SERRATED STEM,<GR 2117-T4>, ANODIZED OR CHEMICALLY TREATED FINISH,5/32 X 0.254 MAX LG, 0.065 TO 0.125 GRIP RANGE		AA			*	*	*		*		
			5320-582-3275	MS20601AD4W5 <96906>	RIVET-BLIND,MECHANICALLY..... EXPANDED,FLUSH COUNTERSUNK HEAD <100 DEG>, SELF-PLUGGING SHANK, SERRATED STEM,ALUMINUM ALLOY <GR 2117-T4>, ANODIZED OR CHEMICALLY TREATED FINISH,1/8 X 0.420 MAX LG, 0.251 TO 0.312 GRIP RANGE		EA			*	*	*		*		
			5320-582-3276	MS20600AD6W4 <96906>	RIVET-BLIND,MECHANICALLY..... EXPANDED UNIVERSAL HEAD, SELF-PLUGGING SHANK, SERRATED STEM,ALUMINUM		EA			*	*	*		*		

(1) SOURCE, MAINT AND REC CODE (a) SOURCE CODE	(b) MAINT LEVEL	(c) REC CODE	(2) FEDERAL STOCK NUMBER	REFERENCE NUMBER	(3) DESCRIPTION	MODELS USABLE ON CH-34C	(4) UNIT OF ISSUE	(5) QTY INC IN UNIT PACK	(6) QTY INC IN UNIT	(7) 30-DAY DS/GS MAINT ALW (a) 1-20	(b) 21-50	(c) 51-100	(8) 1-YR ALW PER 100 EQUIP CNTGCY	(9) DEPOT MAINT ALW PER 100 EQUIP	(10) ILLUSTRATION (a) FIG NO	(b) ITEM NO
					CONTINUED ALLOY <GR 2117-T4>,ANODIZED OR CHEMICALLY TREATED FINISH,3/16 X 0.402 MAX LG, 0.188 TO 0.250 GRIP RANGE										BULK	
			5320-582-3279	RV2200-5-4 <98996>	RIVET-BLIND,MECHANICALLY..... EXPANDED,UNIVERSAL HEAD SELF-PLUGGING SHANK, SERRATED STEM,ALUMINUM ALLOY <GR 2117-T4>, ANODIZED,0.172 X 0.379 MAX LG,0.188 TO 0.250 GRIP RANGE		EA			*	*	*		*		
			5320-582-3288	MS20600AD4W1 <96906>	RIVET,BLIND-MECHANICALLY..... EXPANDED,UNIVERSAL HEAD, SELF-PLUGGING SHANK, SERRATED STEM,ALUMINUM ALLOY <GR 2117-T4>, ANODIZED OR CHEMICALLY TREATED FINISH,1/8 X 0.170 MAX LG,0.000 TO 0.062 GRIP RANGE		VC			*	*	*		*		
			5320-582-3289	MS20600AD5W3 <96906>	RIVET-BLIND,MECHANICALLY..... EXPANDED,UNIVERSAL HEAD, SELF-PLUGGING SHANK, SERRATED STEM,ALUMINUM ALLOY <GR 2117-T4>, ANODIZED OR CHEMICALLY TREATED FINISH,5/32 X 0.317 MAX LG,0.126 TO 0.187 GRIP RANGE		AA			*	*	*		*		
			5320-582-3298	MS20600B4W2 <96906>	RIVET-BLIND,MECHANICALLY..... EXPANDED,UNIVERSAL HEAD, SELF-PLUGGING SHANK, SERRATED STEM,ALUMINUM ALLOY <GR 5056-H32>, ANODIZED OR CHEMICALLY TREATED FINISH,1/8 X 0.232 MAX LG,0.063 IN. TO 0.125 IN. GRIP RANGE		EA			*	*	*		*		
			5320-582-3299	MS20601AD5W3 <96906>	RIVET-BLIND,MECHANICALLY..... EXPANDED,FLUSH COUNTERSUNK HEAD <100 DEG>, SELF-PLUGGING SHANK, SERRATED STEM,ALUMINUM ALLOY <GR 2117-T4>, ANODIZED OR CHEMICALLY TREATED FINISH,5/32 X 0.317 MAX LG, 0.126 TO 0.187 GRIP RANGE		EA			*	*	*		*		
			5320-582-3300	MS20601AD4W3 <96906>	RIVET-BLIND,MECHANICALLY..... EXPANDED,FLUSH COUNTERSUNK		EA			*	*	*		*		

(1) SOURCE, MAINT AND REC CODE (a) SOURCE CODE	(b) MAINT LEVEL	(c) REC CODE	(2) FEDERAL STOCK NUMBER	REFERENCE NUMBER	(3) DESCRIPTION	MODELS USABLE ON CH-34C	(4) UNIT OF ISSUE	(5) QTY INC IN UNIT PACK	(6) QTY INC IN UNIT	(7) 30-DAY DS GS MAINT ALW (a) 1-20	(b) 21-50	(c) 51-100	(8) 1-YR ALW PER 100 EQUIP CNTGCY	(9) DEPOT MAINT ALW PER 100 EQUIP	(10) ILLUSTRATION (a) FIG NO	(b) ITEM NO
					CONTINUED HEAD <100 DEG>, SELF-PLUGGING SHANK, SERRATED STEM, ALUMINUM ALLOY <GR 2117-T4>, ANODIZED OR CHEMICALLY TREATED FINISH, 1/8 X 0.295 MAX LG, 0.126 TO 0.187 GRIP RANGE										BULK	
			5320-582-3301	MS20600AD6W5 <96906>	RIVET-BLIND, MECHANICALLY..... EXPANDED, UNIVERSAL HEAD, SELF-PLUGGING SHANK, SERRATED STEM, ALUMINUM ALLOY <GR 2117-T4>, ANODIZED OR CHEMICALLY TREATED FINISH, 3/16 X 0.465 MAX LG, 0.25 TO 0.312 GRIP RANGE		EA			*	*	*		*		
			5320-582-3302	MS20600AD5W2 <96906>	RIVET-BLIND, MECHANICALLY..... EXPANDED, UNIVERSAL HEAD, SELF-PLUGGING SHANK, SERRATED STEM, ALUMINUM ALLOY <GR 2117-T4>, ANODIZED OR CHEMICALLY TREATED FINISH, 5/32 X 0.254 MAX LG, 0.063 TO 0.25 GRIP RANGE		EA			*	*	*		*		
			5320-582-3303	MS20600AD4W5 <96906>	RIVET-BLIND, MECHANICALLY..... EXPANDED, UNIVERSAL HEAD, SELF-PLUGGING SHANK, SERRATED STEM, ALUMINUM ALLOY <GR 2117-T4>, ANODIZED OR CHEMICALLY TREATED FINISH, 1/8 X 0.420 MAX LG, 0.251 TO 0.312 GRIP RANGE		EA			*	*	*		*		
			5320-582-3495	MS20600AD4W6 <96906>	RIVET-BLIND, MECHANICALLY..... EXPANDED, UNIVERSAL HEAD, SELF-PLUGGING SHANK, SERRATED STEM, ALUMINUM ALLOY <GR 2117-T4>, ANODIZED OR CHEMICALLY TREATED FINISH, 1/8 X 0.487 MAX LG, 0.313 TO 0.375 GRIP RANGE		EA			*	*	*		*		
			5320-582-3497	MS20600AD5W5 <96906>	RIVET-BLIND, MECHANICALLY..... EXPANDED, UNIVERSAL HEAD, SELF-PLUGGING SHANK, SERRATED STEM, ALUMINUM ALLOY <GR 2117-T4>, ANODIZED OR CHEMICALLY TREATED FINISH, 5/32 X 0.441 MAX LG, 0.251 TO 0.312 GRIP RANGE		EA			*	*	*		*		
			5320-582-3498	MS20600AD5W6 <96906>	RIVET-BLIND, MECHANICALLY..... EXPANDED, UNIVERSAL HEAD, SELF-PLUGGING SHANK,		EA			*	*	*		*		

(1) SOURCE, MAINT AND REC CODE (a) SOURCE CODE	(b) MAINT LEVEL	(c) REC CODE	(2) FEDERAL STOCK NUMBER	REFERENCE NUMBER	(3) DESCRIPTION	MODELS USABLE ON CH-34C	(4) UNIT OF ISSUE	(5) QTY INC IN UNIT PACK	(6) QTY INC IN UNIT	(7) 30-DAY DS/GS MAINT ALW (a) 1-20	(b) 21-50	(c) 51-100	(8) 1-YR ALW PER 100 EQUIP CNTGCY	(9) DEPOT MAINT ALW PER 100 EQUIP	(10) ILLUSTRATION (a) FIG NO	(b) ITEM NO
					CONTINUED										BULK	
					SERRATED STEM,ALUMINUM ALLOY <GR 2117-T4>,ANODIZED OR CHEMICALLY TREATED FINISH,5/32 X 0.503 MAX LG, 0.313 TO 0.375 GRIP RANGE											
			5320-582-3499	MS20600AD6W6 <96906>	RIVET-BLIND,MECHANICALLY..... EXPANDED,UNIVERSAL HEAD, SELF-PLUGGING SHANK, SERRATED STEM,ALUMINUM ALLOY <GR 2117-T4>,ANODIZED OR CHEMICALLY TREATED FINISH,3/16 X 0.527 MAX LG, 0.313 TO 0.375 GRIP RANGE		HD			*	*	*		*		
			5320-582-3502	MS20601AD4W4 <96906>	RIVET-BLIND,MECHANICALLY..... EXPANDED,FLUSH COUNTERSUNK HEAD <100 DEG>,SELF-PLUGGING SHANK,SERRATED STEM,ALUMINUM ALLOY <GR 2117-T4>,ANODIZED OR CHEMICALLY TREATED FINISH, 1/8 X 0.357 MAX LG,0.188 TO 0.250 GRIP RANGE		EA			*	*	*		*		
			5320-582-3503	MS20601AD5W4 <96906>	RIVET-BLIND,MECHANICALLY..... EXPANDED,FLUSH COUNTERSUNK HEAD <100 DEG>, SELF-PLUGGING SHANK, SERRATED STEM,ALUMINUM ALLOY <GR 2117-T4>,ANODIZED OR CHEMICALLY TREATED FINISH,5/32 X 0.379 MAX LG, 0.188 TO 0.250 GRIP RANGE		AA			*	*	*		*		
			5320-582-3504	MS20601AD5W5 <96906>	RIVET-BLIND,MECHANICALLY..... EXPANDED,FLUSH COUNTERSUNK HEAD <100 DEG>, SELF-PLUGGING SHANK, SERRATED STEM,ALUMINUM ALLOY <GR 2117-T4>,ANODIZED OR CHEMICALLY TREATED FINISH,5/32 X 0.441 MAX LG, 0.251 TO 0.312 GRIP RANGE		AA			*	*	*		*		
			5320-582-3516	RV2200-4-5 <98996>	RIVET-BLIND,MECHANICALLY..... EXPANDED,UNIVERSAL HEAD, SELF-PLUGGING SHANK, SERRATED STEM,ALUMINUM ALLOY <GR 2117-T4>, ANODIZED,0.134 X 0.420 MAX LG,0.251 TO 0.312 GRIP RANGE		EA			*	*	*		*		
			5320-582-3517	RV2200-4-4 <98996>	RIVET-BLIND,MECHANICALLY..... EXPANDED,UNIVERSAL HEAD, SELF-PLUGGING SHANK,		EA			*	*	*		*		

(1) SOURCE, MAINT AND REC CODE (a) SOURCE CODE	(b) MAINT LEVEL	(c) REC CODE	(2) FEDERAL STOCK NUMBER	REFERENCE NUMBER	(3) DESCRIPTION	MODELS USABLE ON CH-34C	(4) UNIT OF ISSUE	(5) QTY INC IN UNIT PACK	(6) QTY INC IN UNIT	(7) 30-DAY DS/GS MAINT ALW (a) 1-20	(b) 21-50	(c) 51-100	(8) 1 YR ALW PER 100 EQUIP CNTGCY	(9) DEPOT MAINT ALW PER 100 EQUIP	(10) ILLUSTRATION (a) FIG NO	(b) ITEM NO
					CONTINUED SERRATED STEM,ALUMINUM ALLOY <GR 2117-T4>, ANODIZED,0.134 X 0.357 MAX LG,0.188 TO 0.250 GRIP RANGE										BULK	
			5320-582-3520	RV250-5-1 <98996>	RIVET,BLIND-MECHANICALLY..... EXPANDED,UNIVERSAL HEAD, SELF-PLUGGING SHANK, SERRATED STEM,ALUMINUM ALLOY <GR 5056-H32>, ANODIZED OR CHEMICALLY TREATED FINISH,5/32 X 0.192 MAX LG,0.000 TO 0.062 GRIP RANGE		EA			*	*	*		*		
			5320-582-3521	MS20600B4W3 <96906>	RIVET-BLIND,MECHANICALLY..... EXPANDED,UNIVERSAL HEAD, SELF-PLUGGING SHANK, SERRATED STEM,ALUMINUM ALLOY <GR 5056-1132>, ANODIZED OR CHEMICALLY TREATED FINISH,1/8 X 0.295 MAX LG,0.126 TO 0.187 GRIP RANGE		EA			*	*	*		*		
			5320-582-3522	MS20601AD6W5 <96906>	RIVET-BLIND,MECHANICALLY..... EXPANDED,FLUSH COUNTERSUNK HEAD <100 DEG>, SELF-PLUGGING SHANK, SERRATED STEM,ALUMINUM ALLOY <GR 2117-T4>,ANODIZED OR CHEMICALLY TREATED FINISH,3/16 X 0.465 MAX LG, 0.251 TO 0.312 GRIP RANGE		EA			*	*	*		*		
			5320-582-3523	MS20601AD6W4 <96906>	RIVET,BLIND-MECHANICALLY..... EXPANDED,FLUSH COUNTERSUNK HEAD <100 DEG>, SELF-PLUGGING SHANK, SERRATED STEM,ALUMINUM ALLOY <GR5056H32>,ANODIZED OR CHEMICALLY TREATED FINISH,3/16 IN.DIA,0.402 IN.LG,0.188 IN.TO 0.250 IN. GRIP RANGE		EA			*	*	*		*		
			5320-582-7783	HS80A <73197>	COLLAR,PIN RIVET.....		EA			*	*	*		*		
			5320-616-0377	MS20601B5W2 <96906>	RIVET,BLIND-ALUMINUM ALLOY... <GR5056>,PULL STEM, SELF-PLUGGING,FLAT HEAD, 5/32 IN.DIA,0.063 IN.TO 0.125 IN.GRIP LG,SERRATED STEM		EA			*	*	*		*		
			5320-616-4353	MS20600B6W2 <96906>	RIVET,BLIND-ALUMINUM ALLOY... <GR5056>,PULL STEM,		EA			*	*	*		*		

(1) SOURCE, MAINT AND REC CODE (a) SOURCE CODE	(b) MAINT LEVEL	(c) REC CODE	(2) FEDERAL STOCK NUMBER	REFERENCE NUMBER	(3) DESCRIPTION	MODELS USABLE ON CH-34C	(4) UNIT OF ISSUE	(5) QTY INC IN UNIT PACK	(6) QTY INC IN UNIT	(7) 30-DAY DS/GS MAINT ALW (a) 1-20	(b) 21-50	(c) 51-100	(8) 1-YR ALW PER 100 EQUIP CNTGCY	(9) DEPOT MAINT ALW PER 100 EQUIP	(10) ILLUSTRATION (a) FIG NO	(b) ITEM NO
					CONTINUED SELF-PLUGGING,PROTRUDING HEAD,3/16 IN.DIA,0.063 IN. TO 0.125 IN.GRIP LG, SERRATED STEM										BULK	
			5320-616-5855	OCKL0100V5A <29666>	RIVET,BLIND-ALUMINUM ALLOY... <GR5056>,FLUSH COUNTERSUNK HEAD,MECHANICALLY EXPANDED, SELF-PLUGGING SHANK,11/64 IN.DIA,0.236 IN.LG		EA			*	*	*		*		
			5320-616-5860	0100V4A <29666>	RIVET,BLIND-ALUMINUM ALLOY,.. ANODIZED,MECHANICALLY EXPANDED,FLUSH COUNTERSUNK HEAD <100 DEG>, SELF-PLUGGING SHANK,9/64 IN.DIA,0.173 IN.LG,0.078 IN.GRIP LG		EA			*	*	*		*		
			5320-637-4279	HS70-5 <73197>	COLLAR,RIVET PIN.....		EA			*	*	*		*		
			5320-637-5005	RV2200-6-2 <98996>	RIVET,BLIND-ALUMINUM ALLOY... UNIVERSAL HEAD,MECHANICALLY EXPANDED,SELF-PLUGGING SHANK,0.203 IN.DIA,0.277 IN.LG		EA			*	*	*		*		
			5320-637-5012	RV2200-5-2 <98996>	RIVET,BLIND-ALUMINUM ALLOY... UNIVERSAL HEAD,MECHANICALLY EXPANDED,SELF-PLUGGING SHANK,0.172 IN.DIA, 0.254 IN.LG,0.063 IN.TO 0.125 IN.GRIP RANGE		EA			*	*	*		*		
			5320-637-6025	NAS1526-16 <80205>	PIN,RIVET-ALUMINUM ALLOY..... PAN HEAD,PROTRUDING HEAD, SWAGE LOCKING,TENSION,PULL TYPE,CLOSE TOLERANCE,3/16 IN.DIA,3.190 IN.LG		EA			*	*	*		*		
			5320-638-4307	MS20470B6-4 <96906>	RIVET,SOLID-UNIVERSAL HEAD... ALUMINUM ALLOY,STRAIGHT SHANK,0.375 IN.DIA, 1/4 IN.LG		LB			*	*	*		*		
			5320-685-0320	MS20601AD6W2 <96906>	RIVET,BLIND-MECHANICALLY..... EXPANDED,FLUSH COUNTERSUNK HEAD <100 DEG>,SERRATED STEM,SELF-PLUGGING SHANK, ALUMINUM ALLOY <GR2117-H15> ANODIZED,OR CHEMICALLY TREATED FINISH,3/16 IN.DIA,0.277 IN.LG		EA			*	*	*		*		
			5320-702-3221	NAS1466-14 <80205>	PIN,RIVET-STEEL,PAN HEAD..... PROTRUDING HEAD,SWAGE LOCKING,CLOSE TOLERANCE, 3/16 IN.DIA,1.108 IN.LG		EA			*	*	*		*		
			5320-725-6927	MS20615-5M7 <96906>	RIVET,SOLID-NICKEL COPPER.... ALLOY,UNIVERSAL HEAD,		LB			*	*	*		*		

(1) SOURCE, MAINT AND REC CODE (a) SOURCE CODE	(b) MAINT LEVEL	(c) REC CODE	(2) FEDERAL STOCK NUMBER	REFERENCE NUMBER	(3) DESCRIPTION	MODELS USABLE ON CH-34C	(4) UNIT OF ISSUE	(5) QTY INC IN UNIT PACK	(6) QTY INC IN UNIT	(7) 30-DAY DS/GS MAINT ALW (a) 1-20	(b) 21-50	(c) 51-100	(8) 1-YR ALW PER 100 EQUIP CNTGCY	(9) DEPOT MAINT ALW PER 100 EQUIP	(10) ILLUSTRATION (a) FIG NO	(b) ITEM NO
					CONTINUED ANNEALED,0.156 IN.DIA, 0.438 IN.LG										BULK	
			5320-753-3809	MS20600AD6W9 <96906>	RIVET,BLIND-ALUMINUM ALLOY,.. MECHANICALLY EXPANDED TYPE, UNIVERSAL HEAD,0.187 IN. DIA,0.715 IN.LG		EA			*	*	*		*		
			5320-753-3830	MS20613-4P5 <96906>	RIVET,SOLID-STEEL,UNIVERSAL.. HEAD,ANNEALED,STRAIGHT SHANK W/CHAMFERED TIP,0.125 IN.DIA,0.312 IN.LG, COMPOSITION C1010		LB			*	*	*		*		
			5320-781-8609	NAS1670-4K8 <80205>	RIVET,BLIND-STEEL,CADMIUM.... PLATED,MECHANICALLY EXPANDED,FLUSH COUNTERSUNK HEAD,4 VANE RECESS, SELF-PLUGGING SHANK W/CRES SLEEVE,W/MILLED DRIVING FLATS ON SCREW,0.260 IN. DIA,1.256 IN.LG,0.470 IN. TO 0.531 IN.GRIP LG		EA							*		
			5320-800-7860	NAS1465-5 <80205>	PIN,RIVET-STEEL,PAN HEAD,.... PROTRUDING HEAD,SWAGE LOCKING,TENSION,PULL TYPE, CLOSE TOLERANCE,5/32 IN. DIA,1.880 IN.LG		EA							*		
			5320-808-7822	MS20470AD3-8 <96906>	RIVET,SOLID-ALUMINUM ALLOY... <GR2117>,UNIVERSAL HEAD, 3/32 IN.DIA,1/2 IN.LG,0.359 IN.GRIP LG		LB			*	*	*		*		
			5320-819-5690	MS20613-3C3 <96906>	RIVET,SOLID-UNIVERSAL HEAD,.. CRES,0.094 IN.DIA,0.188 IN. LG,CONDITION A		EA			*	*	*		*		
			5320-929-9305	MS20426B4-24 <96906>	RIVET,SOLID-ALUMINUM ALLOY... <GR5056H32>,FLAT HEAD,1/8 IN.DIA,1-1/2 IN.LG, 1.312 IN.GRIP LG		LB			*	*	*		*		
			5320-951-3216	MS20613-6P12 <96906>	RIVET,SOLID-UNIVERSAL HEAD,.. STEEL,CARBON,3/16 IN.DIA, 3/4 IN.LG		EA							*		
			5320-993-7108	MS20615-6M8 <96906>	RIVET,SOLID-UNIVERSAL HEAD,.. MONEL,ANNEALED,3/16 IN.DIA, 1/2 IN.LG		EA			*	*	*		*		
			5320-994-7076	MS20613-4P4 <96906>	RIVET,SOLID-UNIVERSAL HEAD,.. STEEL,CARBON,1/8 IN.DIA,1/4 IN.LG		LB			*	*	*		*		
			5325-171-6387	AN931A14-20 <88044>	GROMMET,RUBBER-SYNTHETIC,.... 1-5/8 IN.OD,3/16 IN.THK		EA			*	*	*		*		
			5325-174-5315	MS35489-7 <96906>	GROMMET,RUBBER-SYNTHETIC,.... 1/4 IN.ID,1 IN.OD		EA			*	*	*		*		
			5325-174-9008	MS35489-15 <96906>	GROMMET,RUBBER-SYNTHETIC,1/2. IN.ID,1-1/2 IN.OD		EA			*	*	*		*		

(1) SOURCE, MAINT AND REC CODE (a) SOURCE CODE	(b) MAINT LEVEL	(c) REC CODE	(2) FEDERAL STOCK NUMBER	REFERENCE NUMBER		(3) DESCRIPTION	MODELS USABLE ON CH-34C	(4) UNIT OF ISSUE	(5) QTY INC IN UNIT PACK	(6) QTY INC IN UNIT	(7) 30-DAY DS/GS MAINT ALW (a) 1-20	(b) 21-50	(c) 51-100	(8) 1-YR ALW PER 100 EQUIP CNTGCY	(9) DEPOT MAINT ALW PER 100 EQUIP	(10) ILLUSTRATION (a) FIG NO	(b) ITEM NO
			5325-174-9038	MS35489-20	<96906>	GROMMET,RUBBER-SYNTHETIC,.... 3/4 IN.ID,1-3/8 IN.OD,3/8 IN.THK		EA			*	*	*		*	BULK	
			5325-202-1604	AN931C16-30	<88044>	GROMMET,RUBBER-SYNTHETIC,1... IN.ID		EA			*	*	*		*		
			5325-250-6859	AN227-14	<88044>	POST,SNAP FASTENER..... NICKEL PLATED,0.495 IN.OD BBL,0.179 IN.H BBL,0.110 IN.OD FLANGE		EA			*	*	*		*		
			5325-262-7834	901	<36378>	GROMMET,RUBBER-1/8 IN.ID,.... 11/32 IN.OD,1/16 IN.THK		EA			*	*	*		*		
			5325-263-6651	MS35489-12	<96906>	GROMMET,RUBBER-SYNTHETIC,3/8. IN.ID,1 IN.OD		EA			*	*	*		*		
			5325-270-8890	MS35489-22	<96906>	GROMMET,RUBBER-SYNTHETIC,5/8. IN.ID,7/8 IN.OD		EA			*	*	*		*		
			5325-276-4978	AN227-9B	<88044>	POST,SNAP FASTENER-BRASS,.... 0.281 IN.LG,0.156 IN.DIA OF SHANK,0.563 IN.DIA OF BASE		EA			*	*	*		*		
			5325-276-6089	MS35489-16	<96906>	GROMMET,RUBBER-SYNTHETIC,.... 9/16 IN.ID,1-1/16 IN.OD, 5/16 IN.THK		EA			*	*	*		*		
			5325-276-6096	MS35489-74	<96906>	GROMMET,RUBBER-SYNTHETIC,.... 9/16 IN.ID,1-1/16 IN.OD, 5/16 IN.THK		EA			*	*	*		*		
			5325-276-6100	MS35489-14	<96906>	GROMMET,RUBBER-SYNTHETIC,.... 1/2 IN.ID,1-1/16 IN.OD,5/16 IN.THK		EA			*	*	*		*		
			5325-276-6343	MS35489-23	<96906>	GROMMET,RUBBER-SYNTHETIC,.... 1 IN.ID,1-3/4 IN.OD,7/16 IN.THK		EA			*	*	*		*		
			5325-290-1960	MS35489-27	<96906>	GROMMET,RUBBER-SYNTHETIC,.... 1-1/2 IN.ID,2-1/8 IN.OD, 7/16 IN.THK		EA			*	*	*		*		
			5325-290-6163	MS35489-13	<96906>	GROMMET,RUBBER-SYNTHETIC,7/16 IN.ID,15/16 IN.OD		EA			*	*	*		*		
			5325-291-0217	FA1036	<72171>	STUD ASSEMBLY,TURNLOCK..... FASTENER-STUD HEAD,0.347 IN.OD,0.296 IN.THK OF MATERIAL		EA			*	*	*		*		
			5325-291-9366	MS35489-11	<96906>	GROMMET,RUBBER-SYNTHETIC,3/8. IN.ID,7/8 IN.OD		LL			*	*	*		*		
			5330-054-6880	AN6230B22	<88044>	PACKING,PREFORMED-RUBBER,.... SYNTHETIC,4-1/4 IN.ID,4-1/2 IN.OD,1/8 IN.THK		EA			*	*	*		*		
			5330-171-5073	MS28782-29	<96906>	RETAINER,PACKING-TEFLON,..... 1.625 IN.ID,1.997 IN.OD, 0.036 IN.THK		EA			*	*	*		*		
			5330-171-5099	MS28783-6	<96906>	RETAINER,PACKING-TEFLON,..... 2.250 IN.ID,2.492 IN.OD, 0.029 IN.THK		EA			*	*	*		*		
			5330-171-5889	AN6246-11	<88044>	RETAINER,PACKING-PLASTIC,.... 0.562 IN.ID,0.740 IN.OD,		AV			*	*	*		*		

(1) SOURCE, MAINT AND REC CODE (a) SOURCE CODE	(b) MAINT LEVEL	(c) REC CODE	(2) FEDERAL STOCK NUMBER	REFERENCE NUMBER	(3) DESCRIPTION	MODELS USABLE ON CH-34C	(4) UNIT OF ISSUE	(5) QTY INC IN UNIT PACK	(6) QTY INC IN UNIT	(7) 30-DAY DS GS MAINT ALW (a) 1-20	(b) 21-50	(c) 51-100	(8) 1-YR ALW PER 100 EQUIP CNTGCY	(9) DEPOT MAINT ALW PER 100 EQUIP	(10) ILLUSTRATION (a) FIG NO	(b) ITEM NO
					CONTINUED										BULK	
					0.058 IN.H											
			5330-171-5902	MS28782-37 <96906>	RETAINER,PACKING-PLASTIC,.... 2.625 IN.ID,2.997 IN.OD, 0.072 IN.THK		EA			*	*	*		*		
			5330-171-6757	MS28782-22 <96906>	RETAINER,PACKING-TEFLON,..... 1.188 IN.ID,1.432 IN.OD, 0.029 IN.THK		EA			*	*	*		*		
			5330-171-6758	MS28782-23 <96906>	RETAINER,PACKING-TEFLON,..... 1.250 IN.ID,1.494 IN.OD, 0.029 IN.THK		EA			*	*	*		*		
			5330-171-6768	MS28782-13 <96906>	RETAINER,PACKING-TEFLON,..... 0.688 IN.ID,0.866 IN.OD, 0.029 IN.THK		EA			*	*	*		*		
			5330-171-6770	MS28782-33 <96906>	RETAINER,PACKING-TEFLON,..... 2.125 IN.ID,2.497 IN.OD, 0.036 IN.LG		EA			*	*	*		*		
			5330-171-7380	MS28782-19 <96906>	RETAINER,PACKING-TEFLON,..... 1 IN.ID,1.244 IN.OD, 0.029 IN.THK		EA			*	*	*		*		
			5330-182-1288	(81349)	CORK AND RUBBER SHEET-18..... IN.W,36 IN.LG,1/16 IN.THK, MIL-6-6183,CLASS 1		SH			*	*	*		*		
			5330-196-5314	AN6227B26 <88044>	PACKING,PREFORMED-RUBBER..... SYNTHETIC,1-7/16 IN.ID, 1-11/16 IN.OD,1/8 IN.THK		EA			*	*	*		*		
			5330-196-5381	AN6227B18 <88044>	PACKING,PREFORMED-NOMINAL,... 1/2 IN.ID,11/16 IN.OD, 3/32 IN.W		EA							*		
			5330-198-6163	AN6227B14 <88044>	PACKING,PREFORMED-RUBBER..... SYNTHETIC,3/4 IN.ID, 15/16 IN.OD,3/32 IN.THK		EA			*	*	*		*		
			5330-198-6204	AN6227B49 <88044>	PACKING,PREFORMED-RUBBER,.... SYNTHETIC,4-1/8 IN.ID,4-1/2 IN.OD,3/16 IN.THK		EA							*		
			5330-242-6637	AN123860 <88044>	PACKING-PREFORMED,SYNTHETIC.. RUBBER,0.250 IN. ID,0.372 IN. OD,0.073 IN. THK		EA			*	*	*		*		
			5330-242-6638	AN123862 <88044>	PACKING,PREFORMED-RUBBER..... SYNTHETIC,0.359 IN.ID,0.505 IN.OD,0.073 IN.THK		EA			*	*	*		*		
			5330-252-9165	5473 <75511>	GASKET-CORK,5/8 IN.ID,1/32... IN.THK,9/64 IN.DIA OF BOLT HOLES		EA			*	*	*		*		
			5330-256-0195	AN6230B9 <88044>	PACKING-PREFORMED,SYNTHETIC.. RUBBER,2-5/8 IN.ID,2-7/8 IN. OD,1/8 IN. THK		EA			*	*	*		*		
			5330-285-9847	MS28778-32 <96906>	PACKING-PREFORMED,SYNTHETIC.. RUBBER,2.337 IN.ID,2.573 IN.OD,0.118 IN.THK		EA							*		
			5330-290-9393	AN123931 <88044>	PACKING,PREFORMED-RUBBER,.... SYNTHETIC,9.250 IN.ID,9.500		EA			*	*	*		*		

(1) SOURCE, MAINT AND REC CODE (a) SOURCE CODE	(b) MAINT LEVEL	(c) REC CODE	(2) FEDERAL STOCK NUMBER	REFERENCE NUMBER	(3) DESCRIPTION	MODELS USABLE ON CH-34C	(4) UNIT OF ISSUE	(5) QTY INC IN UNIT PACK	(6) QTY INC IN UNIT	(7) 30-DAY DS/GS MAINT ALW (a) 1-20	(b) 21-50	(c) 51-100	(8) 1-YR ALW PER 100 EQUIP CNTGCY	(9) DEPOT MAINT ALW PER 100 EQUIP	(10) ILLUSTRATION (a) FIG NO	(b) ITEM NO
					CONTINUED										BULK	
					IN.OD,0.135 IN.THK											
			5330-292-0570	MS28775-210 <96906>	PACKING,PREFORMED-RUBBER,.... SYNTHETIC,0.734 IN.ID,1.012 IN.OD,0.139 IN.THK		EA			*	*	*		*		
			5330-297-9990	MS28775-222 <96906>	PACKING,PREFORMED-SYNTHETIC.. RUBBER,1.484 IN.ID,1.762 IN.OD,0.139 IN.THK		EA			*	*	*		*		
			5330-474-8638	EAB575 <81996>	OIL SEAL.....		EA			*	*	*		*		
			5330-474-8829	63X233 <73680>	OIL SEAL.....		EA			*	*	*		*		
			5330-474-8895	EAB530 <81996>	OIL SEAL.....		EA			*	*	*		*		
			5330-530-4341	MS28932-1 <96906>	PACKING MATERIAL-FELT,SOLID,. 0.188 IN.W,60 IN.LG,0.125 IN.THK,END SCARFED AT 45 DEG ANGLE TO PROVIDE MATING ENDS		SP			*	*	*		*		
			5330-576-3206	MS28774-114 <96906>	RETAINER,PACKING-TEFLON..... 0.640 IN.ID,0.814 IN.OD, 0.052 IN.THK		EA			*	*	*		*		
			5330-579-3163	MS28775-214 <96906>	PACKING,PREFORMED-RUBBER,.... SYNTHETIC,0.984 IN.ID		EA			*	*	*		*		
			5330-579-7916	MS28775-115 <96906>	PACKING,PREFORMED-RUBBER,.... SYNTHETIC,0.674 IN.ID,0.880 IN.OD,0.103 IN.THK		EA			*	*	*		*		
			5330-582-2108	MS28774-334 <96906>	RETAINER,PACKING..... TETRAFLUOROETHYLENE,2.643 IN.ID,3.011 IN.OD,0.075 IN. THK		EA			*	*	*		*		
			5330-582-2856	MS9020-08 <96906>	PACKING,PREFORMED-RUBBER,.... SYNTHETIC,0.639 IN.ID,0.819 IN.OD,0.090 IN.THK		EA			*	*	*		*		
			5330-585-1064	MS29561-012 <96906>	PACKING,PREFORMED-RUBBER,.... SYNTHETIC,0.364 IN.ID,0.504 IN.OD,0.070 IN.H		EA			16	40	80		*		
			5330-599-0523	AN123898 <88044>	PACKING,PREFORMED-RUBBER,.... SYNTEITIC,3.500 IN.ID,3.750 IN.OD,0.143 IN.THK		EA			*	*	*		*		
			5330-599-7708	95 <75165>	ASBESTOS SHEET,WOVEN..... SYNTHETIC RUBBER COATING & FILLER,1/16 IN.THK,36 IN.W		IN			*	*	*		*		
			5330-641-0231	MS28775-216 <96906>	PACKING,PREFORMED-5-3/8 IN... ID,5-5/8 IN.OD,1/8 IN.THK		EA			*	*	*		*		
			5330-663-7151	MS28782-32 <96906>	RETAINER,PACKING-TEFLON,2.... IN.ID,2.372 IN.OD,0.036 IN. THK		EA			*	*	*		*		
			5330-701-5772	21278-2366 <73680>	SEAL,PLAIN,ENCASED.....		EA							*		
			5330-752-1558	7521558 <00000>	PACKING,PREFORMED-RUBBER,.... SYNTHETIC,3/16 IN.ID,5/16 OD,1/16 IN.H		EA							*		
			5330-805-8380	71X7095 <73680>	SEAL,PLAIN,ENCASED-STEEL..... SYNTHETIC RUBBER ANGULAR ELEMENT,3.500 IN.SHAFT DIA,		EA			*	*	*		*		

(1) SOURCE, MAINT AND REC CODE (a) SOURCE CODE	(b) MAINT LEVEL	(c) REC CODE	(2) FEDERAL STOCK NUMBER	REFERENCE NUMBER	(3) DESCRIPTION	MODELS USABLE ON CH-34C	(4) UNIT OF ISSUE	(5) QTY INC IN UNIT PACK	(6) QTY INC IN UNIT	(7) 30-DAY DS/GS MAINT ALW (a) 1-20	(b) 21-50	(c) 51-100	(8) 1-YR ALW PER 100 EQUIP CNTGCY	(9) DEPOT MAINT ALW PER 100 EQUIP	(10) ILLUSTRATION (a) FIG NO	(b) ITEM NO
					CONTINUED 4.003 IN.BORE DIA, 0.250 IN.W										BULK	
			5330-853-6655	MS29561-243 <96906>	PACKING,PREFORMED-RUBBER..... SYNTHETIC,4.109 IN.ID, 4.387 IN.OD,0.139 IN.H		EA			*	*	*		*		
			5330-883-8218	MS35769-10 <96906>	GASKET-ASBESTOS,COPPER,9/16.. IN.ID,13/16 IN.OD,3/32 IN. THK		EA			*	*	*		*		
			5330-948-6602	JM150-12A <75165>	PACKING MATERIAL.....		FT			*	*	*		*		
			5340-057-2625	MS20257P1-3600 <96906>	HINGE,BUTT-ALUMINUM LEAVES... REMOVABLE CRES PIN, NONRISING,CHAMFERED TOP END,W/73 KNUCKLES,0.375 IN. TRANSVERSELY TO HINGE PIN, 36 IN.PARALLEL TO HINGE PIN,0.032 IN.THK		EA			*	*	*		*		
			5340-061-1812	MS2125183L <96906>	TURNBUCKLE BODY-BRASS,..... NO.10-32 NF,3/32 IN.DIA		EA			*	*	*		*		
			5340-141-6433	AN490HT10R <88044>	ROD END,EXTERNALLY THREADED.. STEEL,5/16 IN.-24 NF,1 IN. LG		EA			*	*	*		*		
			5340-200-7579	AN8008D5 <88044>	MOUNT,RESILIENT-VIBRATION,... 1-3/4 IN.SQ,0.257 IN.HOLE DIA,0.625 IN.H,4 MTG HOLES, 0.166 IN.DIA,LOAD RATING, 2 LB		EA			*	*	*		*		
			5340-257-0198	AN996-32 <88044>	RING,RETAINING-STEEL,..... INTERNAL & EXTERNAL,2IN.ID, 2.160 IN.OD,0.080 IN.THK		EA							*		
			5340-282-1661	RS106 <77668>	RING,RETAINING.....		EA			*	*	*		*		
			5340-285-7010	AN742D6 <88044>	CLAMP,LOOP-ALUMINUM ALLOY.... 3/8 IN.ID		EA			*	*	*		*		
			5340-286-2458	MS21208C4-20 <96906>	INSERT,SCREW THREAD-CRES..... 1/4 IN.-20 NC,0.330 IN.OD, 1/2 IN.LG,COILED WIRE TYPE		EA							*		
			5340-291-3493	MS21208F6-10 <96906>	INSERT,SCREW THREAD-CRES,.... 3/8 IN.-24 NF,3/8 IN.LG		EA							*		
			5340-313-6846	A5934-51 <78553>	CLAMP ASSEMBLY,BATTERY..... OVERFLOW		EA			*	*	*		*		
			5340-433-3269	NAS815-8A <80205>	PLUG,PROTECTIVE,DUST AND..... MOISTURE SEAL-VIRGIN POLYETHYLENE,3/4 IN.-16NF, FOR 1/2 IN.TUBE		EA			*	*	*		*		
			5340-474-3603	6335 <03488>	SEAL,LEAD-3/8 IN.OD,FOR..... 1/16 IN.DIA WIRE		EA			*	*	*		*		
			5340-487-5671	645K6-2 <89944>	GASKET,SEALING.....		EA			*	*	*		*		
			5340-513-0907	A10493 <35662>	STRAP,RETAINER,STEEL.....		EA							*		
			5340-514-1449	NAS50-306 <80205>	RING,RETAINING-STEEL,..... INTERNAL, 3.310 IN. OD, 0.112 IN. THK		EA			*	*	*		*		
			5340-530-5354	AN665-10R <88044>	CLEVIS,ROD END-STEEL,.....		EA			*	*	*		*		

(1) SOURCE, MAINT AND REC CODE (a) SOURCE CODE	(b) MAINT LEVEL	(c) REC CODE	(2) FEDERAL STOCK NUMBER	REFERENCE NUMBER	(3) DESCRIPTION	MODELS USABLE ON CH-34C	(4) UNIT OF ISSUE	(5) QTY INC IN UNIT PACK	(6) QTY INC IN UNIT	(7) 30-DAY DS/GS MAINT ALW (a) 1-20	(b) 21-50	(c) 51-100	(8) 1-YR ALW PER 100 EQUIP CNTGCY	(9) DEPOT MAINT ALW PER 100 EQUIP	(10) ILLUSTRATION (a) FIG NO	(b) ITEM NO
					CONTINUED NO.6-40 NF,INTERNAL,1/4 IN.LG										BULK	
			5340-533-3491	JH12973 <31435>	BUSHING,GENERATOR.....		EA							*		
			5340-533-3510	EAB700-2 <81996>	CLAMP,SUPPORT.....		EA			*	*	*		*		
			5340-533-3513	EAB700-6 <81996>	CLAMP,LOOP.....		EA			*	*	*		*		
			5340-533-3514	EAB700-7 <81996>	CLAMP,SUPPORT.....		EA							*		
			5340-533-3515	EAB700-8 <81996>	CLAMP,LOOP.....		EA			*	*	*		*		
			5340-533-3618	EAB700-14 <81996>	CLAMP,SUPPORT.....		EA			*	*	*		*		
			5340-544-2294	645K15D <89944>	RING,RETAINING.....		EA			*	*	*		*		
			5340-579-6359	MS28042-2 <96906>	CLAMP,INSTRUMENT MOUNTING.... 1-3/4 IN.ID,3-1/2 IN.OD, 3-13/16 IN.LG,NO.8-32 NC		EA			*	*	*		*		
			5340-598-5416	AN3420-12 <88044>	BUSHING,RUBBER-SYNTHETIC,.... 0.625 IN.ID,1.064 IN.OD, 2-1/4 IN.LG		EA							*		
			5340-614-3595	MS20253-2-1487 <96906>	ROD,STRAIGHT,HEADLESS-CRES,.. 0.089 IN.DIA,14.870 IN.LG		EA			*	*	*		*		
			5340-619-7031	MS21256-1 <96906>	CLIP,RETAINING-CRES,..... 1.115 IN.LG		EA			*	*	*		*		
			5340-619-7229	MS16633-1006 <96906>	RING,RETAINING-STEEL,..... EXTERNAL,0.057 IN.ID,0.010 IN.THK		EA			*	*	*		*		
			5340-620-8255	NAS43HT3-14 <80205>	SPACER,SLEEVE-STEEL,CADMIUM.. PLATED,0.194 IN.ID,0.322 IN.OD,7/32 IN.LG		EA			*	*	*		*		
			5340-631-3902	NAS42-4-128 <80205>	SPACER,SLEEVE-STEEL,0.127.... IN. ID, 0.260 IN. OD, 2.00 IN. LG		EA			*	*	*		*		
			5340-631-3903	NAS42-5-128 <80205>	SPACER,SLEEVE-STEEL,0.160.... IN. ID, 0.322 IN. OD, 2.00 IN. LG		EA			*	*	*		*		
			5340-632-1249	NAS42DD5-128 <80205>	SPACER,SLEEVE-ALUMINUM..... ALLOY,0.160 IN. ID,0.302 IN. OD,2.000 IN. LG		EA			*	*	*		*		
			5340-632-1254	NAS43DD4-192 <80205>	SPACER,SLEEVE-ALUMINUM..... ALLOY,0.256 IN.ID,0.385 IN. OD,2.437 IN.LG		EA			*	*	*		*		
			5340-633-5974	EAB210 <81996>	CHAIN HOOKS-CONSISTING OF.... 50 FT NO.00 BRONZE CHAIN & 100 NO.95 HOOKS		EA			*	*	*		*		
			5340-634-7884	MS20001P9-7200 <96906>	HINGE,BUTT-ALUMINUM ALLOY.... SINGLE ACTION,REMOVABLE PIN,1-1/4 IN.TRANSVERSELY TO HINGE PIN,72 IN. PARALLEL TO HINGE PIN		EA			*	*	*		*		
			5340-664-8121	MS20001P2-7200 <96906>	HINGE,BUTT-SINGLE ACTION,.... ALUMINUM ALLOY LEAVES, REMOVABLE STEEL PIN,17/32 IN.TRANSVERSELY TO HINGE PIN,72.00 IN.LG 0.44 IN.THK		EA			*	*	*		*		
			5340-664-8140	MS20001P3-7200 <96906>	HINGE,BUTT-ALUMINUM ALLOY,...		EA			*	*	*		*		

(1) SOURCE, MAINT AND REC CODE (a) SOURCE CODE	(b) MAINT LEVEL	(c) REC CODE	(2) FEDERAL STOCK NUMBER	REFERENCE NUMBER	(3) DESCRIPTION	MODELS USABLE ON CH-34C	(4) UNIT OF ISSUE	(5) QTY INC IN UNIT PACK	(6) QTY INC IN UNIT	(7) 30-DAY DS/GS MAINT ALW (a) 1-20	(b) 21-50	(c) 51-100	(8) 1-YR ALW PER 100 EQUIP CNTGCY	(9) DEPOT MAINT ALW PER 100 EQUIP	(10) ILLUSTRATION (a) FIG NO	(b) ITEM NO
					CONTINUED										BULK	
					1-1/4 IN.W,72 IN.LG											
			5340-664-8141	MS20001P4-7200 <96906>	HINGE,BUTT-SINGLE ACTION,.... ALUMINUM ALLOY LEAVES, REMOVABLE STEEL PIN,3/4 IN. TRANSVERSELY TO HINGE PIN, 72.00 IN.LG,0.044 IN.THK		EA			*	*	*		*		
			5340-726-3009	NAS815-10A <80205>	PLUG,PROTECTIVE,DUST AND..... MOISTURE SEAL-VIRGIN POLYETHYLENE,7/16 IN.-20 NF,FOR 1/4 IN.TUBE		EA			*	*	*		*		
			5340-727-1891	NAS43DD3-128 <80205>	SPACER,SLEEVE-ALUMINUM ALLOY. 0.194 IN.ID,0.322 IN. OD,1-7/16 IN.LG		EA			*	*	*		*		
			5340-781-8061	NAS815-5A <80205>	PLUG,PROTECTIVE DUST AND..... MOISTURE SEAL-PLASTIC,1/2 IN.-20 NF,0.680 IN.DIA		EA			*	*	*		*		
			5340-803-7312	MS16624-1035 <96906>	RING,RETAINING-STEEL,..... EXTERNAL,0.320 IN.ID, 0.025 IN.THK		EA			*	*	*		*		
			5340-803-7313	MS16624-1031 <96906>	RING,RETAINING-STEEL,..... EXTERNAL,0.281 IN.ID,0.357 OD,0.025 IN.THK		EA			*	*	*		*		
			5340-803-7320	MS16624-1106 <96906>	RING,RETAINING-STEEL,..... EXTERNAL,0.015 IN.ID, 0.050 IN.THK		EA							*		
			5340-804-6855	MS16625-4037 <96906>	RING,RETAINING-CRES,..... INTERNAL,0.415 IN.OD, 0.025 IN.THK		EA			*	*	*		*		
			5340-805-5118	RR314L <80756>	RING,RETAINING-STEEL..... INTERNAL APPLICATION, 2.920 IN.ID,3.276 IN.OD, 0.065 IN.THK		EA			*	*	*		*		
			5340-833-7039	NAS815-12A <80205>	PLUG,PROTECTIVE,DUST AND..... MOISTURE SEAL-VIRGIN POLYETHYLENE,1-1/16 IN.-12N,FOR 3/4 IN.TUBE		EA			*	*	*		*		
			5340-834-8329	NAS815-16A <80205>	PLUG,PROTECTIVE,DUST AND..... MOISTURE SEAL-VIRGIN POLYETHYLENE,1-5/16 IN.-12N,FOR 1 IN.TUBE		EA			*	*	*		*		
			5340-834-8330	NAS815-4A <80205>	PLUG,PROTECTIVE,DUST AND..... MOISTURE SEAL-VIRGIN POLYETHYLENE,7/16 FOR 1/4 IN.TUBE		EA			*	*	*		*		
			5340-871-8782	9526147 <73842>	RING,RETAINING.....		EA			*	*	*		*		
			5340-881-2676	NAS815-3A <80205>	PLUG,PROTECTIVE,DUST AND..... MOISTURE SEAL-VIRGIN POLYETHYLENE,3/8 IN.-24NF. FOR 3/16 IN.TUBE		EA			*	*	*		*		
			5340-936-9633	NAS1669-3-3 <80205>	FASTENER,GENERAL PURPOSE..... STEEL ALLOY NUT& SCRES,		EA			*	*	*		*		

(1) SOURCE, MAINT AND REC CODE (a) SOURCE CODE	(b) MAINT LEVEL	(c) REC CODE	(2) FEDERAL STOCK NUMBER	REFERENCE NUMBER	(3) DESCRIPTION	MODELS USABLE ON CH-34C	(4) UNIT OF ISSUE	(5) QTY INC IN UNIT PACK	(6) QTY INC IN UNIT	(7) 30-DAY DS/GS MAINT ALW (a) 1-20	(b) 21-50	(c) 51-100	(8) 1-YR ALW PER 100 EQUIP CNTGCY	(9) DEPOT MAINT ALW PER 100 EQUIP	(10) ILLUSTRATION (a) FIG NO	(b) ITEM NO
					CONTINUED EXTERNAL CRES SLEEVE, CADMIUM PLATED,PROTRUDING HEX HEAD,0.200 IN.DIA,0.157 IN.TO 0.219 IN.GRIP LG										BULK	
			5340-954-6826	EAB700D8 <81996>	CLAMP,LOOP-ALUMINUM ALLOY,... 1/2 IN.W,1/2 IN.LOOP ID, CONDITION T3 W/TETRAFLUORETHYLENE CUSHION		EA			*	*	*		*		
			5340-958-8197	NAS1354DS7S09D <80205>	PIN,QUICK RELEASE-DOUBLE..... ACTION,STEEL BODY,W/PUSH BUTTON RELEASE,3/4 IN.HEAD DIA,1/4 IN.BODY DIA,57/64 IN.LG,FURNISHED W/ATTACHING HOOK		EA			*	*	*		*		
			5340-984-8395	NAS1356DS7S09D <80205>	PIN,QUICK RELEASE-DOUBLE..... ACTION,BODY STEEL, MIL-S-6758		EA			*	*	*		*		
			5340-988-6032	NAS815-6A <80205>	PLUG,PROTECTIVE,DUST AND..... MOISTURE SEAL-VIRGIN, POLYETHYLENE,9/16 IN.-18 NF,3/8 IN.TUBE		EA			*	*	*		*		
			5340-989-4569	EAB700D9 <81996>	CLAMP,LOOP-ALUMINUM ALLOY,... W/CUSHION TETRAFLUOROETHYLENE,0.563 IN.ID,0.204 IN. HOLE DIA, 0.050 IN. THK		EA			*	*	*		*		
			5340-989-4570	EAB700D13 <81996>	CLAMP,LOOP-ALUMINUM ALLOY,... 1/2 IN.W,13/16 IN.LOOP ID, CONDITION T3, W/TETRAFLUOROETHYLENE CUSHION		EA			*	*	*		*		
			5340-989-4572	EAB700D15 <81996>	CLAMP,LOOP-ALUMINUM ALLOY,... W/TEFLON CUSHION,0.938 IN. ID,0.050 IN.THK,MATERIAL		EA			*	*	*		*		
			5340-989-4573	EAB700D16 <81996>	CLAMP,LOOP-ALUMINUM ALLOY,... 1/2 IN.W,0.015 IN.LOOP ID, CONDITION T3, W/TETRAFLUOROETHYLENE CUSHION		EA			*	*	*		*		
			5340-989-4576	EAB700D24 <81996>	CLAMP,LOOP-ALUMINUM ALLOY,... 1/2 IN.W,1-1/2 IN.LOOP ID, CONDITION T3, W/TETRAFLUOETHYLENE CUSHION		EA			*	*	*		*		
			5340-989-4577	EAB700D25 <81996>	CLAMP,LOOP-ALUMINUM ALLOY,... W/TETRAFLUOROETHYLENE CUSHION,1.563 IN.ID,0.204 IN.HOLE DIA,0.063 IN.THK		EA			*	*	*		*		
			5340-990-7157	MS21208C6-20 <96906>	INSERT,SCREW THREAD-CRES,3/8. IN.-16 NC,0.750 IN.LG		EA			*	*	*		*		

(1) SOURCE, MAINT AND REC CODE (a) SOURCE CODE	(b) MAINT LEVEL	(c) REC CODE	(2) FEDERAL STOCK NUMBER	REFERENCE NUMBER		(3) DESCRIPTION	MODELS USABLE ON CH-34C	(4) UNIT OF ISSUE	(5) QTY INC IN UNIT PACK	(6) QTY INC IN UNIT	(7) 30-DAY DS/GS MAINT ALW (a) 1-20	(b) 21-50	(c) 51-100	(8) 1-YR ALW PER 100 EQUIP CNTGCY	(9) DEPOT MAINT ALW PER 100 EQUIP	(10) ILLUSTRATION (a) FIG NO	(b) ITEM NO
			5340-990-9297	EAB700D2	<81996>	CLAMP,SUPPORT-ALUMINUM..... ALLOY,0.125 IN.ID		EA			*	*	*		*	BULK	
			5340-990-9298	EAB700D3	<81996>	CLAMP,LOOP-ALUMINUM ALLOY,... 1/2 IN.W,0.188 IN.LOOP ID, CONDITION T3, W/TETRAFLUOROETHYLENE CUSHION		EA			*	*	*		*		
			5340-990-9299	EAB700D4	<81996>	CLAMP,LOOP-ALUMINUM ALLOY,... 1/2 IN.W,0.015 IN.LOOP ID, CONDITION T3, W/TETRAFLUOROETHYLENE		EA			*	*	*		*		
			5340-990-9300	EAB700D6	<81996>	CLAMP,LOOP-ALUMINUM ALLOY,... 1/2 IN.W,0.015 IN.LOOP ID, CONDITION T3, W/TETRAFLUOROETHYLENE		EA			*	*	*		*		
			5340-993-1470	EAB700D18	<81996>	CLAMP,LOOP-ALUMINUM ALLOY,... 1.125 IN.ID		EA			*	*	*		*		
			5340-993-1474	EAB700D30	<81996>	CLAMP,LOOP-ALUMINUM ALLOY,... 1/2 IN.W,1-7/8 IN.LOOP ID, CONDITION T3, W/TETRAFLUOROETHYLENE		EA			*	*	*		*		
			5340-993-5478	EAB700D12	<81996>	CLAMP,LOOP-ALUMINUM ALLOY,... 1/2 IN.W,0.015 IN.LOOP ID, CONDITION T3, W/TETRAFLUOROETHYLENE		EA			*	*	*		*		
			5340-993-6244	EAB700D10	<81996>	CLAMP,LOOP-ALUMINUM ALLOY,... 1/2 IN.W,5/8 IN.LOOP ID, CONDITION T3, W/TETRAFLUOROETHYLENE		EA			*	*	*		*		
			5340-993-6247	EAB700D11	<96906>	CLAMP,LOOP-ALUMINUM ALLOY,... 1/2 IN.W,0.015 IN.LOOP ID, TEMPER T3, W/TETRAFLUOROETHYLENE		EA			*	*	*		*		
			5340-993-6248	EAB700D27	<81996>	CLAMP,LOOP-ALUMINUM ALLOY,... 1/2 IN.W,0.015 IN.LOOP ID, TEMPER T3, W/TETRAFLUOROETHYLENE		EA			*	*	*		*		
			5340-993-6249	EAB700D20	<81996>	CLAMP,LOOP-ALUMINUM ALLOY.... W/TETRAFLUOROETHYLENE CUSHION,1.250 IN.ID,0.204 IN.HOLE DIA,0.063 IN.THK		EA			*	*	*		*		
			5355-443-3163	149-120	<33918>	WINDOW,DIAL-GLASS,..... COLORLESS,1.867 IN.OD,1/8 IN.THK,W/O FRAME,METALLIZED PORTION ON EDGE		EA			*	*	*		*		
			5355-538-6382	MS28105-16	<96906>	WINDOW,DIAL-GLASS,..... COLORLESS,2.995 IN.OD,0.125 IN.THK,W/O FRAME		VX			*	*	*		*		
			5920-284-6787		<81349>	FUSE,CARTRIDGE-GLASS BODY.... NORMAL INSTANTANEOUS,ONE TIME OPERATION, NONINDICATING,FERRULE TYPE		EA			*	*	*		*		

(1) SOURCE, MAINT AND REC CODE (a) SOURCE CODE	(b) MAINT LEVEL	(c) REC CODE	(2) FEDERAL STOCK NUMBER	REFERENCE NUMBER	(3) DESCRIPTION	MODELS USABLE ON CH-34C	(4) UNIT OF ISSUE	(5) QTY INC IN UNIT PACK	(6) QTY INC IN UNIT	(7) 30-DAY DS/GS MAINT ALW (a) 1-20	(b) 21-50	(c) 51-100	(8) 1-YR ALW PER 100 EQUIP CNTGCY	(9) DEPOT MAINT ALW PER 100 EQUIP	(10) ILLUSTRATION (a) FIG NO	(b) ITEM NO
					CONTINUED										BULK	
					TERMINAL,5 AMP,250 V,0.250 IN.W,1.250 IN.LG, MIL-F-15160/02,TYPE											
			5925-810-8601	MS24506-5	<96906> CIRCUIT BREAKER-SPST,AIR ARE. QUENCHING,CONTINUOUS LOAD RATING,30 V DC,5 AMP, OVERLOAD PROTECTION,THERMAL TRIP RELEASE,PUSH BUTTON TYPE,DUSTPROOF,3/4 IN.W, 2-3/16 IN.LG,2-5/8 IN.H, FLUSH MOUNTED BY 2 NO.6-32 NC,SELF-LOCKING NUTS, 2 SCREW TYPE TERMINALS		EA			*	*	*		*		
			5930-063-6813	MS25452-1	<96906> GUARD,SWITCH-STEEL,2..... POSITIONS,0.750 IN.W,2.125 IN.LG,1.250 IN.H,2 MTG HOLES,0.156 IN.DIA		EA			*	*	*		*		
			5930-617-9718	MS25224-3	<96906> GUARD SWITCH-STEEL,RED..... MOLDED PLASTIC,2 POSITIONS, 0.750 IN.W,1.812 IN.LG, 1.125 IN.H		EA			*	*	*		*		
			5930-636-2682	446101	<76220> SWITCH,TOGGLE-PHENOLIC..... BASE,METAL CASE,1-5/32 IN. DIA,1-13/32 IN.LG,LEVER TYPE ACTUATOR,BASE MOUNTED		EA			*	*	*		*		
			5930-655-1513	MS35058-21	<96906> SWITCH,TOGGLE-PLASTIC BODY,.. 15/32 IN.DIA,21/32 IN.H, 5/8 IN.W,1-1/8 IN.LG		EA			*	*	*		*		
			5930-655-1515	MS35058-23	<96906> SWITCH,TOGGLE-SPDT,5/8 IN.... W,1-3/64 IN.LG,1-1/8 IN.H, LEVER TYPE,3 SCREW TYPE TERMINALS,GENERAL PURPOSE USE		EA			*	*	*		*		
			5930-655-1575	MS35059-22	<96906> SWITCH,TOGGLE-6 TERMINALS,6.. SCREWS,6 WASHERS,TWO POLES, 1.025 IN.W,1.346 IN.LG,1 MTG HOLE,CIRCUIT WITH TOGGLE LEVER IN UP POSITION ON,CENTER POSITION NONE, DOWN POSITION OFF		EA			*	*	*		*		
			5930-655-1579	MS25103-24	<96906> SWITCH,TOGGLE-DPST,1 33/64... IN.W,2 1/8 IN.LG,1 11/32 IN.H,4 SCREW TYPE TERMINALS,FLUSH MOUNTED		EA			2	6	11		*		
			5935-257-8321	11751-1	<71468> CONNECTOR,PLUG,ELECTRICAL.... 90 DEG,3-1/16 IN.W,2-15/16 IN.H,7/16 IN.DIA		EA			*	*	*		*		
			5935-504-4028	AN3117-1	<88044> JACK,TELEPHONE-5/8 IN.W,..... 1-1/8 IN.LG,1-1/4 IN.H,FOR 1/4 IN.SHANK DIA		EA			*	*	*		*		
			5935-660-4296	UG563BU	<80056> CONNECTOR,PLUG,ELECTRICAL....		EA			*	*	*		*		

(1) SOURCE, MAINT AND REC CODE (a) SOURCE CODE	(b) MAINT LEVEL	(c) REC CODE	(2) FEDERAL STOCK NUMBER	(3) DESCRIPTION REFERENCE NUMBER			MODELS USABLE ON CH-34C	(4) UNIT OF ISSUE	(5) QTY INC IN UNIT PACK	(6) QTY INC IN UNIT	(7) 30-DAY DS/GS MAINT ALW (a) 1-20	(b) 21-50	(c) 51-100	(8) 1-YR ALW PER 100 EQUIP CNTGCY	(9) DEPOT MAINT ALW PER 100 EQUIP	(10) ILLUSTRATION (a) FIG NO	(b) ITEM NO
			5935-725-4583	MS3108R20-27P	<96906>	CONNECTOR,PLUG,ELECTRICAL,... ENVIRONMENT RESISTANT,1-1/4 IN.-18 NEF,INSERT ARRANGEMENT -27,PIN INSERT		EA			*	*	*		*	BULK	
			5935-725-6618	MS3100R16S1S	<96906>	CONNECTOR,RECEPTACLE,..... ELECTRICAL-ENVIRONMENT RESISTANT, 1 IN.-20 NEF, INSERT ARRANGEMENT -1, SOCKET INSERT		EA			*	*	*		*		
			5935-725-6633	MS3106R14S5P	<96906>	CONNECTOR,PLUG,ELECTRICAL,... ENVIRONMENT RESISTANT,7/8 IN.-20 NEF,INSERT		EA			*	*	*		*		
			5935-725-8233	MS3106R20-29S	<96906>	CONNECTOR,PLUG,ELECTRICAL.... ENVIRONMENT RESISTANT,1-1/4 IN.-18 NEF,INSERT ARRANGEMENT-29,SOCKET INSERT		EA			*	*	*		*		
			5935-726-0686	MS3106R16S4S	<96906>	CONNECTOR,PLUG,ELECTRICAL.... ENVIRONMENT RESISTANT,1 IN.-20 NEF,INSERT ARRANGEMENT-4,SOCKET INSERT		EA			*	*	*		*		
			5935-755-3624	MS3106R14S7P	<96906>	CONNECTOR,PLUG,ELECTRICAL.... ENVIRONMENT RESISTANT,7/8 IN.-20 NEF,INSERT ARRANGEMENT-7,PIN INSERT		EA			*	*	*		*		
			5935-805-3286	MS3108R14S5S	<96906>	CONNECTOR,PLUG,ELECTRICAL.... ENVIRONMENT RESISTANT,7/8 IN.-20 NEF,INSERT ARRANGEMENT-5,SOCKET INSERT		EA			*	*	*		*		
			5935-805-4991	MS3106R14S7S	<96906>	CONNECTOR,PLUG,ELECTRICAL.... ENVIRONMENT RESISTANT,7/8 IN.-20 NEF,INSERT ARRANGEMENT-7,SOCKET INSERT		EA			*	*	*		*		
			5935-807-8001	MS3106R16-9S	<96906>	CONNECTOR,PLUG,ELECTRICAL.... ENVIRONMENT RESISTANT,1 IN.-20 NEF,INSERT ARRANGEMENT-9,SOCKET INSERT		EA			*	*	*		*		
			5935-818-3091	MS3108R18-4S	<96906>	CONNECTOR,PLUG,ELECTRICAL.... ENVIRONMENT RESISTANT,1-1/8 IN.-18 NEF,INSERT ARRANGEMENT-4,SOCKET INSERT		EA			*	*	*		*		
			5935-819-6056	MS3106R16S8S	<96906>	CONNECTOR,PLUG,ELECTRICAL.... ENVIRONMENT RESISTANT, INSERT ARRANGEMENT-8, SOCKET INSERT		EA			*	*	*		*		
			5935-823-0487	MS35168-88E	<96906>	CONNECTOR,PLUG,ELECTRICAL.... WEATHERPROOF,1 CONTACT,1 CONNECTOR MATING END, W/CORROSION RESISTANT COPPER BASE ALLOY INCLOSING SHELL,7/16 IN.-28 NEF, 0.562 IN.DIA,1.125 IN.LG		EA			*	*	*		*		

(1) SOURCE, MAINT AND REC CODE (a) SOURCE CODE	(b) MAINT LEVEL	(c) REC CODE	(2) FEDERAL STOCK NUMBER	REFERENCE NUMBER	(3) DESCRIPTION	MODELS USABLE ON CH-34C	(4) UNIT OF ISSUE	(5) QTY INC IN UNIT PACK	(6) QTY INC IN UNIT	(7) 30-DAY DS/GS MAINT ALW (a) 1-20	(b) 21-50	(c) 51-100	(8) 1-YR ALW PER 100 EQUIP CNTGCY	(9) DEPOT MAINT ALW PER 100 EQUIP	(10) ILLUSTRATION (a) FIG NO	(b) ITEM NO
			5935-846-2329	MS3106R20-27S <96906>	CONNECTOR,PLUG,ELECTRICAL.... ENVIRONMENT RESISTANT,1-1/4 IN.-18 NEF,INSERT ARRANGEMENT-27,SOCKET INSERT		EA			*	*	*		*	BULK	
			5935-855-0020	MS3108R32-3P <96906>	CONNECTOR,PLUG,ELECTRICAL.... ENVIRONMENT RESISTANT,2 IN.-18 NEF,INSERT ARRANGEMENT-3,PIN INSERT		EA			*	*	*		*		
			5935-888-7405	CA011749-0001 <71468>	CONNECTOR,RECEPTACLE,..... ELECTRICAL		EA			*	*	*		*		
			5940-081-6055	MS25036-5 <96906>	TERMINAL,LUG-COPPER,..... INSULATED,CRIMP TYPE,1.375 IN.LG,NO.22-18 AWG,FOR 3/8 IN.STUD		AV			*	*	*		*		
			5940-082-4642	MS18029-11S20 <96906>	COVER,TERMINAL BOARD..... PLASTIC,0.813 IN.W,12.334 IN.LG,0.234 IN.H,2 MTG HOLES,0.479 IN.DIA		EA			*	*	*		*		
			5940-204-8961	MS25036-10 <96906>	TERMINAL,LUG-COPPER,1.250.... IN.LG,NO.16-14 AWG		AV			*	*	*		*		
			5940-204-8990	MS25036-11 <96906>	TERMINAL,LUG-COPPER,..... INSULATED,0.142 IN.DIA HOLE,0.172 IN.LG,NO.12-10 AWG		XX			*	*	*		*		
			5940-204-9141	MS25036-14 <96906>	TERMINAL,LUG-COPPER,..... INSULATED,0.385 IN. DIA HOLE,1.516 IN. LG,NO. 12-10 AWG		PG			*	*	*		*		
			5940-230-0515	MS25036-54 <96906>	TERMINAL,LUG-COPPER,..... INSULATED,0.285 IN.DIA HOLE,1.085 IN.LG,NO.16-14 AWG		EA			*	*	*		*		
			5940-283-5280	MS25036-6 <96906>	TERMINAL,LUG-COPPER,..... INSULATED,CRIMP TYPE,0.875 IN.LG,NO.16-14 AWG,FOR NO.6 STUD		HD			*	*	*		*		
			5940-345-1276	AN753-1 <88044>	SPLICE SET,QUICK DISCONNECT.. 0.205 IN.ID,0.812 IN.LG		PG			*	*	*		*		
			5940-502-7570	AN55381 <88044>	TERMINAL,LUG-BRASS,SOLDER.... LEAD,11/64 IN.HOLE DIA, 11/64 IN.GROOVE W,NO.8-32 NC,SCREW SIZE		EA			*	*	2		*		
			5940-504-3543	MS25022-22 <96906>	TERMINAL,LUG-1.875 IN.LG,NO.. 0 AWG,90 DEG ANGLE TYPE, MIL-T-70998		EA			*	*	*		*		
			5940-534-0973	MS25036-13 <96906>	TERMINAL,LUG-COPPER,..... INSULATED,5/16 IN.HOLE DIA, 1.390 IN.LG,NO.10-12 AWG		EA			9	21	43		*		
			5940-557-4340	MS25036-27 <96906>	TERMINAL,LUG-COPPER,..... INSULATED,0.385 IN.DIA HOLE,2.263 IN. LG,NO. 2 AWG		VX			*	*	*		*		

(1) SOURCE, MAINT AND REC CODE (a) SOURCE CODE	(b) MAINT LEVEL	(c) REC CODE	(2) FEDERAL STOCK NUMBER	(3) DESCRIPTION REFERENCE NUMBER			MODELS USABLE ON CH-34C	(4) UNIT OF ISSUE	(5) QTY INC IN UNIT PACK	(6) QTY INC IN UNIT	(7) 30-DAY DS/GS MAINT ALW (a) 1-20	(b) 21-50	(c) 51-100	(8) 1-YR ALW PER 100 EQUIP CNTGCY	(9) DEPOT MAINT ALW PER 100 EQUIP	(10) ILLUSTRATION (a) FIG NO	(b) ITEM NO
			5940-577-3711	MS25036-3	<96906>	TERMINAL,LUG-COPPER..... INSULATED,0.203 IN.HOLE DIA,1.050 IN.LG,NO.22-18 AWG		PG			*	*	*		*	BULK	
			5940-642-1377	397-1	<94640>	COVER,TERMINAL BOARD..... SYNTHETIC,27/32 IN.H,3/4 IN.W,0.844 IN.LG		EA			*	*	*		*		
			5940-644-8713	MS25036-8	<96906>	TERMINAL,LUG-COPPER,..... INSULATED,CRIMP TYPE,1.050 IN.LG,NO.16-14 AWG,FOR NO. 10 STUD		AV			*	*	*		*		
			5940-660-3634	MS25036-57	<96906>	TERMINAL,LUG-COPPER,..... INSULATED,CRIMP TYPE,1.375 IN.LG,NO.12-10 AWG,FOR 1/4 IN.STUD		EA			*	*	*		*		
			5940-686-7616	MS25036-30	<96906>	TERMINAL,LUG-COPPER,..... INSULATED,0.385 IN.DIA, 2.277 IN.LG,NO.1 AWG		PG			*	*	*		*		
			5940-877-9111	AN753-3	<88044>	SPLICE SET-QUICK DISCONNECT,. 0.125 IN.ID,1.500 IN.LG		PG			*	*	*		*		
			5940-892-3111	MS25435-15	<96906>	TERMINAL,LUG-WROUGHT..... ALUMINUM,0.385 IN.HOLE DIA,NO.2 AWG		EA			*	*	*		*		
			5940-907-5939	MS18029-21	<96906>	NUT ASSEMBLY,TERMINAL BOARD.. PLASTIC,W/CRES INSERT,NO. 6-32 NC,W/MS16624-40 RETAINING RING		EA			*	*	*		*		
			5940-950-1610	MS27212-1-20	<96906>	TERMINAL BOARD-PLASTIC,..... 0.115 IN.DIA,11/16 IN.W, 12.318 IN.LG,9/16 IN.H,20 STUDS		EA			*	*	*		*		
			5940-950-7783	MS27212-4-8	<96906>	TERMINAL BOARD-PLASTIC,1.250. IN.W,12.641 IN.LG,1.297 IN. H,W/8 CRES STUDS,5/16 IN.-24 NF,9 MTG HOLES,0.141 IN.DIA		EA			*	*	*		*		
			5945-225-8692	MS24149D1	<96906>	RELAY,SOLENOID-CONTINUOUS.... DUTY,HERMETICALLY SEALED,2 PDT,110 V AC MAX,10 AMP RESISTIVE CURRENT,28 V DC MAC,10 AMP RESISTIVE CURRENT,1 DC INDUCTIVE WINDING COIL,28 V OPERATING VOLTAGE,POLARIZED,2.600 IN. W,2.500 IN.LG,1.625 IN.H 12 HOLES,0.173 IN.DIA,6 ON BOTTOM & 6 ON SIDE,6 TERMINALS FOR CONTACTS & 2 FOR COIL		EA			*	*	*		*		
			5970-235-2719		<81349>	INSULATION SLEEVING..... ELECTRICAL-PLASTIC,VINYL, FLEXIBLE,0.166 IN.ID,0.020		FT			*	*	*		*		

(1) SOURCE, MAINT AND REC CODE (a) SOURCE CODE	(b) MAINT LEVEL	(c) REC CODE	(2) FEDERAL STOCK NUMBER	REFERENCE NUMBER	(3) DESCRIPTION	MODELS USABLE ON CH-34C	(4) UNIT OF ISSUE	(5) QTY INC IN UNIT PACK	(6) QTY INC IN UNIT	(7) 30-DAY DS/GS MAINT ALW (a) 1-20	(b) 21-50	(c) 51-100	(8) 1-YR ALW PER 100 EQUIP CNTGCY	(9) DEPOT MAINT ALW PER 100 EQUIP	(10) ILLUSTRATION (a) FIG NO	(b) ITEM NO
					CONTINUED										BULK	
					IN.THK,MIL-I-7444B											
			5970-235-2721	<81349>	INSULATION SLEEVING,..... ELECTRICAL-PLASTIC,0.066 IN.ID,0.016 IN.WALL THK,200 V,SIZE 14,MIL-I-7444A		FT			*	*	*		*		
			5970-284-8070	102976 <06840>	INSULATOR,BUSHING-CERAMIC,... UNGLAZED,0.432 IN.ID,0.625 IN.W,2.250 IN.LG		EA							*		
			5970-284-8468	<81349>	INSULATION SLEEVING..... ELECTRICAL-PLASTIC FLEXIBLE,0.0500 IN.ID, 0.025 IN.THK,MIL-I-7444		FT			*	*	*		*		
			5970-284-9698	B034658-17 <18876>	INSULATION SLEEVING,..... ELECTRICAL-PLASTIC, FLEXIBLE,0.208 IN.ID,0.020 IN.THK,MIL-I-7444		FT			*	*	*		*		
			5970-556-2717	MILI631TYFCLIFORMUSIZE7AWG <81349>	INSULATION SLEEVING.....		FT			*	*	*		*		
			5970-557-6254	B034658-25 <18876>	INSULATION SLEEVING..... ELECTRICAL VINYL PLASTIC, FLEXIBLE,200 V,CLEAN, TRANSPARENT,0.500 IN.ID, 0.022 IN.WALL THK, MIL-L-7444,SIZE 1/2 IN.		FT			*	*	*		*		
			6110-305-1202	836948 <19315>	PILE,CARBON REGULATOR.....		EA			*	*	*		*		
			6145-191-1529	ALO <81349>	WIRE,ELECTRICAL-INSULATED,... STRANDED,NO. 0 AWG,NO. 24 AWG,ALUMINUM CONDUCTOR, 0.510 IN. DIA,600V, MIL-W-5086		FT			*	*	*		*		
			6145-236-9503	<81348>	WIRE,ELECTRICAL-COPPER,BARE,. SOLID CONDUCTOR,24 AWG,FED QQ-W-343,TYPE S		LB			*	*	*		*		
			6145-284-0657	MS25190B8 <96906>	WIRE,ELECTRICAL-COPPER,..... INSULATED,STRANDED,600 V, NO.8 AWG,MIL-W-5086		FT			*	*	*		*		
			6145-542-6092	RG58CU <81349>	CABLE,RADIO FREQUENCY..... COPPER,SINGLE BRAID,50 OHMS,NO.34 AWG,0.195 IN. DIA,W/SYNTHETIC RESIN JACKET		EA			*	*	*		*		
			6145-578-6595	MS25190B4 <96906>	WIRE,ELECTRICAL-COPPER,..... INSULATED,STRANDED,600 V, 0.355 IN.DIA,TYPE 2,AN-4		FT			*	*	*		*		
			6145-578-6596	MS25190B2 <96906>	WIRE,ELECTRICAL-COPPER,..... INSULATED,STRANDED,0.435 IN.DIA,600 V,NO.2 AWG, MIL-W-5086A,TYPE 2,AN2		FT			*	*	*		*		
			6145-578-6597	MS25190B1 <96906>	WIRE,ELECTRICAL-COPPER..... INSULATED,STRANDED,0.495 IN.DIA,600 V,NO.30 AWG,		FT			*	*	*		*		

(1) SOURCE, MAINT AND REC CODE (a) SOURCE CODE	(b) MAINT LEVEL	(c) REC CODE	(2) FEDERAL STOCK NUMBER	REFERENCE NUMBER	(3) DESCRIPTION	MODELS USABLE ON CH-34C	(4) UNIT OF ISSUE	(5) QTY INC IN UNIT PACK	(6) QTY INC IN UNIT	(7) 30-DAY DS/GS MAINT ALW (a) 1-20	(b) 21-50	(c) 51-100	(8) 1-YR ALW PER 100 EQUIP CNTGCY	(9) DEPOT MAINT ALW PER 100 EQUIP	(10) ILLUSTRATION (a) FIG NO	(b) ITEM NO
					CONTINUED MIL-W-5086										BULK	
			6145-578-6602	MS25190B18 <96906>	WIRE,ELECTRICAL-COPPER,..... INSULATED,STRANDED,WHITE, 600 V,0.095 IN.DIA,NO.17 AWG,MIL-W-5086,TYPE 2		FT			*	*	*		*		
			6145-578-6604	MS25190B14 <96906>	WIRE,ELECTRICAL-COPPER,..... INSULATED,STRANDED,0.125 IN.DIA,600 V,TYPE 2,AN-14		FT			*	2	2		*		
			6145-578-6605	MS25190B16 <96906>	WIRE,ELECTRICAL-INSULATED,... STRANDED,COPPER,TINNED FINISH,NO.16 AWG,0.105 IN. DIA,600 V,COLOR CODE WHITE, MIL-W-5086A,TYPE 2		FT			*	2	2		*		
			6145-578-6606	MS25190B22 <96906>	WIRE,ELECTRICAL-COPPER,..... INSULATED,STRANDED,600 V, 0.075 IN.DIA,TYPE 2,AN-22		FT			*	*	*		*		
			6145-578-7513	MS25190B10 <96906>	WIRE,ELECTRICAL-COPPER,..... INSULATED,STRANDED,0.128 IN.ID,0.189 IN.OD,AN10 WIRE SIZE,600 V		FT			*	*	*		*		
			6145-578-7514	AN12 <88044>	WIRE,ELECTRICAL-COPPER,..... INSULATED,STRANDED,600 V, WHITE,MIL-W-5086A		FT			*	*	*		*		
			6145-851-8505	MS25190B20 <96906>	WIRE,ELECTRICAL-COPPER,..... INSULATED,STRANDED,0.085 IN.DIA,600 V,500 FT REEL		FT			*	*	*		*		
			6145-904-2463	<81349>	WIRE,ELECTRICAL-COPPER..... INSULATED,STRANDED,RED, FLAME RESISTANT,600 V,0.067 IN.DIA,NO.22 AWG, MIL-W-12349		FT			*	*	*		*		
			6145-993-5490	MS17411-18 <96906>	WIRE,ELECTRICAL-COPPER,..... INSULATED,STRANDED,0.110 IN.DIA,AN-18		FT			*	*	*		*		
			6210-519-2653	MS25010B11A <96906>	LIGHT,PANEL-RED LENS,MIDGET.. OF 7 BY 37/.005 IN.TINNED BRASS SHELL,MOUNTED THRU 3/4 IN.TO 1/8 IN.PITCH, 1-10 FT LG OF 7 BY 75/.005 0.625 IN.DIA,1.277 IN.LG, SCREW TYPE TERMINAL IN.PITCH,WIRE TO MEET FED SPEC QQ-W-343		EA			*	*	*		*		
			6220-226-9259	A6815-24 <72914>	LIGHT,PANEL-ALUMINUM FRAME... BLACK CRACKLE FINISH,1 LAMP ACCOMMODATION,MIDGET FLANGE BASE,T-1-1/4 MAX BULB SHAPE & SIZE,W/SHADE & RED LENS, 3/8 IN.W,1-3/8 IN.LG,1/2 IN.H,MTD THREE PANEL,1/4 IN.DIA MTG HOLE,1/8 IN.MAX		EA			*	*	*		*		

(1) SOURCE, MAINT AND REC CODE (a) SOURCE CODE	(b) MAINT LEVEL	(c) REC CODE	(2) FEDERAL STOCK NUMBER	REFERENCE NUMBER	(3) DESCRIPTION	MODELS USABLE ON CH-34C	(4) UNIT OF ISSUE	(5) QTY INC IN UNIT PACK	(6) QTY INC IN UNIT	(7) 30-DAY DS/GS MAINT ALW (a) 1-20	(b) 21-50	(c) 51-100	(8) 1-YR ALW PER 100 EQUIP CNTGCY	(9) DEPOT MAINT ALW PER 100 EQUIP	(10) ILLUSTRATION (a) FIG NO	(b) ITEM NO
					CONTINUED THK PANEL,1 WIRE LEAD TYPE TERMINAL										BULK	
			6220-299-4104	MS25331-6 <96906>	LIGHT,INDICATOR-W/LENS,RED... CLEAR,SMOOTH,BOTH SIDES, INCANDESCENT LAMP,MINIATURE BAYONET BASE,T-3-1/4 IN. BULB,SHELL TYPE,3/4 IN.DIA, 2-1/4 IN.LG,THD BUSHING MOUNTED,5/8 IN.-24 NEF,3 SOLDER LUG TYPE TERMINALS		EA			*	*	*		*		
			6220-484-0924	1104 <72914>	COVER,LENS,POSITION.....		EA			*	*	*		*		
			6240-155-8714	MS25231-313 <96906>	LAMP,INCANDESCENT-28 V,..... CLEAR FINISH,1.188 IN.LG		EA			*	*	*		*		
			6240-178-9935	MS15616-1 <96906>	LAMP,FLUORESCENT-4 W. RP-12.. BULB,ULTRA-VIOLET LIGHT, 2-9/16 IN. LG,LAMP NO. F5000		EA			*	*	*		*		
			6240-564-1084	MS25338-7079 <96906>	LAMP,INCANDESCENT-28 V,..... CLEAR FINISH,2-3/8 IN.LG		EA			*	*	*		*		
			6610-095-8779	728208-1 <19315>	CHAIN,INDICATOR.....		EA			*	*	*		*		
			6685-526-8415	AN4062-11 <88044>	INDICATOR,HUMIDITY,PLUG-HEX.. HEAD,18 MM THD,2.940 IN.LG, REFILLABLE		EA			*	*	*		*		
			7510-473-8157	EA879BO <81996>	TAPE,AIRCRAFT TUBING..... IDENTIFICATION MARKER PLASTIC,GREEN,INSCRIBED <BREATHING OXYGEN>,1 IN.W, 10 FT LG,MIL-T-9906		RL			*	*	*		*		
			7510-550-7127	<81348>	TAPE,PRESSURE SENSITIVE-LT90.		RL			*	*	*		*		
			7510-579-8724	MS16837-102 <96906>	TAPE,AIRCRAFT TUBING..... IDENTIFICATION MARKER-CELLULOSE ACETATE, INSCRIBED-FUEL DRAIN,1 IN. CORE ID,66 FT ROLL		RL			*	*	*		*		
			7510-579-8829	MS16837-382 <96906>	TAPE,AIRCRAFT TUBING..... IDENTIFICATION MARKER CELLULOSE ACETATE,INSCRIBED <INSTRUMENT AIR PITOT PRESS>,1 IN.CORE ID,66 FT ROLL		RL			*	*	*		*		
			7510-579-8831	MS16837-113 <96906>	TAPE,AIRCRAFT TUBING..... IDENTIFICATION MARKER CELLULOSE ACETATE,INSCRIBED <FUEL VENT>,1 IN.CORE ID,66 FT ROLL		RL			*	*	*		*		
			7510-579-8832	MS16837-110 <96906>	TAPE,AIRCRAFT TUBING..... IDENTIFICATION MARKER CELLULOSE ACETATE,INSCRIBED <FUEL PRESSURE>,1 IN.CORE ID,66 FT ROLL		RL			*	*	*		*		
			7510-579-8841	MS16837-381 <96906>	TAPE,AIRCRAFT TUBING.....		EA			*	*	*		*		

(1) SOURCE, MAINT AND REC CODE (a) SOURCE CODE	(b) MAINT LEVEL	(c) REC CODE	(2) FEDERAL STOCK NUMBER	REFERENCE NUMBER	(3) DESCRIPTION	MODELS USABLE ON CH-34C	(4) UNIT OF ISSUE	(5) QTY INC IN UNIT PACK	(6) QTY INC IN UNIT	(7) 30-DAY DS/GS MAINT ALW (a) 1-20	(b) 21-50	(c) 51-100	(8) 1-YR ALWPER 100 EQUIP CNTGCY	(9) DEPOT MAINT ALWPER 100 EQUIP	(10) ILLUSTRATION (a) FIG NO	(b) ITEM NO
					CONTINUED IDENTIFICATION MARKER CELLULOSE ACETATE,INSCRIBED <INSTRUMENT AIR MANIFOLD PRESS>,1 IN.CORE ID,66 FT ROLL										BULK	
			7510-579-8846	MS16837-383 <96906>	TAPE,AIRCRAFT TUBING..... IDENTIFICATION MARKER CELLULOSE ACETATE,INSCRIBED <INSTRUMENT AIR STATIC PRESS>,1 IN.CORE ID,66 FT ROLL		RL			*	*	*		*		
			7510-579-8938	MS16837-366 <96906>	TAPE,AIRCRAFT TUBING..... IDENTIFICATION MARKER CELLULOSE ACETATE,INSCRIBED HYDRAULIC WHEEL BRAKE LH,1 IN.CORE ID,66 FT ROLL		RL			*	*	*		*		
			7510-579-8939	MS16837-367 <96906>	TAPE,AIRCRAFT TUBING..... IDENTIFICATION MARKER CELLULOSE ACETATE,INSCRIBED HYDRAULIC WHEEL BRAKE RH,1 IN.CORE ID,66 FT ROLL		RL			*	*	*		*		
			7510-582-0635	MS16837-406 <96906>	TAPE,AIRCRAFT TUBING..... IDENTIFICATION MARKER CELLULOSE ACETATE,INSCRIBED <CABIN HEAT>,1 IN.CORE ID, 66 FT ROLL		RL			*	*	*		*		
			7510-582-0666	MS16837-261 <96906>	TAPE,AIRCRAFT TUBING..... IDENTIFICATION MARKER-CELLULOSE ACETATE, INSCRIBED-HYDRAULIC PRIMARY PUMP PRESS,1 IN.CORE ID,66 FT ROLL		RL			*	*	*		*		
			7510-582-7686	MS16837-379 <96906>	TAPE,AIRCRAFT TUBING..... IDENTIFICATION MARKER CELLULOSE ACETATE,INSCRIBED <INSTRUMENT AIR DRAIN>,1 IN.CORE ID,66 FT ROLL		RL			*	*	*		*		
			7510-582-7688	MS16837-100 <96906>	TAPE,AIRCRAFT TUBING..... IDENTIFICATION MARKER CELLULOSE ACETATE,INSCRIBED <FIRE PROTECTION FIRE EXTINGUSHER>,1 IN.CORE ID, 66 FT ROLL		RL			*	*	*		*		
			7510-584-0213	MS16837-112 <96906>	TAPE,AIRCRAFT TUBING..... IDENTIFICATION MARKER CELLULOSE ACETATE,INSCRIBED <FUEL TRANSFER>,1 IN.CORE ID,66 FT ROLL		RL			*	*	*		*		
			7510-753-4727	<81349>	TAPE,AIRCRAFT TUBING..... IDENTIFICATION MARKER PLASTIC,INSCRIBED		RL			*	*	*		*		

(1) SOURCE, MAINT AND REC CODE (a) SOURCE CODE	(b) MAINT LEVEL	(c) REC CODE	(2) FEDERAL STOCK NUMBER	REFERENCE NUMBER	(3) DESCRIPTION	MODELS USABLE ON CH-34C	(4) UNIT OF ISSUE	(5) QTY INC IN UNIT PACK	(6) QTY INC IN UNIT	(7) 30-DAY DS/GS MAINT ALW (a) 1-20	(b) 21-50	(c) 51-100	(8) 1-YR ALW PER 100 EQUIP CNTGCY	(9) DEPOT MAINT ALW PER 100 EQUIP	(10) ILLUSTRATION (a) FIG NO	(b) ITEM NO
					CONTINUED										BULK	
					<HYDRAULIC>,3 IN.CORE ID,50 YD ROLL,MIL-T-9906											
			7510-753-4728	<81349>	TAPE,AIRCRAFT TUBING..... IDENTIFICATION MARKER PLASTIC,INSCRIBED<FUEL>,3 IN.CORE ID,50 YD ROLL, MIL-T-9906		RL			*	*	*		*		
			7510-753-4730	<81349>	TAPE,AIRCRAFT TUBING..... IDENTIFICATION MARKER PLASTIC,INSCRIBED-BREATHING OXYGEN,3 IN.CORE ID,50 YD ROLL,MIL-T-9906		RL			*	*	*		*		
			7510-753-4733	<81349>	TAPE,AIRCRAFT TUBING..... IDENTIFICATION MARKER-PLASTIC,INSCRIBED-DE-ICING, 3 IN.CORE ID,50 YD ROLL, MIL-T-9906		RL			*	*	*		*		
			7510-753-4741	<81349>	TAPE,AIRCRAFT TUBING..... IDENTIFICATION MARKER PLASTIC,INSCRIBED LUBRICATION,3 IN.CORE ID,50 YD LG,MIL-T-9906		RL			*	*	*		*		
			7510-753-4742	<81349>	TAPE,AIRCRAFT TUBING..... IDENTIFICATION MARKER PLASTIC,INSCRIBED <INSTRUMENT AIR>,3 IN.CORE ID,50 YD ROLL,MIL-T-9906		RL			*	*	*		*		
			7510-889-3494	<81349>	BINDER,LOOSE-LEAF-3 RING..... TYPE FASTENERS,3-1/2 IN. CENTER SPACING,8 IN.W,10 IN.LG,VINYL PLASTIC COVER, GREEN,MIL-8-43064		EA			*	*	*		*		
			8105-290-0340	<81348>	SACK,SHIPPING-SPECTROMETRIC.. OIL ANALYSIS FOR ALL ARMY AIRCRAFT,FED PPP-S-30, TYPE 1-10LG6W		EA			*	*	*		*		
			8125-933-4414	PW4005 <73866>	BOTTLE,COLORED-GLASS,WHITE... CAP,5 DRAM,SPECTROMETRIC OIL ANALYSIS FOR ALL ARMY AIRCRAFT		GR			*	*	*		*		
			8135-906-1339	588002-6 <05259>	CUSHIONING MATERIAL,PACKAGING		EA							*		
			8135-906-1340	588002-5 <05259>	CUSHIONING MATERIAL,PACKAGING		EA							*		
			8135-906-1341	588002-1 <05259>	CUSHIONING MATERIAL,PACKAGING		EA							*		
			8135-906-1342	588015-1 <05259>	CUSHIONG MATERIAL,PACKAGING..		EA							*		
			8135-906-1343	588002-2 <05259>	CUSHIONING MATERIAL,PACKAGING		EA							*		
			8135-906-1344	588002-3 <05259>	CUSHIONING MATERIAL,PACKAGING		EA							*		
			8305-262-1672	<81348>	CLOTH,FELT-NONWOVEN,75 PCT... WOOL,25 PCT COTTON,60 IN.W, 25 YD TO 45 YD LG,0.060 IN.THK,GRAY OR BLACK, MOTHPROOF,FED C-F-206		SF			*	*	*		*		

(1) SOURCE, MAINT AND REC CODE (a) SOURCE CODE	(b) MAINT LEVEL	(c) REC CODE	(2) FEDERAL STOCK NUMBER	REFERENCE NUMBER	(3) DESCRIPTION	MODELS USABLE ON CH-34C	(4) UNIT OF ISSUE	(5) QTY INC IN UNIT PACK	(6) QTY INC IN UNIT	(7) 30-DAY DS/GS MAINT ALW (a) 1-20	(b) 21-50	(c) 51-100	(8) 1-YR ALW PER 100 EQUIP CNTGCY	(9) DEPOT MAINT ALW PER 100 EQUIP	(10) ILLUSTRATION (a) FIG NO	(b) ITEM NO
			8305-262-3290	<81348>	ARTIFICIAL LEATHER COTTON.... SATEEN,POLYVINYL-CHLORITE RESIN,ANTIQUE PEBBLE GRAIN SURFACE FINISH,GRAY,54 IN. W,FED CCC-A-700,CLASS 2,		YD			*	*	*		*	BULK	
			8305-267-3116	<81349>	CORD,ELASTIC-RUBBER,NATURAL.. 3/16 IN.DIA,500 FT LG, MIL-C-5650		EA			*	*	*		*		
			8305-290-5594	<81348>	FELT SHEET-95% WOOL,60 IN.... W,1/8 IN.THK,MILDEW RESISTANT,FED C-F-206,TYPE 1,<CLASSIFICATION 16R12>		SF			*	*	*		*		
			8305-633-9844	<81348>	FELT SHEET-55% EXTRANEOUS.... MATERIAL,45% WOOL,NONWOVEN, 72 IN.W,7 YD TO 15 YD LG,1 IN.THK,FED C-F-206A		SF			*	*	*		*		
			9320-141-7166	<81349>	RUBBER SHEET,CELLULAR..... SYNTHETIC,EXPLODED CELL STRUCTURE,SMOOTH FINISH, BOTH SIDES,24 IN.W,24 IN. LG,1/2 IN.THK,MIL-R-6130, GRADE B		SH			*	*	*		*		
			9320-171-4854	11M700 <76301>	RUBBER CHANNEL-SYNTHETIC,.... SOLID,WEATHER RESISTANT, 0.437 IN.H,0.062 IN.THK		FT			2	4	7		*		
			9320-241-9742	<81349>	RUBBER SHEET,SOLID..... SYNTHETIC,SMOOTH FINISH, BOTH SIDES,FUEL RESISTANT, 36 IN.W,1/16 IN.THK, MIL-R-6855,CLASS 1		SH			*	*	*		*		
			9320-241-9746	<81349>	RUBBER SHEET-SYNTHETIC,1/8... IN.THK,MIL-R-6855,CLASS II		SH			*	*	*		*		
			9320-241-9754	<81349>	RUBBER SHEET-SOLID,3/32 X 36. IN.,GRADE 60,OIL RESISTANT MIL-R-6855		SF			*	*	*		*		
			9320-241-9758	<81349>	RUBBER SHEET,SOLID..... SYNTHETIC,SMOOTH FINISH, BOTH SIDES,OIL RESISTANT, 36 IN.W,1/8 IN.THK, MIL-R-6855		SH			*	*	*		*		
			9320-241-9763	<81349>	RUBBER SHEET-SYNTHETIC,SMOOTH FINISH,BOTH SIDES,36 IN. W, 1/4 IN. THK,OIL RESISTANT MIL-R-6855		SH			*	*	*		*		
			9320-290-0896	<81349>	RUBBER,SPECIAL-SHAPED..... SECTION-MIL-R-6855,TYPE 1818		FT			*	*	*		*		
			9320-291-0416	<81349>	RUBBER SHEET,CELLULAR..... SYNTHETIC,SMOOTH FINISH, BOTH SIDES,24 IN.W,120 IN. LG,1/8 IN.THK,OIL RESISTANT,GRADE A,		SH							*		

(1) SOURCE, MAINT AND REC CODE (a) SOURCE CODE	(b) MAINT LEVEL	(c) REC CODE	(2) FEDERAL STOCK NUMBER	REFERENCE NUMBER	(3) DESCRIPTION	MODELS USABLE ON CH-34C	(4) UNIT OF ISSUE	(5) QTY INC IN UNIT PACK	(6) QTY INC IN UNIT	(7) 30-DAY DS/GS MAINT ALW (a) 1-20	(b) 21-50	(c) 51-100	(8) 1-YR ALW PER 100 EQUIP CNTGCY	(9) DEPOT MAINT ALW PER 100 EQUIP	(10) ILLUSTRATION (a) FIG NO	(b) ITEM NO
					CONTINUED MIL-R-6130										BULK	
			9320-379-2615	33197R <24617>	RUBBER SPECIAL SHAPED.....		EA			*	*	*		*		
			9320-629-0974	<81349>	RUBBER SHEET,CELLULAR..... SYNTHETIC,36 IN.W,36 IN.LG, 1/8 IN.THK,MIL-R-3133		SH			*	*	*		*		
			9320-640-9425	X591 <70485>	RUBBER,SPECIAL-SHAPED..... SECTION-SYNTHETIC,9/32 IN. W,3/8 IN.H		FT			*	*	*		*		
			9320-641-7084	MCI4046GRADE42 <38597>	RUBBER SHEET,CELLULAR.....		EA			*	*	*		*		
			9320-833-6083	5374 <75345>	RUBBER CHANNEL.....		FT			*	*	*		*		
			9320-902-7587	<81349>	RUBBER SHEET,SOLID-SYNTHETIC, SMOOTH FINISH,BOTH SIDES,36 IN.W,0.500 IN.THK,OIL AND WEATHER RESISTANT, MIL-R-6855,CLASS 2		FT							*		
			9330-260-3800	<81349>	PLASTIC SHEET-PHENOLIC..... RESIN,COTTON FABRIC BASE, SMOOTH FINISH,OPAQUE,50 IN. W,96 IN.LG,0.625 IN.THK, MIL-P-15035B		SH			*	*	*		*		
			9330-260-3805	<81349>	PLASTIC SHEET-PHENOLIC..... RESIN,COTTON FABRIC BASE, SMOOTH FINISH,OPAQUE,50 IN. W,96 IN.LG,0.312 IN.THK, MIL-P-15035B		SH			*	*	*		*		
			9330-260-3806	<81349>	PLASTIC SHEET-PHENOLIC..... COTTON FABRIC BASE,PLAIN, OPAQUE,38 IN.W,36 IN.LG, 0.250 IN.THK,MIL-P-15035		SH			*	*	*		*		
			9330-290-3458	102427-00 <97803>	PLASTIC SHEET-PHENOLIC..... COTTON FABRIC BASE OR FILLER,PLAIN,OPAQUE, W/PAPER COVERING,38 IN.W, 48 IN.LG,0.031 IN.THK, MIL-P-15035,TYPE FBG		SH			*	*	*		*		
			9330-290-3461	<81349>	PLASTIC SHEET-PHENOLIC..... RESIN,COTTON FABRIC,PLAIN, OPAQUE,1/8 IN.W,1/8 IN.LG, 1/16 IN.THK,MIL-P-15035FBG		SH			*	*	*		*		
			9330-576-3980	<81349>	PLASTIC SHEET-PHENOLIC..... COTTON FABRIC BASE OR FILLER,PLAIN,OPAQUE,29.500 IN.TO 38 IN.W,36 IN.TO 48 IN.LG,1/16 IN.THK,W/PAPER COVERING,MIL-P-15035,TYPE FBM		SH			*	*	*		*		
			9330-576-3984	<81349>	PLASTIC SHEET-PHENOLIC..... RESIN,COTTON FABRIC BASE, PLAIN,OPAQUE,9 IN.W,18 IN. LG,1/8 IN.THK,W/PAPER COVERING MIL-P-15035		SH			*	*	*		*		

(1) SOURCE, MAINT AND REC CODE (a) SOURCE CODE	(b) MAINT LEVEL	(c) REC CODE	(2) FEDERAL STOCK NUMBER	REFERENCE NUMBER		(3) DESCRIPTION	MODELS USABLE ON CH-34C	(4) UNIT OF ISSUE	(5) QTY INC IN UNIT PACK	(6) QTY INC IN UNIT	(7) 30-DAY DS/GS MAINT ALW (a) 1-20	(b) 21-50	(c) 51-100	(8) 1-YR ALWPER 100 EQUIP CNTGCY	(9) DEPOT MAINT ALWPER 100 EQUIP	(10) ILLUSTRATION (a) FIG NO	(b) ITEM NO
			9330-585-8678	611425	<83616>	PLASTIC SHEET-PHENOLIC..... COTTON FABRIC BASE OR FILLER,PLAIN,OPAQUE,W/PAPER COVERING,38 IN.W,48 IN.LG,1 IN.THK,MIL-P-15035,TYPE FBM		SF			*	*	*		*	BULK	
			9330-585-8761		<81349>	PLASTIC SHEET-PHENOLIC..... RESIN,COTTON FABRIC BASE, SMOOTH FINISH,OPAQUE,0.375 IN.THK,MIL-P-15035B		SH			*	*	*		*		
			9505-186-9160		<81348>	WIRE,STEEL CORROSION..... RESISTING-RD,SPRING TEMPER, 0.180 IN.DIA,FED QQ-W-423		CL			*	*	*		*		
			9505-242-7527	AN995NC40-30	<81348>	WIRE,STEEL,CORROSION..... RESISTING-RD ANNEALED,0.047 IN.DIA,FED QQ-W-423		SL			*	*	*		*		
			9505-248-9846		<81348>	WIRE,STEEL,CARBON-COLD..... DRAWN,ZINC COATED,LIGHT COATING,BRIGHT,SMOOTH FINISH,0.020 IN.DIA,FED QQ-W-461,CLASS 1,1 LB		SL			*	*	*		*		
			9505-248-9848		<81348>	WIRE,STEEL,CARBON-RD,SOFT.... TEMPER,0.032 IN.DIA,FED QQ-W-661		SL			*	*	*		*		
			9505-248-9849		<81348>	WIRE,STEEL,CARBON-MEDIUM..... ZINC COATED,SOFT,COLD DRAWN,BRIGHT,SMOOTH FINISH, 0.041 IN.DIA,223 FT LG, FED QQ-W-461,1 LB		SL			*	*	*		*		
			9505-248-9851		<81348>	WIRE,STEEL,CARBON-MEDIUM..... ZINC COATED,SOFT,COLD DRAWN,BRIGHT,SMOOTH FINISH, 0.063 IN.DIA,FED QQ-W-461,1 LB		SL			*	*	*		*		
			9505-293-4208		<81348>	WIRE,STEEL,CORROSION..... RESISTING-RD,ANNEALED,0.032 IN.DIA,FED QQ-W-423		SL			*	*	*		*		
			9505-554-1420		<81348>	WIRE,STEEL,CORROSION..... RESISTING-ANNEALED,RD,0.063 IN.DIA,FED QQ-W-423		SL			*	*	*		*		
			9505-596-1660		<81348>	WIRE,STEEL,CORROSION..... RESISTING-RD,SPRING TEMPER, 0.020 IN.THK,FED QQ-W-423		SL			*	*	*		*		
			9505-596-5101		<81348>	WIRE,STEEL,CORROSION..... RESISTING-RD,ANNEALED,0.020 IN.DIA,FED QQ-W-423, COMPOSITION 302,5 LB SPOOL		SL			*	*	*		*		
			9505-640-4290		<81348>	WIRE,STEEL,CORROSION..... RESISTING-ANNEALED,0.032 IN.DIA,FED QQ-W-423		SL			*	*	*		*		
			9510-228-6373		<81348>	TOOL STEEL,CARBON..... FED QQT580GRBCLW1-10X0625		EA							*		
			9510-228-6404		<81348>	TOOL STEEL,CARBON-RD,SOLID...		EA			*	*	*		*		

(1) SOURCE, MAINT AND REC CODE (a) SOURCE CODE	(b) MAINT LEVEL	(c) REC CODE	(2) FEDERAL STOCK NUMBER	REFERENCE NUMBER	(3) DESCRIPTION	MODELS USABLE ON CH-34C	(4) UNIT OF ISSUE	(5) QTY INC IN UNIT PACK	(6) QTY INC IN UNIT	(7) 30-DAY DS/GS MAINT ALW (a) 1-20	(b) 21-50	(c) 51-100	(8) 1-YR ALW PER 100 EQUIP CNTGCY	(9) DEPOT MAINT ALW PER 100 EQUIP	(10) ILLUSTRATION (a) FIG NO	(b) ITEM NO
					CONTINUED SPHEROIDIZE,ANNEALED, GROUND SURFACE FINISH,0.188 IN.DIA,3 FT LG,FED QQ-T-580,GRADE B, CLASS W1-10										BULK	
			9510-228-6411	<81348>	TOOL STEEL,CARBON-RD,SOLID... SPHEROIDIZE ANNEALED, GROUND SURFACE FINISH,0.250 IN.DIA,3 FT LG,FED QQ-T-580,GRADE B,CLASS W1-10		EA			*	2	2		*		
			9530-236-8429	<81348>	ALUMINUM ALLOY ROD-RD,SOLID.. <2024-T4>,1/2 IN.DIA,10 FT TO 12 FT LG,FED QQ-A-225/6		FT			*	*	*		*		
			9510-243-7618	<81348>	TOOL STEEL,CARBON-DRILL..... ROD,RD,SPHEROIDIZE,5/32 IN. DIA,3 FT.LG,FED QQ-T-580 GRADE C		EA			*	*	*		*		
			9510-287-9854	<81349>	STEEL BAR,ALLOY,COLD..... FINISHED-ANNEALED,HEX,3/4 IN.ACROSS FLAT,10 FT TO 12 FT LG,MIL-S-5000		FT			*	*	*		*		
			9510-529-8689	EAB622-2 <81996>	STEEL BAR,ALLOY,COLD FINISH.. RD,1/2 IN.DIA,6FT.-20FT.LG, MIL-S-6758		FT			*	*	*		*		
			9515-184-8808	ANQQS685 <81352>	STEEL STRIP,ALLOY,HOT..... ROLLED-ANNEALED,0.0625 IN. THK,18 IN.W,72 IN.LG, MIL-S-18729,CONDITION A		SP			*	*	*		*		
			9515-184-8815	<81349>	STEEL SHEET,CORROSION..... RESISTING,COLD ROLLED-24 IN.W,96 IN.LG,0.025 IN.THK, MIL-S-5059A		SH			*	*	*		*		
			9530-236-1345	<81348>	ALUMINUM ALLOY BAR-2-1/2 IN.. W,10 FT TO 12 FT LG,2 IN. THK,FED QQ-A-267,2024-T4		FT			*	*	*		*		
			9530-236-8429	<81348>	ALUMINUM ALLOY ROD..... FED QQA225-62024T4 1-2		FT			*	*	*		*		
			9535-066-6921	<81348>	ALUMINUM SHIM STOCK..... LAMINATED 24 IN.W,48 IN.LG, 0.128 IN.THK,FED QQ-A-250/1		SH			*	*	*		*		
			9535-084-4372	<81348>	ALUMINUM ALLOY SHEET..... <GR6061-T6>,36 IN.W,72 IN. LG,0.020 IN.THK,FED QQ-A-250/11		SH			*	*	*		*		
			9535-084-4420	<81348>	ALUMINUM ALLOY SHEET..... <GR5052-O>,36 IN.W,72 IN. LG,0.040 IN.THK,FED QQ-A-250/8		SH							*		
			9535-084-4519	<81348>	ALUMINUM ALLOY SHEET..... <GR7075-T6>,ALCLAD,36 IN.W,		SH			*	*	*		*		

(1) SOURCE, MAINT AND REC CODE (a) SOURCE CODE	(b) MAINT LEVEL	(c) REC CODE	(2) FEDERAL STOCK NUMBER	REFERENCE NUMBER	(3) DESCRIPTION	MODELS USABLE ON CH-34C	(4) UNIT OF ISSUE	(5) QTY INC IN UNIT PACK	(6) QTY INC IN UNIT	(7) 30-DAY DS, GS MAINT ALW (a) 1-20	(b) 21-50	(c) 51-100	(8) 1-YR ALW PER 100 EQUIP CNTGCY	(9) DEPOT MAINT ALW PER 100 EQUIP	(10) ILLUSTRATION (a) FIG NO	(b) ITEM NO
					CONTINUED 72 IN.LG,0.125 IN.THK, FED QQ-A-250/13										BULK	
			9535-084-4532	<81348>	ALUMINUM ALLOY SHEET..... <GR7075-T6>,ALCLAD,36 IN.W, 72 IN.LG,0.071 IN.THK, FED QQ-A-250/13		SH			*	*	*		*		
			9535-084-4551	<81348>	ALUMINUM ALLOY SHEET..... <GR2024-T3>,ALCLAD,36 IN.W, 72 IN.LG,0.040 IN.THK, FED QQ-A-250/5		SH			*	*	*		*		
			9535-084-4592	<81348>	ALUMINUM ALLOY SHEET..... <GR7075-O>,ALCLAD,36 IN.W, 72 IN.LG,0.050 IN.THK, FED QQ-A-250/13		SH			*	*	*		*		
			9535-085-4133	<81348>	ALUMINUM ALLOY SHEET..... <GR6061-T6>,36 IN.W,72 IN. LG,0.032 IN.THK,FED QQ-A-250/11		SH			*	*	*		*		
			9535-085-4157	<81348>	ALUMINUM ALLOY SHEET..... <GR2024-O>,ALCLAD,36 IN.W, 72 IN.LG,0.032 IN.THK, FED QQ-A-250/5		SH			*	*	*		*		
			9535-085-4408	<81348>	ALUMINUM ALLOY SHEET..... <GR6061-T6>,36 IN.W,72 IN. LG,0.040 IN.THK,FED QQ-A-250/11		SH			*	*	*		*		
			9535-085-4420	<81348>	ALUMINUM ALLOY SHEET..... <GR2024-O>,ALCLAD,36 IN.W, 72 IN.LG,0.090 IN.THK, FED QQ-A-250/5		SH			*	*	*		*		
			9535-086-9729	<81348>	ALUMINUM ALLOY SHEET..... <GR2024-T3>,ALCLAD,36 IN.W, 72 IN.LG,0.032 IN.THK, FED QQ-A-250/5		SH			*	*	*		*		
			9535-086-9753	<81348>	ALUMINUM ALLOY SHEET..... <GR2024-O>,ALCLAD,36 IN.W, 72 IN.LG,0.050 IN.THK, FED QQ-A-250/5		SH			*	*	*		*		
			9535-086-9809	<81348>	ALUMINUM ALLOY SHEET..... <GR2024-O>,ALCLAD,36 IN.W, 72 IN.LG,0.051 IN.THK, FED QQ-A-250/5		SH			*	*	*		*		
			9535-086-9860	<81348>	ALUMINUM ALLOY SHEET..... <GR7075-O>,ALCLAD,36 IN.W, 72 IN.LG,0.032 IN.THK, FED QQ-A-250/13		SH			*	*	*		*		
			9535-086-9884	<81348>	ALUMINUM ALLOY SHEET..... <GR5052H32>,36 IN.W,72 IN. LG,0.063 IN.THK,FED QQ-A-250/8		SH			*	*	*		*		
			9535-167-2151	<81348>	COPPER SHEET-COLD-ROLLED.....		SH			*	*	*		*		

(1) SOURCE, MAINT AND REC CODE (a) SOURCE CODE	(b) MAINT LEVEL	(c) REC CODE	(2) FEDERAL STOCK NUMBER	REFERENCE NUMBER	(3) DESCRIPTION	MODELS USABLE ON CH-34C	(4) UNIT OF ISSUE	(5) QTY INC IN UNIT PACK	(6) QTY INC IN UNIT	(7) 30-DAY DS/GS MAINT ALW (a) 1 20	(b) 21 50	(c) 51-100	(8) 1-YR ALWPER 100 EQUIP CNTGCY	(9) DEPOT MAINT ALWPER 100 EQUIP	(10) ILLUSTRATION (a) FIG NO	(b) ITEM NO
					CONTINUED SOFT-ANNEALED,36 IN.W,0.032 IN.THK,144 IN.LG, FED QQ-C-576										BULK	
			9535-167-2219	<81348>	ALUMINUM SHEET-GR1100-H14,36. IN.W,144 IN.LG,0.032 IN. THK,FED QQ-A-250/1		SH			*	*	*		*		
			9535-167-2247	<81348>	ALUMINUM ALLOY SHEET..... <GR2024-T0>,36 IN.W,144 IN. LG,0.025 IN.THK, FED QQ-A-355B		SH			*	*	*		*		
			9535-167-2267	<81348>	ALUMINUM ALLOY SHEET..... <GR2024-0>,36 IN.W,144 IN. LG,0.040 IN.THK,FED QQ-A-250/5		SH			*	*	*		*		
			9535-167-2274	<81348>	ALUMINUM ALLOY SHEET..... 2024-T3,36 IN.W,144 IN.LG, 0.012 IN.THK,FED QQ-A-362		SH			*	*	*		*		
			9535-167-2278	<81348>	ALUMINUM ALLOY SHEET-36 IN.W, 144 IN.LG,0.025 IN.THK,FED QQ-A-250/5,2024-T3		SH			*	*	*		*		
			9535-167-2279	<81348>	ALUMINUM ALLOY SHEET..... <GR2024-T3>,36 IN.W,144 IN. LG,0.032 IN.THK, FED QQ-A-250/5		SH			*	*	*		*		
			9535-167-2280	<81348>	ALUMINUM ALLOY SHEET..... <GR2024-T3>,36 IN.W,144 IN.LG,0.040 IN.THK FED QQ-A-362		SH			*	*	*		*		
			9535-232-0378	<81348>	ALUMINUM ALLOY SHEET..... <GR2024-T3>,48 IN.W,144 IN. LG,0.063 IN.THK, FED QQ-A-250/5		SH			*	*	*		*		
			9535-232-0405	<81348>	ALUMINUM ALLOY SHEET..... ALCLAD,2024 -T3,48 IN.W,144 IN.LG,0.090 IN.THK,FED QQ-A-362		SH							*		
			9535-232-0501	<81348>	ALUMINUM ALLOY SHEET..... ALCLAD,2024-0,48 IN.W,144 IN.LG,0.050 IN.THK,FED QQ-A-362		SH							*		
			9535-232-0529	<81348>	ALUMINUM ALLOY SHEET..... <GR2024-0>,48 IN.W,144 IN. LG,0.090 IN.THK,FED QQ-A-250/5		SH			*	*	*		*		
			9535-232-0569	<81348>	ALUMINUM ALLOY SHEET..... <GR2024-T3>,48 IN.W,144 IN. LG,0.050 IN.THK,FED QQ-A-250		SH							*		
			9535-232-0583	<81348>	ALUMINUM ALLOY SHEET-2024-T3, 48 IN.W,144 IN.LG,10.040 IN.THK,FED QQ-A-250		SH							*		

(1) SOURCE, MAINT AND REC CODE (a) SOURCE CODE	(b) MAINT LEVEL	(c) REC CODE	(2) FEDERAL STOCK NUMBER	REFERENCE NUMBER		(3) DESCRIPTION	MODELS USABLE ON CH-34C	(4) UNIT OF ISSUE	(5) QTY INC IN UNIT PACK	(6) QTY INC IN UNIT	(7) 30-DAY DS/GS MAINT ALW (a) 1-20	(b) 21-50	(c) 51-100	(8) 1-YR ALW PER 100 EQUIP CNTGCY	(9) DEPOT MAINT ALW PER 100 EQUIP	(10) ILLUSTRATION (a) FIG NO	(b) ITEM NO
			9535-232-1881	QQA250-116061T6-020	<81348>	ALUMINUM ALLOY.....		SH			*	*	*		*	BULK	
			9535-232-6870		<81348>	ALUMINUM ALLOY SHEET..... <GR5052-H32>,48 IN.W,144 IN.LG,0.063 IN.THK,FED QQ-A-250/8		SH							*		
			9535-232-7535		<81348>	ALUMINUM ALLOY SHEET ALCLAD,. <GR7075-T6>,48 IN.W,144 IN. LG,0.032 IN.THK,FED QQ-A-287		SH			*	*	*		*		
			9535-232-7539		<81348>	ALUMINUM ALLOY SHEET..... ALCLAD,7075-T6 48 IN.W,144 IN.LG,0.063 IN.THK,FED QQ-A-287		SH			*	*	*		*		
			9535-232-7541		<81348>	ALUMINUM ALLOY SHEET..... <GR7075-T6>,48 IN.W,144 IN. LG,0.071 IN.THK,FED QQ-A-250/13		SH			*	*	*		*		
			9535-232-7597		<81348>	ALUMINUM ALLOY SHEET-48 IN... W,144 IN.LG,0.040 IN.THK, FED QQ-A-250/8B,5052H32		SH							*		
			9535-236-7075		<81348>	ALUMINUM ALLOY SHEET..... <GR7075-T6>,48 IN.W,0.125 IN.THK,144 IN.LG, FED QQ-A-287		SH			*	*	*		*		
			9535-236-7081		<81348>	ALUMINUM ALLOY SHEET..... 7075-O,48 IN.W,144 IN.LG, 0.050 IN.THK,FED QQ-A-287		SH			*	*	*		*		
			9535-243-1875		<81349>	SHIM STOCK,LAMINATE..... ALL LAMINATED <0.002 LAMINATIONS>,8 IN.W, 48 IN.LG,0.062 IN.THK, MIL-B-5697		SH			*	*	*		*		
			9535-249-5809		<81348>	ALUMINUM ALLOY SHEET..... ALCLAD,7075-T6,48 IN.W,144 IN.LG,0.050 IN.THK,FED QQ-A-287		SH			*	*	*		*		
			9535-249-5811		<81348>	ALUMINUM ALLOY SHEET-36 IN... W,144 IN.LG,0.032 IN.THK, 7075-T6,FED QQ-A-287		SH			*	*	*		*		
			9535-250-6502		<81348>	ALUMINUM ALLOY SHEET..... FED QQ-A-327		SH			*	*	*		*		
			9535-267-2236		<81348>	ALUMINUM ALLOY SHEET-0.032... IN.THK,FED QQ-A-287-O		SH			*	*	*		*		
			9535-288-0675		<81348>	ALUMINUM ALLOY SHEET-ALCLAD,. 24ST3,0.100 IN.THK, FED QQ-A-362		SH			*	*	*		*		
			9535-542-4705	AZ31B	<81348>	MAGNESIUM ALLOY SHEET-46..... IN.W,144 IN.LG,0.032 IN. THK,COMPOSITION AZ31B,H24 TEMPER,FED QQ-M-44A		SH			*	*	*		*		
			9535-554-1417		<81348>	ALUMINUM ALLOY SHEET-24SO,36. IN. W,43 IN. LG,0.063 IN.		SH			*	*	*		*		

(1) SOURCE, MAINT AND REC CODE (a) SOURCE CODE	(b) MAINT LEVEL	(c) REC LEVEL CODE	(2) FEDERAL STOCK NUMBER	REFERENCE NUMBER	(3) DESCRIPTION	MODELS USABLE ON CH-34C	(4) UNIT OF ISSUE	(5) QTY INC IN UNIT PACK	(6) QTY INC IN UNIT	(7) 30-DAY DS/GS MAINT ALW (a) 1-20	(b) 21-50	(c) 51-100	(8) 1-YR ALW PER 100 EQUIP CNTGCY	(9) DEPOT MAINT ALW PER 100 EQUIP	(10) ILLUSTRATION (a) FIG NO	(b) ITEM NO
					CONTINUED THK,FED QQ-A-362										BULK	
			9535-554-1419	<81348>	COMMERCIAL BRASS STRIP-8 IN.. W,24 IN.LG,0.005 IN.THK, FED QQ-B-613		FT			*	*	*		*		
			9535-575-5982	<81348>	MAGNESIUM ALLOY SHEET..... COMP Z31B-O,36 IN.W,72 IN. LG,0.040 IN.THK,FED QQ-M-44		SH			*	*	*		*		
			9535-596-3767	<81348>	MAGNESIUM ALLOY SHEET-48 IN.. W,0.040 IN.THK,144 IN.LG, FED QQ-M-44,ANNEALED		SH			*	*	*		*		
			9535-686-5783	<81348>	MAGNESIUM ALLOY SHEET..... COMP Z31B-H24,36 IN.W,72 IN.LG,0.032 IN.THK, FED QQ-M-44		SH			*	*	*		*		

SECTION II

FUNCTIONAL GROUP 70

MAINTENANCE SUPPLIES

(1) SOURCE, MAINT AND REC CODE (a) SOURCE CODE	(b) MAINT LEVEL	(c) REC CODE	(2) FEDERAL STOCK NUMBER	REFERENCE NUMBER	(3) DESCRIPTION	MODELS USABLE ON CH-34C	(4) UNIT OF ISSUE	(5) QTY INC IN UNIT PACK	(6) QTY INC IN UNIT	(7) 30-DAY DS/GS MAINT ALW (a) 1-20	(b) 21-50	(c) 51-100	(8) 1-YR ALW PER 100 EQUIP CNTGCY	(9) DEPOT MAINT ALW PER 100 EQUIP	(10) ILLUSTRATION (a) FIG NO	(b) ITEM NO
			1560-624-0175	EAB20 <81996>	POLISHING KIT,PLEXIGLASS-C/O. ONE 4 OZ CONTAINER OF POLISHING COMPOUND CONFORMING TO MIL-C-18767, ONE 4 OZ BOTTLE OF CLEANER & GLAZE IN CONTAINER CONFORMING TO FED TT-N-95, TYPE 2,ONE PIECE OF 9 IN. BY 16 IN.PLAIN LINTLESS WIPER FREE OF ALL SEAMS CONFORMING TO DDD-D-301, ONE PIECE OF 18 IN.BY 26 IN.WHITE POLISHING CLOTH CONFORMING TO CCC-C-440C ONE EACH BLOCK OF WOOD OR SEMI-HARD RUBBER W/SPONGE RUBBER PAD,1-3/4 IN.BY 2-5/8 IN.BY 3/4 IN.WITH 1/4 IN.SPONGE RUBBER CEMENTED TO BLOCK,ONE PACKAGE OF CLEANEX OR EQUAL <POCKET PACKET>,AEROSOL CAN PER PPP-C-96,TYPE 9, CLASS 1,2 OR 3 W/FOAM VALVE IS ACCEPTABLE AS ALTERNATE METHOD OF PACKING OF POLISHING COMPOUNDS		EA			*	*	*		*	MSUP	
			1560-856-9222	S1607-7021 <78286>	PARTS KIT,REINFORCED..... FIBERGLASS-CONTAINS THE FOLLOWING ITEMS <KIT CONTAINER,RESIN,ACTIVATOR, TAPE,STIRRING BLADE, SANDPAPER,FILLER MATERIAL, BRUSH,RAZOR BLADE & INSTRUCTIONS>		EA			*	*	*		*		
			5350-161-9715	240 <10646>	CLOTH,ABRASIVE-ALUMINUM..... OXIDE,GRADE NO.7/0,9 IN.W, 11 IN.LG,FED P-C-451A,TYPE 1,CLASS 1		SV			*	*	*		*		
			5350-192-5049	<81348>	CLOTH,ABRASIVE-ALUMINUM..... OXIDE,GRADE NO.120,CLOSED COATING,9 IN.W,11 IN.LG, FED P-C-451,TYPE 1,CLASS 1		SV			*	*	*		*		
			5350-192-5050	<81348>	CLOTH,ABRASIVE-ALUMINUM..... OXIDE,GRADE 4/0,9 IN.W, 11 IN.LG,FED P-C-451A,TYPE 1,CLASS 1		SV			*	*	*		*		
			5350-224-7201	<81348>	PAPER,ABRASIVE-SILICON..... CARBIDE,GRADE NO.10/0,40 LB WT,WATERPROOF,CLOSED COATING,9 IN.W,11 IN.LG, FED P-P-101		SV			*	*	*		*		

(1) SOURCE, MAINT AND REC CODE (a) SOURCE CODE	(b) MAINT LEVEL	(c) REC CODE	(2) FEDERAL STOCK NUMBER	REFERENCE NUMBER	(3) DESCRIPTION	MODELS USABLE ON CH-34C	(4) UNIT OF ISSUE	(5) QTY INC IN UNIT PACK	(6) QTY INC IN UNIT	(7) 30-DAY DS/GS MAINT ALW (a) 1-20	(b) 21-50	(c) 51-100	(8) 1-YR ALW PER 100 EQUIP CNTGCY	(9) DEPOT MAINT ALW PER 100 EQUIP	(10) ILLUSTRATION (a) FIG NO	(b) ITEM NO
			5350-224-7205	<81348>	PAPER,ABRASIVE-SILICON..... CARBIDE,GRADE NO.8/0,40 LB WT,WATERPROOF,CLOSED COATING,9 IN.W,11 IN.LG, FED P-P-101		SV			*	*	*		*	MSUP	
			5350-246-0330	<81348>	CLOTH,ABRASIVE-ALUMINUM..... OXIDE,JEAN CLOTH BACKING, CLOSED COATING,9 IN.W,11 IN.LG,GRADE 9/0,FED P-C-451,TYPE 1,CLASS 1		SV			*	*	*		*		
			5350-286-4851	<81349>	ALUMINUM WOOL-PAPER WRAPPED,. MIL-A-4864,TYPE 2,1 LB		PK			*	*	*		*		
			5610-641-0427	<81349>	WALKWAY COMPOUND,NONSLIP..... ROUGH TYPE,BLACK,APPLIED W/BRUSH,MIL-W-5044,TYPE 2, 1 GAL		CN			*	*	*		*		
			5610-641-0429	<81349>	WALKWAY COMPOUND,NONSLIP..... SMOOTH,BLACK,APPLIED W/BRUSH,MIL-W-5044,TYPE 1, 1 GAL		CN			*	*	*		*		
			5970-159-1598	1940172 <80064>	INSULATING COMPOUND,..... ELECTRICAL-PASTE FORM, NONCORROSIVE TO METALS & NONMETALS,MIL-I-8660,8 OZ		TU			*	*	*		*		
			5970-284-8410	MX1034U <80058>	INSULATION TAPE,ELECTRICAL... PLASTIC,VINYL CHLORIDE, BLACK,3/4 IN.W,36 YD LG, 0.007 IN.THK,MIL-I-7798		RL			*	*	*		*		
			5970-644-3167	<81348>	INSULATION TAPE,ELECTRICAL... COTTON,BLACK,ADHESIVE, RUBBER COATING,FOR GENERAL PURPOSE USE,3/4 IN.W,85 FT LG,0.015 IN.THK,FED HH-I-00510		EA			*	*	*		*		
			6810-184-4796	<81348>	ACETONE,TECHNICAL-1 DEG C.... BOILING RANGE,BOILING RANGE INCL 56.1 DEG C,DETERMINED AT 760 MM PRESSURE,0.791 TO 0.793 SP GR AT 20 DEG/20 DEG C,FED O-A-518,5 GAL DRUM		GL			*	*	*		*		
			6810-184-4800	<81348>	TRICHLOROETHYLENE,TECHNICAL.. LIQUID FORM,86.0 DEG C INITIAL BP TEMP,87.5 DEG C INTERMEDIATE TEMP W/95 MIN DISTILLED,90 DEG C DRY POINT,BOILING RANGE DETERMINED AT 760 MM PRESSURE,1.445 TO 1.465 SP GR AT 25/25 DEG C, FED O-T-634,TYPE 2,55 GAL		DR			*	*	*		*		

(1) SOURCE, MAINT AND REC CODE (a) SOURCE CODE	(b) MAINT LEVEL	(c) REC CODE	(2) FEDERAL STOCK NUMBER	REFERENCE NUMBER		(3) DESCRIPTION	MODELS USABLE ON CH-34C	(4) UNIT OF ISSUE	(5) QTY INC IN UNIT PACK	(6) QTY INC IN UNIT	(7) 30-DAY DS/GS MAINT ALW (a) 1-20	(b) 21-50	(c) 51-100	(8) 1-YR ALWPER 100 EQUIP CNTGCY	(9) DEPOT MAINT ALWPER 100 EQUIP	(10) ILLUSTRATION (a) FIG NO	(b) ITEM NO
																MSUP	
			6810-201-0907		<81348>	ALCOHOL,DENATURED-COLORLESS,. FED O-E-760,GRADE III, 5 GAL PAIL		CN			*	*	*		*		
			6810-222-9641	MS36043-3	<96906>	HYDROCHLORIC ACID,TECHNICAL.. FED O-H-765,5 PT		BT			*	*	*		*		
			6810-223-9067		<81348>	NAPHTHA,AROMATIC-DISTILLED... FROM PETROLEUM,88 DEG C INITIAL BP TEMP,140 DEG C DRY POINT,BOILING RANGE DETERMINED AT 760 MM PRESSURE,0.810 TO 0.860 SP GR AT 20 DEG/20 DEG C, FED TT-N-97,TYPE 2,1 GAL CN		GL			*	*	*		*		
			6810-227-1281		<81349>	TRICRESYL PHOSPHATE-BLENDED.. FORM,MIL-T-9188,TYPE 2, 1 GAL CAN		GL			*	*	*		*		
			6810-237-2918	MS36047-5	<96906>	NITRIC ACID,TECHNICAL-61%.... MIN AQUEOUS SOLUTION BY WT OF NITRIC ACID,1.375 MIN SP GR AT 15.56 DEG/15.56 DEG C,FED O-N-350,5 PT BOTTLE		PT			*	*	*		*		
			6810-238-8119		<81348>	NAPHTHA,ALIPHATIC-85.0 DEG C. INITIAL BP TEMP, INTERMEDIATE TEMP W/MIN PERCENTAGES DISTILLED 102.0 DEG C 10% MIN DISTILLED, 107.0 DEG C 50% MIN DISTILLED,121.0 DEG C 90% MIN DISTILLED,143 DEG C DRY POINT,BOILING RANGE DETERMINED AT 760 MM PRESSURE,0.708 TO 0.768 SP GR AT 20 DEG/20 DEG C, DISTILLED FROM PETROLEUM, FED TT-N-95,1 GAL CAN		GL			*	*	*		*		
			6810-264-6618		<81348>	SODIUM,BICARBONATE,TECHNICAL. 98% MIN ASSAY AS SODIUM BICARBONATE,FED O-S-576, 1 LB CARTON		LB			*	*	*		*		
			6810-264-6715	MOLYKOTETYPEZ	<94499>	MOLYBDENUM DISULFIDE,..... TECHNICAL-98.5 % MIN ASSAY AS MOLYBDENUM DISULFIDE, POWDER FORM,MIL-M-7866,1 LB		LB			*	*	*		*		
			6810-264-9056		<81348>	SODIUM BORATE,DECAHYDRATE,... TECHNICAL-POWDERED FORM,FED SS-S-535,TYPE III,5 LB		CT			*	*	*		*		
			6810-281-1864		<81348>	ACETONE,TECHNICAL-1 DEG C.... BOILING RANGE,FED O-A-51B,		DR			*	*	*		*		

(1) SOURCE, MAINT AND REC CODE (a) SOURCE CODE	(b) MAINT LEVEL	(c) REC CODE	(2) FEDERAL STOCK NUMBER	REFERENCE NUMBER	(3) DESCRIPTION	MODELS USABLE ON CH-34C	(4) UNIT OF ISSUE	(5) QTY INC IN UNIT PACK	(6) QTY INC IN UNIT	(7) 30-DAY DS/GS MAINT ALW (a) 1-20	(b) 21-50	(c) 51-100	(8) 1-YR ALW PER 100 EQUIP CNTGCY	(9) DEPOT MAINT ALW PER 100 EQUIP	(10) ILLUSTRATION (a) FIG NO	(b) ITEM NO
					CONTINUED										MSUP	
					55 GAL											
			6810-281-2002	9060184 <18876>	TOLUENE,TECHNICAL..... DISTILLATION DATA 3 DEG C BOILING RANGE,BOILING RANGE INCL 110.6 DEG C,BOILING RANGE DETERMINED AT 760 MM PRESSURE,0.860 TO 0.870 SP GR AT 20 DEG/20 DEG C, FED TT-T-548.1 GAL CAN		GL			*	*	*		*		
			6810-290-0048	<81348>	TOLUENE,TECHNICAL-LIQUID..... FORM,109 DEG C INITIAL BP TEMP,113 DEG C DRY POINT, BOILING RANGE DETERMINED AT 760 MM PRESURE,0.860 TO 0.870 SP GR AT 20/20 DEG C, FED TT-T-548,5 GAL		PL			*	*	*		*		
			6810-290-0051	<81349>	NAPHTHA,COMPASS-260 DEG C.... BP TEMP,32 DEG C FLASH POINT,MIL-C-5020,1 QT CAN		QT			*	*	*		*		
			6810-584-4070	<81348>	XYLENE,TECHNICAL-123 DEG C... INITIAL BP TEMP,155 DEG C DRY POINT,FED TT-X-916, GRADE B,5 GAL		CN							*		
			6810-597-2747	<81349>	TRICRESYL PHOSPHATE-BLENDED.. FORM,MIL-T-9188,TYPE 3, 200 CC		CN			*	*	*		*		
			6810-598-6600	<81348>	XYLENE,TECHNICAL-123 DEG C... INITIAL BP TEMP, INTERMEDIATE TEMP W/MIN PERCENTAGE DISTILLED 145 DEG C,90 % MIN DISTILLED, 155 DEG C DRY POINT,BOILING RANGE DETERMINED AT 760 MM PRESSURE,0.850 TO 0.870 SP GR AT 15.56 DEG/15.56 DEG C,FED TT-X-916,GRADE B,1 GAL CAN		GL			*	*	*		*		
			6810-855-6160	<81348>	2-PROPANOL,TECHNICAL-81.3 DEG C INITIAL BP TEMP,83 DEG C DRY POINT,BOILING RANGE DETERMINED AT 760 MM PRESSURE,0.756 TO 0.787 SP GR AT 20 DEG/20 DEG C,FED TT-I-735,GRADE B,5 GAL		PL			*	*	*		*		
			6810-893-8138	MS36053-6 <96906>	SULFURIC ACID,ELECTROLYTE.... 1.278 TO 1.285 SP GR AT 15.56/15.56 DEG C,FED O-S-801,CLASS 3,15 GAL POLYETHYLENE		DR			*	*	*		*		
			6840-721-6055	<81348>	DEODORANT,GENERAL PURPOSE....		CN			*	*	*		*		

(1) SOURCE, MAINT AND REC CODE (a) SOURCE CODE	(b) MAINT LEVEL	(c) REC CODE	(2) FEDERAL STOCK NUMBER	REFERENCE NUMBER	(3) DESCRIPTION	MODELS USABLE ON CH-34C	(4) UNIT OF ISSUE	(5) QTY INC IN UNIT PACK	(6) QTY INC IN UNIT	(7) 30-DAY DS/GS MAINT ALW (a) 1-20	(b) 21-50	(c) 51-100	(8) 1-YR ALW PER 100 EQUIP CNTGCY	(9) DEPOT MAINT ALW PER 100 EQUIP	(10) ILLUSTRATION (a) FIG NO	(b) ITEM NO
					CONTINUED LIQUID FORM,DISPERSED AS SPRAY FROM PRESSURIZED DISPENSER,FED P-D-00200, SIZE 2,16 OZ										MSUP	
			6850-201-1218	<81349>	CORROSION REMOVING COMPOUND.. LIQUID FORM,55.22 DEG C, MIN FLASH POINT, MIL-M-10578,1 GAL BOTTLE		GL			*	*	*		*		
			6850-264-6571	8790672 <19203>	DESICCANT,ACTIVATED-NOT..... IMPREGNATED W/MOISTURE INDICATOR,MIL-D-3464,300 BAGS,8 UNITS PER BAG,200 LB		DR			*	*	*		*		
			6850-264-6572	8790670-1 <19203>	DESICCANT,ACTIVATED-NOT..... IMPREGNATED W/MOISTURE INDICATOR,MIL-D-3464,150 BAGS,16 UNITS PER BAG, 200 LB		DR			*	*	*		*		
			6850-264-9038	<81348>	DRY CLEANING SOLVENT-LIQUID.. FORM,FOR DRY CLEANING TEXTILE MATERIALS,FED P-D-680,TYPE 1,5 GAL		PL			*	*	*		*		
			6850-281-2031	<81349>	CORROSION PREVENTIVE AIRCRAFT ENGINE-COMPATIBLE ENGINE LUBRICATING OIL PER SPEC MIL-L-6081 OR MIL-L-6082, MIL-C-6529,TYPE 1,5 GAL		PL			*	*	*		*		
			6850-341-8430	2911C1728S <99171>	WATER REPELLENT KIT.....		KT			*	*	*		*		
			6850-664-9067	DYKEMSTEELBLUE <98148>	LAYOUT DYE-BLUE,1 PT CAN.....		PT			*	*	*		*		
			6850-901-0591	<81349>	ANTI-ICING FLUID-MIL-A-8243,. 5 GAL CAN		GL			*	*	*		*		
			6850-935-0995	<81349>	CLEANING COMPOUND,AIRCRAFT... SURFACE-POWDER FORM, ALKALINE WATER BASE, MIL-C-25769,TYPE 2,4 BAGS PER DRUM,20 LB		DR			*	*	*		*		
			7510-266-6712	8783476 <19203>	TAPE,PRESSURE SENSITIVE..... ADHESIVE-PAPER BACKING, OPAQUE,1 IN.W,60 YD LG, 3 IN.ID CORE,FOR USE W/PAINT,DOPE,VARNISH & OTHER FINISHING MATERIALS TO PROTECT SURFACE AREAS NOT TO BE COVERED BY THE FINISHING MATERIALS,FED UU-T-106,TYPE 1		RL			*	*	*		*		
			7510-550-7125	MS16698-21 <96906>	TAPE,PRESSURE SENSITIVE..... ADHESIVE-CELLOPHANE BACKING,OPAQUE,YELLOW,1/2 IN.W,72 YD LG,FOR NONPERMANENT APPLICATIONS, FED L-T-90,TYPE 1,CLASS B		RL			*	*	*		*		

(1) SOURCE, MAINT AND REC CODE (a) SOURCE CODE	(b) MAINT LEVEL	(c) REC CODE	(2) FEDERAL STOCK NUMBER	REFERENCE NUMBER		(3) DESCRIPTION	MODELS USABLE ON CH-34C	(4) UNIT OF ISSUE	(5) QTY INC IN UNIT PACK	(6) QTY INC IN UNIT	(7) 30-DAY DS/GS MAINT ALW (a) 1-20	(b) 21-50	(c) 51-100	(8) 1-YR ALW PER 100 EQUIP CNTGCY	(9) DEPOT MAINT ALW PER 100 EQUIP	(10) ILLUSTRATION (a) FIG NO	(b) ITEM NO
			7510-550-7126	MS16698-18	<96906>	TAPE,PRESSURE SENSITIVE..... ADHESIVE-RED,OPAQUE,1/2 IN. W,72 YD LG,3 IN.CORE ID, FED L-T-90,TYPE 1,CLASS B		RL			*	*	*		*	MSUP	
			7510-550-7127		<81348>	TAPE,PRESSURE SENSITIVE..... ADHESIVE-CELLOPHANE BACKING,WHITE,OPAQUE,1/2 IN.W,72 YD LG,3 IN.CORE ID, FED L-T-90,TYPE 1,CLASS B		RL			*	*	*		*		
			7510-550-7129	MS16698-14	<96906>	TAPE,PRESSURE SENSITIVE..... ADHESIVE-CELLOPHANE BACKING,OPAQUE,GREEN,1/2 IN.W,72 YD LG,3 IN.ID CORE		RL			*	*	*		*		
			7510-634-3267		<81348>	TAPE,PRESSURE SENSITIVE..... ADHESIVE-CELLOPHANE BACKING,OPAQUE,LIGHT BLUE, 1/2 IN.W,72 YD LG,3 IN.ID CORE,FOR NON-PERMANENT APPLICATIONS,FED L-T-90, TYPE 1,CLASS B		RL			*	*	*		*		
			7920-205-1711		<81348>	RAG,WIPING-COTTON,BLEACHED... OR UNBLEACHED,MIXTURE OF WHITE & COLORED,FOR GENERAL PURPOSE USE,FED DDD-R-30, CLASS 2,GRADE B,50 LB		BE			*	*	*		*		
			7920-823-9772	DW61-1000-22	<95135>	TOWEL,PAPER-SHEET FORM,..... 13-1/3 IN.W,293-5/16 SQ IN. AREA,100 SHEETS,BANDED, FED UU-T-00595,TYPE 3		CS			*	*	*		*		
			7930-267-5588		<81349>	WAX,AIRCRAFT-LIQUID,..... MIL-W-18723,1 GAL CAN		GL			*	*	*		*		
			7930-634-5340	4030	<77247>	POLISH,PLASTIC-LIQUID,..... ANTISTATIC,REMOVES MASKING GLUE,LUBRICATING GREASE & OIL,MIL-C-18767,TYPE 1,1 PT BOTTLE		PT			*	*	*		*		
			8010-152-3245		<81348>	LINSEED OIL,BOILED-USE IN.... PAINT,VARNISH,ENAMEL,& OTHER SIMILAR TYPES OF COATING MATERIALS,FED TT-L-190,1 GAL		GL			*	*	*		*		
			8010-160-5787		<81348>	THINNER,DOPE AND LACQUER..... CELLULOSE NITRATE BASE, FED TT-T-266,1 GAL		CN			*	*	*		*		
			8010-160-5788		<81348>	THINNER,DOPE AND LACQUER..... CELLULOSE NITRATE BASE,FED TT-T-266,5 GAL CAN		PL			*	*	*		*		
			8010-161-7370		<81348>	LACQUER-CELLULOSIC DERIVATIVE TYPE,INTERNATIONAL ORANGE, 40 MIN MAX DRY HARD TIME, USED FOR EXTERIOR PROTECTIVE COATING FOR		CN			*	*	*		*		

(1) SOURCE, MAINT AND REC CODE (a) SOURCE CODE	(b) MAINT LEVEL	(c) REC CODE	(2) FEDERAL STOCK NUMBER	REFERENCE NUMBER	(3) DESCRIPTION	MODELS USABLE ON CH-34C	(4) UNIT OF ISSUE	(5) QTY INC IN UNIT PACK	(6) QTY INC IN UNIT	(7) 30-DAY DS/GS MAINT ALW (a) 1-20	(b) 21-50	(c) 51-100	(8) 1-YR ALWPER 100 EQUIP CNTGCY	(9) DEPOT MAINT ALWPER 100 EQUIP	(10) ILLUSTRATION (a) FIG NO	(b) ITEM NO
					CONTINUED										MSUP	
					METAL,FED TT-L-32,1/2 PT											
			8010-162-5289	<81349>	THINNER,DOPE AND LACQUER..... CELLULOSE NITRATE BASE, MIL-T-6095,1 GAL		CN			*	*	*		*		
			8010-165-5535	<81349>	REMOVER,PAINT-NONFLAMMABLE... ORGANIC SOLVENT, MIL-R-25134,55 GAL		DR							*		
			8010-166-3145	MS35542-2 <96906>	LACQUER-CELLULOSIC DERIVATIVE TYPE,INSIGNIA BLUE, LUSTERLESS,40 MIN DRY TIME, BRUSH OR SPRAY APPL,FOR USE ON PRIMED METAL SURFACES AS A CAMOUFLAGE FINISH,FED TT-L-20,1 QT		CN			*	*	*		*		
			8010-166-3147	MS35542-1 <96906>	LACQUER-CELLULOSIC DERIVATIVE TYPE,JET BLACK,LUSTERLESS, 40 MIN DRY TIME,BRUSH OR SPRAY APPL,FOR USE ON PRIMED METAL SURFACES AS A CAMOUFLAGE FINISH,FED TT-L-20,1 QT		CN			*	*	*		*		
			8010-166-3150	MS35542-6 <96906>	LACQUER-CELLULOSIC DERIVATIVE TYPE,RED,LUSTERLESS,40 MIN DRY TIME,BRUSH OR SPRAY APPL,FOR USE ON PRIMED METAL SURFACES AS A CAMOUFLAGE FINISH,FED TT-L-20,1 QT		CN			*	*	*		*		
			8010-166-3152	MS35542-7 <96906>	LACQUER-CELLULOSIC DERIVATIVE TYPE,WHITE,LUSTERLESS,40 MIN DRY TIME,BRUSH OR SPRAY APPL.FOR USE ON PRIMED METAL SURFACES AS A CAMOUFLAGE FINISH,FED TT-L-20,1 QT		CN			*	*	*		*		
			8010-166-3158	MS35542-8 <96906>	LACQUER-CELLULOSIC DERIVATIVE TYPE,ORANGE YELLOW, LUSTERLESS,40 MIN DRY TIME, BRUSH OR SPRAY APPL,FOR USE ON PRIMED METAL SURFACES AS A CAMOUFLAGE FINISH,FED TT-L-20,1 QT		CN			*	*	*		*		
			8010-166-3164	<81348>	LACQUER-CELLULOSIC..... DERIVATIVE,COLORLESS,40 MIN DRY TIME,FULL GLOSS, FED TT-L-32,1 QT		CN			*	*	*		*		
			8010-242-2089	<81348>	THINNER,PAINT,MINERAL SPIRITS FED TT-T-291A,GRADE 1,1 GAL		CN			*	*	*		*		
			8010-242-6318	MS35550-2 <96906>	LACQUER-CELLULOSIC DERIVATIVE TYPE,INSIGNIA BLUE,FULL GLOSS,40 MIN MAX DRY HARD		CN			*	*	*		*		

(1) SOURCE, MAINT AND REC CODE (a) SOURCE CODE	(b) MAINT LEVEL	(c) REC CODE	(2) FEDERAL STOCK NUMBER	REFERENCE NUMBER	(3) DESCRIPTION	MODELS USABLE ON CH-34C	(4) UNIT OF ISSUE	(5) QTY INC IN UNIT PACK	(6) QTY INC IN UNIT	(7) 30-DAY DS/GS MAINT ALW (a) 1-20	(b) 21-50	(c) 51-100	(8) 1-YR ALW PER 100 EQUIP CNTGCY	(9) DEPOT MAINT ALW PER 100 EQUIP	(10) ILLUSTRATION (a) FIG NO	(b) ITEM NO
					CONTINUED TIME,USED AS AN EXTERIOR PROTECTIVE COATING ON PRIMED METAL SURFACES, SUITABLE FOR BRUSHING AS PACKAGED & FOR SPRAYING AFTER THINNING,FED TT-L-32, 1 QT										MSUP	
			8010-243-9767	MS35542-4 <96906>	LACQUER-CELLULOSIC DERIVATIVE TYPE,LIGHT GULL GRAY, LUSTERLESS,40 MIN DRY TIME, BRUSH OR SPRAY APPL,FOR USE ON PRIMED METAL SURFACES AS A CAMOUFLAGE FINISH,FED TT-L-20,1 GAL		CN			*	*	*		*		
			8010-246-6116	<81348>	THINNER,PAINT,MINERAL..... SPIRITS-GENERAL USE INCLUDING BEING USED IN PLACE OF TURPENTINE FOR THINNING OIL PAINTS,302 DEG F TO 410 DEG F DISTILLATION RANGE,LIGHT THINNER,FED TT-T-291,18 GAGE,55 GAL		DR							*		
			8010-246-6443	<81348>	TURPENTINE-GUM SPIRITS OR.... STEAM DISTILLED WOOD,FED TT-T-801,1 GAL,TYPE 1, CLASS A OR B		CN			*	*	*		*		
			8010-246-6445	<81348>	TURPENTINE-GUM SPIRITS OR.... STEAM DISTILLED WOOD TYPE, FED TT-T-801,55 GAL,TYPE 1, CLASS A OR B		DR							*		
			8010-248-2838	MS35550-10 <96906>	LACQUER-CELLULOSIC..... DERIVATIVE,YELLOW,40 MIN DRY TIME,FULL GLOSS, FED TT-L-32,1 QT		CN			*	*	*		*		
			8010-251-6495	MS35550-3 (96906)	LACQUER-CELLULOSIC..... DERIVATIVE,FULL GLOSS, COLORLESS,40 MIN DRY TIME, FED TT-L-32,1 GAL		CN							*		
			8010-251-6503	MS35550-6 <96906>	LACQUER-CELLULOSIC DERIVATIVE TYPE,INSIGNIA RED,FULL GLOSS,USE FOR EXTERIOR PROTECTIVE COATING FOR METAL,FED TT-L-32,1 QT		CN			*	*	*		*		
			8010-257-5377	MS35550-7 <96906>	LACQUER-CELLULOSIC DERIVATIVE TYPE,40 MIN MAX DRY HARD TIME,INSIGNIA WHITE,USED FOR EXTERIOR PROTECTIVE COATING FOR METAL,FED TT-L-32,1 QT		CN			*	*	*		*		
			8010-257-5378	UL11037-1QT <47695>	LACQUER-CELLULOSIC DERIVATIVE TYPE,JET BLACK,USED FOR		CN			*	*	*		*		

(1) SOURCE, MAINT AND REC CODE (a) SOURCE CODE	(b) MAINT LEVEL	(c) REC CODE	(2) FEDERAL STOCK NUMBER	REFERENCE NUMBER	(3) DESCRIPTION	MODELS USABLE ON CH-34C	(4) UNIT OF ISSUE	(5) QTY INC IN UNIT PACK	(6) QTY INC IN UNIT	(7) 30-DAY DS/GS MAINT ALW (a) 1-20	(b) 21-50	(c) 51-100	(8) 1-YR ALW PER 100 EQUIP CNTGCY	(9) DEPOT MAINT ALW PER 100 EQUIP	(10) ILLUSTRATION (a) FIG NO	(b) ITEM NO
					CONTINUED EXTERIOR PROTECTIVE COATING FOR METAL,FED TT-L-32,1 QT										MSUP	
			8010-290-4302	<81349>	VARNISH,OIL-LIQUID FORM,..... MIL-V-6093,1 PT CAN		EA			*	*	*		*		
			8010-290-6158	(81348)	LACQUER-CELLULOSIC DERIVATIVE OR VINYL RESIN TYPE,10 MIN MAX DRY TO TOUCH TIME,1 HR MAX DRY HARD TIME,BLACK, FULL GLOSS,FOR USE ON THE ALUMINUM SURFACES OF ACFT IN PROXIMITY OF STORAGE BATTERIES,SUFFICIENTLY RESISTANT TO ACID,GASOLINE & ENGINE OIL TO PROTECT METAL AGAINST SPILLAGE & LEAKS,FED TT-L-54,1 GAL		CN			*	*	*		*		
			8010-297-0574	<81349>	DOPE-CELLULOSE NITRATE,..... CLEAR,MIL-D-5553A,1 PT		CN			*	*	*		*		
			8010-297-0593	1319 <87187>	PRIMER COATING-YELLOW,5 MIN.. MAX DRY HARD TIME,FOR USE AS A CORROSION-INHIBITING PRIMER ON AIRCRAFT METAL SURFACES EITHER ALONE OR TOPCOATED WITH LACQUER OR ENAMEL,INTENDED FOR SPRAY APPLICATION <MAY BE DIPPED OR BRUSH APPLIED> OVER BARE METAL OR SURFACES PRETREATMENT-COATED IN ACCORDANCE WITH SPEC MIL-C-8514 OR MIL-C-15328, MIL-P-8585,16 OZ AEROSOL		CN			*	*	*		*		
			8010-297-2091	MS35522-1 <96906>	ENAMEL-FULL GLOSS,BLUE,COLOR. NO.15044,MIL-E-7729,TYPE 1,1 QT		CN			*	*	*		*		
			8010-297-2092	MS35522-2 <96906>	ENAMEL-GRAY,FULL GLOSS,..... SPRAY OR BRUSH APPL,9 HR DRY TIME,FOR EXTERIOR OR INTERIOR ACFT & GROUND EQUIPMENT,MIL-E-7729, TYPE 1,1 PT		CN			*	*	*		*		
			8010-297-2094	MS35522-5 <96906>	ENAMEL-RED,FULL GLOSS,8 HR... DRY TIME,FOR INTERIOR OR EXTERIOR USE ON AIRCRAFT PARTS & RELATED EQUIPMENT, SUITABLE FOR BRUSHING AS PACKAGED & FOR SPRAYING AFTER THINNING,MIL-E-7729, TYPE 1,1 QT		CN			*	*	*		*		
			8010-297-2095	MS35522-6 <96906>	ENAMEL-WHITE,COLOR NO..... 17875,FULL GLOSS,ALKYD		CN			*	*	*		*		

(1) SOURCE, MAINT AND REC CODE (a) SOURCE CODE	(b) MAINT LEVEL	(c) REC CODE	(2) FEDERAL STOCK NUMBER	REFERENCE NUMBER	(3) DESCRIPTION	MODELS USABLE ON CH-34C	(4) UNIT OF ISSUE	(5) QTY INC IN UNIT PACK	(6) QTY INC IN UNIT	(7) 30-DAY DS/GS MAINT ALW (a) 1-20	(b) 21-50	(c) 51-100	(8) 1-YR ALW PER 100 EQUIP CNTGCY	(9) DEPOT MAINT ALW PER 100 EQUIP	(10) ILLUSTRATION (a) FIG NO	(b) ITEM NO
					CONTINUED										MSUP	
					RESIN,MIL-E-7729,1 QT											
			8010-515-0800	MS35727-21 <96906>	ENAMEL-LUSTERLESS,LIGHT..... GULL GRAY,45 MIN DRY TO TOUCH TIME,8 HR DRY HARD TIME,FOR USE ON METAL PARTS & SURFACES OVER ZINC CHROMATE PRIMER AS A CAMOUFLAGE FINISH, MIL-E-5556,1 GAL		CN							*		
			8010-515-1598	(81348)	LACQUER-CELLULOSIC..... DERIVATIVE,GRAY,FULL GLOSS, 40 MIN DRY TIME, FED TT-L-32,1/2 PT		CN			*	*	*		*		
			8010-515-2208	2-00008-488 <03848>	PRIMER COATING-YELLOW,5 MIN.. MAX DRY HARD TIME,FOR USE AS A CORROSION-INHIBITING PRIMER ON AIRCRAFT METAL SURFACES EITHER ALONE OR TOPCOATED W/LACQUER OR ENAMEL,INTENDED FOR SPRAY APPL <MAY BE DIPPED OR BRUSH APPLIED> OVER BARE METAL OR SURFACES PRETREATMENT-COATED IN ACCORDANCE WITH SPEC MIL-C-8514 OR MIL-C-15328, MIL-P-8585,1 GAL		CN			*	*	*		*		
			8010-515-2258	<81349>	REMOVER,PAINT-ORGANIC..... SOLVENT,LIQUID,FOR USE IN STRIPPING LACQUERS & ENAMEL COATINGS FROM METAL, MIL-R-8633,5 GAL		PL			*	*	*		*		
			8010-558-7026	<81348>	THINNER,PAINT,MINERAL SPIRITS LIGHT THINNER,302 DEG F TO 410 DEG F DISTILLATION RANGE,INTENDED FOR GENERAL USE IN THINNING PAINT & MAY BE USED IN PLACE OF TURPENTINE FOR THINNING OIL PAINTS,W/FLEXIBLE OR PUSH-PULL SPOUT,FED TT-T-291,GRADE 1,5 GAL		PL			*	*	*		*		
			8010-597-7842	<81349>	ENAMEL-LUSTERLESS,YELLOW..... COLOR NO.3305,MIL-E-5556, 1 GAL		CN			*	*	*		*		
			8010-597-7843	<81349>	ENAMEL-LUSTERLESS,GREEN..... COLOR NO.3412,MIL-E-5556, 1 GAL		CN			*	*	*		*		
			8010-597-7856	MS35637-1 <96906>	VARNISH,OIL-PHENOLIC RESIN... TYPE,1 HR MIN DRY TO TOUCH TIME,8 HR MAX DRY HARD		CN			*	*	*		*		

(1) SOURCE, MAINT AND REC CODE (a) SOURCE CODE	(b) MAINT LEVEL	(c) REC CODE	(2) FEDERAL STOCK NUMBER	REFERENCE NUMBER		(3) DESCRIPTION	MODELS USABLE ON CH-34C	(4) UNIT OF ISSUE	(5) QTY INC IN UNIT PACK	(6) QTY INC IN UNIT	(7) 30-DAY DS/GS MAINT ALW (a) 1-20	(b) 21-50	(c) 51-100	(8) 1-YR ALW PER 100 EQUIP CNTGCY	(9) DEPOT MAINT ALW PER 100 EQUIP	(10) ILLUSTRATION (a) FIG NO	(b) ITEM NO
						CONTINUED TIME,80 DEG F MIN FLASH POINT,USED AS A TRANSPARENT & ALUMINIZED EXTERIOR PROTECTIVE FINISH COATING FOR WOOD,METAL & DOPED FABRIC,ALSO SERVES AS AN ALUMINUM VEHICLE FOR CERTAIN ENAMELS & PRIMERS & AS A SEALING COMPOUND IN THE FABRICATION & REPAIR OF RIVETED ALUMINUM ALLOY TANKS,KAURI REDUCTION,120% MIN,FED TT-V-119,1 GAL											MSUP	
			8010-598-2634		<81349>	ENAMEL-FULL GLOSS,GRAY,..... COLOR NO.16473,MIL-E-7729, 1 QT		CN			*	*	*		*		
			8010-598-4718	EC1184	<76381>	FILLER,DENT,METAL SURFACE.... ALUMINUM COLOR,CAN BE USED FOR REPAIRING METAL CASTINGS,WHEN HARD MAY BE MACHINED,DRILLED,TAPPED,OR GROUND WITHOUT CRACKING, CRUMBLING OR LOSS OF ADHESION,MIL-F-52252,1 QT CAN		QT			*	*	*		*		
			8010-598-5057	MS35522-4	<96906>	ENAMEL-AIR DRYING,45 MIN..... MAX DRY TO TOUCH TIME,BRUSH OR SPRAY APPL,YELLOW, ORANGE,FULL GLOSS,FOR INTERIOR & EXTERIOR USE, CHARACTERIZED BY GOOD COLOR,HIGH GLOSS & RESISTANCE TO WEATHER, MIL-E-7729,TYPE 1,1 QT		CN			*	*	*		*		
			8010-598-5946		<81349>	ENAMEL-AIR DRYING,45 MIN MAX. DRY TO TOUCH TIME,BRUSH OR SPRAY APPL,JET BLACK,FULL GLOSS,FOR INTERIOR & EXTERIOR USE,CHARACTERIZED BY GOOD COLOR,HIGH GLOSS & RESISTANCE TO WEATHER, MIL-E-7729,TYPE 1,1 QT		CN			*	*	*		*		
			8010-616-4009		<81349>	PAINT,HEAT RESISTING-1400.... DEG F TEMP RATING,OLIVE DRAB,MIL-P-14105,1 GAL		CN			*	*	*		*		
			8010-616-9143		<81349>	ENAMEL-BLACK,LUSTERLESS,..... ALKYD RESIN SOLUTION,8 HR DRY TIME,MIL-E-5556,1 PT		CN			*	*	*		*		
			8010-664-6155		<81348>	LACQUER-CELLULOSIC DERIVATIVE TYPE,OLIVE DRAB,LUSTERLESS, FOR USE ON PRIMED METAL		CN			*	*	*		*		

(1) SOURCE, MAINT AND REC CODE (a) SOURCE CODE	(b) MAINT LEVEL	(c) REC CODE	(2) FEDERAL STOCK NUMBER	REFERENCE NUMBER	(3) DESCRIPTION	MODELS USABLE ON CH-34C	(4) UNIT OF ISSUE	(5) QTY INC IN UNIT PACK	(6) QTY INC IN UNIT	(7) 30 DAY DS/GS MAINT ALW (a) 1-20	(b) 21-50	(c) 51-100	(8) 1 YR ALW PER 100 EQUIP CNTGCY	(9) DEPOT MAINT ALW PER 100 EQUIP	(10) ILLUSTRATION (a) FIG NO	(b) ITEM NO
					CONTINUED										MSUP	
					SURFACES AS A CAMOUFLAGE FINISH,FED TT-L-20,1 GAL											
			8010-664-8263	<81349>	ENAMEL,HEAT RESISTING-GLOSS.. BLACK,4 HR DRY TO TOUCH TIME,18 HR DRY HARD TIME, FOR USE AS AN EXTERIOR PROTECTIVE COATING FOR ACFT ENGINE CYLINDERS OR OTHER PARTS WHICH ARE SUBJECTED TO ELEVATED TEMP, MIL-F-5557,TYPE 1,1 QT		CN			*	*	*		*		
			8010-687-3636	<81349>	ENAMEL-45 MIN MAX DRY TO..... TOUCH TIME,8 HR DRY HARD TIME,JET BLACK,LUSTERLESS, FOR USE ON METAL PARTS & SURFACES OVER ZINC CHROMATE PRIMER AS A CAMOUFLAGE FINISH,MIL-E-5556,1 QT		CN			*	*	*		*		
			8010-687-4019	<81348>	PIGMENT,ALUMINUM-EXTRA FINE.. LINING,PASTE FORM,USED ON AIRPLANES,RAILROAD COACHES, MOTOR VEHICLES,FOR SIGN PAINTING & DECORATING AND WHERE A VERY SMOOTH FINISH IS NECESSARY OR WHERE IT IS DESIRED TO REDUCE THE AMOUNT OF ALUMINUM USED, FED TT-P-320,TYPE 2,CLASS A,1 LB		CN			*	*	*		*		
			8010-687-4386	<81349>	COATING COMPOUND,FLUORESCENT. RED-ORANGE,LIQUID FORM,FOR DIRECT APPL,MIL-P-21600,TWO 1 GAL PAILS COATING COMPOUND & ONE 1 GAL PAIL CLEAR COATING COMPOUND		KT			*	*	*		*		
			8010-835-2114	<81349>	PRIMER COATING-YELLOW PRIMER, 5 MIN DRY HARD TIME,FOR USE AS A CORROSION-INHIBITING PRIMER ON ACFT METAL SURFACES EITHER ALONE OR TOPCOATED W/LACQUER OR ENAMEL,MIL-P-8585,1 PT CAN		PT			*	*	*		*		
			8010-899-0931	<81349>	PRIMER COATING-PRETINTED TO.. MATCH INTERIOR GREEN COLOR NO.34151 OF FED STD 595, 5 MIN DRY TIME,FOR USE AS A CORROSION-INHIBITING PRIMER ON AIRCRAFT METAL SURFACES EITHER ALONE OR TOPCOATED WITH LACQUER OR ENAMEL,MIL-P-8585,1 QT		CN			*	*	*		*		

(1) SOURCE, MAINT AND REC CODE (a) SOURCE CODE	(b) MAINT LEVEL	(c) REC CODE	(2) FEDERAL STOCK NUMBER	REFERENCE NUMBER		(3) DESCRIPTION	MODELS USABLE ON CH-34C	(4) UNIT OF ISSUE	(5) QTY INC IN UNIT PACK	(6) QTY INC IN UNIT	(7) 30-DAY DS/GS MAINT ALW (a) 1-20	(b) 21-50	(c) 51-100	(8) 1-YR ALW PER 100 EQUIP CNTGCY	(9) DEPOT MAINT ALW PER 100 EQUIP	(10) ILLUSTRATION (a) FIG NO	(b) ITEM NO
			8010-899-8825		<81349>	PRIMER COATING-PRETINTED TO.. MATCH INTERIOR GREEN COLOR NO.34151 OF FED STD 595,5 MIN DRY HARD TIME,FOR USE AS A CORROSION-INHIBITING PRIMER ON AIRCRAFT METAL SURFACES EITHER ALONE OR TOPCOATED WITH LACQUER OR ENAMEL,MIL-P-8585,16 OZ AEROSOL		CN			*	*	*		*	MSUP	
			8010-913-8743		<81349>	LACQUER-ACRYLIC..... NITROCELLULOSE TYPE,OLIVE DRAB,LUSTERLESS,PRIMARILY INTENDED FOR SPRAY APPL, MIL-L-19538,1 GAL		CN			*	*	*		*		
			8010-930-7258	0465	<04347>	DENT FILLER-C/O 2 LB OF..... RESIN IN QT CAN,1.15 LB OF CATALYST IN PT CAN		PG			*	*	*		*		
			8010-941-8712		<81349>	LACQUER-ACRYLIC..... NITROCELLULOSE TYPE,OLIVE DRAB,LUSTERLESS, MIL-L-19538,16 OZ AEROSOL		CN			*	*	*		*		
			8010-943-7126		<81349>	REMOVER,PAINT-ORGANIC..... SOLVENT,LIQUID FORM, FLAMMABLE,MIL-R-25134,5 GAL		PL			*	*	*		*		
			8010-983-8094		<81349>	ENAMEL-LUSTERLESS,OLIVE..... DRAB,MIL-E-5556,1 QT		CN			*	*	*		*		
			8010-985-0751		<81348>	LACQUER-CELLULOSIC..... DERIVATIVE TYPE,OLIVE DRAB, FULL GLOSS,FOR USE AS AN EXTERIOR PROTECTIVE COATING FOR PRIMED METAL SURFACES, NOT TO BE USED OVER BARE METAL,FED TT-L-32,1 QT		CN			*	*	*		*		
			8010-995-3054		<81349>	ENAMEL-OLIVE DRAB,NO..... X14087,FULL GLOSS,ALKYD RESIN SOLUTION DRIERS, MIL-E-7729,TYPE 1,1 QT		CN			*	*	*		*		
			8030-082-2425		<81349>	COATING COMPOUND,METAL..... PRETREATMENT, RESIN-ACID-POLYVINYL BUTYRAL RESIN & PHOSPHORIC ACID,W/PIGMENTS & THINNERS USED AS A TREATMENT ON ACFT METALS PRIOR TO THE APPL OF ANY PRIMER,NOT INTENDED AS A PERMANENT PROTECTIVE COATING,BRUSH,ROLLER OR SWAB APPL,FORMULATED FOR USE UNDER LOW RELATIVE HUMIDITY CONDITIONS & WHERE MAX REFLECTANCE IS		KT			*	*	*		*		

(1) SOURCE, MAINT AND REC CODE (a) SOURCE CODE	(b) MAINT CATEGORY	(c) REC CODE	(2) FEDERAL STOCK NUMBER	REFERENCE NUMBER		(3) DESCRIPTION	MODELS USABLE ON CH-34C	(4) UNIT OF ISSUE	(5) QTY INC IN UNIT PACK	(6) QTY INC IN UNIT	(7) 30-DAY DS/GS MAINT ALW (a) 1-20	(b) 21 50	(c) 51 100	(8) 1-YR ALW PER 100 EQUIP CNTGCY	(9) DEPOT MAINT ALW PER 100 EQUIP	(10) ILLUSTRATION (a) FIG NO	(b) ITEM NO
						CONTINUED MANDATORY,MIL-C-8514,4 GAL PAIL OF RESIN W/1 GAL PLASTIC BOTTLE OF ACID										MSUP	
			8030-087-8630		<81349>	ANTISEIZE COMPOUND-GRAPHITE.. PETROLATUM,MIL-T-5544,1 LB		CN			*	*	*		*		
			8030-209-8005		<81348>	ANTISEIZE COMPOUND-WHITE LEAD BASE W/ASPHALT,GRAPHITE, LUBRICATING OIL & PETROLATUM,350 DEG F MAX TEMP RATING,FOR PRESSURE UP TO 150 PSI,GENERAL PURPOSE USE FOR THD FITTINGS ON STEAM & WATER APPL,FED TT-A-580,1/2 PT		CN			*	*	*		*		
			8030-231-2353		<81349>	CORROSION PREVENTIVE..... COMPOUND-PETROLEUM BASE,HOT APPL,MIL-C-1196A,GRADE 3,5 LB		CN			*	*	*		*		
			8030-231-2354		<81349>	CORROSION PREVENTIVE..... COMPOUND-PETROLATUM BASE, FOR HOT APPL,MIL-C-11796A,5 LB		CN			*	*	*		*		
			8030-242-3193		<81349>	SEALING COMPOUND-SEMISOLID,.. 3 HR APPL TIME,MIL-S-7126, TYPE 1,1 PT		CN			*	*	*		*		
			8030-244-1298		<81349>	CORROSION PREVENTIVE..... COMPOUND-SOFT FILM,FOR COLD APPL,MIL-C-16173,GRADE 2,5 GAL PAIL		CN			*	*	*		*		
			8030-252-3391	1756371	<80064>	SEALING COMPOUND-PASTE FORM,. PLIABLE,GREASE,HYDROCARBON, OIL & WATER RESISTANT,8 OZ		TU			*	*	*		*		
			8030-262-9045	EC750	<76381>	SEALING COMPOUND-SYNTHETIC... RUBBER,LIQUID,BROWN,WATER, OIL,& FUEL RESISTANT,FLASH POINT 25 DEG F,1 PT CAN		PT			*	*	*		*		
			8030-275-8117	EC801	<76381>	SEALING COMPOUND-W/SEPARATE.. CATALYST,SEMISOLID,APPLIED BY EXTRUSION GUN OR SPATULA,3 HR RATED APPL TIME,3 HR MIN TO 72 HR MAX DRY TIME,TACK FREE,BLACK, 1-1/2 PT OF BASE COMPOUND IN A 1 QT CAN W/REQUIRED AMOUNT OF CATALYST, MIL-S-7124		KT			*	*	*		*		
			8030-281-2339		<81349>	SEALING COMPOUND-SYNTHETIC... RUBBER,W/SEPARATE CATALYST, SEMISOLID,2 HR APPL TIME,24 HR DRYING TIME,TACK FREE, MIL-S-7502,CLASS B-2,1 PT		KT			*	*	*		*		

(1) SOURCE, MAINT AND REC CODE (a) SOURCE CODE	(b) MAINT LEVEL	(c) REC CODE	(2) FEDERAL STOCK NUMBER	REFERENCE NUMBER	(3) DESCRIPTION	MODELS USABLE ON CH-34C	(4) UNIT OF ISSUE	(5) QTY INC IN UNIT PACK	(6) QTY INC IN UNIT	(7) 30-DAY DS/GS MAINT ALW (a) 1-20	(b) 21-50	(c) 51-100	(8) 1-YR ALW PER 100 EQUIP CNTGCY	(9) DEPOT MAINT ALW PER 100 EQUIP	(10) ILLUSTRATION (a) FIG NO	(b) ITEM NO
					CONTINUED CAN BASE W/REQUIRED AMOUNT CATALYST										MSUP	
			8030-285-1570	9007316 <18876>	CORROSION PREVENTIVE..... COMPOUND-PETROLATUM BASE, SOFT FILM,135 DEG F MAX RATED MELTING POINT,200 TO 325 TENTH OF MM UNWORKED PENETRATION RATING,HOT APPLICATION BY BRUSH, DIPPING OR SWAB,USED FOR PRESERVATION OF ANTI-FRICTION BEARINGS, MIL-C-11796,CLASS 3,35 LB		PL			*	*	*		*		
			8030-514-0981	473 <76381>	TAPE,PRESSURE SENSITIVE..... ADHESIVE-PLASTIC BACKING, CLEAR,TRANSPARENT,OIL & WATER RESISTANT,1 IN.W,36 YD LG,1 IN.CORE ID		RL			*	*	*		*		
			8030-515-0319	<81349>	TAPE,PRESSURE SENSITIVE..... ADHESIVE-GLASS CLOTH BACKING,OPAQUE,CORROSION RESISTANT,NATURAL COLOR,1 IN.W,3 IN.ID CORE,FOR BINDING JOINTS IN LOW PRESSURE HOT AIR DUCTS WHERE THE TEMPERATURE DOES NOT EXCEED 350 DEG F, MIL-T-4053,60 YD		RL			*	*	*		*		
			8030-559-6131	<81349>	SEALING COMPOUND-SYNTHETIC... RUBBER,W/SEPARATE CATALYST, LIQUID,APPLIED BY BRUSH,2 HR RATED APPL TIME,24 HR DRYING TIME,MIL-S-7502 CLASS A-2,1 QT CAN		KT			*	*	*		*		
			8030-613-3131	<81349>	CORROSION RESISTANT PRIMER,.. 4 OZ,PLASTIC BOTTLE,ALODINE 1200,MIL-C-5541		JR			*	*	*		*		
			8030-656-1426	FORMAGASKET3X1PT <77247>	SEALING COMPOUND-RESIN BASE,. BRUSH APPL,LIQUID FORM, NONHARDENING,FOR SEALING THD & GASKETS WHEN RES TO ENGINE OILS,FUEL & WATER IS REQUIRED,MIL-S-45180, TYPE 3,1 PT		CN			*	*	*		*		
			8030-664-4968	<81349>	PUTTY-USED AS A GENERAL..... PURPOSE SEALER FOR CRACKS, SMALL VOIDS,PIN HOLES & SEAMS WHERE A CORROSION INHIBITING TYPE MATERIAL IS REQUIRED,NOT TO BE USED AS A FUEL TANK OR PRESSURE		CN			*	*	*		*		

(1) SOURCE, MAINT AND REC CODE (a) SOURCE CODE	(b) MAINT LEVEL	(c) REC CODE	(2) FEDERAL STOCK NUMBER	REFERENCE NUMBER	(3) DESCRIPTION	MODELS USABLE ON CH-34C	(4) UNIT OF ISSUE	(5) QTY INC IN UNIT PACK	(6) QTY INC IN UNIT	(7) 30-DAY DS/GS MAINT ALW (a) 1-20	(b) 21-50	(c) 51-100	(8) 1-YR ALW PER 100 EQUIP CNTGCY	(9) DEPOT MAINT ALW PER 100 EQUIP	(10) ILLUSTRATION (a) FIG NO	(b) ITEM NO
					CONTINUED CABIN SEALANT,MIL-P-8116, 10 LB										MSUP	
			8030-754-2408	425 <76381>	TAPE,PRESSURE SENSITIVE..... ADHESIVE-ALUMINUM FOIL BACKING,OPAQUE,ALUMINUM COLOR,1/4 IN.W,1 IN.CORE ID,60 YD LG,USED FOR SEALING & MASKING,FED L-T-80		RL			*	*	*		*		
			8030-811-3723	<81349>	CORROSION RESISTANT COATING,. CHEMICALLY TREATED ALUMINUM FOR USE AS A PAINT BASE & AS A CORROSIVE PREVENTIVE FILM FOR ALUMINUM & ALUMINUM ALLOYS,ALL GREASE, OIL,OXIDE FILM,PAINT, WELDING FLUX OR OTHER INJURIOUS FOREIGN MATTER SHALL BE REMOVED FROM THE PARTS BEFORE APPLICATION OF THE CHEMICAL FILM, MIL-C-5541,2 LB		CN			*	*	*		*		
			8030-829-0376	ALODINEKITN012 <84063>	COATING KIT,ALUMINUM..... CORROSION RESISTING-TWO 1/4 LB JARS OF ALODINE NO.1200, TWO 1/2 PT BOTTLES OF ALODINE TONER NO.1200,TWO 1 QT BOTTLES OF DEOXIDINE NO.22/KT,BRUSH APPLICATION		EA			*	*	*		*		
			8030-965-2437	<81349>	SEALING COMPOUND-EXTRUDED.... TAPE,SEMISOLID FORM,FOR USE AS A SEALANT FOR SYNTHETIC GLASS,1 IN.W,MIL-S-7126, TYPE 2,90 FT		RL			*	*	*		*		
			8040-165-8614	S9075-3 <91547>	ADHESIVE-NON-TOXIC,LIQUID.... FORM,USED FOR BONDING VULCANIZED SYNTHETIC RUBBER MATERIAL SUCH AS GASKETS, MATTING & SIMILIAR ITEMS TO METAL & TO VULCANIZED RUBBER,MIL-A-1154,1 QT		CN			*	*	*		*		
			8040-200-3794	EPON828 <86961>	ADHESIVE-SYNTHETIC RESIN..... BASE,W/SEPARATE CATALYST, NORMAL MECHANICAL PROPERTIES,DIELECTRIC CONSTANT <LAMINATE> OF 4.2 UP TO 4.4,LIQUID FORM, USED FOR LOW PRESSURE LAMINATING IN FABRICATING PLASTIC LAMINATES FOR STRUCTURAL PARTS,ACFT		KT			*	*	*		*		

(1) SOURCE, MAINT AND REC CODE (a) SOURCE CODE	(b) MAINT LEVEL	(c) REC CODE	(2) FEDERAL STOCK NUMBER	REFERENCE NUMBER	(3) DESCRIPTION	MODELS USABLE ON CH-34C	(4) UNIT OF ISSUE	(5) QTY INC IN UNIT PACK	(6) QTY INC IN UNIT	(7) 30-DAY DS GS MAINT ALW (a) 1-20	(b) 21-50	(c) 51-100	(8) 1-YR ALW PER 100 EQUIP CNTGCY	(9) DEPOT MAINT ALW PER 100 EQUIP	(10) ILLUSTRATION (a) FIG NO	(b) ITEM NO
					CONTINUED RADIO,ANTENNA HOUSINGS & OTHER APPL,MIL-R-7575, GRADE A,CLASS 3,1 QT CAN BASE,W/CATALYST,BX										MSUP	
			8040-200-4390	EPON6 <86961>	ADHESIVE-LIQUID,FOR..... CEMENTING METAL TO METAL, 1 GAL CAN		KT			*	*	*		*		
			8040-221-3806	(81349)	ADHESIVE-LIQUID FORM,..... MIL-C-4003,1 QT CAN		QT			*	*	*		*		
			8040-281-1974	<81349>	ADHESIVE-SYNTHETIC RESIN..... BASE,W/SEPARATE CATALYST, LIQUID FORM,ROOM TEMP SETTING,6 MONTHS STORAGE LIFE,5 HR CURING TIME,USED FOR HIGH STRENGTH BONDING OF WOOD & PLASTIC, MIL-A-46051,TYPE 1,GRADE B, 1 PT CAN BASE,W/CATALYST		KT			*	*	*		*		
			8040-809-8252	EC776 <76381>	ADHESIVE-RUBBER,SYNTHETIC,... LIQUID FORM,FOR BONDING SYNTHETIC RUBBER TO METAL, ALSO AS A PRIMER FOR OTHER ADHESIVES,2 OZ		TU			*	*	*		*		
			8105-880-4353	<81349>	BAG,AIRSICKNESS-MIL-B-25338A.		EA			*	*	*		*		
			8135-634-2946	471-1INCH <76381>	TAPE,PRESSURE SENSITIVE..... ADHESIVE-VINYL ACETATE SHEET BACKING,OPAQUE,BLACK, 1 IN.W,3 IN.CORE ID,FED PPP-T-0066,TYPE 1,36 YD		RL			*	*	*		*		
			8135-663-0196	<81348>	TAPE,PRESSURE SENSITIVE..... ADHESIVE-OPAQUE,OLIVE DRAB, 2 IN.W,3 IN.CORE ID,FED PPP-T-60,CLASS 1,60 YD		RL			*	*	*		*		
			8330-823-7545	<81348>	CHAMOIS LEATHER ASSORTMENT,.. SHEEPSKIN-5 SKIN-SHAPED PIECES PER PKG, EDGE-TRIMMED,OIL-TANNED, SUEDE FINISH ON BOTH SIDES, FED KK-C-300,GRADE B, CLASS 2,SIZE S,M & L		PG			*	*	*		*		
			8520-231-3006	<81348>	SOAP,TOILET-NONMEDICATED,.... DESIGNED FOR USE IN FRESH WATER,CAKE FORM,FLOATING TYPE,6 OZ,FED P-S-620,TYPE 1,SIZE 3,100 CAKES PER CASE		CK			*	*	*		*		
			9150-082-2449	<81349>	LUBRICATING OIL,AIRCRAFT..... PISTON ENGINE-CORROSION RESISTANT,26.1 CENTISTOKES AT 210 DEG F MAX VISCOSITY, 0 DEG F MAX POUR POINT, 470 DEG F MIN FLASH POINT		DR			*	*	*		*		

(1) SOURCE, MAINT AND REC CODE (a) SOURCE CODE	(b) MAINT LEVEL	(c) REC CODE	(2) FEDERAL STOCK NUMBER	REFERENCE NUMBER	(3) DESCRIPTION	MODELS USABLE ON CH-34C	(4) UNIT OF ISSUE	(5) QTY INC IN UNIT PACK	(6) QTY INC IN UNIT	(7) 30-DAY DS/GS MAINT ALW (a) 1-20	(b) 21-50	(c) 51-100	(8) 1-YR ALW PER 100 EQUIP CNTGCY	(9) DEPOT MAINT ALW PER 100 EQUIP	(10) ILLUSTRATION (a) FIG NO	(b) ITEM NO
					CONTINUED BY CLEVELAND OPEN-CUP TEST METHOD,MIL-L-22851,TYPE 2, 55 GAL,16 GAGE										MSUP	
			9150-223-4003	<81349>	GREASE,AIRCRAFT-PETROLEUM,... OIL AND GELLING AGENT, OXIDATION AND WATER RESISTANT,MIL-L-3545,1 LB CAN		LB			*	*	*		*		
			9150-223-4130	<81349>	LUBRICATING OIL,GEAR..... EXTREME PRESSURE TYPE, ANTIFOAM;CORROSION RESISTANT,MIL-L-6086A,1 GAL CAN		GL			*	*	*		*		
			9150-223-4134	<81349>	HYDRAULIC FLUID,PETROLEUM.... BASE-ANTIWEAR,CORROSION & OXIDATION RESISTANT,RED,500 CENTISTOKES AT MINUS 40 DEG F MAX VISCOSITY,10 CENTISTOKES AT 130 DEG F MIN VISCOSITY,200 DEG F MIN FLASH POINT BY CLEVELAND OPEN-CUP TEST METHOD,MINUS 75 DEG F MAX POUR POINT, DESIGNED FOR SYNTHETIC RUBBER SEAL,USED IN RECOIL MECHANISMS,MIL-H-5606, 1 GAL CAN		GL			*	*	*		*		
			9150-250-0926	14P1 <82146>	PETROLATUM,TECHNICAL-115 TO.. 140 DEG F MELTING POINT RANGE,150 TO 275 PENETRATION AT 77 DEG F, 390 DEG F MIN FLASH POINT, OPEN-CUP TEST METHOD,FED VV-P-236,1 LB CAN		LB			*	*	*		*		
			9150-252-6383	WS491 <80738>	HYDRAULIC FLUID,PETROLEUM.... BASE-ANTIWEAR,CORROSION & OXIDATION RESISTANT,RED, 500 CENTISTOKES AT MINUS 40 DEG F MAX VISCOSITY,10 CENTISTOKES AT 130 DEG F MIN VISCOSITY,200 DEG F MIN FLASH POINT BY CLEVELAND OPEN-CUP TEST METHOD,MINUS 75 DEG F MAX POUR POINT, MIL-H-5606,1 QT CAN		QT			*	*	*		*		
			9150-257-5360	<81349>	GREASE,PLUG VALVE-GLYCEROL... SOAP W/VEGETABLE & OR SYNTHETIC OILS,77 DEG F,260 DEG F MIN DROPPING POINT, MIL-G-6032,1 LB CAN		LB			*	*	*		*		
			9150-263-3490	731 <81339>	LUBRICATING OIL,GENERAL.....		QT			*	*	*		*		

(1) SOURCE, MAINT AND REC CODE (a) SOURCE CODE	(b) MAINT LEVEL	(c) REC CODE	(2) FEDERAL STOCK NUMBER	REFERENCE NUMBER	(3) DESCRIPTION	MODELS USABLE ON CH-34C	(4) UNIT OF ISSUE	(5) QTY INC IN UNIT PACK	(6) QTY INC IN UNIT	(7) 30-DAY DS/GS MAINT ALW (a) 1-20	(b) 21-50	(c) 51-100	(8) 1-YR ALW PER 100 EQUIP CNTGCY	(9) DEPOT MAINT ALW PER 100 EQUIP	(10) ILLUSTRATION (a) FIG NO	(b) ITEM NO
					CONTINUED PURPOSE-CORROSION & OXIDATION RESISTANT,4000 CENTISTOKES AT 40 DEG F MAX VISCOSITY,10 CENTISTOKES AT 100 DEG F MIN VISCOSITY, MINUS 70 DEG F MAX POUR POINT,265 DEG F MIN FLASH POINT BY CLEVELAND OPEN-CUP TEST METHOD,MIL-L-7870,1 QT CAN										MSUP	
			9150-265-9413	<81349>	HYDRAULIC FLUID,PETROLEUM.... BASE-MIL-H-6083,TYPE 1,1 QT CAN		QT			*	*	*		*		
			9150-265-9436	<81349>	LUBRICATING OIL,INTERNAL..... COMBUSTION ENGINE-ANTIFOAM, CORROSION & OXIDATION RESISTANT,390 DEG F MIN FLASH POINT,MIL-L-2104A,16 GAGE,55 GAL		DR			*	*	*		*		
			9150-269-8374	<81349>	GREASE,AIRCRAFT-MINERAL..... AND/OR SYNTHETIC OIL & A GELLING AGENT,265 TO 340 WORKED PENETRATION AT 77 DEG F,300 DEG F MIN DROPPING POINT,MINUS 40 TO PLUS 250 DEG F EFFICIENT TEMP RANGE,CORROSION, OXIDATION & WATER RESISTANT,USED IN ANTIFRICTION BEARINGS,GEAR BOXES & PLAIN BEARINGS WHERE BOTH LOW & HIGH TEMPERATURES MAY BE REQUIRED,MIL-G-7711,35 LB		PL			*	*	*		*		
			9150-273-2397	<81349>	LUBRICATING OIL,GENERAL..... PURPOSE-CORROSION & OXIDATION RESISTANT,MINUS 70 DEG F MAX POUR POINT,265 DEG F MIN FLASH POINT, MIL-L-7870A,1 GAL CAN		GL			*	*	*		*		
			9150-577-5841	<81349>	LUBRICATING OIL,GEAR..... UNIVERSAL TYPE,ANTIFOAM, CORROSION RESISTANT,EXTREME PRESSURE,10850 CENTISTOKES AT 0 DEG F MAX VISCOSITY, 8.8 TO 11.6 CENTISTOKES AT 210 DEG F MIN VISCOSITY,325 DEG F MIN FLASH POINT BY CLEVELAND OPEN-CUP TEST METHOD,FOR LUBRICATION OF AUTOMOTIVE GEAR UNITS,		PL			*	*	*		*		

(1) SOURCE, MAINT AND REC CODE (a) SOURCE CODE	(b) MAINT LEVEL	(c) REC CODE	(2) FEDERAL STOCK NUMBER	REFERENCE NUMBER	(3) DESCRIPTION	MODELS USABLE ON CH-34C	(4) UNIT OF ISSUE	(5) QTY INC IN UNIT PACK	(6) QTY INC IN UNIT	(7) 30-DAY DS/GS MAINT ALW (a) 1-20	(b) 21-50	(c) 51-100	(8) 1-YR ALW PER 100 EQUIP CNTGCY	(9) DEPOT MAINT ALW PER 100 EQUIP	(10) ILLUSTRATION (a) FIG NO	(b) ITEM NO
					CONTINUED HEAVY-DUTY INDUSTRIAL-TYPE ENCLOSED GEAR UNITS, STEERING GEARS & FLUID-LUBRICATED UNIVERSAL JOINTS OF AUTOMATIC EQUIPMENT, FOR GENERAL USE BELOW 0 DEG F, MIL-L-2105, GRADE 80, 5 GAL										MSUP	
			9150-616-9020	<81349>	GREASE, AIRCRAFT-CORROSION.... & WATER RESISTANT, MINUS 65 DEG F TO PLUS 160 DEG F EFFICIENT TEMP RANGE, MIL-G-25537, 1 LB CAN		LB			*	*	*		*		
			9150-754-2595	<81349>	GREASE, MOLYBDENUM DISULFIDE.. 260 TO 310 WORKED PENETRATION AT 77 DEG F, 325 DEG F MIN DROPPING POINT, 250 DEG F MAX OPERATING TEMP, LOW EVAPORATION, CORROSION, OXIDATION, & WATER RESISTANT, MIL-G-21164, 1 LB CAN		LB			*	*	*		*		
			9150-782-2627	<81349>	LUBRICATING OIL, AIRCRAFT..... TURBINE ENGINE, SYNTHETIC ANTIFOAM, CORROSION & OXIDATING RESISTANT, 3.0 CENTISTOKES AT 210 DEG F MIN VISCOSITY, 11.0 CENTISTOKES AT 100 DEG F MIN VISCOSITY, MINUS 75 DEG F MAX POUR POINT, 400 DEG F MIN FLASH POINT, MIL-L-007808, 1 QT CAN		QT			*	*	*		*		
			9150-965-2305	<81349>	LUBRICATING OIL, AIRCRAFT..... PISTON ENGINE-CORROSION RESISTANT, 16.6 CENTISTOKES AT 210 DEG F MAX VISCOSITY, MINUS 10 DEG F MAX POUR POINT, 420 DEG F MIN FLASH POINT BY CLEVELAND OPEN-CUP TEST METHOD, MIL-L-22851, TYPE 3, 55 GAL, 18 GAGE		DR			*	*	*		*		
			9150-985-7246	<81349>	GREASE, AIRCRAFT AND..... INSTRUMENT-GELLING AGENT, LOW TEMP LIQUID LUBRICANT W/EXTREME PRESSURE ADDITIVES, CORROSION, OXIDATION & WATER RESISTANT, LOW EVAPORATION, 270 TO 310 WORKED PENETRATION AT 77 DEG F,		LB			*	*	*		*		

(1) SOURCE, MAINT AND REC CODE (a) SOURCE CODE	(b) MAINT LEVEL	(c) REC CODE	(2) FEDERAL STOCK NUMBER	REFERENCE NUMBER	(3) DESCRIPTION	MODELS USABLE ON CH-34C	(4) UNIT OF ISSUE	(5) QTY INC IN UNIT PACK	(6) QTY INC IN UNIT	(7) 30-DAY DS/GS MAINT ALW (a) 1-20	(b) 21-50	(c) 51-100	(8) 1-YR ALW PER 100 EQUIP CNTGCY	(9) DEPOT MAINT ALW PER 100 EQUIP	(10) ILLUSTRATION (a) FIG NO	(b) ITEM NO
					CONTINUED 325 DEG F MIN DROPPING POINT,MINUS 65 TO PLUS 250 DEG F EFFICIENT TEMP RANGE, MIL-G-23827,1 LB CAN										MSUP	
			9150-985-7247	<81349>	GREASE,AIRCRAFT AND..... INSTRUMENT-LOW TEMP LIQUID LUBRICANT & A GELLING AGENT W/EXTREME PRESSURE ADDITIVE 270 TO 310 WORKED PENETRATION AT 77 DEG F,200 MIN UNWORKED PENETRATION AT 77 DEG F,325 DEG F MIN DROPPING POINT,MINUS 65 TO PLUS 250 DEG F EFFICIENT TEMP RANGE,300 DEG F,MAX OPERATING TEMP,CORROSION, OXIDATION,WATER & LOW EVAPORATION RESISTANT,FOR USE IN BALL,ROLLER & NEEDLE BEARINGS,GEARS & ON SLIDING & ROLLING SURFACES ON INSTRUMENTS,CAMERAS, ELECTRIC GEAR & AIRCRAFT CONTROL SYSTEMS,ALSO INTENDED FOR USE ON AIRCRAFT ACTUATOR SCREWS, MIL-G-23827,5 LB		CN			*	*	*		*		
			9620-276-7901	<81349>	GRAPHITE,DRY-NATURAL OR..... SYNTHETIC TYPE,POWDER FORM, MIL-G-6711,1 LB CAN		EA			*	*	*		*		

SECTION III

SPECIAL TOOLS, TEST AND SUPPORT EQUIPMENT

FUNCTIONAL GROUP 40

PART 1

AIRFRAME TOOLS

(1) SOURCE, MAINT AND REC CODE (a) SOURCE CODE	(b) MAINT LEVEL	(c) REC CODE	(2) FEDERAL STOCK NUMBER	REFERENCE NUMBER		(3) DESCRIPTION	MODELS USABLE ON CH-34C	(4) UNIT OF ISSUE	(5) QTY INC IN UNIT PACK	(6) QTY INC IN UNIT	(7) 30-DAY DS/GS MAINT ALW (a) 1-20	(b) 21-50	(c) 51-100	(8) 1-YR ALWPER 100 EQUIP CNTGCY	(9) DEPOT MAINT ALWPER 100 EQUIP	(10) ILLUSTRATION (a) FIG NO	(b) ITEM NO
			1560-586-6820	S1670-10447	<78286>	ARM ASSEMBLY,MAIN ROTOR..... RPL-BY 4920-658-8438										A18	
P	F		1560-625-9373	S1670-10487	<78286>	SEAL PUSHER,TRANSMISSION..... MAIN GEAR BOX		EA		1	*	*	*		*	A21	2
P	F		1560-630-9044	S1670-10609	<78286>	DISK,COUPLING,ALIGNMENT.....		EA		1	1	1	1		1	A22	
P	H		1560-792-6403	S1570-10750-20	<78286>	FIXTURE ASSEMBLY,TEST.....		EA		1	*	*	*		1	A5	2
P	H		1560-796-1283	S1670-10207	<78286>	FIXGURE,TEST.....		EA		1	*	*	*		1	A6	
P	D		1615-651-7294	S1670-10332-3	<78286>	PLUG,MAIN ROTOR STAR..... ASSEMBLY-ROTATING & STATIONARY STAR,3/4 IN.THK, 4 IN.W,9-3/32 IN.LG		EA		1					1	A10	3
P	D		1615-767-0450	S1670-10332-2	<78286>	PLATE,MAIN ROTOR.....		EA		1					1	A10	2
P	F		1730-028-1040	S1670-10388	<78286>	ADAPTER,HOISTING,AIRCRAFT.... ENGINE ACCESSORIES-THD TYPE,8-11/16 IN.LG,5-3/16 IN.W,1-1/2 IN.H		EA		1	*	*	*		*	A14	7
P	F		1730-277-7562	S1670-10151	<78286>	ADAPTER,HOISTING,AIRCRAFT.... PIN TYPE,18 IN.LG,18 IN.W, 25 IN.H RPLS-- 1730-293-3790		EA		1	1	1	1		1	A6	3
P	F		1730-277-7563	S1670-10397-1	<78286>	SLING,AIRCRAFT MAINTENANCE... ENGINE TYPE RPLS-- 1730-640-7102		EA		1	*	*	*		4	A16	2
			1730-293-3790	S1670-10402	<78286>	SLING,AIRCRAFT RPL-BY..... 1730-277-7562										A6	
P	F		1730-321-1028	S1570-10616	<78286>	TOWBAR,MOTOR VEHICLE-..... TRAILER TYPE,CLEVIS CONNECTIONS W/BOLT & PIP PIN ON TOWED END,EYE CONNECTION ON TOWING END, 40-3/8 IN.O/A LG		EA		1	1	1	1		1	A5	1
			1730-555-4600	S1670-10449	<78286>	SLING,AIRCRAFT MAINTENANCE... PYLON TYPE OBS-BY 1730-685-5658										A19	
P	D		1730-606-0299	S1570-10140-3	<78286>	SLING,AIRCRAFT MAINTENANCE... MAIN TRANSMISSION		EA		1					1	A2	5
P	D		1730-797-4793	S1570-10170-3	<78286>	.PROTECTOR,MAIN ROTOR PIN....		EA		2					1	A2	
			1730-608-6592	S1670-10650	<78286>	RESTRAINER ASSEMBLY,BLADE.... TAIL ROTOR CONTROL RPL-BY 1730-659-5259										A23	
			1730-625-0791	S1670-10650-11	<78286>	RESTRAINER ASSEMBLY,BLADE.... TAIL ROTOR CONTROL RIGGING RPL-BY 1730-659-5259										A23	
P	F		1730-633-0933	S1670-10624	<78286>	SUPPORT,TRANSMISSION..... OIL COOLER & BLOWER		EA		1	*	*	*		*	A22	4
P	F		1730-633-0935	S1670-10105-2	<78286>	SLING,AIRCRAFT MAINTENANCE... TAIL CONE		EA		1	*	*	*		*	A5	5
				S1670-10106-1	<78286>	.BELT ASSEMBLY,TAIL.....		EA		1						A5	
				S1670-10106-2	<78286>	.BELT ASSEMBLY,TAIL.....		EA		1						A5	
P	D		1730-658-8436	S1670-10107-16	<78286>	SLING,AIRCRAFT MAINTENANCE...		EA		1					1	A5	6
X2	D			S1670-10107-12	<78286>	.WELD ASSEMBLY,CANOPY,COCKPIT		EA		1					*	A5	
P	F		1730-659-5259	S1670-10650-13	<78286>	BLADE RESTRAINER ASSEMBLY....		EA		1	*	*	*		1	A23	2

(1) SOURCE, MAINT AND REC CODE (a) SOURCE CODE	(b) MAINT LEVEL	(c) REC CODE	(2) FEDERAL STOCK NUMBER	REFERENCE NUMBER		(3) DESCRIPTION	MODELS USABLE ON CH-34C	(4) UNIT OF ISSUE	(5) QTY INC IN UNIT PACK	(6) QTY INC IN UNIT	(7) 30-DAY DS/GS MAINT ALW (a) 1-20	(b) 21-50	(c) 51-100	(8) 1-YR ALW PER 100 EQUIP CNTGCY	(9) DEPOT MAINT ALW PER 100 EQUIP	(10) ILLUSTRATION (a) FIG NO	(b) TEM NO
						CONTINUED TAIL ROTOR CONTROL RIGGING RPLS-- 1730-608-6592, 1730-625-0791										A23	2
P	F		1730-685-5658	S1670-10449-4	<78286>	SLING,AIRCRAFT MAINTENANCE... PYLON HOISTING RPLS-- 1730-555-4600		EA		1	1	1	1		1	A19	1
P	F		1740-544-4712	S1670-10108	<78286>	DOLLY,MAIN ROTOR..... TRANSPORTATION		EA		1	*	*	*		2	A6	1
P	F		1740-673-0366	S1670-10570-1	<78286>	DOLLY-TRANSMISSION,MAIN..... GEAR BOX & ROTOR HEAD OBSLTS 4920-629-9775		EA		1	*	*	*		2	A21	5
P	D		2925-523-6944	QB80111-1	<19315>	BRIDGE,PULLER.....		EA		1					*	A15	5
P	D		2925-523-6945	QB80112-1	<19315>	PUSHER,BUSHING.....		EA		1					*	A15	6
P	D		4920-028-1060	S1670-10370	<78286>	TORQUE STAND,MAIN ROTOR.....		EA		1					2	A12	7
X2	D			S1670-10370-6	<78286>	.STOP,MAIN ROTOR-SLEEVE &.... SPINDLE FIXTURE,TORQUING		EA		1					*	A12	
P	F		4920-099-3517	S1670-10333	<78286>	PLATE,MAIN ROTOR ROTATING.... STAR		EA		1	*	*	*		2	A10	4
P	D		4920-099-3524	S1670-10358	<78286>	STEP RING,TRANSMISSION SYSTEM		EA		1					2	A11	5
P	D		4920-099-3525	S1670-10359	<78286>	PLATE,REACTION,TRANSMISSION..		EA		1					2	A11	6
P	F		4920-099-3529	S1670-10364	<78286>	CAP,SHAFT,TRANSMISSION-MAIN.. GEAR BOX UPPER HOUSING		EA		1	*	*	*		2	A12	3
			4920-099-3532	S1670-10368	<78286>	CAP,STEP,TRANSMISSION-MAIN... GEAR BOX RPL-BY 4920-633-0095										A12	
P	D		4920-099-3533	S1670-10369	<78286>	PLUG,CENTERING,TRANSMISSION..		EA		2					4	A12	6
			4920-099-3538	S1670-10375	<78286>	PLATE,TRANSMISSION SYSTEM.... RPL-BY 4920-567-9371										A13	
P	D		4920-099-3542	S1670-10380	<78286>	RING,SUPPORT,TRANSMISSION....		EA		1					2	A14	1
P	D		4920-099-3546	S1670-10385	<78286>	CAP,PULLER BEARING..... TRANSMISSION		EA		1					2	A14	5
P	D		4920-099-3547	S1670-10386	<78286>	CAP,SHAFT,TRANSMISSION SYSTEM		EA		1					1	A14	6
P	D		4920-099-3550	S1670-10390	<78286>	WASHER,MAIN ROTOR HINGE.....		EA		1					2	A15	1
P	D	R	4920-204-2283	S1670-10414	<78286>	STAND,MAINTENANCE,AIRCRAFT... ENGINE-RIGID, FIXED POSITION,2 FT LG,2 FT W,2 FT 3-1/2 IN.H		EA		1					4	A17	4
P	H		4920-215-4304	ST1620-64100-500T98-5	<78286>	FITTING FIXTURE.....		EA		1	*	*	*		*	A17	
			4920-302-6431	S1670-10321	<78286>	SLEEVE INSTALLING,MAIN..... ROTOR USE UNTIL EXHAUSTED,NO REPLACEMENT		EA		1						A9	
P	D		4920-302-6436	S1670-10398	<78286>	ADAPTER,SPLINE,TRANSMISSION..		EA		1					2	A16	3
P	D		4920-302-6442	S1670-10407	<78286>	THIMBLE,SEAL EXPANDER,MAIN...		EA		1					2	A17	2
P	D		4920-306-5235	S1670-10354	<78286>	SUPPORT,INPUT HOUSING..... RPLS-- 4920-589-1354		EA		1					2	A11	4
			4920-310-2076	S1670-10338	<78286>	THIMBLE,OIL SEAL MOUNTING.... RPL-BY 1560-388-0438										A10	
P	F		4920-310-2077	S1670-10339	<78286>	THIMBLE,OIL SEAL MOUNTING.... MAIN GEAR BOX,ACCESSORIES SECTION PUMP,STEEL,2-3/4		EA		1	*	*	*		*	A10	7

(1) SOURCE, MAINT AND REC CODE (a) SOURCE CODE	(b) MAINT CATEGORY	(c) REC CODE	(2) FEDERAL STOCK NUMBER	REFERENCE NUMBER	(3) DESCRIPTION	MODELS USABLE ON CH-34C	(4) UNIT OF ISSUE	(5) QTY INC IN UNIT PACK	(6) QTY INC IN UNIT	(7) 30-DAY DS/GS MAINT ALW (a) 1-20	(b) 21-50	(c) 51-100	(8) 1-YR ALW PER 100 EQUIP CNTGCY	(9) DEPOT MAINT ALW PER 100 EQUIP	(10) ILLUSTRATION (a) FIG NO	(b) ITEM NO
					CONTINUED IN.LG,0.971 IN.TO 0.976 IN. DIA										A10	7
P	F		4920-310-2078	S1670-10340 <78286>	THIMBLE,OIL SEAL MOUNTING....		EA		1	*	*	*		2	A10	
P	F		4920-310-2079	S1670-10341 <78286>	THIMBLE,OIL SEAL MOUNTING....		EA		1	*	*	*		*	A10	8
P	D		4920-318-1951	S1670-10415 <78286>	MAINTENANCE PLATFORM-FIXED... TYPE,W/4 CASTERS,46 IN.LG, 46 IN.W,34 IN.H		EA		1					4	A17	5
P	F		4920-388-0438	S14-50-4161 <78286>	THIMBLE,OIL SEAL,MAIN..... TRANSMISSION RPLS-- 4920-310-2076		EA		1	1	1	1		2	A2	2
P	H		4920-475-7882	S1670-10210 <78286>	FIXTURE,HOLDING-SERVO..... CYLINDER		EA		1	*	*	*		1	A6	6
P	F		4920-535-1795	S1570-10217-1 <88369>	ADAPTER,MAIN ROTOR HORN..... STEEL,1-13/16 IN.DIA,2-7/16 IN.O/A LG		EA		1	*	*	*		*	A3	5
P	H		4920-544-4723	S1670-10435 <78286>	THIMBLE,SPLINE-TAIL ROTOR....		EA		1	*	*	*		2	A18	3
			4920-565-4903	S1670-10471 <78286>	FIXTURE ASSEMBLY,TAIL ROTOR.. DRIVE OBS-BY 4920-678-4819										A20	
P	F		4920-567-9371	S1570-10350 <78286>	BRIDGE,TRANSMISSION SYSTEM... RPLS-- 4920-099-3521, 4920-099-3522, 4920-099-3530, 4920-099-3538, 5120-302-6440, 5120-306-5237,& 5120-336-3412		EA		1	1	1	1		1	A4	4
P	F		4920-571-6226	NMT62A0107 <13184>	ANTI-TORQUE PLATE..... TRANSMISSION SYSTEM DISCONNECT,TAIL GEAR BOX		EA		1	1	1	1		1	A16	5
P	O		4920-575-1621	D730 <78286>	ATTACHMENT,DRAIN-TUBE.....		EA		1	*	*	*		*	A1	2
			4920-589-1354	S1670-10354-1 <78286>	SUPPORT,TRANSMISSION SYSTEM.. RPL-BY 4920-306-5235										A11	
P	D		4920-604-5211	S1670-10486 <78286>	DISK ASSEMBLY-TRANSMISSION... SYSTEM,HYDRO-MECHANICAL CLUTCH COUPLING		EA		1					4	A21	1
X2	D			S1670-10486-2 <78286>	.DOWEL,COUPLING DISK ASSEMBLY		EA		1					*	A21	
P	F		4920-605-5936	S1570-10377-4 <78286>	FLANGE ADAPTER ASSEMBLY..... MAIN GEAR BOX,OUTER SHAFT RPLS-- 4920-573-7382		EA		1	1	1	1		1	A4	5
			4920-611-3926	387015-2 <77932>	FUEL CALIBRATION UNIT..... USE UNTIL EXHAUSTED,NO REPLACEMENT		EA		1						A24	6
P	O		4920-613-5426	S1670-10458-1 <78286>	CAP,RESTRAINER,MAIN ROTOR.... SLEEVE & SPINDLE ASSY RPLS-- 4920-302-5402		EA		1	1	1	1		1	A19	5
P	D		4920-623-5972	QB80114-1 <19315>	HOLDER,ARMATURE.....		EA		1					*	A17	3
P	D		4920-623-5974	QB80119-1 <19315>	BLOCK RIVETING.....		EA		1					1	A5	
P	F		4920-628-2568	25C01 <89513>	HEAD ASSEMBLY,TEST.....		EA		1	1	1	1		1	A24	
P	D		4920-629-1622	S1670-10312-1 <78286>	SUPPORT,TRANSMISSION..... HYDRO-MECHANICAL CLUTCH CYLINDER		EA		1					2	A5	

(1) SOURCE, MAINT AND REC CODE (a) SOURCE CODE	(b) MAINT LEVEL	(c) REC CODE	(2) FEDERAL STOCK NUMBER	REFERENCE NUMBER		(3) DESCRIPTION	MODELS USABLE ON CH-34C	(4) UNIT OF ISSUE	(5) QTY INC IN UNIT PACK	(6) QTY INC IN UNIT	(7) 30-DAY DS/GS MAINT ALW (a) 1-20	(b) 21-50	(c) 51-100	(8) 1-YR ALW PER 100 EQUIP CNTGCY	(9) DEPOT MAINT ALW PER 100 EQUIP	(10) ILLUSTRATION (a) FIG NO	(b) ITEM NO
			4920-629-9775	S1670-10570	<78286>	DOLLY-TRANSMISSION,MAIN..... GEAR BOX OBS-BY 1740-673-0366										A21	
P	F		4920-630-0989	S1670-10608	<78286>	COUPLING,ALIGNMENT.....		EA		1	1	1	1		1	A22	2
P	D		4920-633-0095	S1670-10368-1	<78286>	CAP,MAIN GEAR BOX,PLANETARY.. SYSTEM STEP RPLS-- 4920-099-3532		EA		1					2	A12	5
P	F		4920-633-0096	S1670-10374-5	<78286>	PUSHER,BEARING-GEAR BOX.....		EA		1	1	1	1		1	A13	3
P	D		4920-633-0098	S1670-10406-2	<78286>	PRE-LOADER,BEARING,MAIN.....		EA		1					2	A17	1
P	F		4920-633-0959	S1670-10111-3	<78286>	CONE,SPLIT-MAIN ROTOR..... TRANSPORTATION DOLLY		EA		1	1	1	1		1	A6	2
P	O		4920-633-0963	S1670-10637	<78286>	PROTECTOR ASSEMBLY,PYLON.....		EA		1	*	*	*		1	A23	1
P	F		4920-633-0965	S1670-10201-1	<78286>	RIGGING BLOCK-MAIN ROTOR..... SERVO		EA		1	1	1	1		1	A6	4
P	O		4920-633-0966	S1670-10201-2	<78286>	RIGGING BLOCK-MAIN ROTOR..... SERVO		EA		1	1	1	1		1	A6	
P	F		4920-633-0967	S1670-10201-3	<78286>	RIGGING BLOCK-MAIN ROTOR..... SERVO		EA		1	1	1	1		1	A6	
P	F		4920-654-1388	S1670-10331-3	<78286>	PLATE,MAIN ROTOR STATIONARY.. STAR-1 IN.ID,9-1/8 IN.OD, 1-1/4 IN.THK		EA		1	*	*	*		2	A9	7
P	D		4920-654-1524	S1670-10307-3	<78286>	WRENCH ADAPTER,MAIN..... TRANSMISSION		EA		1					2	A7	3
P	D		4920-654-1525	S1670-10309-1	<78286>	WRENCH,PLANETARY GAGE.....		EA		1					2	A7	5
P	F		4920-658-8438	S1670-10447-7	<78286>	ARM ASSEMBLY,MAIN ROTOR..... HEAD LOCKNUT RPLS-- 1560-586-6820		EA		1	1	1	1		1	A18	5
			4920-658-8439	S1670-10471-15	<78286>	FIXTURE ASSEMBLY-TAIL ROTOR.. DRIVE SHAFT RPL-BY 4920-678-4819										A20	
P	F		4920-674-1264	S1670-10564-3	<78286>	RIGGING TOOL,MAIN ROTOR BLADE		EA		1	1	1	1		1	A21	3
P	F		4920-678-4819	S1670-10471-22	<78286>	ALIGNMENT FIXTURE ASSEMBLY... TAIL ROTOR DRIVE SHAFT RPLS-- 4920-565-4903, 4920-658-8439		EA		1	1	1	1		1	A20	3
P	F		4920-690-7510	95S	<50941>	JACK,SHACKLE.....		EA		1	1	1	1		1	A25	3
P	D		4920-874-7050	S1670-10676	<78286>	TEST FIXTURE ASSEMBLY.....		EA		1					2	A23	4
P	F		4920-945-9564	B24C14	<89513>	EXPANSION PLUG ASSEMBLY.....		EA		1	*	*	*		1	A1A	
P	H		4920-946-6939	AT1977	<81039>	FIXTURE,HOLDING.....		EA		1	*	*	*		1	A1A	
P	H		4920-946-6941	AT1890	<81039>	FIXTURE,MOUNT.....		EA		1	*	*	*		*	A1A	
P	H		4920-946-6987	AT1939	<81039>	FIXTURE,BACKLASH CHECKING....		EA		1	*	*	*		1	A1A	
P	H		4920-946-7002	AT2878	<81039>	PANEL,TEST,DC.....		EA		1	*	*	*		1	A1A	
P	H		4920-946-7003	AT3042	<81039>	ARM LOAD TEST.....		EA		1	*	*	*		1	A1A	
P	D		4920-991-3280	S1670-10418	<78286>	LOCK,MAIN TRANSMISSION..... LOWER HOUSING GEAR		EA		1					*	A18	1
P	O		4930-339-1165	92168	<89446>	PARTS KIT,GREASE GUN ADAPTER.		EA		1	*	*	*		1	A1	5
P	O		4930-672-2011	S1670-10629	<78286>	ADAPTER ASSEMBLY,GREASE GUN..		EA		1	*	*	*		*	A3	9
P	H		5110-758-7311	S1615-20126	<78286>	REAMER,HAND.....		EA		1	*	*	*		1	A3	3
P	D		5120-030-7934	916	<45225>	ADAPTER,THREADED.....		EA		1					1	A1A	
P	D		5120-030-7938	630-12	<45225>	ADAPTER,STEP PLATE.....		EA		1					1	A1	3

(1) SOURCE, MAINT AND REC CODE (a) SOURCE CODE	(b) MAINT LEVEL	(c) REC CODE	(2) FEDERAL STOCK NUMBER	REFERENCE NUMBER		(3) DESCRIPTION	MODELS USABLE ON CH-34C	(4) UNIT OF ISSUE	(5) QTY INC IN UNIT PACK	(6) QTY INC IN UNIT	(7) 30-DAY DS/GS MAINT ALW (a) 1-20	(b) 21-50	(c) 51-100	(8) 1-YR ALW PER 100 EQUIP CNTGCY	(9) DEPOT MAINT ALW PER 100 EQUIP	(10) ILLUSTRATION (a) FIG NO	(b) ITEM NO
P	D		5120-030-7942	1002L	<45225>	PULLER,MECHANICAL-GEAR &..... BEARING,SINGLE END GRIP, TWO JAW,EXTERNAL,0 TO 10 IN.SPREAD RANGE,9 IN.REACH		EA		4					2	A23	6
P	D		5120-069-9612	S1670-10455	<78286>	BEARING PUSHER,MAIN ROTOR....		EA		1					1	A3	1
P	F		5120-081-9055	LAW114	<55719>	SOCKET WRENCH ATTACHMENT..... SOCKET HEAD SCREW-HEX,PLUG, 7/16 IN.SIZE,1/2 IN.SQ DRIVE		EA		1	1	1	1		1	A1	4
P	H		5120-092-8457	S1670-10304	<78286>	DRIFT-PLATE TAIL ROTOR SEAL.. & REMOVAL DRIFT		EA		1	*	*	*		2	A7	1
P	F		5120-092-8458	S1670-10305	<78286>	DRIFT,CYLINDER TAIL ROTOR.... HUB BEARING-INSTALLING & REMOVAL,STEEL,3.750 IN.LG, 1.554 IN.MIN 1.559 IN.MAX DIA		EA		1	1	1	1		1	A7	2
P	F		5120-096-5881	S1670-10308	<78286>	SOCKET,WRENCH,FACE SPANNER... 8 PRONGS,0.230 IN.W,1/2 IN.LG,1/2 IN.SQ FEMALE DRIVE,11/16 IN.OD		EA		1	1	1	1		1	A7	4
			5120-096-5882	S1670-10310	<78286>	WRENCH,TRANSMISSION RPL-BY.. 5120-602-8567										A18	
P	D		5120-096-5884	S1670-10313	<78286>	PRESS,CYLINDER TRANSMISSION..		EA		1					1	A8	2
			5120-099-3523	S1670-10357	<78286>	PUSH PULLER,TRANSMISSION..... RPL-BY 5120-654-3237										A11	
P	H		5120-099-3527	S1670-10362	<78286>	PUSHER,BEARING RPLS--..... 5120-099-3541		EA		1	*	*	*		2	A12	1
P	D		5120-099-3540	S1670-10378	<78286>	PUSHER,TRANSMISSION SYSTEM...		EA		1					2	A13	6
P	F		5120-099-3544	S1670-10383	<78286>	WRENCH,HYDRO-MECHANICAL.....		EA		1	1	1	1		1	A14	3
P	H		5120-099-3551	S1670-10394	<78286>	WRENCH,SPANNER..... NONADJUSTABLE,3 LUGS,21/64 IN.THK LUG,3/16 IN.W LUG, 10-1/2 IN.O/A LG,6-9/16 IN.DIA OPENING		EA		1	*	*	*		*	A15	4
P	O		5120-189-7928	MS1625-38	<96906>	SOCKET,SOCKET WRENCH.....		EA		1	*	*	*		*	A3	
P	F		5120-302-5857	515S	<45225>	SCREW,FORCING,PULLER.....		EA		1	*	*	*		1	A25	1
P	D		5120-302-6433	S1670-10351	<78286>	PUSHER,BEARING,TRANSMISSION..		EA		1					*	A11	3
P	F		5120-302-6437	S1670-10399	<78286>	WRENCH,MAIN ROTOR,HYDRAULIC.. LOCKNUT		EA		1	1	1	1		1	A16	4
X1				S1670-10399-1	<78286>	.WRENCH.....		EA		1						A16	
P	F		5120-303-3516	S1570-10217-5	<78286>	WRENCH,MAIN ROTOR HORN..... ASSEMBLY		EA		1	1	1	1		1	A3	6
P	D		5120-306-5233	S1570-10230	<78286>	PULLER,MAIN GEAR BOX ROD.....		EA		1					2	A4	1
P	D		5120-308-3771	630-3	<45225>	ADAPTER,STEP PLATE.....		EA		1					1	A25	2
			5120-313-7020	S1670-10322	<78286>	INSTALLER,MAIN ROTOR SPACER.. RPL-BY 5120-606-1755										A9	
P	F		5120-330-5090	S1570-10117	<78286>	SOCKET,WRENCH,FACE SPANNER... 8 PRONGS,0.172 IN.W,1/4 IN. LG,3/4 IN.SQ DRIVE,2-1/4 IN.OD		EA		1	1	1	1		1	A2	4
P	D		5120-330-5091	505436	<02106>	WRENCH,SPANNER..... NONADJUSTABLE TABLE LUG		EA		1					2	A7	6

(1) SOURCE, MAINT AND REC CODE (a) SOURCE CODE	(b) MAINT LEVEL	(c) REC CODE	(2) FEDERAL STOCK NUMBER	REFERENCE NUMBER		(3) DESCRIPTION	MODELS USABLE ON CH-34C	(4) UNIT OF ISSUE	(5) QTY INC IN UNIT PACK	(6) QTY INC IN UNIT	(7) 30-DAY DS/GS MAINT ALW (a) 1-20	(b) 21-50	(c) 51-100	(8) 1-YR ALW PER 100 EQUIP CNTGCY	(9) DEPOT MAINT ALW PER 100 EQUIP	(10) ILLUSTRATION (a) FIG NO	(b) ITEM NO
						CONTINUED TYPE,6-7/8 IN.DIA OPENING, 45 DEG ANGLE BETWEEN LUGS, 17/64 IN.DIA HOLE,34/64 IN. THK LUG,1 IN.W LUG										A7	6
			5120-336-3412	S1670-10349	<78286>	PUSHER,BEARING,TRANSMISSION.. RPL-BY 4920-567-9371										A11	
			5120-348-4855	S1570-10179-1	<78286>	ADAPTER,WRENCH-MAIN ROTOR.... DAMPER RPL-BY 5120-672-0414										A2	
P	H		5120-394-5224	43193	<86263>	WRENCH-CYLINDER HEAD,..... INSTALLING & REMOVING ADAPTER,SINGLE HYDRAULIC BRAKE U/O 1630-534-6555		EA		1	*	*	*		1	A24	4
P	D		5120-394-5408	QB80118-1	<19315>	PUNCH,RIVETING.....		EA		1					*	A24	1
P	F		5120-449-3953	S14-50-4102	<78286>	SOCKET,WRENCH,FACE SPANNER... 4 PRONGS,0.172 IN.W,1/2 IN. LG,1/2 IN.SQ FEMALE DRIVE, 1-3/4 IN.OD		EA		1	1	1	1		2	A2	1
P	H		5120-506-8152	S1570-10264	<78286>	PUSHER,INTERMEDIATE HOUSING..		EA		1	*	*	*		2	A4	2
P	D		5120-506-8168	S1570-10308	<78286>	PUSHER ASSEMBLY,MAIN ROTOR...		EA		1					2	A4	3
P	H		5120-544-4729	S1670-10438	<78286>	PULLER,TAIL ROTOR SPINDLE....		EA		1	*	*	*		2	A18	4
			5120-561-7142	S1670-10433	<78286>	SOCKET,WRENCH,FACE SPANNER... RPL-BY 5120-602-8567										A18	
P	F		5120-562-3173	S1670-10347	<78286>	WRENCH,SPANNER-MAIN..... TRANSMISSION GEAR BOX,INPUT HOUSING		EA		1	*	*	*		2	A11	1
P	H		5120-566-5311	S1670-10452	<78286>	SOCKET,WRENCH,FACE SPANNER... 4 PRONGS,0.163 IN.W,7/16 IN.LG,3/4 IN.SQ FEMALE DRIVE,2-5/8 IN.OD		EA		1	*	*	*		2	A19	2
P	F		5120-571-3620	S10-50-4147-10	<78286>	REMOVER,BOLT AND BEARING.....		EA		1	1	1	1		2	A1	9
P	F		1560-773-2318	S10-50-4147-2	<78286>	.PIN,MAIN ROTOR HUB..... ASSEMBLY-BOLT & BEARING		EA		1	*	*	*		1	A1	
MF	F			S10-50-4147-6	<78286>	.CHAIN,REMOVER-MAIN ROTOR.... HUB ASSEMBLY BOLT & BEARING		EA		1	*	*	*		*	A1	
P	F		5120-708-0083	S10-50-4147-8	<78286>	.PLATE,MAIN ROTOR HUB..... ASSEMBLY-BOLT & BEARING		EA		1	*	*	*		1	A1	
P	D		5120-589-1347	505269	<02106>	SOCKET,WRENCH,FACE SPANNER... 4 PRONGS,0.227 IN.W,1/4 IN. LG,2-1/2 IN.OD,3/4 IN.SQ FEMALE DRIVE		EA		1					1	A9	3
P	D		5120-589-1348	S1670-10330-3	<78286>	ADAPTER,WRENCH.....		EA		1					2	A9	6
P	D		5120-589-1349	S1670-10337-3	<78286>	SOCKET,WRENCH,FACE SPANNER... NONADJUSTABLE,TABLE LUG TYPE,11/32 IN.THK LUG,11/32 IN.W LUG,4-3/4 IN.DIA OPENING,4-7/8 IN.OD,1-5/8 IN.O/A LG,3/4 IN.SQ FEMALE DRIVE		EA		1					2	A10	6
P	D		5120-589-1350	S1670-10371-3	<78286>	WRENCH--STEEL,,APPL,.....		EA		1					*	A13	1

(1) SOURCE, MAINT AND REC CODE (a) SOURCE CODE	(b) MAINT LEVEL	(c) REC CODE	(2) FEDERAL STOCK NUMBER	REFERENCE NUMBER	(3) DESCRIPTION	MODELS USABLE ON CH-34C	(4) UNIT OF ISSUE	(5) QTY INC IN UNIT PACK	(6) QTY INC IN UNIT	(7) 30-DAY DS/GS MAINT ALW (a) 1-20	(b) 21-50	(c) 51-100	(8) 1-YR ALW PER 100 EQUIP CNTGCY	(9) DEPOT MAINT ALW PER 100 EQUIP	(10) ILLUSTRATION (a) FIG NO	(b) ITEM NO
					CONTINUED										A13	1
					HELICOPTER TRANSPORT LIGHT,											
P	D		5120-589-1351	S1670-10372-3 <78286>	PUSHER,BEARING.....		EA		1					2	A13	2
X2	D			S1670-10372-5 <78286>	.PUSH ROD.....		EA		1					*	A13	
P	D		5120-589-1352	S1670-10376-1 <78286>	PLATE,TAIL ROTOR GEAR BOX....		EA		1					2	A13	4
P	F		5120-591-0668	S1670-10453 <78286>	REMOVING AND INSTALLING.....		EA		1	1	1	1		1	A19	3
					TOOL-MAIN ROTOR HORN											
P	D		5120-596-4407	S1670-10382 <78286>	SOCKET,WRENCH,FACE SPANNER...		EA		1					2	A14	2
					8 PRONGS,0.235 IN.W,3/16 IN.LG,3.105 IN.OD,3/4 IN.SQ FEMALE DRIVE											
P	F		5120-602-8567	S1670-10433-3 <78286>	WRENCH ASSEMBLY TAIL ROTOR...		EA		1	1	1	1		1	A18	2
					HUB RPLS-- 5120-096-5882, 5120-561-7142											
P	D		5120-605-8990	S1670-10314-1 <78286>	SOCKET,WRENCH,FACE SPANNER...		EA		1					2	A8	3
					8 PRONGS,15/32 IN.LG,SQ SHAPE,7-3/4 IN.OS DIA											
P	D		5120-606-1755	S1670-10457 <78286>	SEAL PUSHER,BEARING-MAIN.....		EA		1					2	A19	4
					ROTOR SLEEVE & SPINDLE ASSY RPLS-- 5120-313-7020											
P	D		5120-608-6414	S1670-10466 <78286>	PUSHER,PLUG-TRANSMISSION.....		EA		1					1	A19	7
					SYSTEM,PLATE,2-1/8 IN.DIA, 1/4 IN.THK,TUBE,1 IN.DIA,12 IN.LG											
P	D		5120-608-6415	S1670-10467 <78286>	PULLER ASSEMBLY-BUSHING,.....		EA		1					1	A19	8
					TRANSMISSION SYSTEM,MAIN GEAR BOX											
P	F		5120-608-6416	S1670-10485 <78286>	SEAL PRESS CYLINDER.....		EA		1	1	1	1		1	A20	7
P	F		5120-608-6417	S1670-10468 <78286>	SEAL PUSHER,TRANSMISSION.....		EA		1	1	1	1		1	A20	1
					MAIN GEAR BOX UPPER HOUSING SEAL											
P	F		5120-608-6591	S1670-10469 <78286>	RING,REACTION-MAIN GEAR BOX..		EA		1	1	1	1		1	A20	2
					UPPER HOUSING											
P	F		5120-609-4346	S1670-10484 <78286>	PUSHER-MAIN ROTOR STAR.....		EA		1	1	1	1		1	A20	6
					BEARING											
P	D		5120-609-4348	S1670-10475 <78286>	PUSHER,BEARING-TRANSMISSION..		EA		1					1	A20	4
					SYSTEM,MAIN GEAR BOX,REAR COVER											
P	D		5120-613-9373	QB80001-6 <19315>	WRENCH.....		EA		1					*	A24	3
P	D		5120-613-9387	QB80116-1 <19315>	WRENCH,OPEN LUG.....		EA		1					*	A17	4
P	F		5120-624-7004	SWE81048 <87641>	ADAPTER,POWER WRENCH.....		EA		1	1	1	1		1	A1	8
P	F		5120-626-1933	CC404 <07971>	C CLAMP.....		EA		1	1	1	1		1	A1	
			5120-629-1733	S1670-10605 <78286>	INSTALLER ASSEMBLY,SEAL,.....		EA		1						A22	
					MAIN GEAR BOX USE UNTIL EXHAUSTED,NO REPLACEMENT											
P	O		5120-629-4710	S1670-10328 <78286>	WRENCH,SPANNER.....		EA		1	1	1	1		1	A9	4
					NONADJUSTABLE FACE TYPE, OPEN END,1-1/2 IN.DIA,6 IN. O/A LG											
			5120-629-4711	S1670-10602 <78286>	INSTALLER ASSEMBLY,SEAL,.....		EA		1						A22	
					MAIN GEAR BOX USE UNTIL EXHAUSTED,NO REPLACEMENT											

(1) SOURCE, MAINT AND REC CODE (a) SOURCE CODE	(b) MAINT LEVEL	(c) REC CODE	(2) FEDERAL STOCK NUMBER	REFERENCE NUMBER		(3) DESCRIPTION	MODELS USABLE ON CH-34C	(4) UNIT OF ISSUE	(5) QTY INC IN UNIT PACK	(6) QTY INC IN UNIT	(7) 30-DAY DS/GS MAINT ALW (a) 1-20	(b) 21-50	(c) 51-100	(8) 1-YR ALW PER 100 EQUIP CNTGCY	(9) DEPOT MAINT ALW PER 100 EQUIP	(10) ILLUSTRATION (a) FIG NO	(b) ITEM NO
			5120-629-4712	S1670-10603	<78286>	INSTALLER ASSEMBLY,SEAL,..... MAIN GEAR BOX USE UNTIL EXHAUSTED,NO REPLACEMENT		EA		1						A22	
P	F		5120-629-4713	S1670-10604	<78286>	INSTALLER ASSEMBLY,SEAL,..... MAIN GEAR BOX		EA		1	1	1	1		1	A22	
P	D		5120-629-9784	S1670-10363-4	<78286>	PUSHER,MAIN GEAR BOX UPPER... HOUSING BEARING		EA		1					2	A12	2
P	D		5120-629-9787	S1670-10384-3	<78286>	WRENCH,HYDRO-MECHANICAL..... CLUTCH,TRANSMISSION SYSTEM		EA		1					2	A14	4
P	F		5120-631-5766	S1670-10479-14	<78286>	PULLER ASSEMBLY,TRANSMISSION.		EA		1	1	1	1		1	A20	5
P	F		5120-632-1238	S1570-10190	<78286>	WRENCH,TORQUE-HYDRAULIC,..... DRIVE CYLINDER,MAIN ROTOR RPLS-- 4920-302-5391 & 4920-302-5392		EA		1	1	1	1		1	A3	2
P	D		5120-632-4326	S1670-10600	<78286>	WRENCH ASSEMBLY-MAIN ROTOR... INNER SPACER RPLS-- 5120-302-5395		EA		1					2	A22	1
P	D		5120-632-9434	S1670-10392-6	<78286>	WRENCH,TAIL ROTOR GEAR BOX...		EA		1					2	A15	2
P	F		5120-633-0971	S1670-10673	<78286>	WRENCH,OPEN END,FIXED-0.500.. IN.OPENING,45 DEG HEAD,4-1/2 IN.O/A LG,1/8 IN.THK OF HEAD		EA		1	1	1	1		1	A23	3
P	D	R	5120-654-3237	S1670-10459-4	<78286>	PULLER ASSEMBLY,MAIN GEAR.... BOX-LOWER HOUSING RPLS-- 5120-099-3523		EA		1					4	A19	6
P	F		5120-654-3241	S1670-10626-4	<78286>	WRENCH,SPANNER.....		EA		1	1	1	1		1	A22	5
P	H		5120-672-0414	S1570-10179-6	<78286>	WRENCH,ADAPTER AND..... PROTECTORS-MAIN ROTOR RPLS-- 5120-348-4855		EA		1	*	*	*		2	A2	7
X1				S1570-10179-5	<78286>	.PROTECTOR,DAMPER ASSEMBLY...		EA		1						A2	
P	H		5120-683-8614	S1670-10334	<78286>	CROWFOOT ATTACHMENT,SOCKET... WRENCH-NONRATCHETING,12 POINT OPEN WALL BOX,0.011 IN.DRIVE OPENING,3.265 IN. TO 3.275 IN.WRENCH OPENING		EA		1	1	1	1		1	A10	5
P	H		5120-691-1022	14022	<84685>	ADJUSTING TOOL.....		EA		1	*	*	*		1	A24	2
P	D		5120-765-8715	S1670-10932-5	<78286>	SOCKET,WRENCH,FACE SPANNER...		EA		1					2	A23	5
P	D		5120-767-2111	S1670-10612-8	<78286>	WRENCH ADAPTER,TORQUE..... ASSEMBLY		EA		1					2	A22	3
P	H		5120-771-7178	PB37861-1	<19315>	PINION AND RATCHET ASSEMBLY..		EA		1	*	*	*		1	A1A	
P	D		5120-979-5639	S1670-10377	<78286>	PUSHER,TRANSMISSION.....		EA		1					2	A13	5
P	D		5120-979-5655	S1670-10393	<78286>	ADAPTER,TORQUE WRENCH.....		EA		1					2	A15	3
P	D		5120-983-4060	S1670-10348	<78286>	PUSHER,BEARING,TAKEOFF.....		EA		1					2	A11	2
P	D		5120-986-7205	S1670-10360	<78286>	PUSHER,BEARING TRANSMISSION..		EA		1					*	A11	7
P	F		5136-277-6705	807482	<66640>	TAP,THREAD CUTTING.....		EA		1	*	*	*		*	A5	
P	F		5210-795-1063	S1670-10566	<78286>	PROTRACTOR ASSEMBLY.....		EA		1	*	*	*		*	A24	6
P	O		5210-894-5196	S6170-35124-1	<78286>	GAGE,THICKNESS RPLS--..... 5120-629-4718		EA		1	*	*	*		1	A3	
P	H		5220-202-8639	S1615-20126T20-17	<78286>	GAGE.....		EA		1	*	*	*		1	A9	5
P	D		5220-212-3362	QB80005-13	<19315>	GAGE,PLUG.....		EA		1					*	A24	5
P	O		5220-300-3053	S1670-10396	<78286>	TRACKOMETER,MAIN ROTOR BLADE.		EA		1	*	*	*		*	A16	1
P	O		1615-586-6817	S1670-10396-3	<78286>	.FLAG ASSEMBLY,TRACKOMETER...		EA		1	*	*	*		9	A16	

(1) SOURCE, MAINT AND REC CODE (a) SOURCE CODE	(b) MAINT LEVEL	(c) REC CODE	(2) FEDERAL STOCK NUMBER	REFERENCE NUMBER	(3) DESCRIPTION	MODELS USABLE ON CH-34C	(4) UNIT OF ISSUE	(5) QTY INC IN UNIT PACK	(6) QTY INC IN UNIT	(7) 30-DAY DS/GS MAINT ALW (a) 1-20	(b) 21-50	(c) 51-100	(8) 1-YR ALW PER 100 EQUIP CNTGCY	(9) DEPOT MAINT ALW PER 100 EQUIP	(10) ILLUSTRATION (a) FIG NO	(b) ITEM NO
					CONTINUED										A16	
					MAIN ROTOR BLADES											
P	F		5220-907-2263	SKP3575 <78286>	PLUG,GAGE.....		EA		1	*	*	*		*	A2	8
P	D		5307-341-9067	S1670-10315 <78286>	STUD,PLAIN.....		EA		1					2	A8	4
P	D		5310-208-4107	S1570-10229 <78286>	PULLER,NUT,MAIN GEAR BOX.....		EA		1					1	A3	7
		R	8115-300-8602	339A1 <98425>	SHIPPING AND STORAGE..... CONTAINER,TRANSMISSION-MAIN RPL-BY 8115-975-7120										A24	
		R	8115-532-7327	E1-6599-100 <84639>	SHIPPING AND STORAGE..... CONTAINER,ROTOR BLADES RPL-BY 8115-777-0048										A1	
		R	8115-560-1175	56026 <05259>	SHIPPING AND STORAGE..... CONTAINER,HELICOPTER ROTARY BLADE RPL-BY 8115-777-0048										A25	
		R	8115-569-4834	D389A1 <98425>	SHIPPING AND STORAGE..... CONTAINER,TRANSMISSION-MAIN RPL-BY 8115-975-7120										A1	
		R	8115-614-4808	E1-6563 <84639>	SHIPPING AND STORAGE..... CONTAINER,HELICOPTER ROTARY BLADES USE UNTIL EXHAUSTED,NO REPLACEMENT		EA		1						A1	
		R	8115-614-4811	E11261-1-300 <84639>	SHIPPING AND STORAGE..... CONTAINER,HELICOPTER ROTARY BLADE RPL-BY 8115-777-0048										A1	
		R	8115-614-4849	56075-1 <02259>	SHIPPING AND STORAGE..... CONTAINER,HELICOPTER ROTARY BLADE RPL-BY 8115-777-0048										A25	
P	F	R	8115-777-0048	58B001-1 <02259>	SHIPPING AND STORAGE..... CONTAINER,HELICOPTER ROTARY BLADE RPLS-- 8115-523-7327, 8115-560-1175, 8115-614-4811, 8115-614-4849, 8115-614-4850, 8115-719-4934,& 8115-778-4810		EA			*	*	*		*	A25	4
		R	8115-799-1775	E3-10673-1 <84639>	SHIPPING AND STORAGE..... CONTAINER,TAIL ROTOR PYLON, QUICK CHANGE ASSEMBLY ALUMINUM ENAMELED, CYLINDRICAL,174-11/16 IN. LG,85-11/16 IN.DIA,90 IN.H USE UNTIL EXHAUSTED,NO REPLACEMENT		EA		1						A1	
P	F	R	8115-814-5298	<81349>	SHIPPING AND STORAGE..... CONTAINER,TRANSMISSION-TAIL GEAR BOX,MIL-C-9282 INTRCH 8115-614-4809,8115-719-5528		EA		1	*	*	*		1	A25	
P	F	R	8115-856-0452	8115CON008 <81996>	SHIPPING AND STORAGE..... CONTAINER,MAIN ROTOR HUB MIL-C-9282A RPLS--		EA		1	*	*	*		1	A25	

(1) SOURCE, MAINT AND REC CODE (a) SOURCE CODE	(b) MAINT LEVEL	(c) REC CODE	(2) FEDERAL STOCK NUMBER	REFERENCE NUMBER	(3) DESCRIPTION	MODELS USABLE ON CH-34C	(4) UNIT OF ISSUE	(5) QTY INC IN UNIT PACK	(6) QTY INC IN UNIT	(7) 30-DAY DS/GS MAINT ALW (a) 1-20	(b) 21-50	(c) 51-100	(8) 1-YR ALW PER 100 EQUIP CNTGCY	(9) DEPOT MAINT ALW PER 100 EQUIP	(10) ILLUSTRATION (a) FIG NO	(b) ITEM NO
					CONTINUED										A25	
					8115-300-8603											
P	F	R	8115-975-7120	8115CON001 <81996>	SHIPPING AND STORAGE..... CONTAINER,MAIN TRANSMISSION RPLS-- 8115-300-8602, 8115-569-4834,& 8115-614-4847		EA		1	*	*	*		1	A25	
AD	D			S1670-10317-8 <78286>	WRENCH ASSEMBLY AND ADAPTER..		EA		1					1	A8	
P	D		5120-632-4325	S1670-10317-5 <78286>	.ADAPTER,WRENCH ASSEMBLY.....		EA		1					1	A8	6
P	D		5120-650-7077	S1670-10317-9 <78286>	.SOCKET,WRENCH,FACE SPANNER..		EA		1					1	A8	7
AD	D			S1670-10319 <78286>	PULLER ASSEMBLY-MAIN ROTOR... SLEEVE & SPINDLE ARM		EA		1					1	A9	
P	D		5120-650-7076	S1670-10319-1 <78286>	.ARM,PULLER.....		EA		2					1	A9	1
P	D		5120-650-7079	S1670-10319-2 <78286>	.CAP,MAIN ROTOR SLEEVE &..... SPINDLE ARM PULLER		EA		1					1	A9	2
AF	F			S1670-10413 <78286>	ADAPTER,ENGINE BUILDUP,STAND.		EA		1	*	*	*		*	A1	1
P	F		1730-305-8648	S1670-10413-1 <78286>	.SUPPORT ASSEMBLY ENGINE.....		EA		1	*	*	*		1	A1	
P	F		1730-525-6223	S1670-10413-3 <78286>	.SUPPORT ASSEMBLY,ENGINE.....		EA		1	*	*	*		1	A1	

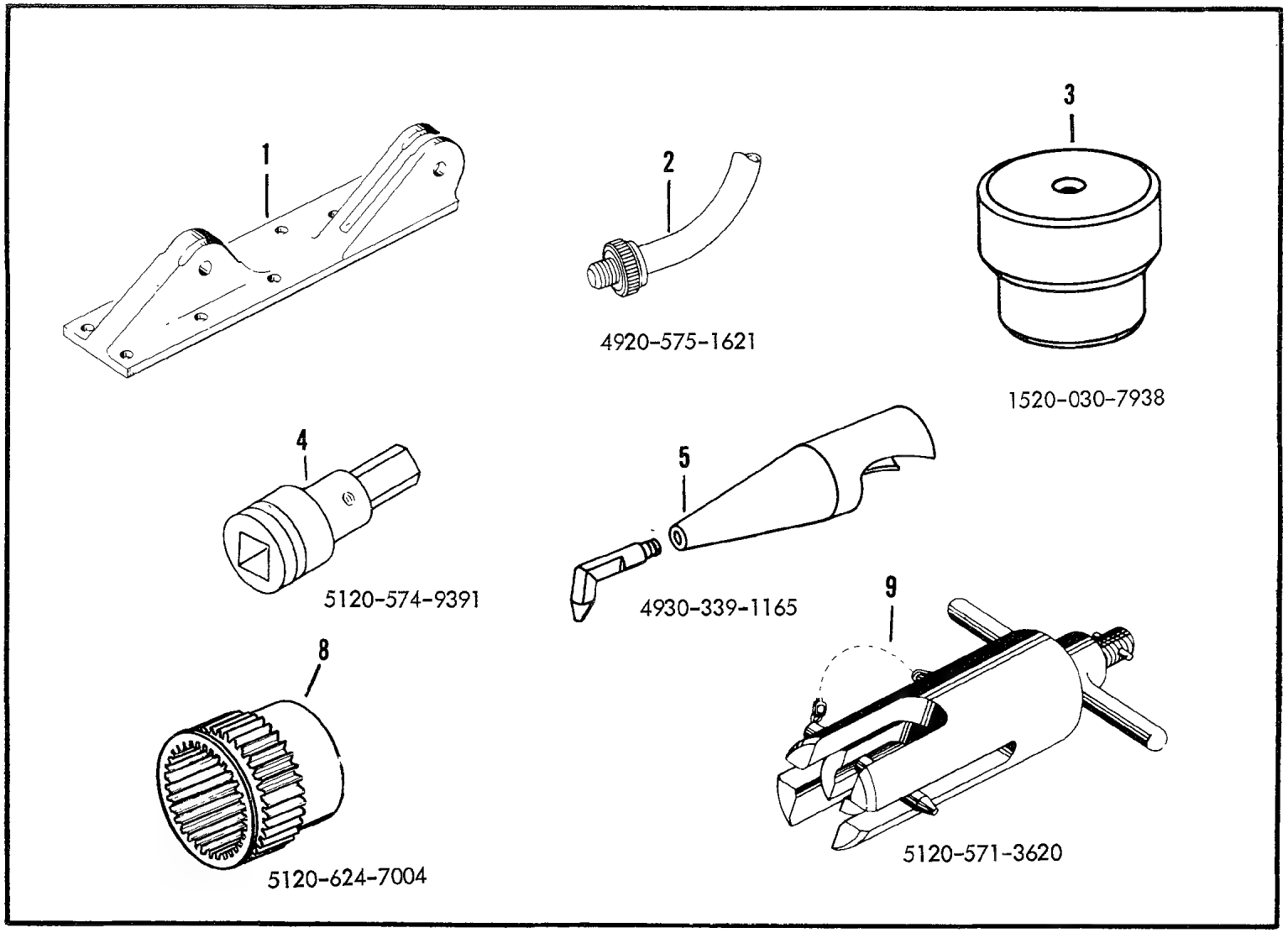

Figure A1. Airframe Tools

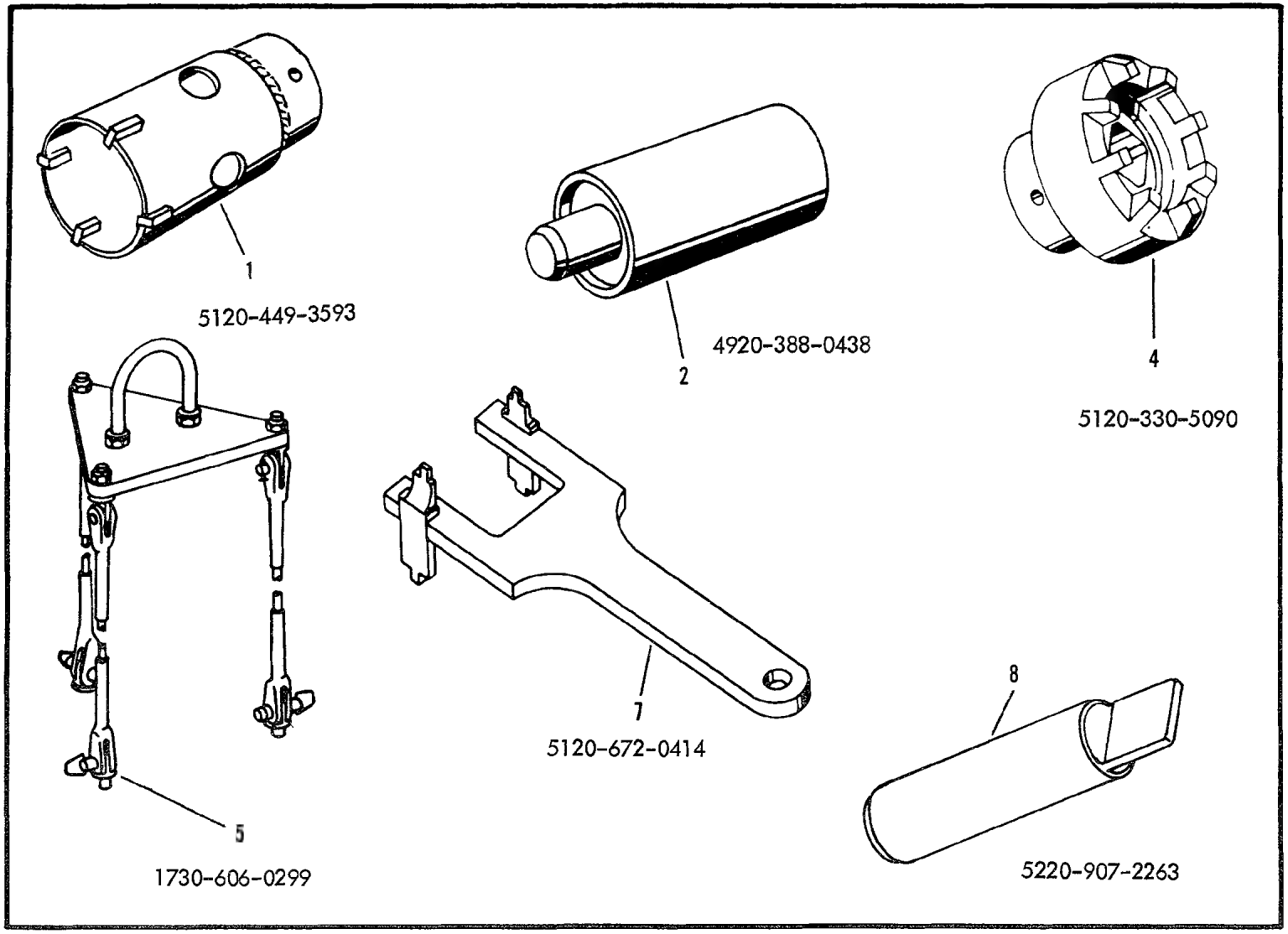

Figure A2. Airframe Tools

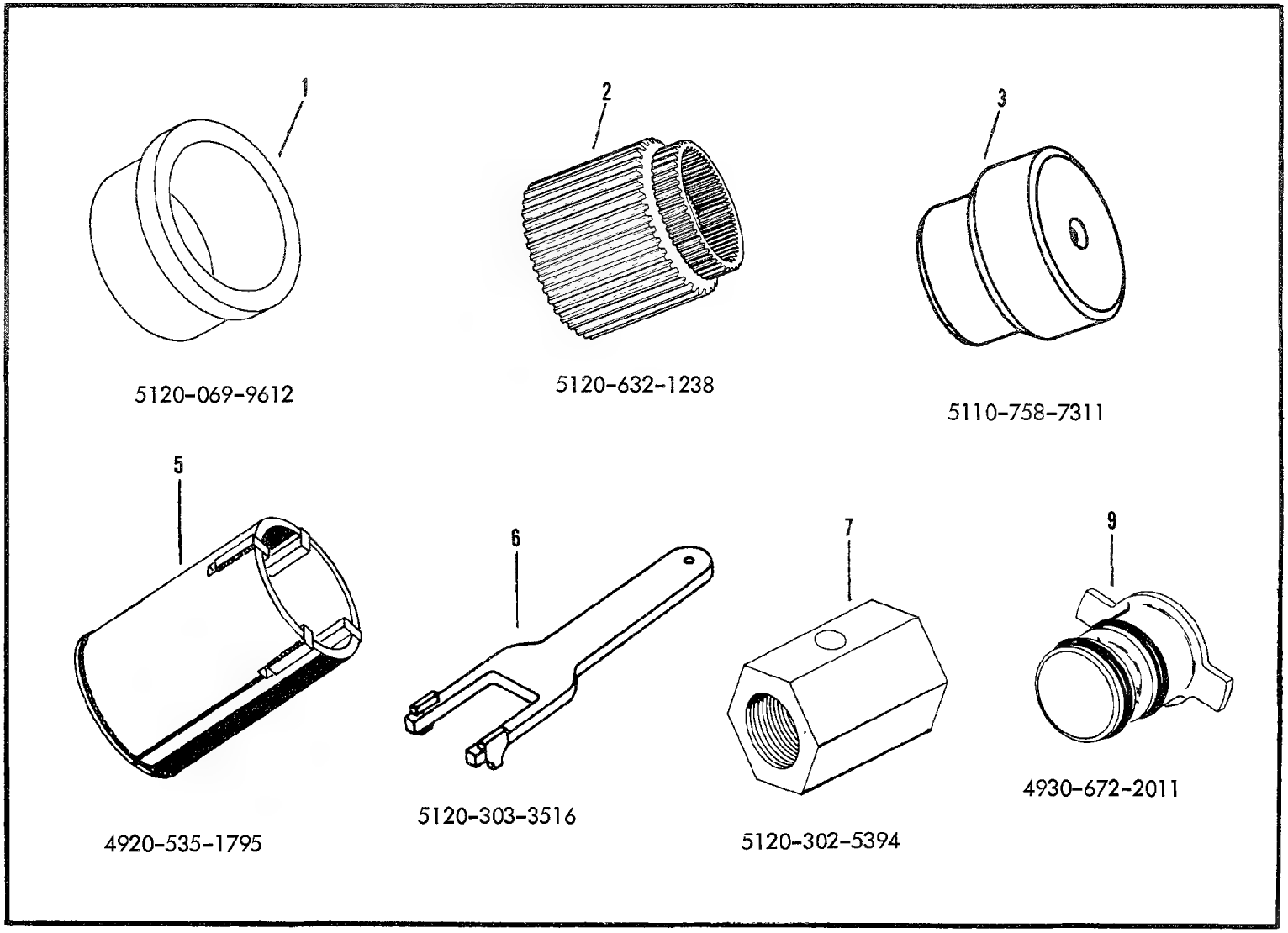

Figure A3. Airframe Tools

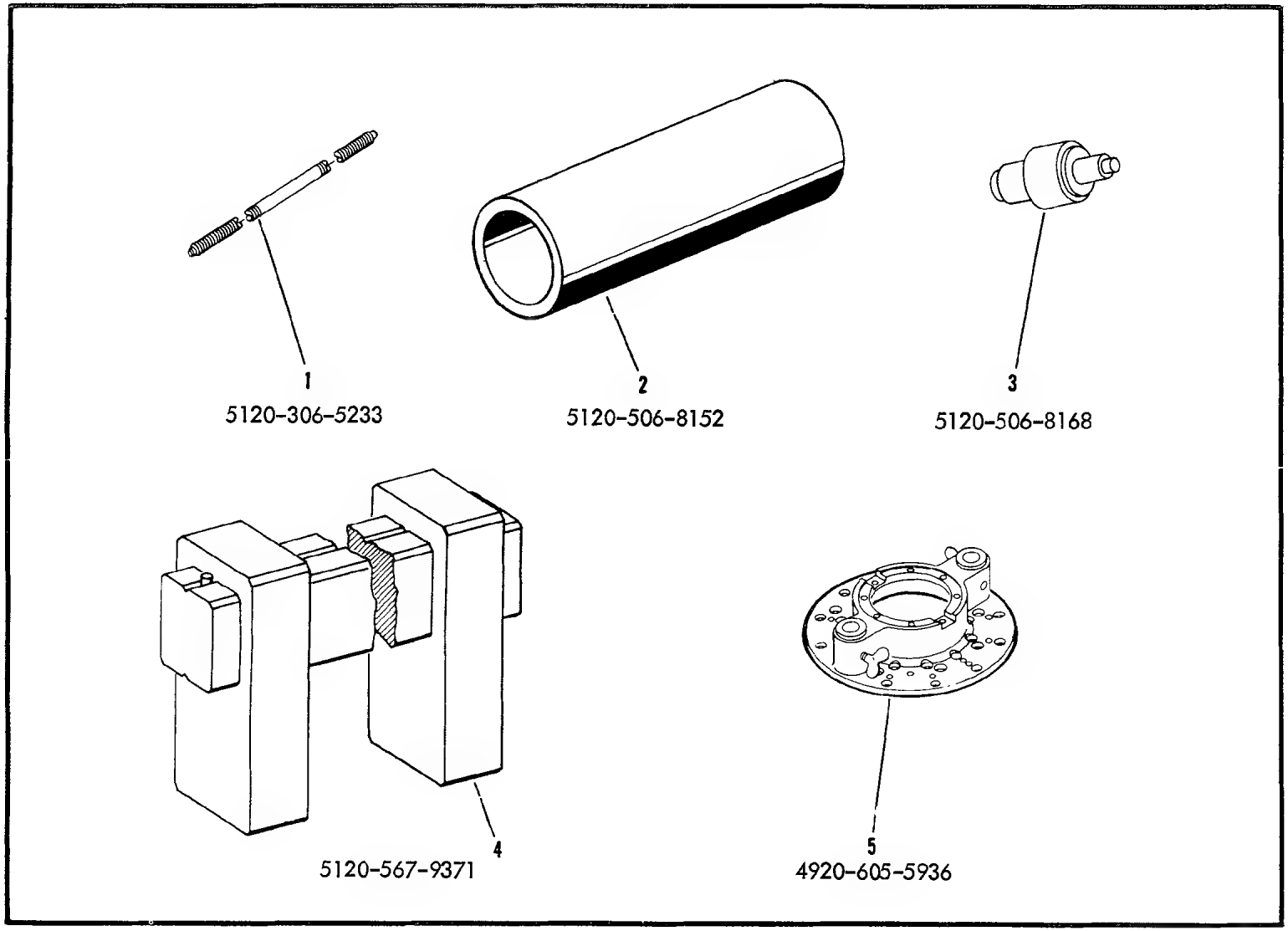

Figure A4. Airframe Tools

1305

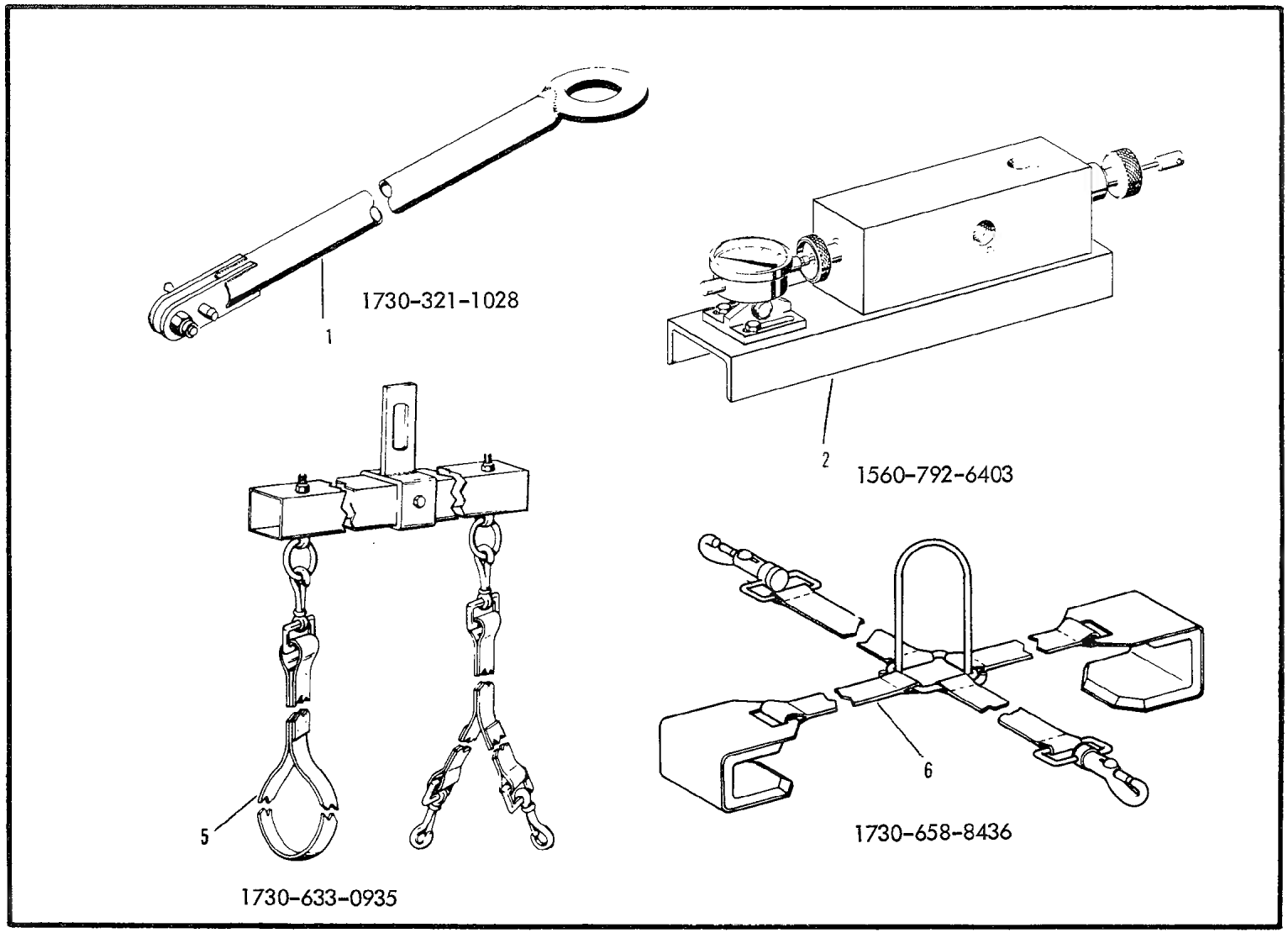

1305

Figure A5. Airframe Tools

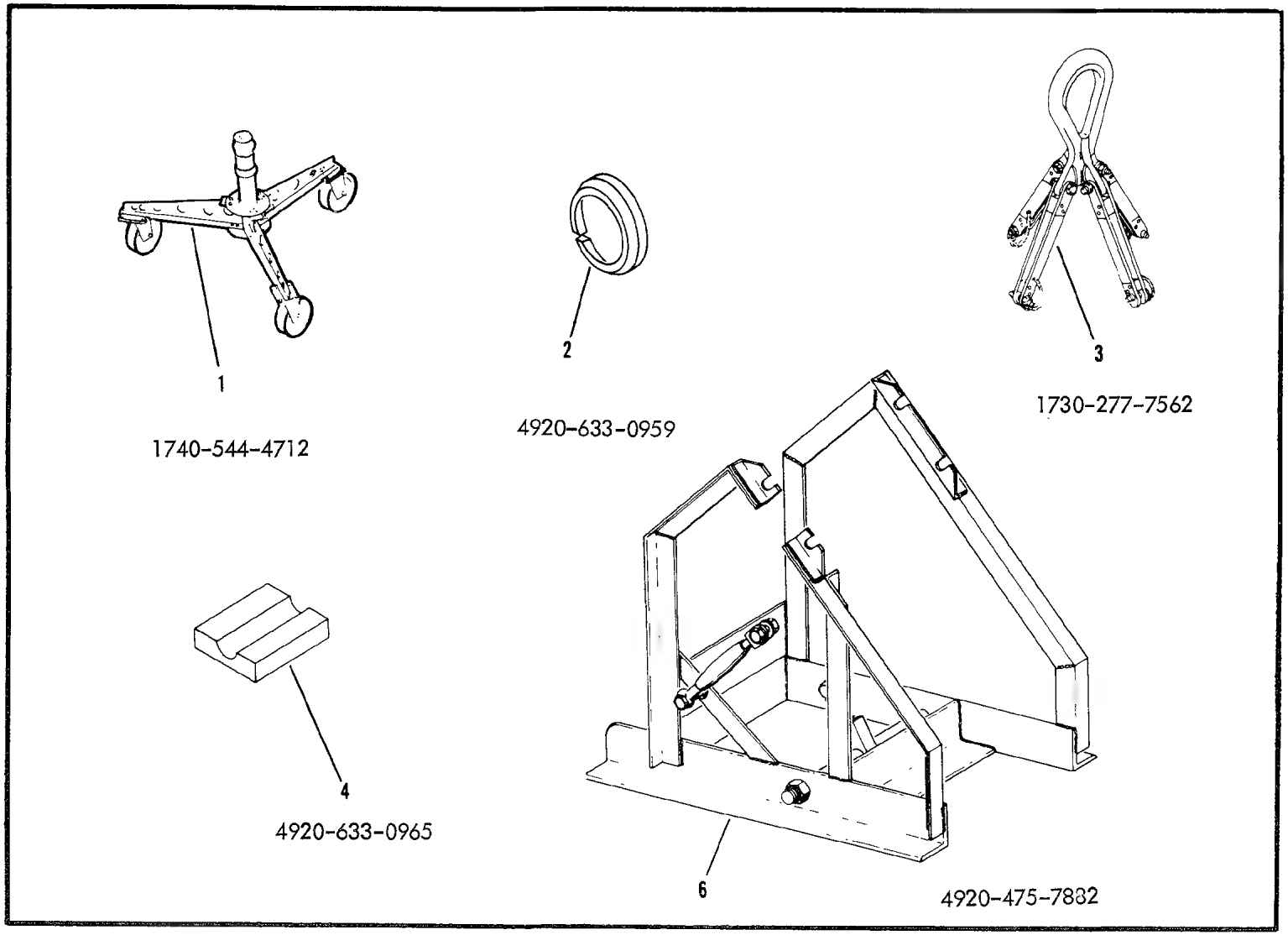

Figure A6. Airframe Tools

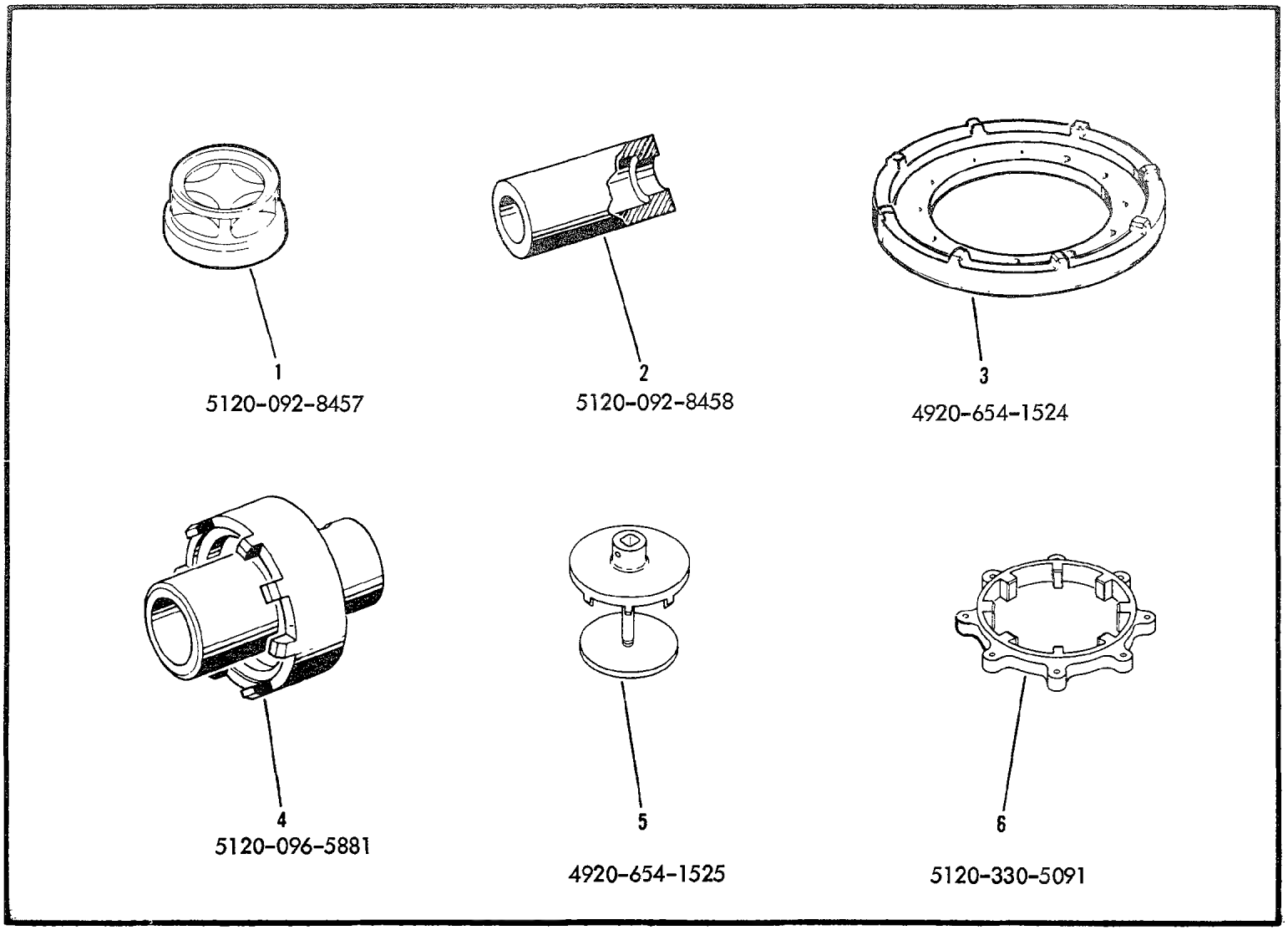

Figure A7. Airframe Tools

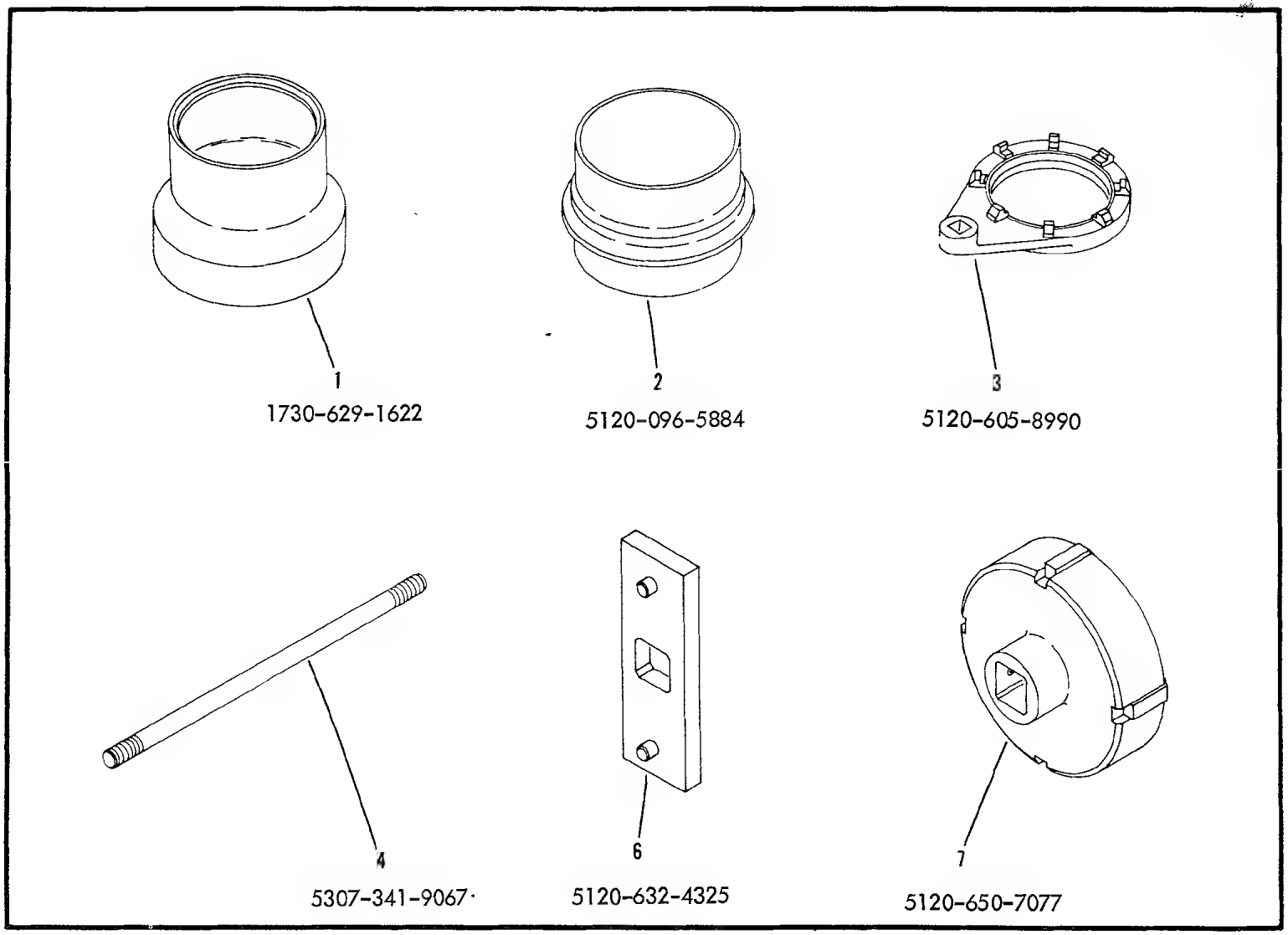

Figure A8. Airframe Tools

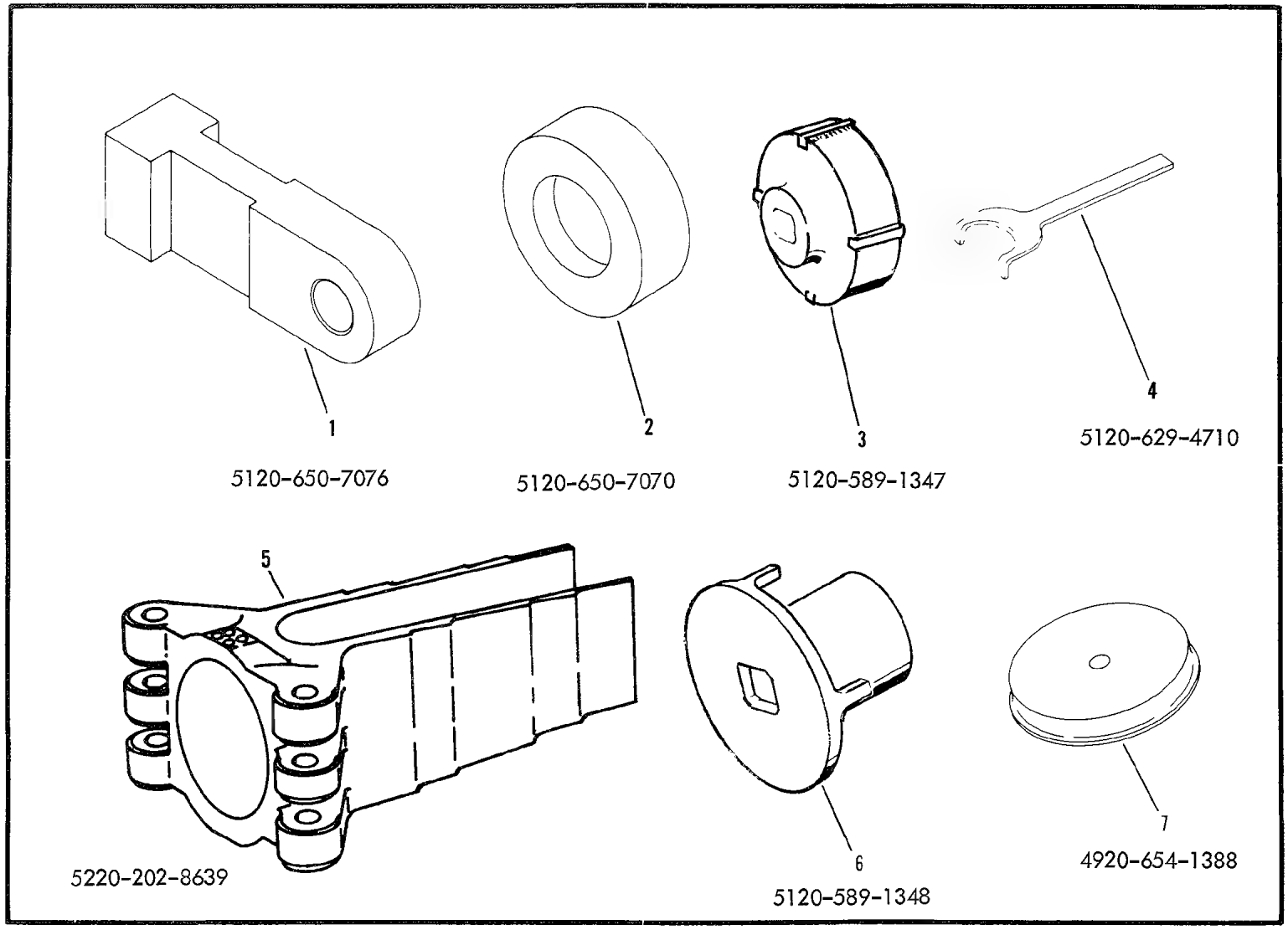

Figure A9. Airframe Tools

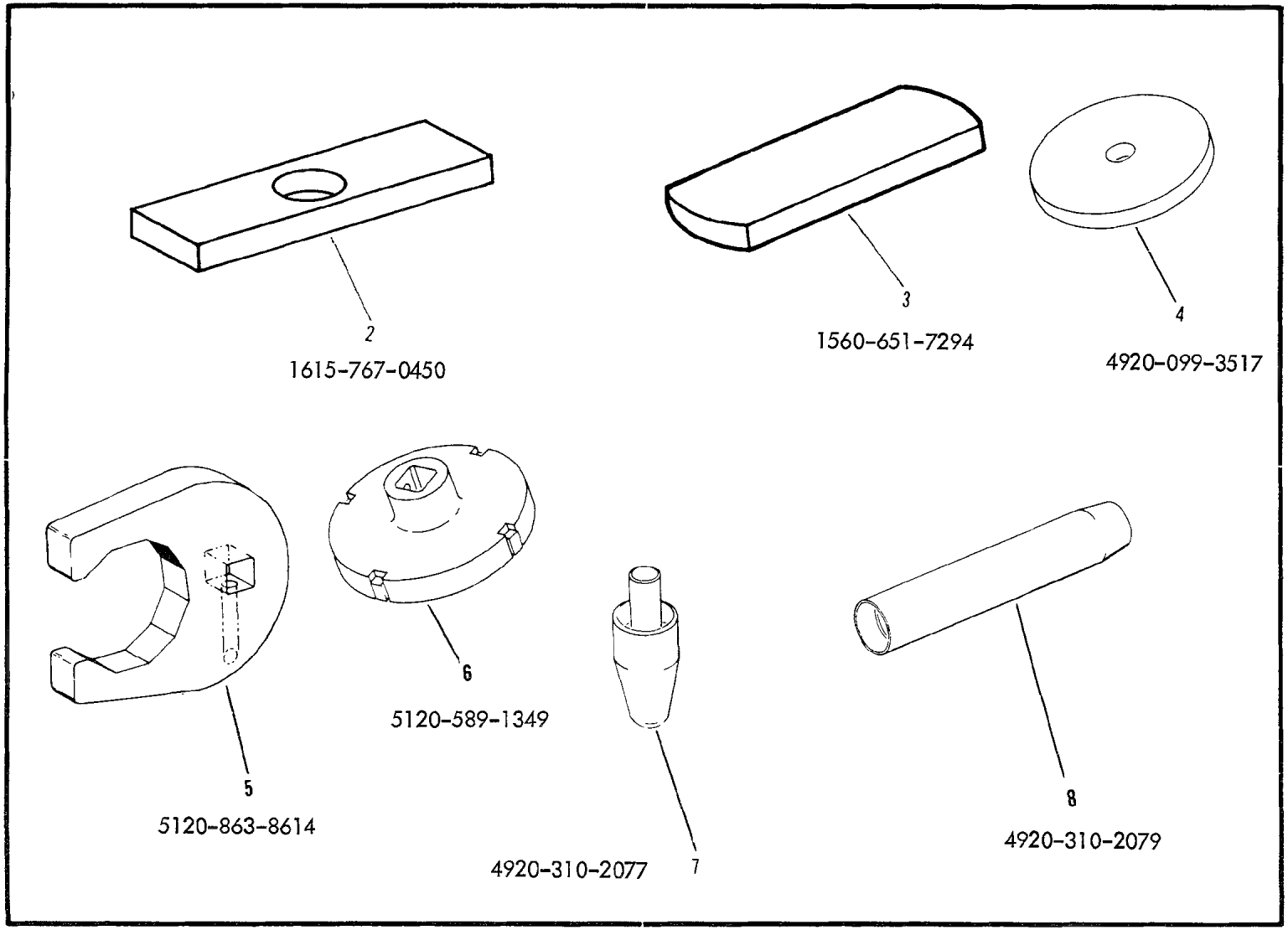

Figure A10. Airframe Tools

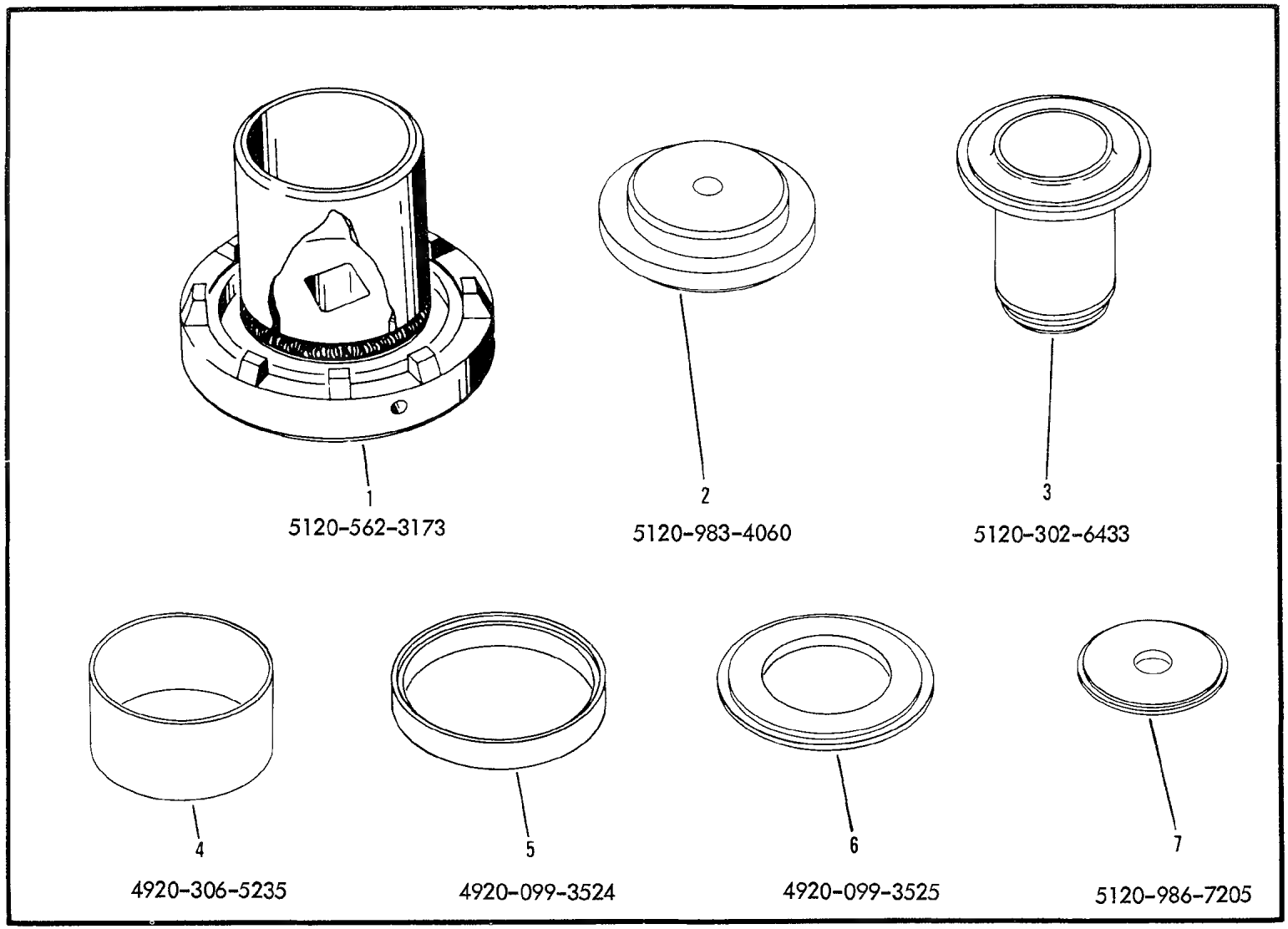

Figure A11. Airframe Tools

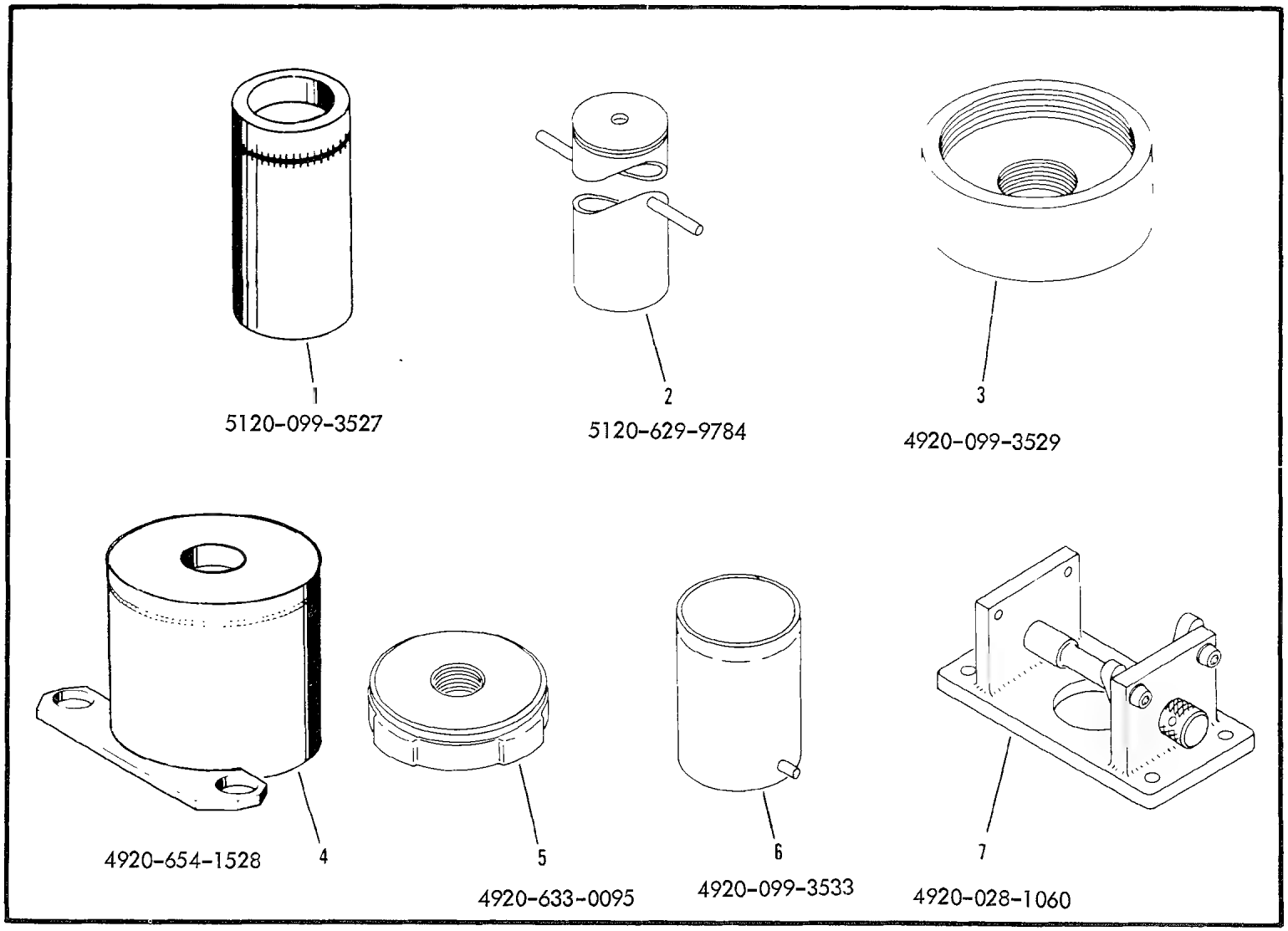

Figure A12. Airframe Tools

1313

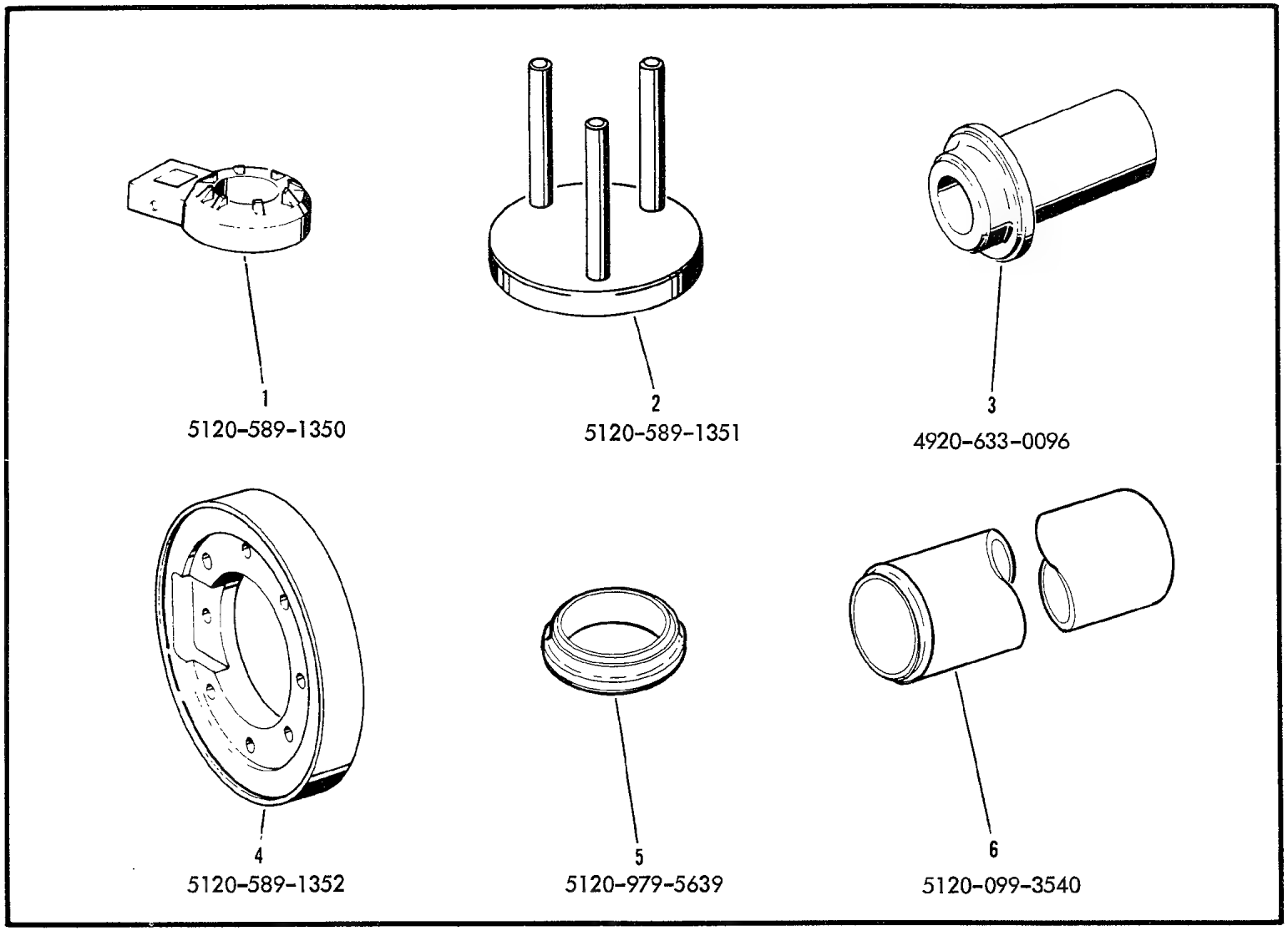

1313

Figure A13. Airframe Tools

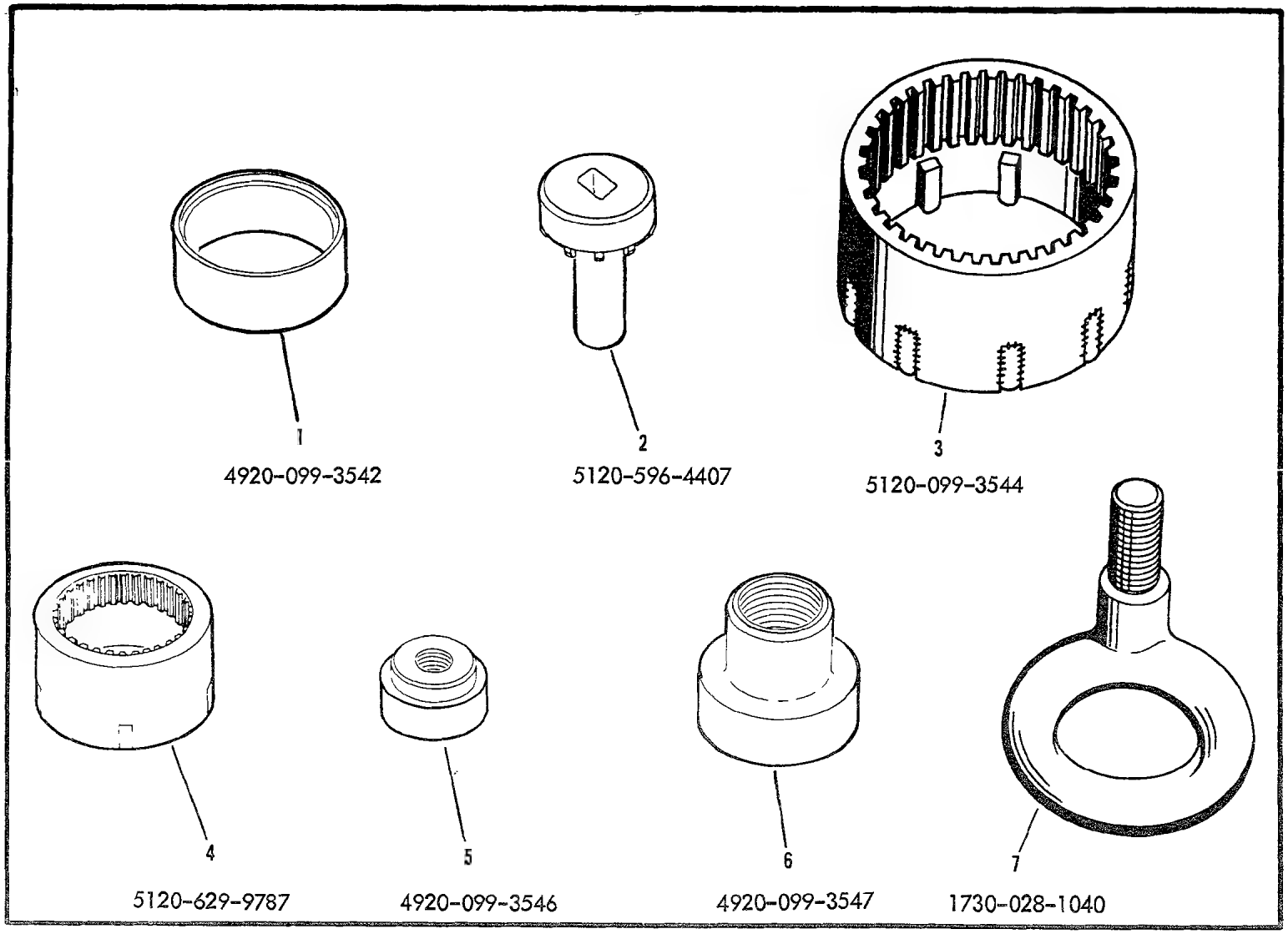

Figure A14. Airframe Tools

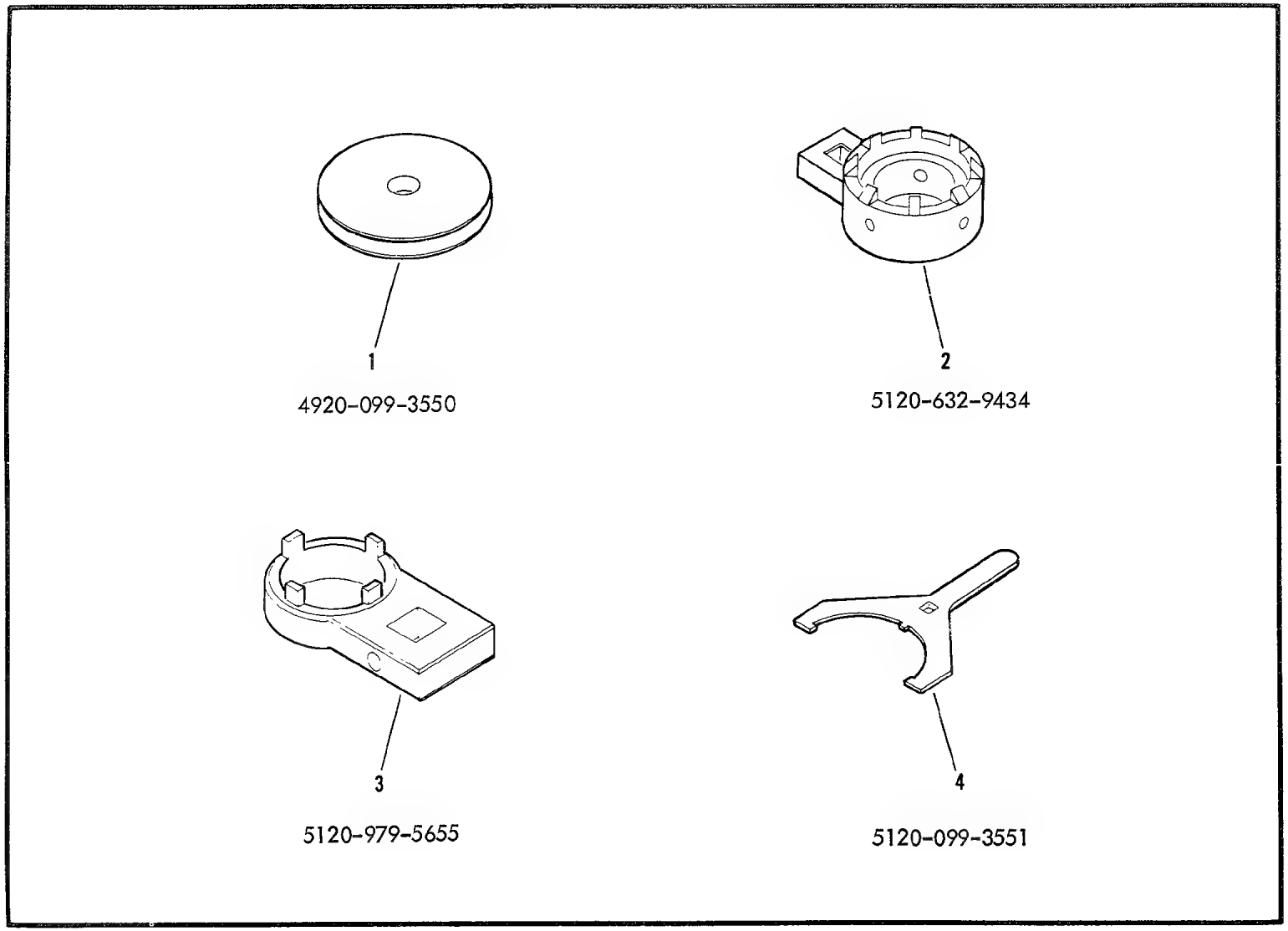

Figure A15. Airframe Tools

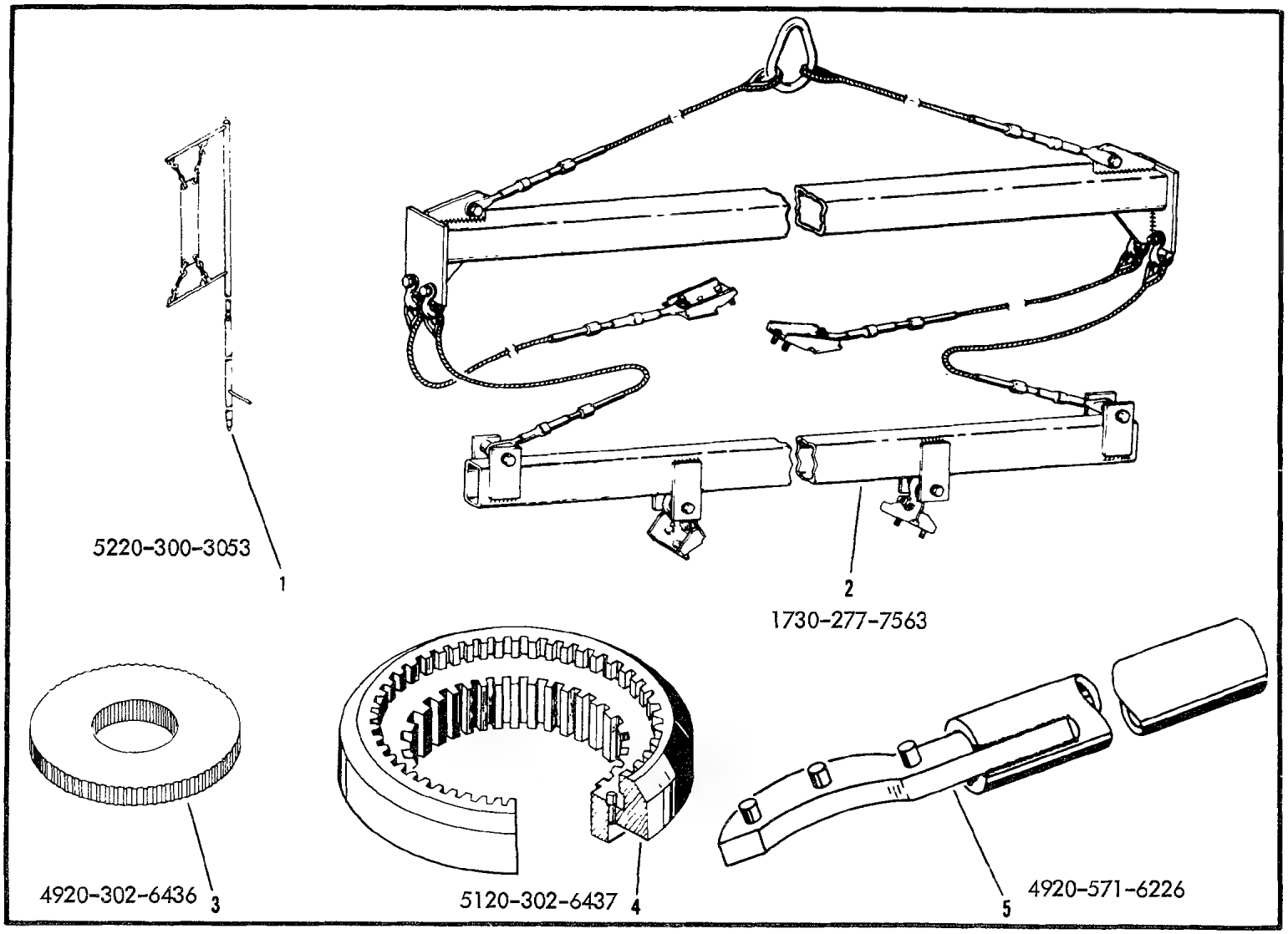

Figure A16. Airframe Tools

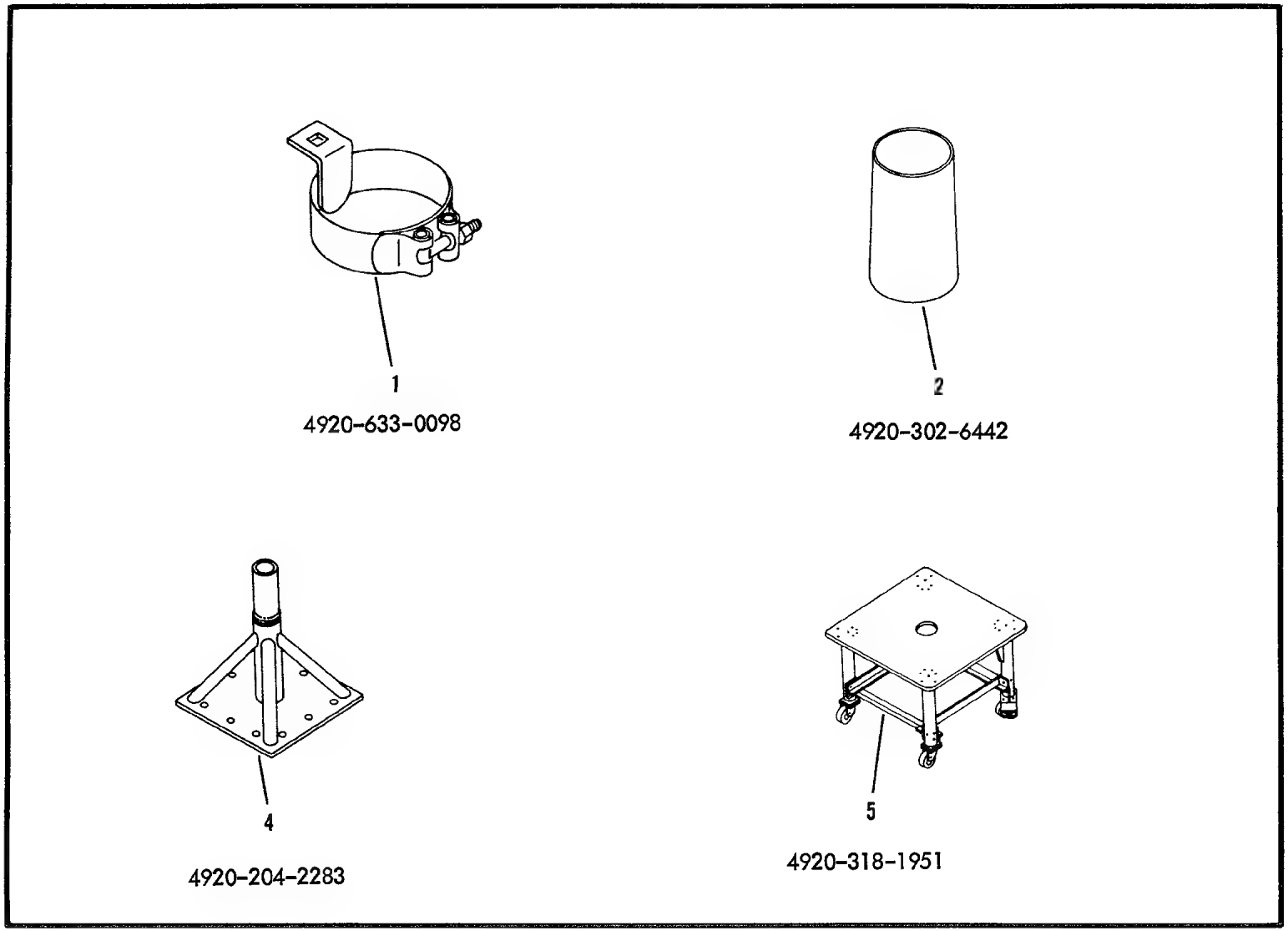

Figure A17. Airframe Tools

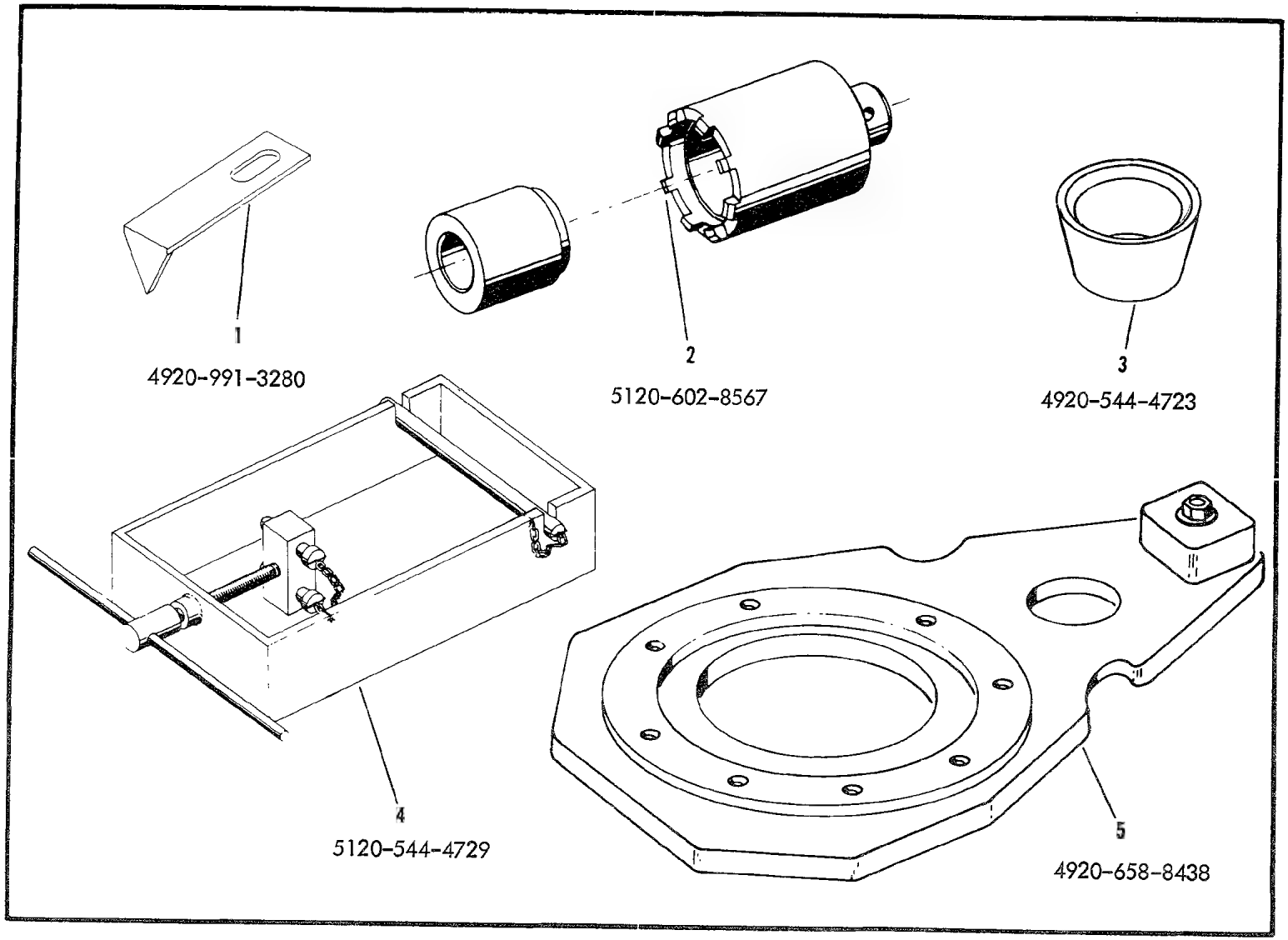

Figure A18. Airframe Tools

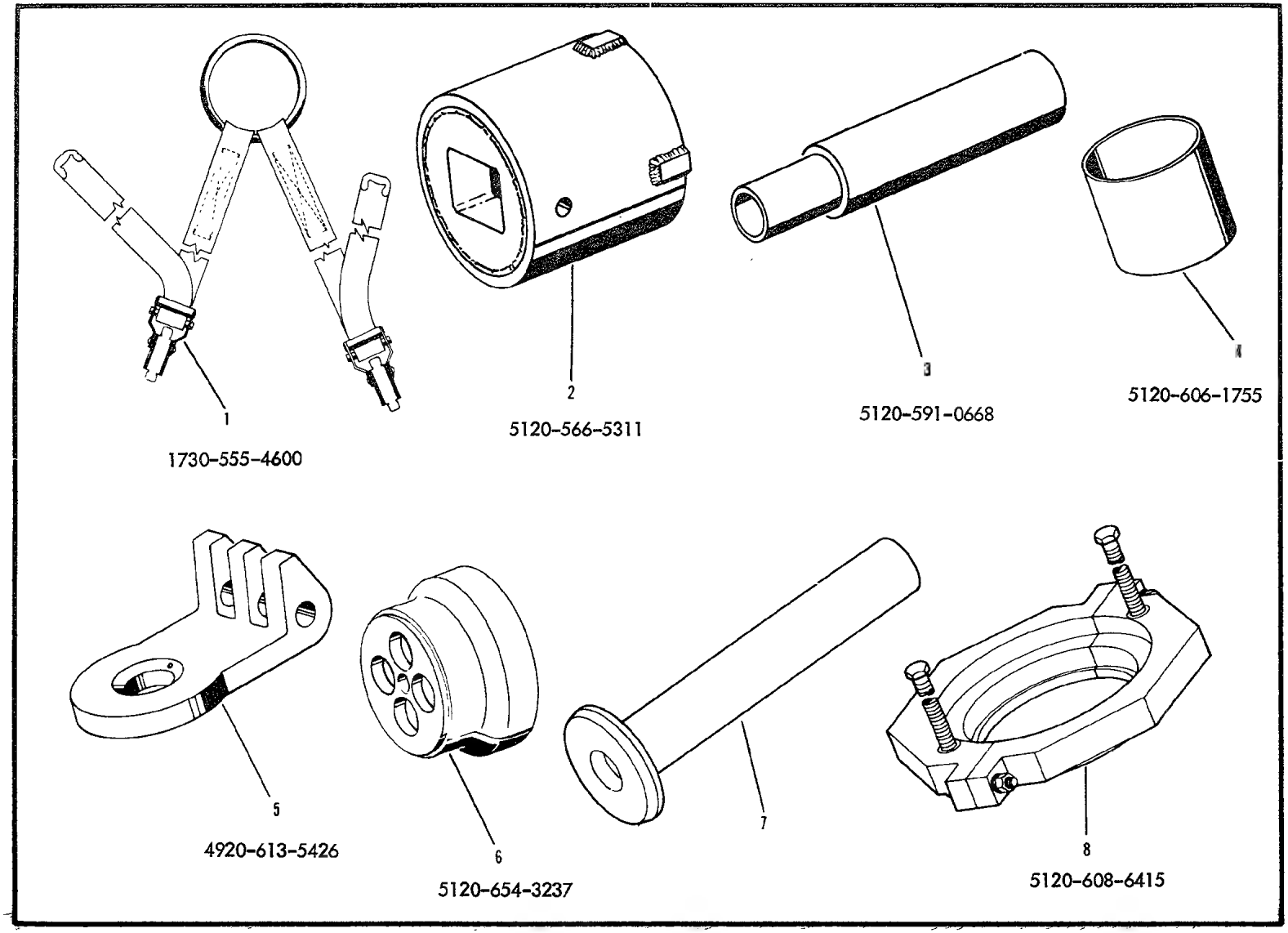

Figure A19. Airframe Tools

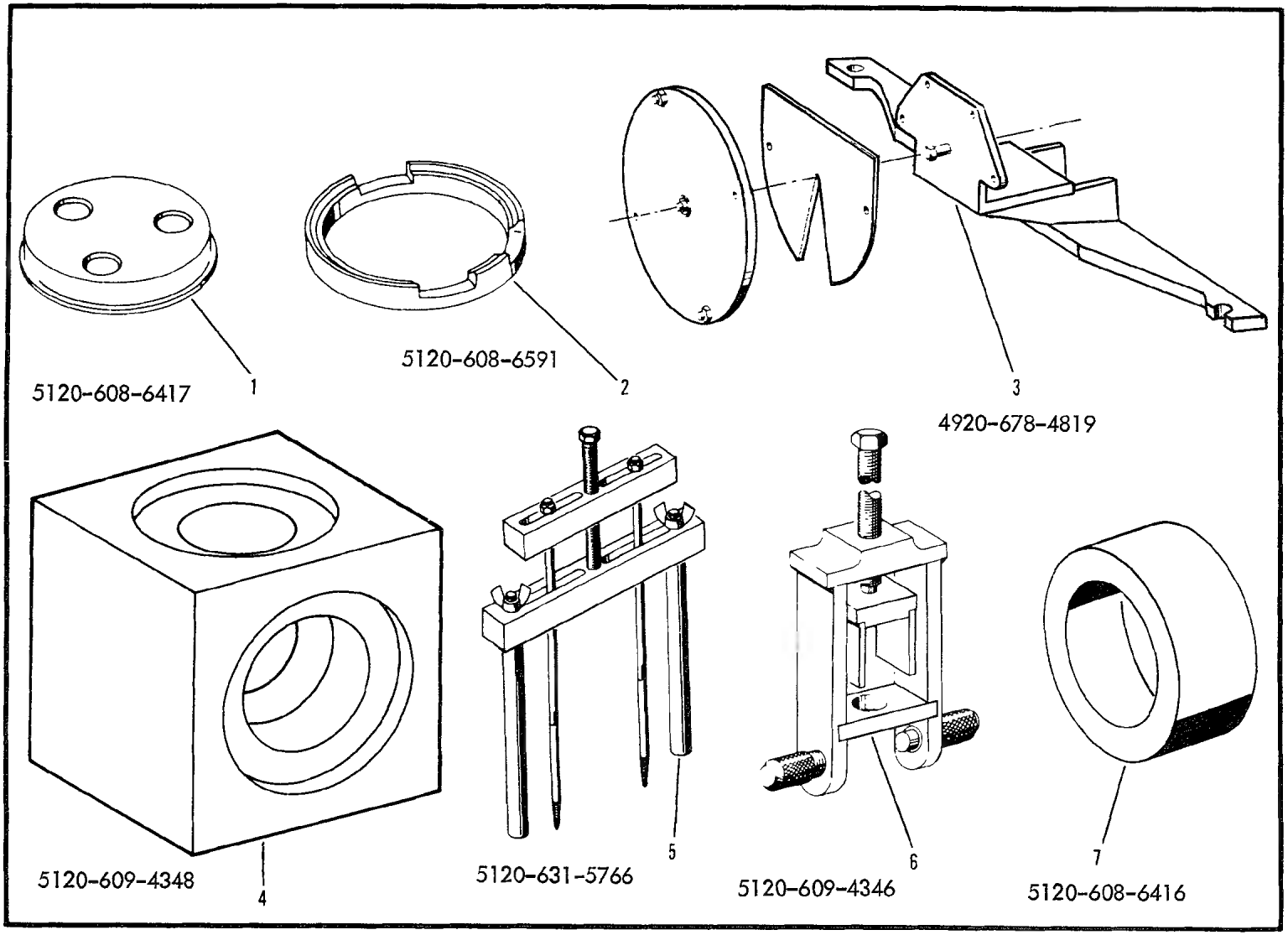

Figure A20. Airframe Tools

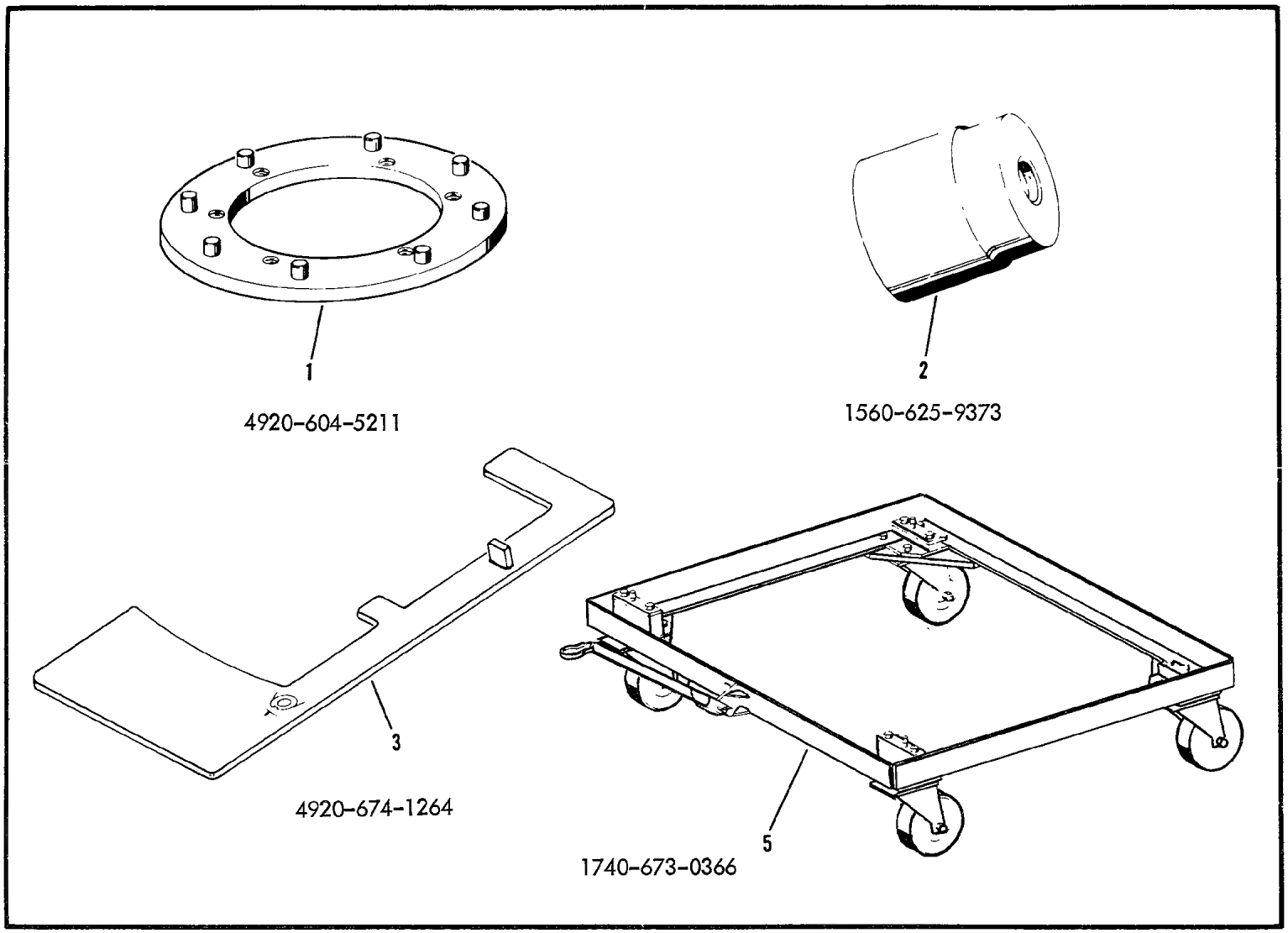

Figure A21. Airframe Tools

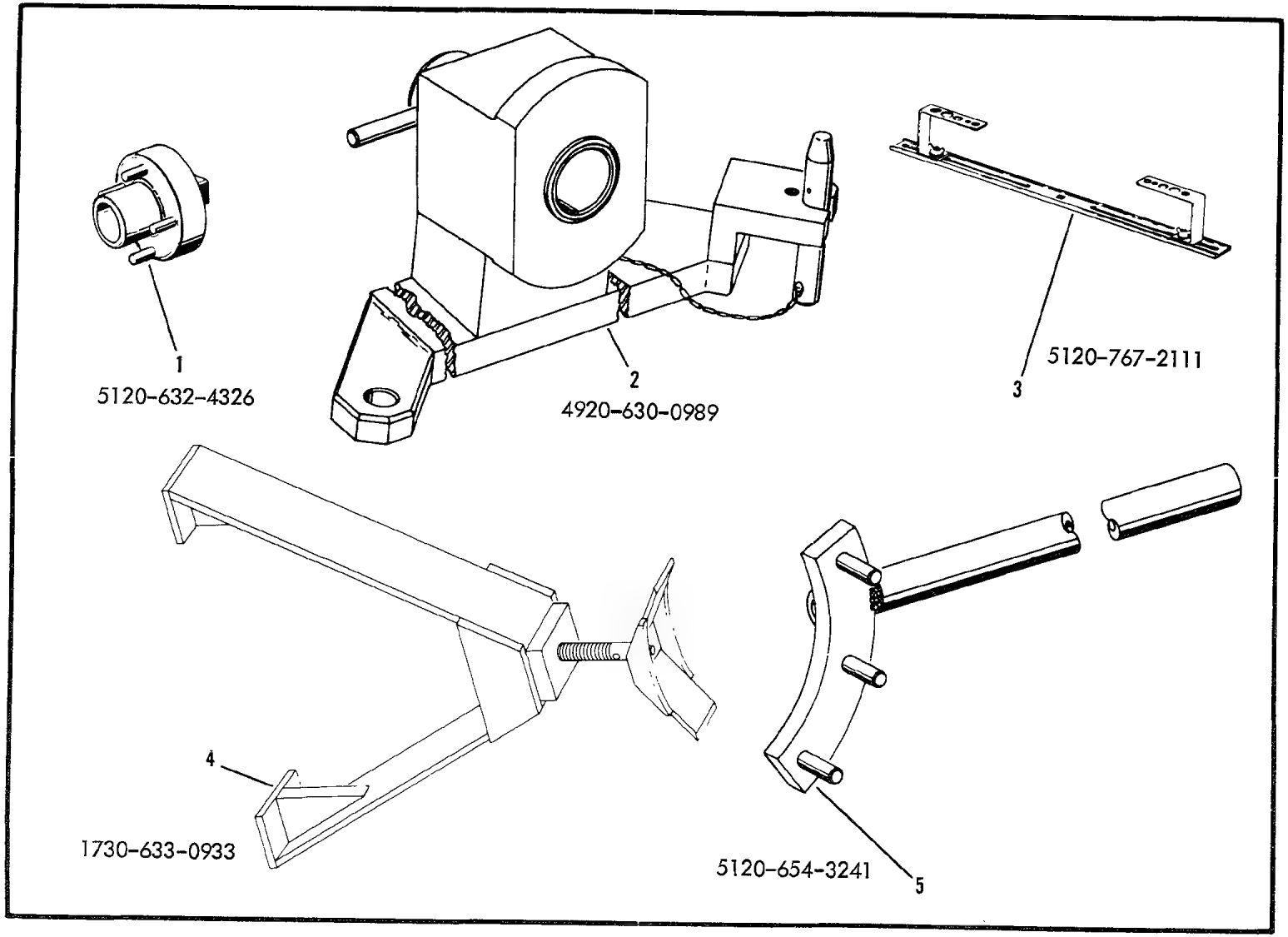

Figure A22. Airframe Tools

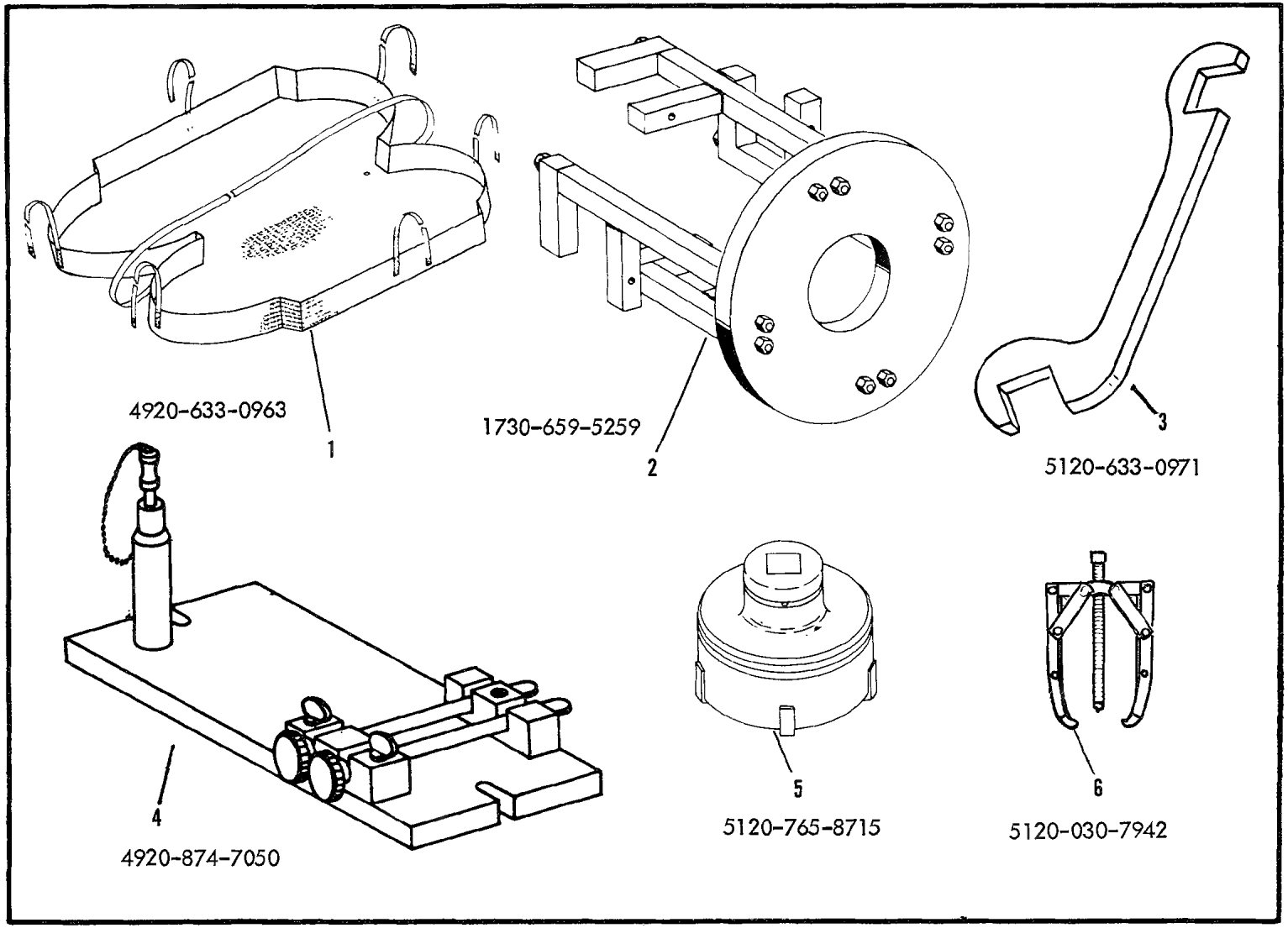

Figure A23. Airframe Tools

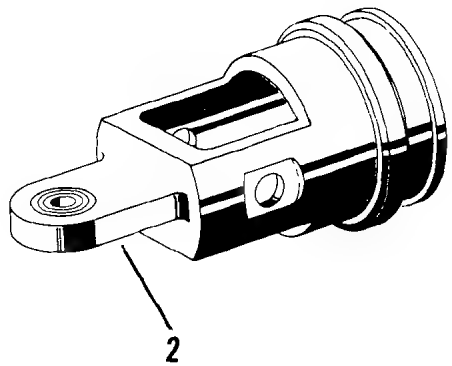

5120-691-1022

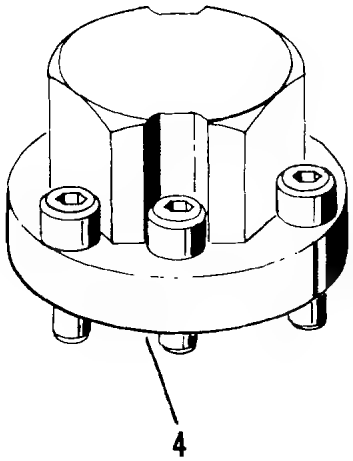

5120-394-5224

Figure A24. Airframe Tools

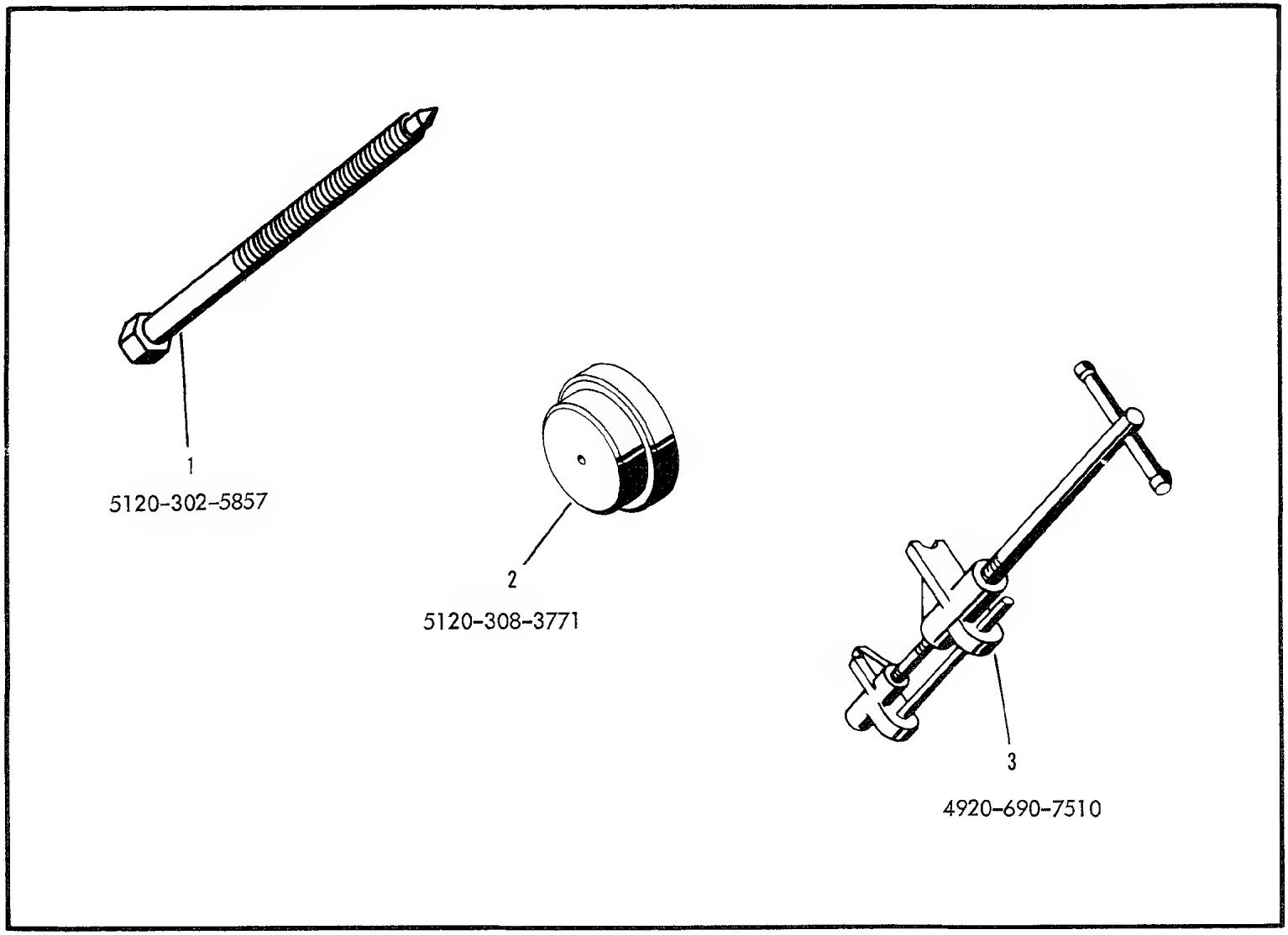

Figure A25. Airframe Tools

SECTION III

FUNCTIONAL GROUP 40

PART 2
ENGINE TOOLS

(1) SOURCE, MAINT AND REC CODE (a) SOURCE CODE	(b) MAINT LEVEL	(c) REC CODE	(2) FEDERAL STOCK NUMBER	REFERENCE NUMBER	(3) DESCRIPTION	MODELS USABLE ON CH-34C	(4) UNIT OF ISSUE	(5) QTY INC IN UNIT PACK	(6) QTY INC IN UNIT	(7) 30-DAY DS/GS MAINT ALW (a) 1-20	(b) 21-50	(c) 51-100	(8) 1-YR ALW PER 100 EQUIP CNTGCY	(9) DEPOT MAINT ALW PER 100 EQUIP	(10) ILLUSTRATION (a) FIG NO	(b) ITEM NO
P	D		1730-142-8105	802836 <66640>	ADAPTER,HOISTING,ENGINE..... ACCESSORIES-BOLTED PLATE TYPE	1	EA		1					1	E5	6
P	F		1730-232-4525	900266 <66640>	SLING,AIRCRAFT MAINTENANCE...	12	EA		1	1	1	1		1	E56	2
P	D		1730-240-8534	803572 <66640>	ADAPTER,HOISTING,AIRCRAFT.... ENGINE ACCESSORIES-THD TYPE,15-1/4 IN.LG,6-1/4 IN. W,6-1/4 IN.H	12	EA		1					1	E1	6
P	D	R	1730-240-8542	806643 <66640>	ADAPTER,HOISTING,AIRCRAFT.... BOLTED PLATE TYPE,21-15/32 IN.LG,7/8 IN.W,18-3/8 IN.H	12	EA		1					1	E71	5
P	D		1730-640-7096	806643 <91547>	SLING,AIRCRAFT.....	1	EA		1					1	E66	6
P	D		2810-091-5734	807487 <66640>	TOOL,INSTALLING.....	1	EA		1					1	E73	2
P	D		2810-168-6422	801206 <66640>	DRIFT-INSERT SEAT EXHAUST....	12	EA		1					8	E33	3
P	D		2810-440-7990	800081 <66640>	HOLDER.....	12	EA		1					1	E38	6
P	F		2810-440-8226	804854 <66640>	PLUG AND BASE-MAGNETO DRIVE..	12	EA		1	1	1	1		1	E6	5
P	D		2810-474-3120	809968 <66640>	FIXTURE-REAR OIL PUMP..... STRAINER,ASSEMBLING & DISASSEMBLING	12	EA		1	1	1	1		1	E24	5
P	D		2925-031-7440	11-3905 <77820>	TIMING DISK,ROTOR LOCK.....	12	EA		1					1	E94	2
P	H		2925-732-8906	10-125921 <77820>	ADAPTER,MAGNETO.....	12	EA		1	*	*	*		1	E93	
P	H		2925-839-8234	10-176161 <77820>	BUSHING,SLEEVE.....	12	EA		1	*	*	*		1	E93	
P	D		3120-682-2409	807653 <66640>	BUSHING.....	12	EA		1					1	E57	
P	D		3455-012-2262	809488 <66640>	CUTTER,MILLING,FACE.....	1	EA		1					1	E57	8
P	D		3455-012-2265	809452 <66640>	CUTTER,EXHAUST VALVE.....	12	EA		1					1	E57	2
P	D		3455-012-2277	809454 <66640>	CUTTER,EXHAUST VALVE.....	12	EA		1					1	E57	
P	D		3455-018-5334	810166 <66640>	REAMER.....	12	EA		1					1	E45	5
P	D		3455-018-5337	810167 <66640>	REAMER.....	12	EA		1					1	E45	
P	D		3455-021-3642	810168 <66640>	REAMER.....	12	EA		1					1	E45	
P	D		3455-033-0527	800154 <66640>	REAMER,MACHINE-H SPEED STEEL, 4-1/4 IN.LG O/A,STRAIGHT SHANK,3/16 IN.DIA,1-1/8 IN. LG	12	EA		1					1	E38	7
P	D		3455-033-4936	808008 <66640>	REAMER,MACHINE.....	12	EA		1					1	E68	3
P	D		3455-037-7292	807611 <66640>	CUTTER,GUIDE,VALVE STEM.....	12	EA		1					1	E74	1
P	D		3455-212-2633	807378 <66640>	CUTTER,EXHAUST VALVE SEAT.... RECESS COUNTERBORE,3.6225 IN.DIA,0.010 IN.OVERSIZE	12	EA		1					2	E15	5
P	D		3455-212-2634	807379 <66640>	CUTTER,EXHAUST VALVE SEAT.... RECESS COUNTERBORE,3.6325 IN.DIA,0.020 IN.OVERSIZE	12	EA		1					2	E15	
P	D		3455-212-2635	807380 <66640>	CUTTER,EXHAUST VALVE SEAT.... RECESS COUNTERBORE,3.6425 IN.DIA,0.030 IN.OVERSIZE	12	EA		1					2	E15	
P	D		3455-212-2636	807381 <66640>	CUTTER,EXHAUST VALVE SEAT.... RECESS COUNTERBORE,3.6525 IN.DIA,0.040 IN.OVERSIZE	12	EA		1					2	E15	
P	D		3455-212-2639	807384 <66640>	CUTTER,MILLING,FACE.....	12	EA		1					2	E15	
P	D		3455-398-2996	805504 <66640>	REAMER,MACHINE.....	12	EA		1					1	E48	7
P	D		3455-398-3046	806346 <66640>	TOOL BIT,SUPERCHARGER-REAR... COVER,STARTER BUSHING HOLE BOSS FACING	12	EA		1					1	E10	5

(1) SOURCE, MAINT AND REC CODE (a) SOURCE CODE	(b) MAINT CATEGORY	(c) REC CODE	(2) FEDERAL STOCK NUMBER	REFERENCE NUMBER	(3) DESCRIPTION	MODELS USABLE ON CH-34C	(4) UNIT OF ISSUE	(5) QTY INC IN UNIT PACK	(6) QTY INC IN UNIT	(7) 30-DAY DS/GS MAINT ALW (a) 1-20	(b) 21-50	(c) 51-100	(8) 1-YR ALW PER 100 EQUIP CNTGCY	(9) DEPOT MAINT ALW PER 100 EQUIP	(10) ILLUSTRATION (a) FIG NO	(b) ITEM NO
P	D		3455-398-3048	806348 <66640>	TOOL BIT,SUPERCHARGER.....	12	EA		1					1	E71	2
P	D		3455-516-3744	82246 <66640>	CUTTER,MILLING END-H SPEED... STEEL,SINGLE END, MULTI-FLUTE,RH,SPIRAL FLUTE,1.418 IN.DIA CUTTER, TAPER SHANK,7-1/2 IN.O/A LG	12	EA		1					1	E87	3
P	D		3455-516-3746	82247 <66640>	CUTTER,MILLING END-H SPEED... STEEL,SINGLE END, MULTI-FLUTE,RH,SPIRAL FLUTE,1.408 IN.DIA CUTTER, TAPER SHANK.7-1/2 IN.O/A LG	12	EA		1					1	E87	
P	D		3455-517-5492	807943 <66640>	REAMER,MACHINE.....	12	EA		1					1	E68	
P	D		3455-528-3379	807920 <66640>	REAMER,SHELL,FLUTED.....	12	EA		1					1	E68	1
P	D		3455-528-3381	805506 <66640>	REAMER,MACHINE,FLUTED..... CHUCKING 0.1345 IN.DIA,9 IN.O/A LG	12	EA		1					1	E70	1
P	D		3455-529-4438	807905 <66640>	REAMER,SHELL,FLUTED.....	12	EA		1					1	E75	3
P	H		3455-571-5703	808406 <66640>	REAMER,TACHOMETER DRIVE.....	12	EA		1	*	*	*		1	E77	1
P	H		3455-571-5704	808407 <66640>	REAMER,MACHINE.....	12	EA		1	*	*	*		1	E65	3
P	H		3455-571-5706	808409 <66640>	REAMER.....	12	EA		1	*	*	*		1	E78	1
P	D		3455-684-3607	809487 <66640>	REAMER,MACHINE.....	12	EA		1					1	E81	2
P	D		3455-684-3748	809486 <66640>	REAMER,MACHINE.....	12	EA		1					1	E39	
P	D		3455-684-3752	809485 <66640>	REAMER,MACHINE.....	12	EA		1					1	E39	5
P	D		3460-012-2285	809613 <66640>	ARBOR,CYLINDER GRINDING.....	1	EA		1					1	E57	3
P	D		3460-033-4588	944893 <72071>	PILOT AND NUT COUNTERBORE....	12	EA		1					1	E41	
P	D		3460-091-5774	807921 <66640>	ARBOR,SHELL REAMER.....	12	EA		1					1	E75	4
P	D		3460-091-5776	807924 <66640>	BAR,HOLE BORING.....	12	EA		1					1	E52	7
P	D		3460-169-7791	805715 <66640>	PILOT,SPARK PLUG INSERT.....	12	EA		1					1	E70	5
P	D		3460-169-7792	805719 <66640>	PILOT,SPARK PLUG INSERT.....	12	EA		1					1	E45	1
P	D		3460-212-3929	11-3464 <77820>	INSTALLING TOOL,LOWER.....	1	EA		1					1	E36	6
P	D		3460-398-3035	806124 <66640>	STONE SET,SUPERCHARGER.....	12	EA		1					1	E66	
P	D		3460-546-8704	808761 <66640>	ARBOR,VALVE TAPPET.....	12	EA		1					1	E79	1
P	D		3460-684-3777	809372 <66640>	BAR,EXHAUST VALVE.....	12	EA		1					1	E80	6
P	D		4920-010-5527	810216 <66640>	SPACER,CLAMPING..... CRANKSHAFT CRANKPIN	12	EA		1					1	E27	4
P	D		4920-010-5528	810174 <66640>	BAR,ALIGNMENT CHECKING..... MASTER ROD,PISTON PIN BUSHING HOLE	12	EA		1					3	E26	4
P	D		4920-010-5529	810215 <66640>	ADAPTER,CENTERING,..... CRANKSHAFT	12	EA		1					1	E27	3
P	D		4920-010-5530	810180 <66640>	FIXTURE,GRINDING,CRANKSHAFT..	12	EA		1					1	E26	5
P	D		4920-010-5531	810304 <66640>	FIXTURE,REMOVING-CAM TO..... BALANCE WEIGHT & OIL SUMP PUMP DRIVE SUPPORT	12	EA		1					1	E27	6
P	D	R	4920-010-5534	808575 <66640>	FIXTURE,CYLINDER EXHAUST..... VALVE SEAT PRESSURE TEST	12	EA		1					1	E47	4
P	D		4920-010-5536	810338 <66640>	HUB AND BLADE ASSEMBLY,WOODEN	12	EA		1					1	E69	
P	D		4920-010-5537	810350 <66640>	HUB AND BLADE ASSEMBLY,WOODEN	12	EA		1					1	E69	
P	D		4920-010-5538	810410 <66640>	FIXTURE,HOLDING,CYLINDER.....	12	EA		1					1	E40	6
P	D		4920-010-5539	810455 <66640>	FIXTURE,SUPERCHARGER.....	12	EA		1					1	E41	
P	D		4920-010-5540	810457 <66640>	FIXTURE,SUPERCHARGER.....	12	EA		1					1	E41	
P	D		4920-012-8939	808581 <66640>	VALVE.....	12	EA		1					1	E46	5

(1) SOURCE, MAINT AND REC CODE (a) SOURCE CODE	(b) MAINT LEVEL	(c) REC CODE	(2) FEDERAL STOCK NUMBER	REFERENCE NUMBER		(3) DESCRIPTION	MODELS USABLE ON CH-34C	(4) UNIT OF ISSUE	(5) QTY INC IN UNIT PACK	(6) QTY INC IN UNIT	(7) 30-DAY DS/GS MAINT ALW (a) 1-20	(b) 21-50	(c) 51-100	(8) 1-YR ALW PER 100 EQUIP CNTGCY	(9) DEPOT MAINT ALW PER 100 EQUIP	(10) ILLUSTRATION (a) FIG NO	(b) ITEM NO
P	D		4920-012-8948	83819D3	<66640>	.BUSHING.....	12	EA		1					1	E88	
P	D		4920-012-8971	82361	<66640>	BAR.....	12	EA		1					1	E68	7
P	D		4920-012-8977	808478	<66640>	ALMEN STRIPS,MASTER ROD..... KNUCKLE PIN HOLES AND CONNECTING ROD AND BEARING SPLINES,SHOT PEEN TESTING	12	EA		1					1	E67	
P	D		4920-012-8983	801930D2	<66640>	CENTER BORE.....	12	EA		1					1	E42	3
P	D		4920-012-8987	808275	<66640>	CUTTER.....	12	EA		1					1	E63	8
P	D		4920-012-8991	810408D2	<66640>	BLOCK,CYLINDER HEAD.....	12	EA		1					1	E58	
P	D		4920-012-8997	810408D3	<66640>	BLOCK,CYLINDER HEAD.....	12	EA		1					1	E58	
P	D		4920-021-4962	810428	<66640>	BUSHING,PILOT REAMING.....	12	EA		1					1	E58	
P	D		4920-033-0723	806867	<66640>	SPACER,SLEEVE.....	12	EA		1					1	E13	3
P	D		4920-033-0724	806868	<66640>	SPACER,IMPELLER SHAFT.....	12	EA		1					1	E13	
P	D		4920-037-3320	808792	<66640>	PUSHER.....	12	EA		1					1	E92	2
P	D		4920-053-3928	810209	<66640>	FIXTURE,COMPRESSOR,IMPELLER.. SHAFT	12	EA		1					1	E27	2
P	F		4920-066-0302	810380	<66640>	GAGE,FUEL PUMP DRIVE.....	12	EA		1	*	*	*		1	E86	
P	F		4920-066-0303	810380D3	<66640>	SETTING RING,FUEL PUMP.....	12	EA		1	*	*	*		1	E86	
P	D		4920-066-0305	810404	<66640>	PULLER,EXHAUST PIPE.....	12	EA		1					1	E86	
P	D		4920-072-9504	803208	<66640>	WRENCH.....	12	EA		1					1	E14	5
X1				803208D1	<66640>	.BUSHING AND PIN.....	12	EA		1						E14	
P	D		4920-072-9505	52480SA	<40266>	STONE AND SHELL ASSEMBLY.....	12	EA		1					1	E95	
P	D		4920-072-9506	807113	<66640>	ADAPTER.....	12	EA		1	*	*	*		1	E63	3
P	D		4920-072-9507	P1444X	<65400>	DRILL-INSERT DOWEL HOLE.....	12	EA		1					1	E93	
P	D		4920-072-9512	807706	<66640>	SUPPORT SHAFT NUT LUG.....	12	EA		1					1	E49	6
P	D		4920-072-9515	809594	<66640>	REAMER.....	12	EA		1					1	E26	6
P	D		4920-072-9516	804228	<66640>	BAR BORING DRIVE GEAR.....	12	EA		1					1	E40	3
P	D		4920-072-9517	809593	<66640>	REAMER.....	12	EA		1					1	E93	
P	D		4920-072-9518	807521	<66640>	PLUG.....	12	EA		1					1	E23	2
P	D		4920-072-9519	809575	<66640>	COUNTERSINK.....	12	EA		1					1	E93	5
P	D		4920-072-9520	60975A	<40266>	BODY MASTER ROD FINISHING....	12	EA		1					1	E95	
P	D		4920-073-3309	809757	<66640>	FIXTURE,CLUTCH CAM.....	12	EA		1					1	E50	4
P	D		4920-073-3310	809758	<66640>	FIXTURE,CLUTCH CAM.....	12	EA		1					1	E50	6
P	D		4920-073-3311	809762	<66640>	FIXTURE GRINDING DRIVE.....	12	EA		1					1	E51	2
P	D		4920-073-3312	809777	<66640>	GAGE,DRIVE GEAR.....	12	EA		1					1	E51	1
P	D		4920-073-3313	809778	<66640>	GAGE,DRIVE SHAFT SETTING.....	12	EA		1					1	E51	3
P	D		4920-073-3314	809783	<66640>	WHEEL,GRINDING,DRIVE SHAFT...	12	EA		1					1	E82	2
P	D		4920-073-3315	810157	<66640>	VALVE,HYDRAULIC.....	12	EA		1					1	E83	
P	D		4920-073-3317	808691	<66640>	ADAPTER.....	12	EA		1					1	E30A	
P	D		4920-073-3318	808785	<66640>	PILOT.....	12	EA		1					1	E94	1
P	D		4920-073-3319	808060	<66640>	FIXTURE.....	12	EA		1					1	E96	5
P	D		4920-073-3321	809481	<66640>	FIXTURE.....	12	EA		1					1	E93	1
P	D	R	4920-073-3322	809562	<66640>	LAP POWER CYLINDER.....	12	EA		1					1	E81	
P	D		4920-073-3323	809754	<66640>	BENCH,CONTROL INDUCTION..... HEATER	12	EA		1					1	E82	1
P	D		4920-073-4440	807538	<66640>	RING,PROPELLER SHAFT.....	12	EA		1					1	E26	7
P	D		4920-073-4441	807830	<66640>	COLLAR BUSHING SUPPORTING....	1	EA		1					1	E46	6
P	D		4920-073-4442	807832	<66640>	BUSHING.....	1	EA		1					1	E47	1
P	D		4920-073-5403	809782	<66640>	ADAPTER,GAGE SETTING.....	12	EA		1					1	E51	4
P	D		4920-073-5413	809296	<66640>	FIXTURE.....	12	EA		1					1	E48	5
P	D		4920-073-5425	808065	<66640>	FIXTURE.....	12	EA		1					1	E39	3
P	D		4920-073-5428	807826	<66640>	FIXTURE.....	12	EA		1					1	E67	4

(1) SOURCE, MAINT AND REC CODE (a) SOURCE CODE	(b) MAINT LEVEL	(c) REC CODE	(2) FEDERAL STOCK NUMBER	REFERENCE NUMBER		(3) DESCRIPTION	MODELS USABLE ON CH-34C	(4) UNIT OF ISSUE	(5) QTY INC IN UNIT PACK	(6) QTY INC IN UNIT	(7) 30-DAY DS GS MAINT ALW (a) 1-20	(b) 21-50	(c) 51-100	(8) 1-YR ALW PER 100 EQUIP CNTGCY	(9) DEPOT MAINT ALW PER 100 EQUIP	(10) ILLUSTRATION (a) FIG NO	(b) ITEM NO
P	D		4920-073-6577	808064	<66640>	FIXTURE	12	EA		1					1	E39	1
P	D		4920-073-6580	805190	<66640>	FIXTURE,DRIVE SUPPORT	12	EA		1					1	E48	
P	D		4920-073-9775	807911	<66640>	FIXTURE,HOLDING	12	EA		1					1	E53	4
P	D		4920-073-9776	807912	<66640>	ADAPTER,STARTER COVER	12	EA		1					1	E53	5
P	D		4920-073-9777	807918	<66640>	PLUG BUSHING INSTALLING	12	EA		1					1	E53	2
P	D		4920-073-9778	807919	<66640>	FIXTURE,ARBOR	12	EA		1					1	E54	1
P	D		4920-073-9781	807949	<66640>	ADAPTER,SUPERCHARGER	12	EA		1					1	E55	1
P	D		4920-073-9784	807953	<66640>	ADAPTER,SUPERCHARGER	12	EA		1					1	E55	3
P	D		4920-073-9785	807955	<66640>	ADAPTER,SUPERCHARGER	12	EA		1					1	E55	4
P	D		4920-073-9795	807944	<66640>	JIG,SUPERCHARGER	12	EA		1					1	E54	5
P	D		4920-074-1183	810155	<66640>	VALVE,DUMMY CYLINDER	12	EA		1					1	E48	2
P	D		4920-074-1957	810372	<66640>	JIG,CRANKCASE MAIN	12	EA		1					1	E57	5
P	D		4920-091-5729	805092	<66640>	GUIDE,EXHAUST VALVE DUMMY 0.9717 IN.DIA	1	EA		1					1	E7	4
P	D		4920-091-5747	807566	<66640>	FIXTURE	1	EA		1					1	E16	2
P	D		4920-091-5751	807602	<66640>	GUIDE-EXHAUST VALVE DUMMY, 1.0668 IN.DIA,2-5/8 IN.LG	12	EA		1					1	E16	4
P	D		4920-091-5768	807034	<66640>	FIXTURE,ROCKER ARM BUSHING	12	EA		1					1	E72	
P	D		4920-091-6755	11-3791	<77820>	TEMPLATE,CENTERING-MAGNETO DISTRIBUTOR CONTACTS	1	EA		1					1	E31	2
P	D		4920-099-8267	923208	<66640>	PLATE	2	EA		1					1	E91	2
P	D		4920-142-3924	T25037	<06848>	CLAMP,REGULATOR STEM BUSHING LOCK	1	EA		1					1	E28	5
P	D	R	4920-143-7888	800065	<66640>	FIXTURE,SPINNING	12	EA		1					1	E32	3
P	D		4920-143-8001	801530	<66640>	ADAPTER,HONING FIXTURE	12	EA		1					1	E34	2
P	D		4920-143-8026	801789	<66640>	PROTECTOR,MAIN SECTION	12	EA		1					1	E34	6
P	D		4920-143-8038	801864	<66640>	STOP,CRANKSHAFT FRONT	12	EA		1					1	E35	1
P	D		4920-143-8039	801890	<66640>	PLUG,DRIVING,PISTON PIN	12	EA		1					3	E35	2
P	D		4920-143-8040	801892	<66640>	COLLARS,GUIDE PISTON PIN	12	EA		1					12	E35	3
P	D		4920-143-8048	801928	<66640>	PILOT AND NUT,COUNTERBORE	12	EA		1					1	E35	4
P	D		4920-143-8089	83413	<66640>	GUIDE,PISTON PIN BUSHING	2	EA		1					1	E87	9
P	D		4920-144-2619	83409	<66640>	BASE,SUPPORT,ARBOR	2	EA		1					1	E87	8
P	D		4920-144-2620	83415	<66640>	COLLAR,LOCATING-KNUCKLE PIN SPINNING	2	EA		1					1	E88	7
P	D		4920-144-2621	83417	<66640>	COLLAR,LOCATING-KNUCKLE PIN FACING	2	EA		1					1	E88	1
P	D		4920-144-2632	83560	<66640>	BAR,HOLE ALIGNMENT-MASTER ROD KNUCKLE PIN HOLE,U/W 4920-859-8048	12	EA		1					1	E88	3
P	D		4920-144-2649	83819	<66640>	FIXTURE,HONING,MASTER ROD	12	EA		1					1	E88	4
P	D		4920-144-2672	84294	<66640>	FIXTURE,HONING,SUPERCHARGER	2	EA		1					1	E89	1
P	F		4920-144-5054	802100	<66640>	FIXTURE,LAPPING ACCESSORY DRIVE & STARTER	12	EA		1	1	1	1		2	E35	7
P	F		4920-144-5085	802177	<66640>	SCREW,CYLINDER TO CRANKCASE STEEL,HEX HEAD,1/2 IN.-20 NF		EA		1	1	1	1		1	E36	3
P	D		4920-144-5086	802158	<66640>	PLUG AND COLLAR,DRIVING	12	EA		1					1	E36	2
P	D		4920-144-5268	803047	<66640>	PLUG AND COLLAR,DRIVING	12	EA		1					1	E38	3
P	D		4920-144-5277	803124	<66640>	SUPPORT,DRIVER-CRANKSHAFT	12	EA		1					1	E38	5
			4920-144-5365	803830	<66640>	COVER,PROTECTING,INTAKE	12	EA		1						E3	

(1) SOURCE, MAINT AND REC CODE (a) SOURCE CODE	(b) MAINT LEVEL	(c) REC CODE	(2) FEDERAL STOCK NUMBER	REFERENCE NUMBER	(3) DESCRIPTION	MODELS USABLE ON CH-34C	(4) UNIT OF ISSUE	(5) QTY INC IN UNIT PACK	(6) QTY INC IN UNIT	(7) 30-DAY DS/GS MAINT ALW (a) 1-20	(b) 21-50	(c) 51-100	(8) 1-YR ALWPER 100 EQUIP CNTGCY	(9) DEPOT MAINT ALWPER 100 EQUIP	(10) ILLUSTRATION (a) FIG NO	(b) ITEM NO
					CONTINUED										E3	
					PIPE USE UNTIL EXHAUSTED, NO REPLACEMENT											
P	D		4920-144-5406	802929 <66640>	FIXTURE COUNTERBORE MAST.....	12	EA		1					1	E95	
P	D		4920-144-5529	803675 <66640>	DRIVE,SPARK PLUG INSERT.....	12	EA		1					1	E2	1
P	D		4920-144-5530	803679 <66640>	FIXTURE,REAMING-REAR..... CRANKSHAFT	12	EA		1					1	E2	3
P	D		4920-144-5561	803793 <66640>	PLUG,DRIVING,PROPELLER.....	12	EA		1					1	E3	2
P	D		4920-144-5626	804087 <66640>	SPACER,FRONT AND REAR.....	12	EA		1					1	E4	4
P	D		4920-144-5627	804088 <66640>	COLLAR,FRONT AND REAR.....	12	EA		1					1	E4	5
P	D		4920-144-5651	804366 <66640>	PLUG-SLEEVE REMOVING.....	12	EA		1					1	E50	1
P	D		4920-144-5770	81323 <66640>	JIG,DRILL,SPARK PLUG.....	12	EA		1					1	E69	3
P	D		4920-144-5870	84246 <66640>	SPACER,FIXTURE,MASTER ROTOR..									1	E88	5
P	H		4920-144-5945	11-1248 <77820>	BLOCK,DRESSING,CONTACT..... POINT U/O 2925-294-2596	1	EA		1	1	1	1		2	E30	2
P	D		4920-168-4683	800091 <66640>	PLUG,IMPELLER SHAFT FRONT....	1	EA		1					2	E32	7
P	D		4920-212-2524	803981 <15555>	PLUG,CAM AND OIL SUMP.....	12	EA		1					1	E3	4
P	D		4920-212-2578	806767 <66640>	BUSHING AND COLLAR..... SUPERCHARGER REAR HOUSING DRAIN VALVE	1	EA		1					1	E12	
P	D		4920-212-2579	806806 <66640>	ALIGNING TOOL.....	12	EA		1					1	E49	5
P	D		4920-212-2580	806863 <66640>	PLUG,IMPELLER SHAFT-FRONT.... BUSHING REMOVING	12	EA		1					1	E13	1
P	H		4920-212-2668	923276 <66640>	PLUG,TACHOMETER DRIVESHAFT...	2	EA		1					1	E92	1
P	D		4920-213-9399	803790 <66640>	FIXTURE,ARTICULATING ROD.....	12	EA		1					1	E3	1
P	D		4920-213-9400	803982 <66640>	JIG,CAM AND OIL SUMP DRIVE...	12	EA		1					1	E4	1
P	D		4920-213-9415	806891 <66640>	FIXTURE,MAIN BEARING.....	12	EA		1					1	E43	4
P	D		4920-215-2321	806864 <66640>	PLUG,IMPELLER SHAFT-REAR..... BUSHING REMOVING	12	EA		1					3	E13	2
P	D		4920-215-2323	807007 <66640>	ALIGNING TOOL,INSTALLING..... IMPELLER SHAFT	12	EA		1					3	E14	2
P	D		4920-215-2326	807064 <66640>	HOLDING TOOL,CRANKSHAFT.....	12	EA		1					1	E72	4
P	D		4920-215-2327	807103 <66640>	ADAPTER,CRANKCASE MAIN..... TRANSMISSION	12	EA		1					1	E14	4
P	D		4920-215-2328	807115 <66640>	PLUG AND COLLAR ACCESSORY....	12	EA		1					1	E50	3
P	F		4920-216-7053	SWE8673W <87641>	SOCKET-SHORT PROPELLER.....		EA		1	1	1	1		1	E28	3
P	F		4920-305-4956	SWE8473W <87641>	PLATE,ANCHOR.....		EA		1	1	1	1		1	E28	
P	D		4920-306-5172	804599 <66640>	BAR,CAM AND BALANCE WEIGHT...	12	EA		1					1	E96	1
P	D	R	4920-313-7423	807131 <66640>	BUSHING,HONING BAR.....	12	EA		1					1	E14	7
P	O		4920-319-4331	807788 <66640>	GAGE,EXHAUST VALVE-REGRIND... LIMITS	12	EA		1	*	*	*		3	E17	
P	D		4920-336-0283	808378 <66640>	FIXTURE,MASTER ROD.....	12	EA		1					1	E18	6
P	D		4920-336-0284	808474 <66640>	HOLDER,ALMEN TEST STRIP.....	12	EA		1					1	E19	3
P	D		4920-336-0285	808477 <66640>	TURNTABLE UNIT-MASTER ROD,... KNUCKLE PIN HOLES, CONNECTING ROD & BEARING SPLINES SHOT PEENING	12	EA		1					1	E19	5
P	D		4920-337-9928	804749 <66640>	COLLAR-IMPELLER SHAFT..... BUSHING,1-27/32 IN.ID,4 IN. OD,3/4 IN.THK	12	EA		1					3	E6	3
P	D		4920-337-9929	805124 <66640>	LOCKING TOOL,IMPELLER SHAFT..	12	EA		1					1	E7	5

(1) SOURCE, MAINT AND REC CODE (a) SOURCE CODE	(b) MAINT LEVEL	(c) REC CODE	(2) FEDERAL STOCK NUMBER	REFERENCE NUMBER		(3) DESCRIPTION	MODELS USABLE ON CH-34C	(4) UNIT OF ISSUE	(5) QTY INC IN UNIT PACK	(6) QTY INC IN UNIT	(7) 30-DAY DS/GS MAINT ALW (a) 1-20	(b) 21-50	(c) 51-100	(8) 1-YR ALWPER 100 EQUIP CNTGCY	(9) DEPOT MAINT ALWPER 100 EQUIP	(10) ILLUSTRATION (a) FIG NO	(b) ITEM NO
		R	4920-337-9930	805304	<66640>	ARBOR,IMPELLER STATIC..... BALANCING RPL-BY 4920-623-5954 COMPONENT OF SHOP SETS 4920-321-9440 & 4920-649-6509	12									E7	
P	D		4920-337-9931	805709	<66640>	HOLDER,ROCKER HUB BOLT..... BUSHING	12	EA		1					1	E8	3
P	D		4920-337-9932	805711	<66640>	COLLAR,ROCKER HUB BOLT..... BUSHING	12	EA		1					1	E8	4
P	D		4920-337-9935	805787	<66640>	ARBOR,IMPELLER.....	12	EA		1					1	E9	3
P	D		4920-337-9938	808428	<66640>	ARBOR,INSTALLING-EXHAUST..... VALVE GUIDE	12	EA		1					1	E19	2
P	D	R	4920-337-9939	806149	<66640>	ADAPTER,INTAKE AND EXHAUST... VALVE GUIDE INSTALLING	1	EA		1					1	E10	1
P	F		4920-343-0891	803526-1	<66640>	BUSHING,STUD INSTALLING..... CARBURETOR ADAPTER TO SUPERCHARGER,REAR HOUSING ATTACHING STUD,INSTALLING, 0.003 IN.OVERSIZE	12	EA		1	*	*	*		*	E1	
P	F		4920-343-0892	803526-2	<66640>	BUSHING,STUD INSTALLING..... CARBURETOR ADAPTER TO SUPERCHARGER,REAR HOUSING ATTACHING STUD,INSTALLING, 0.007 IN.OVERSIZE	12	EA		1	*	*	*		*	E1	
P	F		4920-343-0893	803526-3	<66640>	BUSHING,STUD INSTALLING..... CARBURETOR ADAPTER TO SUPERCHARGER,REAR HOUSING ATTACHING STUD,INSTALLING, 0.012 IN.OVERSIZE	12	EA		1	*	*	*		*	E1	
P	D		4920-388-9277	803094	<66640>	HOLDER,HEATING,CYLINDER.....	12	EA		1					1	E38	4
P	F		4920-395-8347	803759	<66640>	JIG,CARBURETOR ADAPTER TO.... SUPERCHARGER	12	EA		1	1	1	1		1	E2	6
P	D		4920-398-3008	805692	<66640>	GUIDE,EXHAUST VALVE DUMMY.... 1.0168 IN.DIA	12	EA		1					1	E8	1
P	D		4920-398-3009	805693	<66640>	GUIDE,EXHAUST VALVE DUMMY.... 1.0268 IN.DIA	12	EA		1					1	E8	2
P	D		4920-398-3010	805695	<66640>	GUIDE,EXHAUST VALVE DUMMY.... 1.0368 IN.DIA	12	EA		1					1	E8	
P	D		4920-398-3054	806392	<66640>	SUPPORT,EXHAUST VALVE.....	1	EA		1					1	E56	4
P	D		4920-398-3080	806598	<66640>	FIXTURE,CYLINDER-BORE.....	12	EA		1					1	E11	5
X1				806598D9	<66640>	.GUIDE.....	12	EA		1						E11	
X1				806598D21	<66640>	.CLAMP.....	12	EA		1						E11	
P	D		4920-398-3090	806624	<66640>	DRILLING JIG,ROCKER ARM..... ROLLER PIN REMOVING	1	EA		1					2	E11	7
			4920-398-3096	806699	<66640>	HOLDER-EXHAUST & INTAKE VALVE USE UNTIL EXHAUSTED,NO REPLACEMENT	12	EA		1						E12	
P	F		4920-398-3118	806915	<66640>	PROTECTOR,MASTER ROD CYLINDER	12	EA		AR	1	1	1		1	E13	6
P	D		4920-398-3184	923136	<66640>	FIXTURE,IMPELLER DRIVE GEAR..	12	EA		1					1	E90	9
P	D		4920-439-8878	810185	<66640>	INSULATOR-CRANKSHAFT FRONT... END,NITRIDING	12	EA		1					1	E27	1
P	D	R	4920-440-7991	800082	<66640>	HOLDER,MASTER ROD.....	12	EA		1					1	E32	6

(1) SOURCE, MAINT AND REC CODE (a) SOURCE CODE	(b) MAINT LEVEL	(c) REC CODE	(2) FEDERAL STOCK NUMBER	REFERENCE NUMBER	(3) DESCRIPTION	MODELS USABLE ON CH-34C	(4) UNIT OF ISSUE	(5) QTY INC IN UNIT PACK	(6) QTY INC IN UNIT	(7) 30-DAY DS/GS MAINT ALW (a) 1-20	(b) 21-50	(c) 51-100	(8) 1-YR ALW PER 100 EQUIP ONTGCY	(9) DEPOT MAINT ALW PER 100 EQUIP	(10) ILLUSTRATION (a) FIG NO	(b) ITEM NO
					CONTINUED										E32	6
					CRANKSHAFT BEARING HOME STONE											
P	D		4920-440-7997	800207 <66640>	STAND, INTAKE AND EXHAUST.....	1	EA		1					*	E34	
					VALVE SEAT REMOVING											
P	F		4920-440-8025	801719 <66640>	INSTALLING TOOL-FUEL PUMP....	12	EA		1	1	1	1		1	E34	4
					DRIVE SHAFT OIL SEAL											
P	D		4920-440-8215	804791 <66640>	FIXTURE-OIL SUMP SCAVENGE....	12	EA		1					1	E6	4
					PUMP											
P	D		4920-440-8237	804965 <66640>	COLLAR-CAM OR GEAR SUMP.....	12	EA		1					1	E7	1
					BUSHING, BORING & FACING, 1.196 IN.ID, 2-1/2 IN.OD, 1/2 IN.THK											
P	D		4920-440-8358	805583 <66640>	TOOL, BIT.....	12	EA		1					1	E7	6
P	D		4920-440-8662	806376 <66640>	BOLT-MULTI-PURPOSE.....	12	EA		1					1	E11	1
					HYDRAULIC PULLER											
P	D		4920-440-8672	806395 <66640>	BUSHING.....	1	EA		1					1	E56	5
P	H		4920-442-1060	11-2601 <77820>	FIXTURE, ASSEMBLY CONTACT.....	1	EA		1	*	*	*		2	E30	4
					BREAKERS U/D 2925-294-2596											
P	F		4920-490-6953	801243 <66640>	BUSHING-CARBURETOR ADAPTER...	12	EA		1	1	1	1		1	E34	1
					TO SUPERCHARGER, REAR HOUSING ATTACHING STUD, REMOVING											
P	D		4920-490-6956	802112 <66640>	PLUG-CYLINDER SPARK PLUG HOLE	12	EA		1					18	E36	1
P	D		4920-490-7001	804051 <66640>	HOLDER-VALVE STEM POLISHING..	12	EA		1					1	E4	3
X1				804051D2 <66640>	.HOLDER, VALVE STEM.....	12	EA		1						E4	
			4920-490-7012	804351 <66640>	COVER, CYLINDER INTAKE PORT...	1	EA		1						E5	
					USE UNTIL EXHAUSTED, NO REPLACEMENT											
P	F		4920-490-7018	804640 <66640>	DRILLING JIG-MISCELLANEOUS...	12	EA		AR	1	1	1		1	E6	1
					STUD REMOVING											
X1				804640D1 <66640>	.LING, STUD REMOVER.....	12	EA		1						E6	
X1				804640-9 <66640>	.BUSHING, DRILL JIG.....	12	EA		1						E6	
P	D		4920-490-7046	805596 <66640>	JIG, PUSH.....	12	EA		1					1	E7	7
P	D		4920-490-7064	805724 <66640>	BUSHING, SPARK PLUG INSERT....	12	EA		1					1	E8	5
					0.040 IN.OVERSIZE											
P	D		4920-490-7067	805729 <66640>	HOLDER, COUNTERBORE AND.....	12	EA		1					1	E70	
					COUNTERSINK											
P	D		4920-490-7075	805786 <66640>	FIXTURE, CYLINDER.....	12	EA		1					1	E9	2
					RECONDITIONING DRILL											
P	D		4920-490-7101	805913 <66640>	HOLDER, PISTON PIN BUSHING....	1	EA		1					1	E9	6
P	D		4920-490-7111	806263 <66640>	FIXTURE, LATHE LOCATING.....	1	EA		1					1	E10	3
P	D		4920-490-7112	806264 <66640>	FIXTURE, WEDGE TYPE PISTON....	1	EA		1					1	E10	4
P	D		4920-490-7123	806347 <66640>	HOLDER, SUPERCHARGER TOOL.....	12	EA		1					1	E10	6
					BIT-REAR COVER BUSHING HOLE, BORING BAR FACING & CHAMFERING											
P	D	R	4920-490-7192	806623 <66640>	FIXTURE-ROCKER ARM ROLLER....	12	EA		1					1	E11	6
					PIN PEENING, HYDRAULIC PRESS											
P	D	R	4920-490-7208	806764 <66640>	HOLDING FIXTURE-ACCESSORY....	1	EA		1					1	E12	4
					DRIVE GEAR SPRINGS & PINS											
P	D	R	4920-490-7209	806765 <66640>	BUSHING-SUPERCHARGER REAR....	1	EA		1					1	E12	5

(1) SOURCE, MAINT AND REC CODE (a) SOURCE CODE	(b) MAINT LEVEL	(c) REC CODE	(2) FEDERAL STOCK NUMBER	REFERENCE NUMBER	(3) DESCRIPTION	MODELS USABLE ON CH-34C	(4) UNIT OF ISSUE	(5) QTY INC IN UNIT PACK	(6) QTY INC IN UNIT	(7) 30-DAY DS/GS MAINT ALW (a) 1-20	(b) 21-50	(c) 51-100	(8) 1-YR ALW PER 100 EQUIP CNTGCY	(9) DEPOT MAINT ALW PER 100 EQUIP	(10) ILLUSTRATION (a) FIG NO	(b) ITEM NO
					CONTINUED										E12	5
					HOUSING DRAIN VALVE TUBE REMOVING											
P	D	R	4920-490-7210	806766 <66640>	BUSHING AND COLLAR.....	12	EA		1					1	E12	
					SUPERCHARGER REAR HOUSING DRAIN VALVE											
P	D		4920-490-7254	923053 <66640>	PULLER AND HOIST.....	12	EA		1					*	E89	4
P	D		4920-490-7268	923129 <66640>	BUSHING-IMPELLER DRIVE GEAR..	12	EA		1					1	E90	8
					SHAFT,FRONT BUSHING JIG STARTING DRILL											
P	D		4920-490-7269	923130 <66640>	BUSHING.....	12	EA		1					1	E90	
P	D		4920-490-7270	923131 <66640>	BUSHING.....	12	EA		1					1	E90	
P	D		4920-490-7302	923214 <66640>	PROTECTOR.....	2	EA		1					1	E91	3
P	D		4920-497-7682	805093 <66640>	GUIDE,EXHAUST VALVE DUMMY....	1	EA		1					1	E7	
					0.9768 IN.DIA,0.040 IN. OVERSIZE											
P	D		4920-522-1635	807777 <66640>	COVER,CRANKCASE,FRONT SECTION	12	EA		1					1	E29	7
P	D	R	4920-534-0779	806747 <66640>	STAND-ASSEMBLING &.....	12	EA		1					1	E12	3
					DISASSEMBLING,CRANKSHAFT											
P	D		4920-535-1748	805726 <66640>	PILOT AND NUT-SPARK PLUG.....	12	EA		1					1	E8	6
P	D		4920-544-1095	805003 <66640>	PULLER.....	12	EA		1					1	E7	
P	F		4920-544-1119	923604 <66640>	WRENCH,PROPELLER SHAFT-SAE...	2	EA		1	*	*	*		1	E92	5
					NO.51											
P	D		4920-544-5410	808888 <66640>	FIXTURE.....	12	EA		1					1	E67	5
P	D		4920-546-8706	808763 <66640>	CHART-COMPARATOR,VALVE.....	1	EA		1					1	E20	7
					TAPPET ROLLER											
P	D	R	4920-563-0873	807665 <66640>	GAGE,MASTER ROD KNUCKLE.....	12	EA		1					1	E16	
P	D		4920-564-6653	808323 <66640>	COLLET,KNUCKLE PIN.....	12	EA		1					1	E18	5
P	D		4920-568-0476	807789 <66640>	STUD,CRANKCASE FRONT.....	12	EA		1					1	E17	
					SECTION											
P	H		4920-571-5707	808410 <66640>	JIG,TACHOMETER DRIVE.....	12	EA		1	*	*	*		1	E19	1
P	D		4920-571-5743	808877 <66640>	COLLAR,IMPELLER ROLLER.....	12	EA		1					1	E21	1
P	D		4920-571-6263	808884 <66640>	PLUG,IMPELLER DRIVE GEAR.....	12	EA		1					1	E21	2
P	D		4920-572-7219	808891 <66640>	PLUG,IMPELLER DRIVE GEAR.....	12	EA		1					1	E21	3
P	D		4920-573-7122	808904 <66640>	PLUG,ARBOR,PRESS.....	12	EA		1					1	E21	4
P	D		4920-573-8370	808670 <66640>	PILOT AND BUSHING-SPARK.....	1	EA		1					1	E20	3
					PLUG INSERT,SPOT FACING											
P	D		4920-573-8371	808671 <66640>	CUTTER.....	1	EA		1					1	E20	4
P	D		4920-574-7430	808906 <66640>	BASE,PROPELLER SHAFT FRONT...	12	EA		1					1	E21	6
P	D		4920-591-2429	808999 <66640>	FIXTURE,CYLINDER BARREL.....	12	EA		1					1	E80	
P	D		4920-600-3412	810365 <66640>	JAWS,ACCESSORIES DRIVE.....	12	EA		1					1	E41	1
P	D	R	4920-605-1935	808475 <66640>	BRACKET,MASTER ROD KNUCKLE...	12	EA		1					1	E19	4
					PIN HOLES											
P	D		4920-605-3972	808617 <66640>	FIXTURE.....	12	EA		1					1	E20	2
P	D		4920-628-4267	807913 <66640>	HOLDING,SUPERCHARGER REAR....	12	EA		1					1	E67	
P	D	R	4920-628-8231	11510 <77220>	INSTALLING TOOL-PISTON RING..	12	EA		1	*	*	*		3	E31	4
					RPLS-- 5120-575-1665											
P	D		4920-653-5986	808382 <66640>	ADAPTER.....	12	EA		1					1	E63	
P	D		4920-671-8062	809316 <66640>	FIXTURE.....	12	EA		1					1	E22	3
P	D		4920-696-6787	800053 <66640>	PLUG,IMPELLER SHAFT.....	12	EA		1					1	E32	2
			4920-696-6797	806682 <66640>	ADAPTER USE UNTIL EXHAUSTED,	1	EA		1						E32	
					NO REPLACEMENT											

(1) SOURCE, MAINT AND REC CODE (a) SOURCE CODE	(b) MAINT (LEVEL)	(c) REC CODE	(2) FEDERAL STOCK NUMBER	(3) DESCRIPTION REFERENCE NUMBER			MODELS USABLE ON CH-34C	(4) UNIT OF ISSUE	(5) QTY INC IN UNIT PACK	(6) QTY INC IN UNIT	(7) 30-DAY DS/GS MAINT ALW (a) 1-20	(b) 21-50	(c) 51-100	(8) 1-YR ALW PER 100 EQUIP CNTGCY	(9) DEPOT MAINT ALW PER 100 EQUIP	(10) ILLUSTRATION (a) FIG NO	(b) ITEM NO
P	H		4920-698-4211	T25128	<06848>	BRACKET,GAGE.....	12	EA		1	*	*	*		*	E70	3
P	D	R	4920-802-2678	807130	<66640>	HOLDER,HONE STONE.....	12	EA		1					1	E14	
P	D		4920-802-2679	807133	<66640>	HONE BODY,MASTER ROD..... KNUCKLE PIN BORES	12	EA		1					1	E73	1
P	D	R	4920-802-2680	807664	<66640>	GAGE,MASTER CHECKING.....	12	EA		1					1	E16	8
P	D	R	4920-802-2681	807666	<66640>	GAGE,CHECKING.....	12	EA		1					1	E16	
P	D	R	4920-802-2686	807132	<66640>	HOLDER,HONE.....	12	EA		1					1	E72	6
P	D		4920-807-7830	808921	<66640>	FIXTURE,ENGINE PARTS..... PRESSURE FLUSHING	12	EA		1					3	E21	7
P	D		4920-834-1448	S1670-10694	<78286>	WRENCH ASSEMBLY.....		EA		AR					*	E77	3
P	D	R	4920-858-8429	810052	<66640>	SUPPORT,ALIGNMENT CHECKING... MASTER & ARTICULATING ROD, KNUCKLE PIN HOLES U/W 4920-859-8048	12	EA		1					1	E25	3
P	D		4920-859-6137	810054	<66640>	BAR,ALIGNMENT CHECKING..... MASTER ROD CRANKPIN HOLE U/W 4920-859-8048	12	EA		1					2	E25	4
P	D		4920-859-8048	810051	<66640>	STAND,ALIGNMENT CHECKING..... MASTER & ARTICULATING ROD HOLES U/W 4920-858-8429	12	EA		1					1	E25	2
P	D		4920-859-8049	810060	<66640>	BAR,ALIGNMENT CHECKING..... MASTER & ARTICULATING ROD, PISTON PIN BUSHING HOLE U/W 4920-859-8048	12	EA		1					1	E25	6
P	D		4920-859-8050	810061	<66640>	BAR,ALIGNMENT CHECKING..... MASTER & ARTICULATING ROD, PISTON PIN BUSHING HOLE U/W 4920-859-8048	12	EA		1					1	E25	
P	D	R	4920-888-9528	801793	<66640>	STAND,SUPERCHARGER REAR..... COVER AND HOUSING	12	EA		1					1	E34	7
P	D	R	4920-888-9533	808255	<66640>	JIG,PROPELLER SHAFT REAR..... BUSHING PIN HOLE	12	EA		1					1	E18	4
P	D	R	4920-888-9535	808750	<66640>	REMOVING AND INSTALLING..... TOOL,PROPELLER SHAFT	12	EA		1					1	E20	6
P	D		4920-897-8377	810056	<66640>	BAR,ALIGNMENT CHECKING..... MASTER & ARTICULATING ROD, KNUCKLE PIN HOLES U/W 4920-859-8048	12	EA		1					3	E25	5
P	D	R	4920-955-9571	808481	<66640>	FIXTURE,SHOT PEENING-MASTER.. ROD KNUCKLE PIN HOLES	12	EA		1					1	E19	6
P	D	R	4920-961-1375	808733	<66640>	FIXTURE,MASTER ROD KNUCKLE... PIN HOLES	12	EA		1					1	E20	5
P	D		4920-962-8935	810423	<66640>	RACK,HOLDING.....	12	EA		1					1	E86	
P	H		4920-979-5632	T26801	<06348>	HOLDER,VAPOR VENT FLOAT..... REGULATOR ASSEMBLY	12	EA		1	*	*	*		1	E30	1
P	D	R	4920-979-5633	809834	<66640>	GAGE.....	12	EA		1					1	E24	3
P	D		4920-983-2464	810037	<66640>	BLOCK.....	12	EA		1					1	E24	8
P	D		5110-012-2245	807933	<66640>	REAMER,HAND.....	12	EA		1					1	E68	2
P	D		5110-012-2250	810429	<66640>	REAMER,HAND-STRAIGHT RD..... SHANK W/SQ END CARBON STEEL,FLUTE,STRAIGHT STYLE, 1-1/2 IN.LG,0.303 IW.DIA,	12	EA		1					1	E58	6

(1) SOURCE, MAINT AND REC CODE (a) SOURCE CODE	(b) MAINT LEVEL	(c) REC CODE	(2) FEDERAL STOCK NUMBER	REFERENCE NUMBER	(3) DESCRIPTION	MODELS USABLE ON CH-34C	(4) UNIT OF ISSUE	(5) QTY INC IN UNIT PACK	(6) QTY INC IN UNIT	(7) 30-DAY DS/GS MAINT ALW (a) 1-20	(b) 21-50	(c) 51-100	(8) 1-YR ALW PER 100 EQUIP CNTGCY	(9) DEPOT MAINT ALW PER 100 EQUIP	(10) ILLUSTRATION (a) FIG NO	(b) ITEM NO
					CONTINUED 9-1/2 IN.O/A LG										E58	6
P	D		5110-012-2251	810430 <66640>	REAMER,SUPERCHARGER.....	1	EA		1					1	E59	1
P	D		5110-012-2252	810431 <66640>	REAMER,HAND.....	12	EA		1					1	E59	
P	D		5110-012-2255	810432 <66640>	REAMER,HAND.....	12	EA		1					1	E59	
P	D		5110-012-2257	810433 <66640>	REAMER,HAND-STRAIGHT RD..... SHANK W/SQ END,CARBON STEEL,FLUTE,STRAIGHT STYLE, 1-1/2 IN.LG,0.311 IN.DIA, 9-1/2 IN.O/A LG	12	EA		1					1	E59	
P	D		5110-012-2258	810434 <66640>	REAMER,HAND.....	12	EA		1					1	E59	
P	D		5110-012-2259	810435 <66640>	REAMER,HAND.....	12	EA		1					1	E59	
P	D		5110-012-2281	809480 <66640>	REAMER,HAND.....	12	EA		1					1	E93	3
P	O		5110-033-4938	923239 <66640>	REAMER,HAND.....	12	EA		1	*	*	*		1	E68	4
P	D		5110-065-8162	807829 <66640>	BROACH,ROCKER ARM BUSHING....	12	EA		1					1	E88	6
P	D		5110-212-2590	807158 <66640>	HOLDER,CYLINDER EXHAUST.....	12	EA		1					1	E67	3
P	D		5110-329-6105	923238 <66640>	REAMER,IMPELLER DRIVE GEAR...	12	EA		1					1	E85	6
P	D		5110-395-8404	806861 <66640>	CUTTER,SPARK PLUG INSERT..... CYLINDER HOLE CHAMFERING, 1-3/8 IN.DIA	12	EA		1					1	E12	8
P	D		5110-395-8409	806904 <66640>	BAR,EXHAUST VALVE SEAT..... RECESS COUNTERBORE CUTTER	12	EA		1					3	E13	5
P	D		5110-395-8448	923245 <66640>	REAMER,HAND-H SPEED STEEL,... STRAIGHT RD SHANK,0.706 IN. DIA PILOT,6 FLUTES 0.717 IN.DIA,1/2 IN.SHANK DIA,3/8 IN.SQ MALE DRIVE,11 IN.O/A LG.	2	EA		1					1	E91	
P	D		5110-398-2998	805508 <66640>	REAMER,IMPELLER DRIVE GEAR... SHAFT	12	EA		1					1	E70	8
P	D		5110-440-8154	803979 <66640>	COLLAR-CAM & OIL SUMP PUMP... DRIVE SUPPORT BUSHING, BORING & FACING,1.191 IN. ID,2-1/2 IN.OD,1/2 IN.THK	12	EA		1					2	E3	3
P	H		5110-440-8446	805799 <66640>	SCRAPER,EXHAUST VALVE-GUIDE.. & TIP ASSY REMOVING	12	EA		1	*	*	*		3	E9	4
P	D		5110-440-9220	923243 <66640>	REAMER,ROCKER HUB BOLT.....	12	EA		1					1	E91	5
P	D		5110-440-9221	923244 <66640>	REAMER.....	12	EA		1					1	E91	
P	D		5110-490-7059	805708 <66640>	CUTTER.....	12	EA		1					1	E63	7
P	D		5110-560-2452	808599 <66640>	CAULKING CHISEL.....	12	EA		1					1	E78	
P	D		5110-730-0777	83420 <66640>	BROACH-KNUCKLE PIN BUSHING,.. BURNISHING,1-3/16 IN.DIA, 8-1/2 IN.LG	12	EA		1					1	E88	2
P	D		5120-010-5556	810441 <66640>	EXPANDER,SUPERCHARGER.....	12	EA		1					1	E59	
P	D		5120-010-5557	809931 <66640>	HOLDER,EXHAUST AND INTAKE....	12	EA		1					1	E82	3
P	D		5120-012-2288	810438 <66640>	PUNCH,INSTALLING.....	12	EA		1					1	E59	4
P	D		5120-012-4662	809932 <66640>	HOLDER,CYLINDER ROCKER.....	1	EA		1					1	E46	3
P	D		5120-012-4665	810258 <66640>	IMBEDDER,CHISEL LIPPED.....	12	EA		1					1	E40	
P	D		5120-012-4666	810389 <66640>	REMOVER,EXHAUST VALVE.....	12	EA		1					1	E58	2
P	D		5120-012-4671	807936 <66640>	ADAPTER,SUPERCHARGER.....	12	EA		1					1	E54	3
P	D		5120-012-9264	802097 <66640>	DRIVER.....	12	EA		1					1	E4	6
P	D		5120-021-9091	PT810365 <66640>	PULLER.....	1	EA		1					1	E23	

(1) SOURCE, MAINT AND REC CODE (a) SOURCE CODE	(b) MAINT LEVEL	(c) REC LEVEL CODE	(2) FEDERAL STOCK NUMBER	REFERENCE NUMBER	(3) DESCRIPTION	MODELS USABLE ON CH-34C	(4) UNIT OF ISSUE	(5) QTY INC IN UNIT PACK	(6) QTY INC IN UNIT	(7) 30-DAY DS/GS MAINT ALW (a) 1-20	(b) 21-50	(c) 51-100	(8) 1-YR ALWPER 100 EQUIP CNTGCY	(9) DEPOT MAINT ALWPER 100 EQUIP	(10) ILLUSTRATION (a) FIG NO	(b) ITEM NO
P	F		5120-028-1646	SWE8473 <87641>	PLATE.....	1	EA		1	1	1	1		1	E28	2
P	F		5120-033-0541	800684 <66640>	CROWFOOT ATTACHMENT,SOCKET... WRENCH-NONRATCHETING,12 POINT BOX,5/8 IN.SIZE,3/8 IN.SQ FEMALE DRIVE	12	EA		1	1	1	1		1	E33	1
P	D		5120-033-0566	801983 <66640>	SOCKET,WRENCH,FACE SPANNER... 4 PRONGS,1/25 IN.W,3/32 IN. LG,13/16 IN.OD,3/8 IN. FEMALE SQ DRIVE	12	EA		1					1	E34	9
P	F		5120-033-0619	803372 <66640>	WRENCH,SPANNER-TUBULAR..... TYPE,9/16 IN.DIA OPENING, 3/32 IN.W LUG,2 IN.O/A LG,1 IN.O/A W	1	EA		1	1	1	1		2	E1	2
P	D		5120-033-0635	804091 <66640>	REMOVER AND INSTALLING.....	12	EA		1					1	E65	
P	F		5120-033-0653	804885 <66640>	CROWFOOT ATTACHMENT,SOCKET... WRENCH-NONRATCHETING,12 POINT BOX,1/2 IN.SIZE,3/8 IN.DRIVE OPENING	12	EA		1	1	1	1		1	E6	6
P	D		5120-033-0712	806733 <66640>	PROTECTOR,CRANKCASE SECTION..	12	EA		1					1	E66	8
P	D		5120-033-0725	806870 <15555>	SPACER,IMPELLER SHAFT.....	12	EA		1					1	E13	4
P	D		5120-033-0727	806902 <66640>	ADAPTER.....	12	EA		AR					*	E2	
P	D		5120-033-0764	807112 <66640>	PLUG.....	12	EA		1					1	E64	7
P	D		5120-033-0776	82267 <66640>	WRENCH,SPANNER,TUBULAR TYPE.. 1-15/16 IN.OD,LARGE END, 57/64 IN.DIA HANDLE HOLE, FEMALE,SQ SHAPE,3/4 IN. W/COLLAR,9/16 IN.LG, 2-15/16 IN.OD	12	EA		1					1	E84	4
P	D		5120-033-0817	84356 <66640>	WRENCH,BOX.....	12	EA		1					1	E69	4
P	D		5120-033-0839	923125 <66640>	CROWFOOT ATTACHMENT SOCKET... WRENCH-NONRATCHETING TYPE, 12 POINT BOX TYPE,7/16 IN. WRENCH OPENING	2	EA		1					1	E90	7
P	D		5120-033-0841	923163 <66640>	ADAPTER.....	12	EA		1					1	E48	6A
P	D		5120-034-3760	808887 <66640>	PILOT AND NUT,DRIVE GEAR.....	12	EA		1					1	E60	2
P	D		5120-034-3766	801930D1 <66640>	PILOT.....	12	EA		1					1	E42	2
P	D		5120-034-3769	810162 <66640>	ADAPTER,CLAMP.....	12	EA		1					1	E47	6
P	D		5120-034-3779	810266 <66640>	WRENCH.....	12	EA		1					1	E57	4
P	D		5120-034-3780	810298 <66640>	COMPRESSOR,VALVE SPRING..... RPLS-- 5120-144-5625	12	EA		1					1	E44	1
P	D		5120-034-3796	808890 <66640>	PILOT AND NUT DRIVE GEAR.....	12	EA		1					1	E60	3
P	D		5120-034-3797	810280 <66640>	PULLER,PROPELLER.....	12	EA		1					1	E66	
P	D		5120-034-3798	810305 <66640>	INSTALLER,PROPELLER SHAFT....	12	EA		1					1	E95	1
P	D		5120-034-3799	809887 <66640>	WRENCH.....	12	EA		1					1	E43	2
P	D		5120-034-3800	809886 <66640>	WRENCH.....	1	EA		1					1	E43	3
P	D	R	5120-034-3806	810160 <66640>	FIXTURE ASSEMBLY.....	12	EA		1					1	E47	5
P	D		5120-034-3818	810159 <66640>	ADAPTER RING.....	12	EA		1					1	E48	1
P	D		5120-037-7287	807488 <66640>	PULLER,MECHANICAL.....	12	EA		1					1	E73	3
P	D		5120-037-7305	807778 <66640>	ADAPTER.....	12	EA		1					1	E94	5
P	D		5120-037-7315	807950 <66640>	PLUG,SUPERCHARGER.....	12	EA		1					1	E53	3
P	D		5120-037-7318	807956 <66640>	PLUG AND NUT ASSEMBLY.....	12	EA		1					1	E76	4
P	D		5120-065-8142	807551 <66640>	PLUG AND BASE.....	12	EA		1					1	E73	4

(1) SOURCE, MAINT AND REC CODE (a) SOURCE CODE	(b) MAINT LEVEL	(c) REC CODE	(2) FEDERAL STOCK NUMBER	REFERENCE NUMBER		(3) DESCRIPTION	MODELS USABLE ON CH-34C	(4) UNIT OF ISSUE	(5) QTY INC IN UNIT PACK	(6) QTY INC IN UNIT	(7) 30-DAY DS/GS MAINT ALW (a) 1-20	(b) 21-50	(c) 51-100	(8) 1-YR ALW PER 100 EQUIP CNTGCY	(9) DEPOT MAINT ALW PER 100 EQUIP	(10) ILLUSTRATION (a) FIG NO	(b) ITEM NO
P	D		5120-065-8146	807827	<66640>	PLUG,ALIGNING	12	EA		1					1	E64	8
P	D		5120-065-8147	807828	<66640>	PLUG,COLLAR BUSHING	12	EA		1					1	E65	1
P	D		5120-065-8148	807836	<66640>	PLUG,HOLE BORING	12	EA		1					1	E47	3
P	D		5120-065-8150	807952	<66640>	PUNCH	12	EA		1					1	E55	2
P	D		5120-065-8151	808929	<66640>	BASE	12	EA		1					1	E41	5
P	D		5120-065-8152	808930	<66640>	BASE	12	EA		1					1	E41	
P	D		5120-065-8153	808931	<66640>	SPACER	12	EA		1					1	E42	1
P	D		5120-065-8154	808950	<66640>	BAR	12	EA		1					1	E68	6
P	D		5120-070-6192	810439	<66640>	EXPANDER	12	EA		1					1	E59	5
P	D		5120-070-8427	807926	<66640>	TOOL BIT	12	EA		1					1	E52	3
P	D		5120-075-7408	810232	(66640)	INSTALLER,EXHAUST VALVE	12	EA		1					1	E27	5
P	D		5120-086-6692	810370	<66640>	REAMER	12	EA		1					1	E84	2
P	D		5120-091-5732	807155	<66640>	BAR,CYLINDER EXHAUST VALVE GUIDE	12	EA		1					1	E15	1
P	D		5120-091-5740	807537	<66640>	PULLER	12	EA		1					1	E61	1
P	D		5120-091-5749	807600	<66640>	GUIDE,EXHAUST VALVE	12	EA		1					1	E89	8
P	D		5120-091-5750	807601	<66640>	GUIDE,EXHAUST VALVE	12	EA		1					1	E89	9
P	D		5120-091-5753	807642	<66640>	BAR	12	EA		1					1	E55	6
P	D		5120-091-5767	807833	<66640>	SPINNING TOOL-ROCKER	12	EA		1					1	E47	2
P	D		5120-091-5769	807835	<66640>	PILOT,BUSHING FACING	12	EA		1					1	E8	
P	D		5120-091-5771	807914	<66640>	BAR,BUSHING REMOVING	12	EA		1					1	E52	1
P	D		5120-091-5775	807923	<66640>	ADAPTER,BUSHING,BORING	12	EA		1					1	E54	2
P	D		5120-091-5777	807930	<66640>	PILOT,NUT	12	EA		1					1	E75	5
P	D		5120-091-5778	807940	<66640>	PILOT	12	EA		1					1	E53	1
P	D		5120-091-5780	807948	<66640>	EXTRACTOR,COLLAR	12	EA		1					1	E54	6
P	D		5120-091-5781	807954	<66640>	PLUG,BASE	12	EA		1					1	E76	3
P	D	R	5120-098-4426	808257	<66640>	LOOSENING TOOL	12	EA		1					1	E67	6
P	D		5120-098-4484	806924	<66640>	SOCKET,WRENCH,FACE SPANNER	12	EA		1					1	E95	3
P	D		5120-142-3931	T25060	<06848>	WRENCH,SPANNER-FIXED HOOK TYPE,5/64 IN.THK OF HOOK, 1-25/32 IN.DIA CIRCLE	1	EA		1					1	E29	2
P	H		5120-142-3940	T25079	<06848>	WRENCH,ECONOMIZER AND POPPET VALVE-6 POINT,3/32 IN.DIA,6-3/32 IN.LG,1-27/32 IN.OFFSET	1	EA		1					1	E29	3
P	H		5120-142-3949	T25138	<06848>	TOOL,STAKING,VALVE SCREW	1	EA		AR		*	*		*	E70	4
P	F		5120-142-6630	82703	<66640>	PUSH ROD,REMOVING TOOL	12	EA		1	*	*	*		1	E48	6
P	D		5120-143-7891	800069	<80044>	TOOL,SPINNING,SUPERCHARGER	12	EA		1					1	E48	8
P	D		5120-143-7892	800070	<66640>	TOOL,SPINNING,SUPERCHARGER	12	EA		1					3	E32	4
P	F		5120-143-8022	801763	<66640>	DRIVER,SUPERCHARGER DRAIN VALVE-LOCK RING INSTALLING	12	EA		1	1	1	1		1	E34	5
P	F		5120-143-8116	800523	<66640>	FIXTURE,HOLDING,SUPERCHARGER	12	EA		1	*	*	*		1	E38	8
P	D		5120-144-2588	804178	<66640>	PULLER,MECHANICAL	12	EA		3					*	E34	
P	D		5120-144-2591	804365	<66640>	BURNISHER,SUPERCHARGER	12	EA		1					1	E50	2
P	D		5120-144-2615	83345	<66640>	ROLLER,PISTON PIN BUSHING	2	EA		1					1	E42	6
X1				83345D3	<66640>	.TAPER ROLLER,PISTON PIN	12	EA		1						E42	
P	D		5120-144-2624	83421	<66640>	PILOT AND NUT,CUTTER PISTON	12	EA		1					1	E84	5
P	D		5120-144-5045	80198	<66640>	EXTENSION,WRENCH CRANKSHAFT	12	EA		1					1	E35	5
P	O		5120-144-5049	801999	<66640>	SOCKET,ADJUSTING OIL RELIEF VALVE NUT ADJUSTING	12	EA		AR	*	*	*		*	E35	6
P	D		5120-144-5194	802403	<66640>	BROACH,BURNISHING,PISTON	1	EA		1					1	E36	5
P	D		5120-144-5260	802980	<66640>	BIT,BORING BAR,SUPERCHARGER	12	EA		1					1	E12	2

(1) SOURCE, MAINT AND REC CODE (a) SOURCE CODE	(b) MAINT LEVEL	(c) REC CODE	(2) FEDERAL STOCK NUMBER	REFERENCE NUMBER		(3) DESCRIPTION	MODELS USABLE ON CH-34C	(4) UNIT OF ISSUE	(5) QTY INC IN UNIT PACK	(6) QTY INC IN UNIT	(7) 30-DAY DS/GS MAINT ALW (a) 1-20	(b) 21-50	(c) 51-100	(8) 1-YR ALW PER 100 EQUIP CNTGCY	(9) DEPOT MAINT ALW PER 100 EQUIP	(10) ILLUSTRATION (a) FIG NO	(b) ITEM NO
P	D		3460-144-5261	802981	<66640>	BAR,BORING,SUPERCHARGER..... REAR COVER BUSHING,REMOVING & FINISHING	12	EA		1					1	E38	1
P	D		5120-144-5299	803282	<66640>	WRENCH,CRANKSHAFT FRONT.....	1	EA		1					1	E14	8
P	F		5120-144-5395	802820	<66640>	DRIVER,HEADLESS SCREW..... BUSHING-1/4 IN.-28 NF	12	EA		1	1	1	1		2	E37	2
P	F		5120-144-5397	802821	<66640>	DRIVER,HEADLESS SCREW..... BUSHING-5/16 IN.-24 NF	1	EA		1	*	*	*		2	E37	
P	F		5120-144-5398	802822	<66640>	DRIVER,HEADLESS SCREW..... BUSHING-3/8 IN.-24 NF	1	EA		1	*	*	*		2	E37	
P	D		5120-144-5419	802993	<66640>	BIT,TOOL-BORING BAR.....	12	EA		1					3	E38	2
P	D		5120-144-5464	803273	<66640>	ADAPTER,WRENCH-CRANKSHAFT....	12	EA		1					1	E38	9
P	D		5120-144-5471	803277	<66640>	ADAPTER,WRENCH,CRANKSHAFT....	1	EA		1					1	E10	2
P	F		5120-144-5478	803328	<66640>	PILOT,MAGNETO AND GENERATOR.. DRIVE SHAFT OIL SEAL	1	EA		1	1	1	1		1	E1	1
P	D		5120-144-5483	803358	<66640>	DRIFT,CRANKCASE DOWL..... INSTALLING	1	EA		1					1	E13	7
P	F		5120-144-5508	803523	<66640>	BEARING,SLEEVE.....	2	EA		1	*	*	*		*	E13	
P	F		5120-144-5509	803524	<66640>	BEARING SLEEVE.....	12	EA		1	*	*	*		*	E13	
P	D		5120-144-5528	803676	<66640>	HOLDER,COUNTER BORE CUTTER...	1	EA		1					1	E2	2
		R	5120-144-5625	803925	<66640>	COMPRESSOR,VALVE SPRING..... RPL-BY >120-034-3780	12									E3	
P	F		5120-144-5691	804671	<66640>	WRENCH,PROPELLER.....	12	EA		1	*	*	*		1	E94	3
P	D		5120-144-5775	81403	<66640>	HANDLE,WRENCH,SLIDING.....	12	EA		1					1	E87	1
P	D		5120-144-5886	84869	<66640>	BAR,ALIGNMENT CRANKSHAFT.....	12	EA		1					1	E85	2
P	D		5120-144-5895	83373	<66640>	ROLLER,KNUCKLE PIN BUSHING...	12	EA		1					1	E43	1
P	D		5120-144-5903	84536	<66640>	INSTALLING TOOL,OIL SEAL.....	12	EA		1					1	E96	3
P	D		5120-144-5987	84989	<66640>	ADAPTER,PULLER,IMPELLER.....	12	EA		1					1	E49	3
P	D		5120-168-4642	805145	<66640>	SCREW,CRANKSHAFT REAR..... REMOVER	12	EA		1					1	E65	6
P	D		5120-168-6479	802867	<66640>	DRIFT,INTAKE VALVE SEAT..... REMOVING	12	EA		1					1	E37	5
P	D		5120-169-7411	805906	<66640>	WRENCH,SPARK PLUG.....	1	EA		1					1	E45	3
P	D		5120-169-7548	805466	<66640>	SPACER,IMPELLER SHAFT.....	12	EA		1					1	E92	4
P	D		5120-169-7652	805831	<66640>	CAP,PISTON PIN AND KNUCKLE...	12	EA		1					1	E42	5
P	D		5120-169-7666	805866	<66640>	SOCKET,WRENCH,FACE SPANNER... 4 PRONGS,0.303 IN.W,21/64 IN.LG,1/2 IN.SQ FEMALE DRIVE,3-9/64 IN.OD	1	EA		1	*	*	*		1	E9	5
P	D		5120-169-7684	802841	<66640>	DRIVER,BEARING AND BUSHING... STEEL,BOSS,0.917 IN.DIA, 3-1/2 IN.LG,PILOT,0.682 IN. DIA,3/4 IN.LG,8 IN.O/A LG	12	EA		1					1	E65	2
P	D		5120-169-7685	802842	<66640>	DRIVER,BEARING AND BUSHING... STEEL,0.945 IN.DIA,3-1/2 IN.LG,0.743 IN.PILOT DIA, 3/4 IN.LG,8 IN.O/A LG	12	EA		1					1	E9	7
P	D		5120-169-7787	805707	<66640>	PILOT AND NUT,ROCKER HUB.....	12	EA		1					1	E60	1
P	D		5120-169-7793	805720	<66640>	BUSHING,SPARK PLUG INSERTER..	12	EA		1					1	E45	2
P	D		5120-169-7794	805722	<66640>	BUSHING,SPARK PLUG INSERT....	12	EA		1					1	E45	
P	D		5120-169-7795	805723	<66640>	BUSHING,SPARK PLUG INSERT....	12	EA		1					1	E45	6
P	D		5120-169-7826	805773	<66640>	CRIMPING TOOL,CYLINDER.....	12	EA		1					1	E66	2

(1) SOURCE, MAINT AND REC CODE (a) SOURCE CODE	(b) MAINT LEVEL	(c) REC CODE	(2) FEDERAL STOCK NUMBER	REFERENCE NUMBER		(3) DESCRIPTION	MODELS USABLE ON CH-34C	(4) UNIT OF ISSUE	(5) QTY INC IN UNIT PACK	(6) QTY INC IN UNIT	(7) 30-DAY DS/GS MAINT ALW (a) 1-20	(b) 21-50	(c) 51-100	(8) 1-YR ALW PER 100 EQUIP CNTGCY	(9) DEPOT MAINT ALW PER 100 EQUIP	(10) ILLUSTRATION (a) FIG NO	(b) ITEM NO
P	D		5120-169-7946	806419	<66640>	DRIVER,UPPER PUSH ROD.....	12	EA		1					1	E46	1
P	D		5120-169-7958	806420	<66640>	NUT,UPPER PUSH ROD.....	12	EA		1					1	E46	2
P	D		5120-169-7970	804081	<66640>	PLUG,BUSHING COUNTERWEIGHT...	12	EA		1					1	E23	
P	F		5120-203-9530	808140	<66640>	SOCKET,WRENCH,FACE SPANNER... 4 PRONGS,1-1/2 IN.OD,0.335 IN.W,3/16 IN.LG,1/2 IN.SQ FEMALE DRIVE	12	EA		AR	1	1	1		1	E18	2
P	D		5120-212-2521	803310	<66640>	HOLDING TOOL,CAM DRIVE.....	1	EA		1					1	E11	
P	D		5120-212-2523	803867	<66640>	INSTALLING TOOL,CYLINDER.....	1	EA		1					*	E11	
P	D		5120-212-2560	806259	<15555>	PEENING TOOL-CYLINDER HEAD...	1	EA		1					1	E44	5
P	D		5120-212-2585	806943	<66640>	PULLER.....	12	EA		1					1	E65	9
P	D		5120-212-2629	807374	<66640>	INSTALLING TOOL,INTAKE.....	12	EA		1					1	E15	4
P	D		5120-212-2657	923054	<15555>	TURNING TOOL,REDUCTION GEAR..	12	EA		1					1	E40	5
P	H		5120-212-2667	923275	<66640>	PULLER,MECHANICAL.....	12	EA		1	*	*	*		1	E56	1
AD	D			923536	<66640>	PULLER ASSEMBLY.....	12	EA		1					*	E49	
P	H		5120-212-3924	11-3421	<77820>	REMOVER,CONNECTOR.....	1	EA		1	1	1	1		2	E30	5
P	D		5120-212-3928	11-3462	<77820>	INSTALLING TOOL,BREAKER..... U/O 2925-294-2596	1	EA		1					1	E30	6
P	H		5120-212-3932	11-3695	<77820>	CONTACT REMOVING KIT..... U/O 2925-294-2596	1	EA		1	*	*	*		2	E31	1
P	D		5120-213-9736	QB80051-7	<19315>	PUSHER,STARTER.....	1	EA		1					*	E70	2
P	F		5120-215-2343	807586	<15555>	WRENCH ASSEMBLY,CYLINDER..... HOLD DOWN-CAP SCREW,BOX,1/2 IN.HEX RPLS-- 5120-169-7783	12	EA		1	1	1	1		1	E16	3
P	D		5120-215-2347	807722	<66640>	REMOVING TOOL,CYLINDER.....	12	EA		1					1	E65	5
P	D		5120-215-2352	923050	<66640>	PULLER,MECHANICAL.....	2	EA		1					1	E85	3
P	D		5120-230-6392	TF7200-1	<58332>	WRENCH,TORQUE-L-HANDLE,SQ.... SHAPE,W/CASE,MIL-H-4034A	1	EA		1					1	E36	
P	H		5120-305-5179	11-1523	<77820>	WRENCH,BOX-STRAIGHT SINGLE... HEAD,33 TEETH,2 IN.ID,8 IN. O/A LG U/O 2925-294-2596	1	EA		1	1	1	1		2	E30	3
P	D		5120-306-5181	805878	<66640>	INSTALLING TOOL.....	12	EA		1					1	E66	3
P	D		5120-306-5187	805947	<66640>	PULLER,VALVE TAPPET GUIDE....	12	EA		1					1	E65	8
P	O		5120-306-5188	805965	<66640>	WRENCH,SPANNER..... NONADJUSTABLE,1-31/64 IN. THK LUG,11/64 IN.W,18 IN.LG O/A	12	EA		1	1	1	1		1	E48	5A
			5120-330-6565	807700	<66640>	TOOL INSTALLING RPL-BY..... 5120-075-7408	12									E17	
P	F		5120-330-6575	808171	<66640>	PULLER,MECHANICAL-HANDLE,.... 1-1/8 IN.DIA,WEIGHT,1-1/2 IN.DIA,UPPER SHAFT,1/2 IN. DIA,LOWER SHAFT,1/4 IN.DIA, CLAWS,1/4 IN.DIA	12	EA		1	1	1	1		3	E18	3
P	D		5120-331-5952	808082	<66640>	INSTALLING TOOL.....	12	EA		1					1	E17	
P	D		5120-339-0575	808385	<66640>	LOCATOR,MASTER ROD,KNUCKLE... PIN HOLES	12	EA		1					1	E77	
P	D		5120-341-4851	808124	<66640>	INSTALLING TOOL-CYLINDER..... HOLD CAP SCREW LOCKING PLATE U/W 5120-613-4989	12	EA		1					3	E18	1
X1				808124D2	<66640>	.WEIGHT.....	12	EA		1						E18	

(1) SOURCE, MAINT AND REC CODE (a) SOURCE CODE	(b) MAINT LEVEL	(c) REC CODE	(2) FEDERAL STOCK NUMBER	REFERENCE NUMBER	(3) DESCRIPTION	MODELS USABLE ON CH-34C	(4) UNIT OF ISSUE	(5) QTY INC IN UNIT PACK	(6) QTY INC IN UNIT	(7) 30-DAY DS/GS MAINT ALW (a) 1-20	(b) 21-50	(c) 51-100	(8) 1-YR ALW PER 100 EQUIP CNTGCY	(9) DEPOT MAINT ALW PER 100 EQUIP	(10) ILLUSTRATION (a) FIG NO	(b) ITEM NO
P	D		5120-345-3719	804357 <66640>	GUIDE,EXHAUST VALVE DUMMY.... 0.9668 IN.DIA	12	EA		1					1	E5	3
P	F		5120-395-8511	923484 <66640>	PULLER,VALVE TAPPET GUIDE.... RPLS-- 5120-398-3112	2	EA		1	1	1	1		1	E92	3
P	D		5120-396-0155	806862 <66640>	NUT,TORQUING.....	12	EA		1					1	E67	1
P	D		5120-398-2980	802622 <66640>	NOZZLE,AIR AND GAS ATTACHMENT	12	EA		1					1	E4	7
P	D		5120-398-4304	S6000-34 <12839>	SPANNER ATTACHMENT,SOCKET.... WRENCH-KEY TYPE,0.725 IN. DIA,0.120 IN.THK KEY,3/8 IN.SQ DRIVE	12	EA		1					*	E29	5
P	H		5120-398-4322	T25261 <06848>	SOCKET,WRENCH,FACE SPANNER...	1	EA		1	*	*	*		*	E77	2
P	H		5120-398-4323	T25262 <06848>	SPANNER ATTACHMENT,SOCKET.... WRENCH-3/8 IN.SQ DRIVE,5/8 IN.DIA CAPACITY,0.070 IN.TO 0.072 IN.THK	1	EA		1	1	1	1		1	E29	6
P	D		5120-440-8084	803084 <66640>	PUNCH,DRIVE PIN-TAPERED..... TYPE,3 IN.LG	12	EA		1					1	E9	8
P	D		5120-440-8109	803424 <66640>	ADAPTER,PULLER,IMPELLER.....	12	EA		1					1	E14	9
P	D		5120-440-8158	803985 <66640>	PLUG.....	12	EA		1					1	E23	4
P	D		5120-440-8310	805284 <66640>	PULLER.....	12	EA		1					1	E49	2
P	D		5120-440-8436	805774 <66640>	CAULKING TOOL.....	12	EA							*	E9	1
P	D		5120-440-8742	806639 <66640>	REMOVING AND INSTALLING..... TOOL-ACCESSORY DRIVE GEAR SPRING	1	EA		1					1	E12	1
P	F		5120-490-7255	923057 <66640>	PULLER,MECHANICAL.....	12	EA		1	*	*	*		1	E85	4
P	F		5120-490-7256	923058 <66640>	PULLER,PISTON PIN REMOVING...	12	EA		1	1	1	1		1	E89	5
X1				923058-2 <66640>	.SCREW,PISTON PIN PULLER.....	12	EA		1						E89	
X1				923058-10 <66640>	.CIRCLET PISTON,PIN PULLER...	12	EA		1						E89	
P	D		5120-490-7259	923071 <66640>	PULLER-OIL STRAINER ASSY..... REMOVING	2	EA		1	*	*	*		*	E90	4
X1				92307107 <66640>	.ADAPTER,PULLER.....	2	EA		1						E90	
P	F		5120-490-7261	923073 <66640>	PULLER-ELECTRICAL TACHOMETER, DRIVESHAFT GEAR,OIL SEAL REMOVING	2	EA		1	1	1	1		1	E90	5
X1				923073D3 <66640>	.LOCK,DRIVE SHAFT.....	1	EA		1						E90	
X1				923073D4 <66640>	.YOKE,DRIVE SHAFT.....	2	EA		1						E90	
X1				92307D5 <66640>	.PIN,HEADLESS DRIVE.....	2	EA		1						E90	
X1				923073D6 <66640>	.PIN,HEADLESS DRIVE.....	2	EA		1						E90	
X1				923073D7 <66640>	.SCREW,DRIVE SHAFT.....	1	EA		1						E90	
P	F		5120-490-7264	923087 <66640>	INSTALLING TOOL-TACHOMETER... DRIVESHAFT GEAR OIL SEAL	2	EA		1	*	*	*		1	E90	6
P	F		5120-490-7288	923152 <66640>	INSTALLING TOOL-TACHOMETER,.. DRIVESHAFT GEAR HOUSING COVER OIL SEALS	12	EA		1	*	*	*		*	E91	1
			5120-490-7309	923223 <66640>	PULLER USE UNTIL EXHAUSTED,. NO REPLACEMENT	12	EA		1						E91	
P	D		5120-490-7311	923225 <66640>	PULLER.....	2	EA		1					1	E85	5
X1				923225-1 <66640>	.ADAPTER,BREATHER PLUG.....	2	EA		1						E85	
P	D		5120-511-0189	808633 <66640>	CAULKING TOOL.....	12	EA		1					1	E44	3
P	D		5120-511-0191	808636 <66640>	ALIGNING TOOL,CYLINDRICAL....	12	EA		1					1	E78	6
P	H		5120-511-0610	T25039 <06848>	WRENCH,POPPET,VALVE.....	1	EA		1	1	1	1		1	E28	6
P	H		5120-511-0611	T25040 <06848>	WRENCH,TELESCOPING-POPPET....	1	EA		1	1	1	1		1	E29	1

(1) SOURCE, MAINT AND REC CODE (a) SOURCE CODE	(b) MAINT CODE	(c) REC CODE	(2) FEDERAL STOCK NUMBER	REFERENCE NUMBER	(3) DESCRIPTION	MODELS USABLE ON CH-34C	(4) UNIT OF ISSUE	(5) QTY INC IN UNIT PACK	(6) QTY INC IN UNIT	(7) 30-DAY DS/GS MAINT ALW (a) 1-20	(b) 21-50	(c) 51-100	(8) 1-YR ALW PER 100 EQUIP CNTGCY	(9) DEPOT MAINT ALW PER 100 EQUIP	(10) ILLUSTRATION (a) FIG NO	(b) ITEM NO
					CONTINUED VALVE & RETAINING NUT,6 POINT,1/2 IN.OD,3/8 IN.ID, SOCKETS,W/T HANDLE										E29	1
X2	D		5120-535-5841	808580 <66640>	PLUG.....	12	EA		1					*	E29	
P	D		5120-540-0664	807476 <66640>	DRIVER,BEARING AND BUSHING...	12	EA		1					1	E96	
P	F		5120-555-0869	810297 <66640>	WRENCH.....	12	EA		1	1	1	1		3	E22	4
P	D		5120-566-2857	805094 <66640>	GUIDE,EXHAUST VALVE DUMMY....	12	EA		1					1	E89	3
P	D		5120-566-2858	805095 <80254>	GUIDE,EXHAUST VALVE DUMMY....	12	EA		1					1	E89	7
P	D		5120-566-2859	805096 <80254>	GUIDE,EXHAUST VALVE DUMMY....	12	EA		1					1	E89	6
P	D		5120-568-0469	806356 <66640>	RING,HYDRAULIC MULTIPURPOSE..	12	EA		1					1	E71	3
P	D		5120-570-7337	810365D5 <66640>	JAWS,PULLER.....	12	EA		1					1	E41	
P	F		5120-571-3924	804439-1 <66640>	BASE,REMOVING AND INSTALLING.	12	EA		AR	1	1	1		1	E5	4
P	F		5120-571-3925	804439-2 <66640>	PLUG,REMOVING AND INSTALLING.	12	EA		1	1	1	1		1	E5	5
P	D		5120-573-6362	808905 <66640>	DRIVER,BEARING AND BUSHING...	12	EA		1					1	E21	5
P	H		5120-574-6055	11-4149 <77820>	BODY,TIMING LOCK WRENCH.....	12	EA		1	*	*	*		1	E36	8
P	F		5120-575-1664	808081 <66640>	PLUG AND BASE,OIL SEAL..... REMOVING	12	EA		AR	1	1	1		1	E17	5
		R	5120-575-1665	807743 <66640>	INSTALLING TOOL-PISTON RING.. RPL-BY 4920-628-8231	12									E17	
P	D		5120-590-8303	808907 <66640>	PUNCH,DRIVE PIN-STRAIGHT..... TYPE,1.102 IN.LG,0.001 IN. DIA POINT	12	EA		1					1	E31	5
P	F		5120-595-8194	923231 <66640>	BIT,SCREWDRIVER-FLAT TIP..... 9/16 IN.W,2-1/16 IN.O/A LG, 1/2 IN.FEMALE SQ DRIVE	12	EA		1	1	1	1		3	E91	4
P	F		5120-608-8086	923067-1 <66640>	.ADAPTER,PULLER.....	2	EA		1	1	1	1		1	E90	2
P	D		5120-596-4095	808455 <66640>	SOCKET,SOCKET WRENCH.....	12	EA		1					1	E51	5
P	D		5120-613-9356	806794 <66640>	JACK,POWER RAM.....	12	EA		1					1	E66	
P	F		5120-628-3942	923067-2 <66640>	.ADAPTER,ROCKER ARM-HUB BOLT. REMOVING,IMPACT PULLER	2	EA		1	1	1	1		1	E90	3
P	D		5120-640-6776	11-3880 <77820>	WRENCH,SOCKET.....	1	EA		1					1	E31	3
P	D		5120-654-8927	809425 <66640>	PULLER,MECHANICAL.....	12	EA		1					1	E81	1
P	D		5120-654-8995	809724 <66640>	WRENCH,SPANNER-NONADJUSTABLE.	12	EA		1					1	E4	8
P	O		5120-674-0346	809781 <66640>	WRENCH-CARBURETOR ATTACHING.. NUT,9/16 IN.BOX END, TORQUING	12	EA		1	*	*	*		*	E24	2
P	O		5120-674-0347	809780 <66640>	WRENCH,OPEN END,FIXED..... CARBURETOR ATTACHING NUT, TORQUING,9/16 IN.DIA	12	EA		1	1	1	1		1	E24	1
P	D		5120-704-7535	S1670-10601 <78286>	REPLACER,OIL SEAL.....	12	EA		1					1	E33	2
P	O		5120-769-3380	807779 <66640>	BIT,SCREWDRIVER-FLAT TIP..... RPLS-- 5120-033-0715	12	EA		1	*	*	*		*	E17	2
P	D		5120-776-1292	808429 (88402)	SWAGING TOOL.....	12	EA		1					1	E78	2
P	F		5120-786-5318	FX100 <66640>	EXTENSION,TORQUE WRENCH..... 2 TO 1200 LB	12	EA		1	*	*	*		*	E28	1
P	F		5120-795-7244	810041 <66640>	WRENCH,TORQUE-9/16 IN..... DOUBLE HEX,3/8 IN.FEMALE SQ DRIVE	12	EA		1	*	*	*		1	E25	1
P	O		5120-909-4311	810522 <66640>	PULLER.....	2	EA		1	*	*	*		*	E33	4
P	D		5120-963-1149	809888 <66640>	PULLER,EXHAUST VALVE SEAT....	12	EA		1					1	E24	4

(1) SOURCE, MAINT AND REC CODE (a) SOURCE CODE	(b) MAINT LEVEL	(c) REC CODE	(2) FEDERAL STOCK NUMBER	REFERENCE NUMBER		(3) DESCRIPTION	MODELS USABLE ON CH-34C	(4) UNIT OF ISSUE	(5) QTY INC IN UNIT PACK	(6) QTY INC IN UNIT	(7) 30-DAY DS/GS MAINT ALW (a) 1-20	(b) 21-50	(c) 51-100	(8) 1-YR ALW PER 100 EQUIP CNTGCY	(9) DEPOT MAINT ALW PER 100 EQUIP	(10) ILLUSTRATION (a) FIG NO	(b) ITEM NO
P	D		5120-980-0226	810028D2	<66640>	LOCATING PLUG.....	12	EA		1					1	E83	2
P	D		5120-980-0227	810028D1	<66640>	LOCATING PLUG.....	12	EA		1					1	E24	2
P	D		5120-980-0229	810005	<66640>	FIXTURE,GRINDING.....	12	EA		1					1	E83	1
P	D		5120-983-0501	810005D4	<66640>	.BOLT ASSEMBLY.....	12	EA		1					1	E83	
P	D		5120-983-2467	810035	<66640>	BLOCK,RISER.....	12	EA		1					1	E24	
P	D		5120-986-7213	802901	<66640>	CROWFOOT ATTACHMENT,SOCKET... WRENCH-12 POINT BOX,1/2 IN. SQ FEMALE DRIVE,5/8 IN. WRENCH OPENING	12	EA		1					3	E37	6
P	F		5120-988-5324	83130	<66640>	WRENCH,SOCKET-SINGLE SOCKET.. BRACE TYPE,FIXED HANDLE 27 IN.O/A LG	12	EA		1	1	1	1		3	E87	7
P	D		5130-012-4711	810436	<66640>	PILOT,BUSHING SUPERCHARGER...	1	EA		1					1	E59	2
P	D		5130-142-0953	809937	<66640>	JIG-DRILL ACCESS DRIVE.....	12	EA		1					1	E82	4
P	D		5130-144-5735	805156	<66640>	TOOL BIT,BORING BAR.....	12	EA		1					1	E40	1
P	H		5130-398-3210	923277	<66640>	BROACH,TACHOMETER DRIVE.....	12	EA		1	*	*	*		1	E69	5
P	H		5130-398-3211	923278	<66640>	BROACH,TACHOMETER DRIVE.....	12	EA		1	*	*	*		1	E69	
P	D		5130-612-0602	809024	<66640>	GRINDER.....	12	EA		1					1	E43	6
P	D		5130-612-0629	809024D40	<66640>	.DIAMOND.....	12	EA		1					1	E43	
P	D		5130-612-0604	809024D15	<66640>	.CUP,GRINDING WHEEL.....	12	EA		1					1	E43	
P	D		5133-012-4710	810427	<66640>	DRILL,BUSHING,SUPERCHARGER...	1	EA		1					1	E58	5
P	D		5133-037-7293	807612	<66640>	CUTTER,COUNTERSINK--H SPEED.. STEEL,45 DEG ANGLE,6 FLUTES,PILOTS INTERCHANGEABLE	12	EA		1					1	E29A	
P	D		5133-037-7296	807615	<66640>	CUTTER,COUNTERSINK.....	12	EA		1					*	E63	
P	D		5133-037-7297	807616	<66640>	CUTTER,COUNTERSINK.....	12	EA		1					*	E63	
P	D		5133-037-7298	807617	<66640>	CUTTER,GUIDE,VALVE STEM.....	12	EA		1					1	E63	9
P	D		5133-037-7299	807618	<66640>	CUTTER,GUIDE.....	12	EA		1					1	E63	11
P	D		5133-037-7300	807619	<66640>	CUTTER,COUNTERSINK.....	12	EA		1					1	E63	12
P	D		5133-037-7301	807620	<66640>	CUTTER,GUIDE,VALVE STEM.....	12	EA		1					1	E63	10
P	D		5120-070-8427	807926	<66640>	TOOL BIT.....	12	EA		1					1	E52	3
P	D		5133-072-1996	807925	<66640>	TOOL BIT.....	12	EA		1					1	E52	2
P	D		5133-072-1997	807934	<66640>	TOOL BIT.....	12	EA		1					1	E52	4
P	D		5133-072-1998	807935	<66640>	TOOL BIT.....	12	EA		1					1	E52	5
P	D	R	5133-142-1624	807915	<66640>	DRILL,JIG DOWEL.....	12	EA		1					1	E53	6
P	D		5133-143-7942	801097	<66640>	BIT,TOOL,WEDGE TYPE,PISTON...	12	EA		1					1	E1	4
P	D		5133-143-7997	801501	<66640>	BIT,TOOL,BORING BAR REAR.....	12	EA		1					1	E38	
P	D		5133-143-8047	801926	<66640>	CUTTER,COUNTERBORE,PISTON....	12	EA		1					1	E63	4
P	D		5133-203-6884	800071	<88402>	DRILL,TWIST.....	12	EA		1					1	E32	5
P	D		5133-203-6886	800067	<66640>	DRILL,TWIST-H SPEED STEEL,... STRAIGHT RD SHANK,9/64 IN. DIA,2 FLUTES,RH,8 IN.O/A LG	1	EA		1					1	E32	
P	D		5133-212-2637	807382	<66640>	CUTTER,COUNTERBORE.....	12	EA		1					2	E15	
P	D		5133-212-2638	807383	<66640>	CUTTER,COUNTERBORE.....	12	EA		1					2	E15	
P	D		5133-212-2640	807385	<66640>	CUTTER,COUNTERBORE.....	12	EA		1					2	E15	
P	H		5133-219-5890	808408	<66640>	COUNTERSINK.....	12	EA		1					1	E29A	
P	D		5133-357-0130	805821	<66640>	CUTTER,COUNTERBORE.....	12	EA		1					1	E70	7
P	D		5133-377-7295	807614	<66640>	CUTTER,COUNTERSINK.....	12	EA		1					*	E29A	
P	D		5133-440-8055	802839	<66640>	DRILL-INTAKE VALVE GUIDE..... REMOVING	12	EA		1					3	E37	3

(1) SOURCE, MAINT AND REC CODE (a) SOURCE CODE	(b) MAINT LEVEL	(c) REC CODE	(2) FEDERAL STOCK NUMBER	(3) DESCRIPTION REFERENCE NUMBER			MODELS USABLE ON CH-34C	(4) UNIT OF ISSUE	(5) QTY INC IN UNIT PACK	(6) QTY INC IN UNIT	(7) 30-DAY DS/GS MAINT ALW (a) 1-20	(b) 21-50	(c) 51-100	(8) 1-YR ALW PER 100 EQUIP CNTGCY	(9) DEPOT MAINT ALW PER 100 EQUIP	(10) ILLUSTRATION (a) FIG NO	(b) ITEM NO
P	D		5133-440-8441	805781	<66640>	CUTTER,COUNTERSINK.....	12	EA		1					1	E12	
P	D		5133-490-7061	805714	<66640>	CUTTER,COUNTERBORE.....	12	EA		1					1	E63	5
P	D		5133-490-7063	805718	<66640>	CUTTER,COUNTERBORE.....	12	EA		1					1	E63	6
P	D		5133-541-4058	808886	<66640>	COUNTERBORE,MACHINE.....	12	EA		1					1	E68	5
P	D		5133-574-5312	808769	<66640>	CUTTER.....	12	EA		1					1	E57	
P	D	R	5133-574-5313	808768	<66640>	CUTTER,COUNTERBORE.....	12	EA		1					1	E57	9
P	D	R	5133-574-5314	808767	<66640>	CUTTER,COUNTERBORE.....	12	EA		1					1	E57	7
P	D		5133-595-8257	807932	<66640>	COUNTERBORE,MACHINE.....	12	EA		1					1	E75	
P	D		5133-596-6251	807708	<66640>	DRILL,TWIST-H SPEED STEEL,... STRAIGHT RD SHANK,1/2 IN. DIA,2 FLUTES,4-3/4 IN. FLUTED O/A LG	12	EA		1					1	E96	
P	D		5133-621-7536	808823	<66640>	DRILL,BREATHER.....	12	EA		1					1	E79	3
P	D		5133-730-3096	808568	<66640>	DRILL,EXHAUST VALVE GUIDE.... REMOVING,0.949 IN.DIA	12	EA		1					3	E20	1
P	D		5133-895-0424	808899	<66640>	CUTTER,EXHAUST VALVE RECESS..	12	EA		1					1	E79	
P	D		5136-012-4677	810437	<66640>	TAP,CLEANING.....	1	EA		1					1	E59	3
			5136-144-5239	802802	<66640>	TAP,THREAD CUTTING..... RPL-BY 5136-808-2376	12									E36	
			5136-174-6251	804328	<66640>	TAP,THREAD CUTTING..... RPL-BY 5136-776-1306	12									E4	
P	D		5136-229-9285	800068	<66640>	TAP,THREAD CUTTING.....	12	EA		1					1	E64	1
P	F		5136-275-9698	809749	<66640>	TAP.....	12	EA		1	*	*	*		1	E64	
P	F		5136-275-9699	809751	<66640>	TAP.....	12	EA		1	*	*	*		1	E64	
P	D		5136-277-6709	805530	<66640>	TAP,THREAD CUTTING.....	1	EA		1					*	E64	
P	F		5136-490-7151	806455	<66640>	TAP,THREAD CUTTING-H SPEED... STEEL,HAND TYPE,PLUG STYLE, STRAIGHT SHANK,SQ DRIVE, 5/16 IN.-24 NF,COMMERCIAL GROUND THD,RH,4 FLUTES, 2-23/32 IN.O/A LG,0.012 IN. OVERSIZE	1	EA		1	*	*	*		3	E11	3
P	F		5136-490-7154	806458	<66640>	TAP,THREAD CUTTING-H SPEED... STEEL,HAND TYPE,PLUG STYLE, STRAIGHT SHANK,SQ DRIVE, 7/16 IN.-20 NF,COMMERCIAL GROUND THD,RH,4 FLUTES, 3-5/32 IN.O/A LG,0.012 IN. OVERSIZE	1	EA		1	*	*	*		3	E11	
P	F		5136-490-7155	806459	<66640>	TAP,THREAD CUTTING-H SPEED... STEEL,HAND TYPE,PLUG STYLE, STRAIGHT SHANK,SQ DRIVE,1/2 IN.-20 NF,COMMERCIAL GROUND THD,RH,4 FLUTES,3-3/8 IN. O/A LG,0.003 IN.OVERSIZE	1	EA		1	*	*	*		3	E11	
P	F		5136-490-7156	806460	<66640>	TAP,THREAD CUTTING-H SPEED... STEEL,HAND TYPE,PLUG STYLE, STRAIGHT SHANK,SQ DRIVE,1/2 IN.-20 NF,COMMERCIAL GROUND THD,RH,4 FLUTES,3-3/8 IN. O/A LG,0.007 IN.OVERSIZE	1	EA		1	*	*	*		3	E11	
P	F		5136-490-7160	806464	<66640>	TAP,THREAD CUTTING-H SPEED...	1	EA		1	1	1	1		3	E11	

(1) SOURCE, MAINT AND REC CODE (a) SOURCE CODE	(b) MAINT LEVEL	(c) REC CODE	(2) FEDERAL STOCK NUMBER	REFERENCE NUMBER	(3) DESCRIPTION	MODELS USABLE ON CH-34C	(4) UNIT OF ISSUE	(5) QTY INC IN UNIT PACK	(6) QTY INC IN UNIT	(7) 30-DAY DS/GS MAINT ALW (a) 1-20	(b) 21-50	(c) 51-100	(8) 1-YR ALW PER 100 EQUIP CNTGCY	(9) DEPOT MAINT ALW PER 100 EQUIP	(10) ILLUSTRATION (a) FIG NO	(b) ITEM NO
					CONTINUED STEEL,HAND TYPE,PLUG STYLE, STRAIGHT SHANK,SQ DRIVE, 9/16 IN.-18 NF,COMMERCIAL GROUND THD,RH,4 FLUTES, 3-19/32 IN.O/A LG,0.012 IN. OVERSIZE										E11	
P	F		5136-490-7162	806466 <66640>	TAP,THREAD CUTTING-H SPEED... STEEL,HAND TYPE,PLUG STYLE, STRAIGHT SHANK,SQ DRIVE,5/8 IN.-18 NF,COMMERCIAL GROUND THD,RH,4 FLUTES,3-13/16 IN. O/A LG,0.007 IN.OVERSIZE	1	EA		1	*	*	*		3	E11	
P	F		5136-490-7165	804329 <66640>	TAP,THREAD CUTTING-H SPEED... STEEL,HAND TYPE,PLUG STYLE, STRAIGHT SHANK,SQ DRIVE, 11/16 IN.-16 NS,COMMERCIAL GROUND THD,RH,4 FLUTES, 4-1/32 IN.O/A LG,0.007 IN. OVERSIZE	12	EA		1	*	*	*		3	E4	
P	F		5136-490-7166	806470 <66640>	TAP,THREAD CUTTING-H SPEED... STEEL,HAND TYPE,PLUG STYLE, STRAIGHT SHANK,SQ DRIVE, 11/16 IN.-16 NS,COMMERCIAL GROUND THD,RH,4 FLUTES, 4-1/32 IN.O/A LG,0.012 IN. OVERSIZE	1	EA		1	*	*	*		3	E11	
P	F		5136-525-6882	806467 <66640>	TAP,THREAD CUTTING-H SPEED... STEEL,HAND TYPE,PLUG STYLE, STRAIGHT SHANK,SQ DRIVE,5/8 IN.-18 NF,COMMERCIAL GROUND THD,RH,4 FLUTES,3-13/16 IN. O/A LG,0.012 IN.OVERSIZE	1	EA		1	*	*	*		3	E11	
P	F		5136-596-1593	809533 <66640>	TAP,THREAD CUTTING-H SPEED... STEEL,HAND TYPE,PLUG STYLE, STRAIGHT SHANK,SQ DRIVE, 5/16 IN.-18 NC,COMMERCIAL GROUND THD,RH,4 FLUTES, 2-23/32 IN.O/A LG,0.006 IN. OVERSIZE	12	EA		1	*	*	*		3	E22	
P	F		5136-613-9357	807483 <66640>	TAP,THREAD CUTTING..... 3/4 IN.-16 NF,0.007 IN. OVERSIZE	1	EA		1	*	*	*		3	E15	
P	F		5136-618-3312	809528 <66640>	TAP,THREAD CUTTING-H SPEED... STEEL,HAND TYPE,PLUG STYLE, STRAIGHT SHANK,SQ DRIVE,1/4 IN.-20 NC,COMMERCIAL GROUND THD,RH,4 FLUTES,2-1/2 IN. O/A LG,0.007 IN.OVERSIZE	12	EA		1	*	*	*		3	E22	
P	F		5136-618-4695	809539 <66640>	TAP,THREAD CUTTING-H SPEED... STEEL,HAND TYPE,PLUG STYLE, STRAIGHT SHANK,SQ DRIVE,3/8	12	EA		1	*	*	*		3	E22	

(1) SOURCE, MAINT AND REC CODE (a) SOURCE CODE	(b) MAINT LEVEL	(c) REC CODE	(2) FEDERAL STOCK NUMBER	REFERENCE NUMBER	(3) DESCRIPTION	MODELS USABLE ON CH-34C	(4) UNIT OF ISSUE	(5) QTY INC IN UNIT PACK	(6) QTY INC IN UNIT	(7) 30-DAY DS/GS MAINT ALW (a) 1-20	(b) 21-50	(c) 51-100	(8) 1-YR ALW PER 100 EQUIP CNTGCY	(9) DEPOT MAINT ALW PER 100 EQUIP	(10) ILLUSTRATION (a) FIG NO	(b) ITEM NO
					CONTINUED IN.-16 NC,COMMERCIAL GROUND THD,RH,4 FLUTES,2-15/16 IN. O/A LG,0.007 IN.OVERSIZE										E22	
P	F		5136-671-2246	809527 <66640>	TAP,THREAD CUTTING-H SPEED... STEEL,HAND TYPE,PLUG STYLE, STRAIGHT SHANK,SQ DRIVE,1/4 IN.-20 NC,COMMERCIAL GROUND THD,RH,4 FLUTES,2-1/2 IN. O/A LG,0.006 IN.OVERSIZE	12	EA		1	*	*	*		3	E22	
P	F		5136-671-2249	809530 <66640>	TAP,THREAD CUTTING-H SPEED... STEEL,HAND TYPE,PLUG STYLE, STRAIGHT SHANK,SQ DRIVE,1/4 IN.-20 NC,COMMERCIAL GROUND THD,RH,4 FLUTES,2-1/2 IN. O/A LG,0.012 IN.OVERSIZE	12	EA		1	*	*	*		3	E22	
P	F		5136-671-2250	809532 <66640>	TAP,THREAD CUTTING-H SPEED... STEEL,HAND TYPE,PLUG STYLE, STRAIGHT SHANK,SQ DRIVE, 5/16 IN.-18 NC,COMMERCIAL GROUND THD,RH,4 FLUTES, 2-23/32 IN.O/A LG,0.003 IN. OVERSIZE	12	EA		1	*	*	*		3	E22	5
P	F		5136-671-2253	809535 <66640>	TAP,THREAD CUTTING-H SPEED... STEEL,HAND TYPE,PLUG STYLE, STRAIGHT SHANK,SQ DRIVE, 5/16 IN.-18 NC,COMMERCIAL GROUND THD,RH,4 FLUTES, 2-23/32 IN.O/A LG,0.009 IN. OVERSIZE	12	EA		1	*	*	*		3	E22	
P	F		5136-671-2254	809536 <66640>	TAP,THREAD CUTTING-HIGH..... SPEED STEEL,PLUG STYLE, STRAIGHT SHANK,SQ,5/16 IN. SIZE,1-1/8 IN.LG,3 FLUTES, 2-23/32 IN.O/A LG	12	EA		1	*	*	*		1	E81	3
P	F		5136-671-2256	809538 <66640>	TAP,THREAD CUTTING-H SPEED... STEEL,HAND TYPE,PLUG STYLE, STRAIGHT SHANK,SQ DRIVE, 3/8 IN.-16 NC,COMMERCIAL GROUND THD,RH,4 FLUTES, 2-15/16 IN.O/A LG,0.006 IN. OVERSIZE	12	EA		1	*	*	*		3	E22	
P	F		5136-671-2258	809540 <66640>	TAP,THREAD CUTTING-H SPEED... STEEL,HAND TYPE,PLUG STYLE, STRAIGHT SHANK,SQ DRIVE,3/8 IN.-16 NC,COMMERCIAL GROUND THD,RH,4 FLUTES,2-15/16 IN. O/A LG,0.009 IN.OVERSIZE RPLS-- 5136-596-4232	12	EA		1	*	*	*		3	E22	
P	F		5136-671-2259	809541 <66640>	TAP,THREAD CUTTING-H SPEED... STEEL,HAND TYPE,PLUG STYLE, STRAIGHT SHANK,SQ DRIVE,3/8	12	EA		1	*	*	*		3	E22	

(1) SOURCE, MAINT AND REC CODE (a) SOURCE CODE	(b) MAINT LEVEL	(c) REC CODE	(2) FEDERAL STOCK NUMBER	REFERENCE NUMBER	(3) DESCRIPTION	MODELS USABLE ON CH-34C	(4) UNIT OF ISSUE	(5) QTY INC IN UNIT PACK	(6) QTY INC IN UNIT	(7) 30-DAY DS/GS MAINT ALW (a) 1-20	(b) 21-50	(c) 51-100	(8) 1-YR ALW PER 100 EQUIP CNTGCY	(9) DEPOT MAINT ALW PER 100 EQUIP	(10) ILLUSTRATION (a) FIG NO	(b) ITEM NO
					CONTINUED IN.-16 NC,COMMERCIAL GROUND THD,RH,4 FLUTES,2-15/16 IN. O/A LG,0.012 IN.OVERSIZE										E22	
P	F		5136-671-2260	809543 <66640>	TAP,THREAD CUTTING-H SPEED... STEEL,HAND TYPE,PLUG STYLE, STRAIGHT SHANK,SQ DRIVE, 7/16 IN.-14 NC,COMMERCIAL GROUND THD,RH,4 FLUTES, 3-5/32 IN.O/A LG,0.003 IN. OVERSIZE	12	EA		1	1	1	1		3	E22	6
P	F		5136-671-2261	809544 <66640>	TAP,THREAD CUTTING-H SPEED... STEEL,HAND TYPE,PLUG STYLE, STRAIGHT SHANK,SQ DRIVE, 0.242 IN.W,7/16 IN.SIZE 1-7/16 IN.LG,4 FLUTES, 3-5/32 IN.O/A LG,0.006 IN. OVERSIZE	12	EA		1	*	*	*		3	E22	
P	F		5136-671-2262	809545 <66640>	TAP,THREAD CUTTING-H SPEED... STEEL,HAND TYPE,PLUG STYLE, STRAIGHT SHANK,SQ DRIVE, 7/16 IN.-14 NC,COMMERCIAL GROUND THD,RH,4 FLUTES, 3-5/32 IN.O/A LG,0.007 IN. OVERSIZE	12	EA		1	*	*	*		3	E22	
P	F		5136-671-2263	809546 <66640>	TAP,THREAD CUTTING-H SPEED... STEEL,HAND TYPE,PLUG STYLE, STRAIGHT SHANK,SQ DRIVE, 0.242 IN.W ACROSS FLATS, 1-7/16 IN.LG,4 FLUTES, 3-5/32 IN.O/A LG,0.009 IN. OVERSIZE	12	EA		1	*	*	*		3	E22	
P	F		5136-671-2264	809547 <66640>	TAP,THREAD CUTTING-H SPEED... STEEL,HAND TYPE,PLUG STYLE, STRAIGHT SHANK,SQ DRIVE, 7/16 IN.-14 NC,COMMERCIAL GROUND THD,RH,4 FLUTES, 3-5/32 IN.O/A LG,0.012 IN. OVERSIZE	12	EA		1	*	*	*		3	E22	
P	F		5136-671-2265	809549 <66640>	TAP,THREAD CUTTING-H SPEED... STEEL,HAND TYPE,PLUG STYLE, STRAIGHT SHANK,SQ DRIVE,1/2 IN.-13 NC,RH,4 FLUTES,3-3/8 IN.O/A LG,0.003 IN.OVERSIZE	12	EA		1	*	*	*		3	E22	
P	F		5136-671-2266	809550 <66640>	TAP,THREAD CUTTING-H SPEED... STEEL,HAND TYPE,PLUG STYLE, STRAIGHT SHANK,SQ DRIVE,1/2 IN.1-21/32 IN.LG,4 FLUTES, 3-3/8 IN.O/A LG	12	EA		1	*	*	*		3	E22	
P	F		5136-671-2267	809551 <66640>	TAP,THREAD CUTTING-H SPEED... STEEL,HAND TYPE,PLUG STYLE, STRAIGHT SHANK,SQ DRIVE,1/2	12	EA		1	*	*	*		3	E22	

(1) SOURCE, MAINT AND REC CODE (a) SOURCE CODE	(b) MAINT LEVEL	(c) REC CODE	(2) FEDERAL STOCK NUMBER	REFERENCE NUMBER	(3) DESCRIPTION	MODELS USABLE ON CH-34C	(4) UNIT OF ISSUE	(5) QTY INC IN UNIT PACK	(6) QTY INC IN UNIT	(7) 30-DAY DS/GS MAINT ALW (a) 1-20	(b) 21-50	(c) 51-100	(8) 1-YR ALW PER 100 EQUIP CNTGCY	(9) DEPOT MAINT ALW PER 100 EQUIP	(10) ILLUSTRATION (a) FIG NO	(b) ITEM NO
					CONTINUED IN.-13 NC,RH,4 FLUTES,3-3/8 IN.O/A LG,0.007 IN.OVERSIZE										E22	
P	F		5136-671-2268	809552 <66640>	TAP,THREAD CUTTING-H SPEED... STEEL,HAND TYPE,PLUG STYLE, 0.275 IN.W OF DRIVE END,1/2 IN.SIZE,4 FLUTES,3-3/8 IN.O/A,LG,0.009 IN.OVERSIZE RPLS-- 5136-596-4230	12	EA		1	*	*	*		3	E22	
P	F		5136-671-2269	809553 <66640>	TAP,THREAD CUTTING-H SPEED... STEEL,HAND TYPE,PLUG STYLE, STRAIGHT SHANK,SQ DRIVE,1/2 IN.-13 NC,RH,4 FLUTES,3-3/8 IN.O/A LG,0.012 IN.OVERSIZE	12	EA		1	1	1	1		1	E22	
P	F		5136-671-2270	809555 <66640>	TAP,THREAD CUTTING-H SPEED... STEEL,HAND TYPE,PLUG STYLE, STRAIGHT SHANK,SQ DRIVE, 0.322 IN.W OF DRIVE END, 9/16 IN.SIZE,4 FLUTES, 3-19/32 IN.O/A LG,0.003 IN. OVERSIZE	12	EA		1	*	*	*		3	E22	
P	F		5136-671-2271	809556 <66640>	TAP,THREAD CUTTING-H SPEED... STEEL,HAND TYPE,PLUG STYLE, STRAIGHT SHANK,SQ DRIVE, 0.322 IN.W OF DRIVE END, 9/16 IN.SIZE,4 FLUTES, 3-19/32 IN.O/A LG,0.006 IN. OVERSIZE RPLS-- 5136-596-4222	12	EA		1	*	*	*		3	E22	
P	F		5136-671-2272	809557 <66640>	TAP,THREAD CUTTING-H SPEED... STEEL,HAND TYPE,PLUG STYLE, STRAIGHT SHANK,SQ DRIVE, 0.322 IN.W OF DRIVE END, 9/16 IN.SIZE,4 FLUTES, 3-19/32 IN.O/A LG,0.007 IN. OVERSIZE	12	EA		1	*	*	*		3	E22	
P	F		5136-671-2273	809558 <66640>	TAP,THREAD CUTTING-H SPEED... STEEL,HAND TYPE,PLUG STYLE, STRAIGHT SHANK,SQ DRIVE, 0.322 IN.W OF DRIVE END, 9/16 IN.SIZE,4 FLUTES, 3-19/32 IN.O/A LG,0.009 IN. OVERSIZE RPLS-- 5136-596-4238	12	EA		1	*	*	*		3	E22	
P	F		5136-671-2274	809559 <66640>	TAP,THREAD CUTTING-H SPEED... STEEL,HAND TYPE,PLUG STYLE, STRAIGHT SHANK,SQ DRIVE, 9/16 IN.-12 NC,COMMERCIAL GROUND THD,RH,4 FLUTES, 3-19/32 IN.O/A LG,0.012 IN. OVERSIZE	12	EA		1	*	*	*		3	E22	
P	F		5136-776-1305	809742 <66640>	TAP.....	12	EA		1	*	*	*		1	E81	

(1) SOURCE, MAINT AND REC CODE (a) SOURCE CODE	(b) MAINT LEVEL	(c) REC CODE	(2) FEDERAL STOCK NUMBER	REFERENCE NUMBER		(3) DESCRIPTION	MODELS USABLE ON CH-34C	(4) UNIT OF ISSUE	(5) QTY INC IN UNIT PACK	(6) QTY INC IN UNIT	(7) 30-DAY DS/GS MAINT ALW (a) 1-20	(b) 21-50	(c) 51-100	(8) 1-YR ALW PER 100 EQUIP CNTGCY	(9) DEPOT MAINT ALW PER 100 EQUIP	(10) ILLUSTRATION (a) FIG NO	(b) ITEM NO
P	F		5136-776-1306	809746	<66640>	TAP RPLS-- 5136-174-6251....	12	EA		1	*	*	*		1	E39	
P	F		5136-776-3683	809734	<66640>	TAP,THREAD CUTTING-H SPEED... STEEL,HAND TYPE,PLUG STYLE, STRAIGHT SHANK,SQ DRIVE, 7/16 IN.-20 NF,COMMERCIAL GROUND THD,RH,4 FLUTES, 3-5/32 IN.O/A LG,0.003 IN. OVERSIZE RPLS-- 5136-808-2377	12	EA		1	*	*	*		3	E23	5
P	F		5136-776-9509	809737	<66640>	TAP,THREAD CUTTING-H SPEED... STEEL,HAND TYPE,PLUG STYLE, STRAIGHT SHANK,SQ DRIVE,1/2 IN.-20 NF,COMMERCIAL GROUND THD,RH,4 FLUTES,3-5/32 IN. O/A LG,0.003 IN.OVERSIZE	12	EA		1	*	*	*		3	E23	
P	F		5136-808-2373	809741	<66640>	TAP,THREAD CUTTING-H SPEED... STEEL,HAND TYPE,PLUG STYLE, STRAIGHT SHANK,SQ DRIVE, 9/16 IN.-18 NF,COMMERCIAL GROUND THD,RH,4 FLUTES, 3-19/32 IN.O/A LG,0.007 IN. OVERSIZE	12	EA		1	*	*	*		3	E11	
P	F		5136-808-2374	809732	<66640>	TAP,THREAD CUTTING-H SPEED... STEEL,HAND TYPE,PLUG STYLE, STRAIGHT SHANK SQ DRIVE, 5/16 IN.-24 NF,NON-STD, COMMERCIAL GROUND THD,RH,3 FLUTES,2-23/32 IN.O/A LG, 0.007 IN.OVERSIZE RPLS-- 5136-144-5240	12	EA		1	*	*	*		1	E64	
P	F		5136-808-2375	806462	<66640>	TAP,THREAD CUTTING-H SPEED... STEEL,HAND TYPE,PLUG STYLE, STRAIGHT SHANK,SQ DRIVE, 9/16 IN.-18 NF,COMMERCIAL GROUND THD,RH,4 FLUTES, 3-19/32 IN.O/A LG,0.003 IN. OVERSIZE	12	EA		1	*	*	*		3	E11	
P	F		5136-808-2376	809731	<66640>	TAP,THREAD CUTTING-H SPEED... STEEL,HAND TYPE,BOTTOMING STYLE,STRAIGHT SHANK,SQ DRIVE,5/16 IN.-24 NF, COMMERCIAL GROUND THD,RH,3 FLUTES,2-23/32 IN.O/A LG RPLS-- 5136-144-5239	12	EA		1	*	*	*		2	E64	
			5136-808-2377	806456	<66640>	TAP,THREAD CUTTING..... RPL-BY 5136-776-3683	12									E11	
P	F		5136-851-9627	809735	<66640>	TAP,THREAD CUTTING.....	12	EA		1	*	*	*		1	E37	
P	D		5136-859-8127	810080	<66640>	TAP,THREAD CUTTING-4..... FLUTES,0.902 IN.DIA PILOT, 19/32 IN.SQ DRIVE,7 IN.O/A LG,0.015 IN.OVERSIZE	12	EA		1					3	E26	1
P	D		5136-859-8128	810082	<66640>	TAP,THREAD CUTTING-H SPEED...	12	EA		1					3	E26	

(1) SOURCE, MAINT AND REC CODE (a) SOURCE CODE	(b) MAINT LEVEL	(c) REC CODE	(2) FEDERAL STOCK NUMBER	REFERENCE NUMBER	(3) DESCRIPTION	MODELS USABLE ON CH-34C	(4) UNIT OF ISSUE	(5) QTY INC IN UNIT PACK	(6) QTY INC IN UNIT	(7) 30-DAY DS/GS MAINT ALW (a) 1-20	(b) 21-50	(c) 51-100	(8) 1-YR ALW PER 100 EQUIP CNTGCY	(9) DEPOT MAINT ALW PER 100 EQUIP	(10) ILLUSTRATION (a) FIG NO	(b) ITEM NO
					CONTINUED STEEL,HAND TYPE,PLUG STYLE, STRAIGHT SHANK,SQ DRIVE,3/8 IN.-16 NC,COMMERCIAL GROUND THD,RH,4 FLUTES,2-15/16 IN. O/A LG,0.009 IN.OVERSIZE										E26	
P	D		5136-859-8130	810081 <66640>	TAP,THREAD CUTTING-4..... FLUTES,0.902 IN.DIA PILOT, 19/32 IN.SQ DRIVE,7 IN.O/A LG,0.030 IN.OVERSIZE	12	EA		1					3	E26	
P	D		5136-861-4020	805528 <66640>	TAP,THREAD CUTTING.....	1	EA		1					1	E56	3
P	D		5210-012-4678	810086 <66640>	GAGE.....	12	EA		1					1	E45	4
			5210-012-9242	807958D19 <66640>	INDICATOR,DIAL-.100 IN.RANGE, .001 IN.GRADUATIONS,0 TO 2 TO 0 DIAL MARKING,1-1/4 IN. NOM DIA O/A,FIXED DIAL SETTING,CONTACT POINT ON STEM,PLUNGER CONTACT POINT ACTION,W/JEWELED BEARINGS USE UNTIL EXHAUSTED,NO REPLACEMENT	12	EA		1						E17	
P	D		5210-018-0204	808932 <66640>	GAGE.....	1	EA		1					1	E41	3
P	D		5210-018-0206	809379D19 <66640>	DIAL,INDICATOR.....	12	EA		1					1	E46	4
P	D		5210-018-0210	809195 <66640>	GAGE.....	12	EA		1					1	E48	3
P	D		5210-018-0213	810326 <66640>	GAGE.....	12	EA		1					1	E51	6
P	D		5210-034-3770	808635 <66640>	GAGE.....	12	EA		1					1	E44	4
P	D		5210-034-3824	810379 <66640>	GAGE,DEPTH.....	12	EA		1					1	E57	
P	D		5210-034-3825	810378 <66640>	GAGE,DEPTH.....	12	EA		1					1	E57	6
P	D		5210-070-6815	810383 <66640>	GAGE,SPLINE CHECKING.....	12	EA		1					1	E86	3
P	D		5210-098-4713	807628 <66640>	GAGE,CYLINDER EXHAUST.....	12	EA		1					1	E16	
P	D		5210-098-4714	807629 <66640>	GAGE,CYLINDER EXHAUST.....	1	EA		1					1	E61	2
P	D		5210-098-4715	807630 <66640>	GAGE,CYLINDER EXHAUST.....	12	EA		1					1	E16	
P	D		5210-212-2625	807370 <66640>	GAGE,EXHAUST VALVE GUIDE.....	12	EA		1					3	E15	3
P	D		5210-212-2644	807389 <66640>	GAGE-CYLINDER EXHAUST VALVE.. GUIDE	12	EA		1					3	E15	6
P	D		5210-212-2645	807390 <66640>	GAGE,CYLINDER-INDICATOR..... DIAL,0 TO 100 RANGE	12	EA		1					1	E60	
P	D		5210-217-3223	807587 (66640)	GAGE.....	2	EA		1					1	E73	5
P	D		5210-217-3235	807958 <66640>	INDICATOR,DIAL.....	12	EA		1					1	E17	
P	D		5210-320-1948	807119 <66640>	GAGE,INDICATOR DIAL,..... 0.0001 IN.ADJUSTABLE,3 IN. LG	12	EA		1					1	E72	5
P	D		5210-395-8416	806946 <66640>	GAGE,CYLINDER-EXHAUST VALVE..	12	EA		1					1	E14	1
P	D		5210-490-7213	806770 (66640)	GAGE,PLUG,PLAIN CYLINDRICAL..	12	EA		1					1	E12	7
P	D		5210-506-9454	923410 <66640>	GAGE,ARTICULATED ROD.....	12	EA		1					1	E85	7
P	D		5210-545-9302	806954 (66640)	GAGE,CYLINDER-INDICATOR.....	12	EA		1					1	E79	2
P	D		5210-584-3884	807188 (66640)	GAGE,CYLINDER INTAKE.....	12	EA		1					1	E60	6
P	D		5210-584-3886	809364 (66640)	INDICATOR,GAGE.....	12	EA		1					1	E80	5
P	D		5210-611-2633	808783 <66640>	GAGE.....	12	EA		1					1	E79	2
P	D		5210-654-8914	809403 <66640>	GAGE,DEPTH,RULE-3.375 IN.LG..	12	EA		1					1	E15	
P	D		5210-691-4881	807190 <66640>	GAGE,TIMING CHECK.....	12	EA		1					1	E37	
P	D		5210-868-1095	809994 <66640>	GAGE,TELESCOPING.....	2	EA		1					1	E82	
P	D		5210-868-1097	810017 (66640)	TELESCOPE ASSEMBLY.....	1	EA		1					1	E83	

(1) SOURCE, MAINT AND REC CODE (a) SOURCE CODE	(b) MAINT LEVEL	(c) REC CODE	(2) FEDERAL STOCK NUMBER	REFERENCE NUMBER	(3) DESCRIPTION	MODELS USABLE ON CH-34C	(4) UNIT OF ISSUE	(5) QTY INC IN UNIT PACK	(6) QTY INC IN UNIT	(7) 30-DAY DS/GS MAINT ALW (a) 1-20	(b) 21-50	(c) 51-100	(8) 1-YR ALW PER 100 EQUIP CNTGCY	(9) DEPOT MAINT ALW PER 100 EQUIP	(10) ILLUSTRATION (a) FIG NO	(b) ITEM NO
P	D		5210-868-1098	809996 <66640>	STAND,SURFACE PLATE.....	2	EA		1					1	E82	
P	D		5210-895-0427	809379 <66640>	GAGE,CONCENTRICITY.....	12	EA		1					1	E30A	
P	D		5220-012-4680	808801 <66640>	GAGE.....	1	EA		1					1	E57	1
P	D		5220-012-4681	808802 <66640>	GAGE.....	1	EA		1					1	E39	4
P	D		5220-012-4682	809483 <66640>	GAGE,PLUG,PLAIN CYLINDRICAL.. DOUBLE END,GO NO GO,1.8795 IN.OD,W/O AIR GROOVE	12	EA		1					1	E19	
P	D		5220-012-4686	809482 <66640>	GAGE.....	12	EA		1					1	E19	
P	D		5220-012-4687	809484 <66640>	GAGE.....	1	EA		1					1	E19	
P	D	R	5220-012-9271	809833 <66640>	GAGE.....	12	EA		1					1	E61	3
P	D	R	5220-012-9350	809839 <66640>	GAGE,RING,PLAIN.....	12	EA		1					1	E61	6
P	D	R	5220-012-9358	809841 <66640>	GAGE.....	12	EA		1					1	E62	2
P	D	R	5220-014-2053	809835 <66640>	GAGE.....	12	EA		1					1	E61	4
P	D		5220-014-2054	810408 <66640>	GAGE,TIMING,CYLINDER HEAD....	12	EA		1					1	E58	3
P	D		5220-015-0486	808274 <66640>	GAGE.....	12	EA		1					1	E16	
P	D		5220-015-6938	810409 <66640>	GAGE,ALIGNING,CYLINDER.....	12	EA		1					1	E58	4
P	D		5220-015-6939	810408D36 <66640>	GAGE,MASTER CYLINDER HEAD....	12	EA		1					1	E58	
P	D		5220-018-0208	809840 <66640>	GAGE,RING,PLAIN-SINGLE..... RING,GO,1.208 IN.ID	12	EA		1					1	E62	1
P	D		5220-028-1778	807787 <66640>	GAGE,REGRIND LIMITS-.....	12	EA		1					3	E17	3
P	D		5220-031-6689	802690 <66640>	GAGE.....	1	EA		1					1	E5	2
P	D		5220-031-6756	808048 <66640>	GAGE,VALVE SEAT BLUING.....	12	EA		1					1	E17	4
P	D		5220-034-3812	807524 <66640>	GAGE.....	12	EA		1					1	E96	
P	D		5220-034-3813	810230 <66640>	GAGE,FLUSH PIN,PLAIN..... CYLINDRICAL	12	EA		1					1	E31	6
P	D		5220-034-3814	807931 <66640>	GAGE,FLUSH PIN,PLAIN..... CYLINDRICAL	12	EA		1					1	E48	9
P	D		5220-034-3815	807941 <66640>	GAGE,FLUSH PIN,PLAIN..... CYLINDRICAL	12	EA		1					1	E29A	
P	D		5220-034-3816	807951 <66640>	GAGE,FLUSH PIN,PLAIN CYLINDER	12	EA		1					1	E76	2
P	D		5220-045-4505	808934 <66640>	GAGE,PLUG,PLAIN CYLINDRICAL..	12	EA		1					*	E33	5
P	D		5220-053-3964	810402 <66640>	GAGE,LIMIT PLUG.....	12	EA		1					1	E86	7
P	D		5220-053-3965	810393 <66640>	GAGE.....	1	EA		1					1	E86	6
P	D		5220-053-3966	810403 <66640>	GAGE,PLUG,CYLINDRICAL-DOUBLE. END,GO NO GO,1.2985 IN.ID, 1.2995 IN.OD,W/O AIR GROOVE	12	EA		1					1	E86	8
P	D		5220-053-3968	810392 <66640>	GAGE.....	1	EA		1					1	E86	5
P	D		5220-070-6816	810384 <66640>	JAWS,INTERNAL FUEL PUMP.....	12	EA		1					1	E58	1
P	D		5220-083-7324	810308 <66640>	GAGE,PISTON RING GROOVE..... RPLS-- 5220-143-8025 0.007 IN.CLEARANCE	12	EA		1					1	E27	7
P	D		5220-086-6691	810371 <66640>	GAGE,PLUG.....	12	EA		1					1	E84	3
P	D		5220-092-8530	11-4011 <77820>	GAGE,HEIGHT,CARBON BRUSH.....	1	EA		1					1	E36	7
P	D		5220-141-9386	807917 <66640>	GAGE,FLUSH PIN.....	12	EA		1					1	E52	6
P	D		5220-141-9696	807942 <66640>	GAGE,SNAP FIXED-..... STEEL FRAME,GO NO GO,5.250 IN.O/A LG	12	EA		1					1	E55	5
P	D		5220-142-6626	82641 <66640>	GAGE,PLUG,PLAIN CYLINDRICAL..	2	EA		1					1	E87	4
P	D		5220-142-7640	82765 <66640>	GAGE,PLUG,PLAIN CYLINDRICAL.. 0.6925 IN.OD	1	EA		1					1	E87	6
P	D		5220-143-7962	801205 <66640>	GAGE,FLUSH PIN,PLAIN..... CYLINDRICAL	12	EA		1					1	E34	8

(1) SOURCE, MAINT AND REC CODE (a) SOURCE CODE	(b) MAINT LEVEL	(c) REC CODE	(2) FEDERAL STOCK NUMBER	REFERENCE NUMBER		(3) DESCRIPTION	MODELS USABLE ON CH-34C	(4) UNIT OF ISSUE	(5) QTY INC IN UNIT PACK	(6) QTY INC IN UNIT	(7) 30-DAY DS/GS MAINT ALW (a) 1-20	(b) 21-50	(c) 51-100	(8) 1-YR ALW PER 100 EQUIP CNTGCY	(9) DEPOT MAINT ALW PER 100 EQUIP	(10) ILLUSTRATION (a) FIG NO	(b) ITEM NO
			5220-143-8025	801783	<66640>	GAGE,SNAP,PISTON RING..... RPL-BY 5220-083-7324	12									E27	
P	D		5220-143-8062	800111	<66640>	GAGE,PLUG,PLAIN CYLINDRICAL..	1	EA		1					1	E19	7
P	D		5220-144-2564	803429	<66640>	GAGE,PLUG,PLAIN CYLINDRICAL..	12	EA		1					*	E62	
P	D		5220-144-2585	80411	<66640>	GAGE,PLUG,PLAIN CYLINDRICAL..	12	EA		1					1	E4	2
P	D		5220-144-2614	83269	<66640>	GAGE,PLUG,PLAIN CYLINDRICAL.. SINGLE END,NO GO,1.1930 IN. OD,W/AIR GROOVE	2	EA		1					1	E62	6
P	D		5220-144-2645	83795	<66640>	GAGE,PLUG,PLAIN CYLINDRICAL..	12	EA		1					1	E84	6
P	D		5220-144-5320	803543	<66640>	GAGE,FLUSH PIN,SPARK PLUG....	12	EA		1					2	E1	5
P	D		5220-144-5321	803544	<66640>	GAGE,FLUSH PIN,SPARK PLUG....	12	EA		1					1	E1	
X1				803544D2	<66640>	.SLEEVE,FLUSH PIN CHECKING...	12	EA		1						E1	
P	D		5220-144-5329	803613	<66640>	GAGE,SNAP,FIXED.....	12	EA		1					1	E21	8
P	D		5220-144-5339	803720	<66640>	GAGE,WEDGE TYPE,PISTON RING.. GROOVE	12	EA		1					2	E2	4
P	D		5220-144-5611	83052	<66640>	GAGE,PLUG,PLAIN CYLINDRICAL.. GO,NO GO,1.3155 IN.OD,W/O AIR GROOVE	12	EA		1					1	E87	
P	D		5220-144-5781	82043	<66640>	GAGE,PLUG,PLAIN CYLINDRICAL..	12	EA		1					1	E62	5
P	D		5220-144-5782	82200	<66640>	GAGE,STRETCH MEASURING.....	12	EA		1					1	E87	2
P	D		5220-144-5880	84757	<66640>	GAGE,RING,MASTER CYLINDER....	12	EA		1					1	E44	6
P	D		5220-202-5263	807831	<66640>	GAGE,PLUG,PLAIN CYLINDRICAL.. DOUBLE END,GO,NO GO,0.769 IN.OD,W/O AIR GROOVE	12	EA		1					1	E19	8
P	D		5220-217-3236	807969	<66640>	GAGE,SNAP.....	12	EA		1					1	E15	
P	D		5220-267-3381	83162	<66640>	GAGE,PLUG,PLAIN CYLINDRICAL.. DOUBLE END,COMBINATION GO, NO GO,1.000 IN.OD,1.001 IN. OD,W/O AIR GROOVE	12	EA		1					1	E87	
P	D		5220-267-3383	82371	<66640>	GAGE,PLUG,PLAIN CYLINDRICAL..	12	EA		1					1	E63	1
P	D		5220-267-3385	801556	<66640>	GAGE,PLUG,PLAIN..... CYLINDRICAL,DOUBLE END,GO, NO GO,0.1385 IN.& 0.1395 IN.DIA	12	EA		1					1	E60	
P	D		5220-267-3386	801555	<66640>	GAGE,PLUG,PLAIN CYLINDRICAL..	12	EA		1					1	E60	4
P	D		5220-267-3392	81479	<66640>	GAGE,PLUG,PLAIN.....	12	EA		1					1	E87	
P	H		5220-267-3394	80433	<66640>	GAGE,PLUG,PLAIN CYLINDRICAL.. DOUBLE END,COMBINATION GO & NO GO,0.6965 IN.& 0.6975 IN.DIA,W/O AIR GROOVE	12	EA		1	1	1	1		3	E5	1
P	D		5220-267-3395	801179	<66640>	GAGE,PLUG,PLAIN CYLINDRICAL.. DOUBLE END,GO NO GO,W/O AIR GROOVE	12	EA		1					1	E19	
P	D		5220-267-3401	806349	<66640>	GAGE,PLUG,PLAIN CYLINDRICAL..	12	EA		1					1	E37	
P	D		5220-267-3405	803750	<66640>	GAGE,PLUG,PLAIN CYLINDRICAL..	12	EA		1					1	E87	
P	D		5220-267-3413	807938	<66640>	GAGE,PLUG,PLAIN CYLINDRICAL..	12	EA		1					1	E76	1
P	D		5220-267-4830	803078	<66640>	GAGE,PLUG,PLAIN CYLINDRICAL..	12	EA		1					1	E87	
P	D		5220-267-4831	802206	<66640>	GAGE,PLUG,PLAIN CYLINDRICAL.. GO,NO GO,1.1915 IN.OD,W/O AIR GROOVE	12	EA		1					1	E87	
P	D		5220-267-4842	802565	<66640>	GAGE,PLUG,PLAIN CYLINDRICAL..	1	EA		1					*	E29	

(1) SOURCE, MAINT AND REC CODE (a) SOURCE CODE	(b) MAINT LEVEL	(c) REC CODE	(2) FEDERAL STOCK NUMBER	REFERENCE NUMBER	(3) DESCRIPTION	MODELS USABLE ON CH-34C	(4) UNIT OF ISSUE	(5) QTY INC IN UNIT PACK	(6) QTY INC IN UNIT	(7) 30-DAY DS/GS MAINT ALW (a) 1-20	(b) 21-50	(c) 51-100	(8) 1-YR ALW PER 100 EQUIP CNTGCY	(9) DEPOT MAINT ALW PER 100 EQUIP	(10) ILLUSTRATION (a) FIG NO	(b) ITEM NO
P	D		5220-273-0274	808889 <66640>	GAGE,PLUG,PLAIN CYLINDRICAL.. DOUBLE END,COMBINATION GO, NO GO,1.509 IN.OD,W/O AIR GROOVE	12	EA		1					1	E87	
P	D		5220-278-1015	803242 <66640>	GAGE,PLUG,PLAIN CYLINDRICAL.. DOUBLE END,COMBINATION GO, NO GO GAGE,0.624 IN.OD	12	EA		1					1	E60	5
P	D		5220-278-1051	807937 <66640>	GAGE,PLUG,PLAIN CYLINDRICAL..	12	EA		1					1	E54	4
P	D		5220-278-1052	807939 <66640>	GAGE,PLUG,PLAIN CYLINDRICAL..	12	EA		1					1	E4	
P	D		5220-278-1478	807607 <66640>	GAGE,PLUG,PLAIN CYLINDRICAL..										E87	
P	D		5220-278-1479	807608 <66640>	GAGE,PLUG,PLAIN CYLINDRICAL..	12	EA		1					1	E87	
P	D		5220-289-8515	807661 <66640>	GAGE.....	12	EA		1					1	E74	
P	D		5220-289-8516	807660 <66640>	GAGE,RING,PLAIN-GO GAGE,..... SURFACE DIM,1.1560 IN.ID	12	EA		1					1	E74	3
P	D		5220-289-8517	807659 <66640>	GAGE,MASTER RING.....	12	EA		1	*	*	*		1	E29A	
P	D		5220-289-8518	807663 <66640>	GAGE,RING.....	12	EA		1					1	E75	
P	D		5220-289-8519	807662 <66640>	GAGE,RING.....	12	EA		1					1	E74	5
P	D		5220-316-6683	801614 <66640>	GAGE,PLUG,PLAIN CYLINDRICAL..	12	EA		1					*	E49	
P	D		5220-320-8158	807635 <66640>	GAGE,SNAP,FIXED-SINGLE END,.. GO,6.500 IN.O/A LG	12	EA		1					1	E15	
P	D		5220-335-0158	808552 <66640>	GAGE,INTAKE AND EXHAUST VALVE	12	EA		1					1	E78	3
P	D		5220-440-8063	802857 <66640>	GAGE,PLUG,PLAIN CYLINDRICAL.. DOUBLE END,COMBINATION GO, NO GO,0.947 IN.OD,W/O AIR GROOVE	2	EA		1					1	E87	
P	D		5220-440-8065	802859 <66640>	GAGE,PLUG,PLAIN CYLINDRICAL.. DOUBLE END,COMBINATION,GO, NO GO,0.947 IN.OD,W/O AIR GROOVE	1	EA		1					1	E87	
P	D		5220-440-8066	802860 <66640>	GAGE,PLUG,PLAIN CYLINDRICAL.. GO,NO GO,0.972 IN.OD,0.973 IN.OD	12	EA		1					1	E37	4
P	D		5220-440-8067	802861 <66640>	GAGE,PLUG,PLAIN CYLINDRICAL.. DOUBLE END,COMBINATION,GO, NO GO,0.978 IN.OD,W/O AIR GROOVE	12	EA		1					1	E87	
P	D		5220-440-8068	802862 <66640>	GAGE,PLUG,PLAIN CYLINDRICAL..	12	EA		1					1	E87	
P	D		5220-440-8069	802863 <66640>	GAGE,PLUG,PLAIN CYLINDRICAL..	12	EA		1					1	E87	
P	D		5220-440-8070	802864 <66640>	GAGE,PLUG,PLAIN CYLINDRICAL.. DOUBLE END,GO,NO GO,1.007 IN.OD,W/O AIR GROOVE,W/LONG GO END,2-1/16 IN.LG	12	EA		1					1	E87	
P	D		5220-440-8155	803980 <66640>	GAGE,PLAIN,PLUG CYLINDRICAL..	12	EA		1					1	E20	8
P	D		5220-440-8238	804966 <66640>	GAGE,PLUG,PLAIN CYLINDRICAL.. DOUBLE END,COMBINATION GO, NO GO,1.192 IN.OD,1.193 IN. OD,W/O AIR GROOVE	12	EA		1					1	E87	
P	D		5220-440-8239	804967 <66640>	GAGE,PLUG,PLAIN CYLINDRICAL.. DOUBLE END,COMBINATION GO, NO GO,1.197 IN.OD,1.198 IN. OD,W/O AIR GROOVE	12	EA		1					1	E87	
P	D		5220-440-8335	805491 <66640>	GAGE,PLUG,PLAIN CYLINDRICAL	12	EA		1					1	E48	

(1) SOURCE, MAINT AND REC CODE (a) SOURCE CODE	(b) MAINT LEVEL	(c) REC CODE	(2) FEDERAL STOCK NUMBER	REFERENCE NUMBER	(3) DESCRIPTION	MODELS USABLE ON CH-34C	(4) UNIT OF ISSUE	(5) QTY INC IN UNIT PACK	(6) QTY INC IN UNIT	(7) 30-DAY DS/GS MAINT ALW (a) 1-20	(b) 21-50	(c) 51-100	(8) 1-YR ALW PER 100 EQUIP CNTGCY	(9) DEPOT MAINT ALW PER 100 EQUIP	(10) ILLUSTRATION (a) FIG NO	(b) ITEM NO
					CONTINUED DOUBLE END,COMBINATION GO, NO GO,DIM,1.016 IN.OD,1.017 IN.OD,W/O AIR GROOVE										E48	
P	D		5220-440-8394	805685 <66640>	GAGE,PLUG,PLAIN CYLINDRICAL.. DOUBLE END,COMBINATION GO, NO GO,1.017 IN.OD,1.018 IN. OD,2-1/16 IN.LG,W/O AIR GROOVE	12	EA		1					1	E87	
P	D		5220-440-8396	805687 <66640>	GAGE,PLUG,PLAIN CYLINDRICAL..	12	EA		1					1	E7	8
P	D		5220-440-8400	805691 <66640>	GAGE,PLUG,PLAIN CYLINDRICAL..	12	EA		1					1	E7	
P	D		5220-440-8645	806350 <66640>	GAGE,PLUG,PLAIN CYLINDRICAL..	12	EA		1					1	E87	
			5220-440-8793	806773 <66640>	GAGE,INTAKE VALVE SEAT..USE.. UNTIL EXHAUSTED,NO REPLACEMNT	12	EA		1						E44	2
P	D		5220-490-7013	804398 <66640>	GAGE,EXHAUST VALVE.....										E86	4
P	D		5220-490-7060	805710 <66640>	GAGE,ROCKER HUB BOLT.....	12	EA		1					1	E70	
P	D		5220-490-7099	805905 <66640>	GAGE,SPARK PLUG FOCING.....	12	EA		1					1	E71	1
P	D		5220-490-7194	806625 <66640>	GAGE,ROCKER ARM PIN.....	12	EA		1					1	E71	4
P	D		5220-490-7212	806769 <66640>	GAGE,PLUG,PLAIN,CYLINDRICAL.. DOUBLE END,GO,NO GO,W/O AIR GROOVE	12	EA		1					1	E12	6
P	D		5220-506-8108	807627 <66640>	GAGE,CYLINDER EXHAUST VALVE..	12	EA		1					1	E16	
P	D		5220-529-2800	808885 <66640>	GAGE,PLUG,PLAIN CYLINDRICAL.. DOUBLE END,COMBINATION GO, NO GO,1.08350 IN.OD,1.08450 IN.OD,W/O AIR GROOVE	12	EA		1					1	E87	
P	H		5220-529-2801	808402 <66640>	GAGE,RING,PLAIN.....	12	EA		1	*	*	*		1	E77	
P	D		5220-540-0838	808892 <66640>	GAGE,PLUG,PLAIN CYLINDRICAL.. GO,NO GO,1.0827 IN.OD	12	EA		1					1	E87	
P	D		5220-546-3972	82664 (66640)	GAGE,PLUG,INTAKE AND EXHAUST.	12	EA		1						E87	5
P	D		5220-560-0774	808883 <66640>	GAGE,SNAP,FIXED-STEEL..... FRAME COMBINATION GO,NO GO, 1.518 IN.H,5.500 O/A LG	12	EA		1					1	E30	7
	D															
P	D		5220-560-0775	808893 <66640>	GAGE,SNAP,FIXED-DOUBLE..... ENGAGEMENT,STEEL FRAME AND ANVILS,GO NO GO,4.313 IN. O/A LG	12	EA		1					1	E79	5
P	D		5220-568-0472	807622 <66640>	GAGE,CYLINDER EXHAUST VALVE.. GUIDE HOLE,CHAMFERING & BOSS FACING,CUTTER SETTING	12	EA		1					1	E16	

(1) SOURCE, MAINT AND REC CODE (a) SOURCE CODE	(b) MAINT LEVEL	(c) REC CODE	(2) FEDERAL STOCK NUMBER	(3) DESCRIPTION REFERENCE NUMBER			MODELS USABLE ON CH-34C	(4) UNIT OF ISSUE	(5) QTY INC IN UNIT PACK	(6) QTY INC IN UNIT	(7) 30-DAY DS/GS MAINT ALW (a) 1-20	(b) 21-50	(c) 51-100	(8) 1-YR ALW PER 100 EQUIP CNTGCY	(9) DEPOT MAINT ALW PER 100 EQUIP	(10) ILLUSTRATION (a) FIG NO	(b) ITEM NO
P	D		5220-568-0474	807624	<66640>	GAGE,CYLINDER EXHAUST VALVE.. GUIDE HOLE,CHAMFERING & BOSS FACING,CUTTER SETTING	12	EA		1					1	E16	
P	H		5220-572-7205	808403	<66640>	GAGE,RING,PLAIN-SINGLE..... RING,0.7595 IN.ID	12	EA		1	*	*	*		1	E77	
P	H		5220-572-7206	808404	<66640>	GAGE MASTER RING.....	12	EA		1	*	*	*		1	E77	
P	H		5220-572-7207	808405	<66640>	GAGE,RING,PLAIN-SINGLE..... RING,GO GAGE	12	EA		1	*	*	*		1	E77	
P	D		5220-573-3620	805710-1	<66640>	BODY,FLUSH PIN DEPTH GAGE....	12	EA		1					1	E70	
P	D		5220-588-6028	809109	<66640>	GAGE,CRANKSHAFT,FLATNESS..... 2-1/2 IN.LG,3/4 IN.W,3/8 IN.THK	2	EA		1					3	E22	2
P	D		5220-595-4768	807606	<66640>	GAGE,PLUG,PLAIN CYLINDRICAL.. DOUBLE END,GO,NO GO,1.047 IN.OD,W/O AIR GROOVE	12	EA		1					1	E87	
P	D		5220-640-1484	80861	<66640>	GAGE,PLUG,PLAIN CYLINDRICAL..	12	EA		1					1	E78	
P	D		5220-640-1485	808063	<66640>	GAGE,PLUG,PLAIN CYLINDRICAL.. DOUBLE END,COMBINATION GO	12	EA		1					1	E76	
P	D		5220-640-1486	808062	<66640>	GAGE,PLUG,PLAIN CYLINDRICAL.. DOUBLE END,COMBINATION GO	12	EA		1					1	E76	5
P	D		5220-651-7849	809034	<66640>	GAGE,CRANKCASE.....	12	EA		1					1	E80	3
P	D		5220-654-9104	808935	<66640>	GAGE,RING BEARING.....	12	EA		1					1	E80	1
P	D		5220-677-2854	809633	<66640>	GAGE,SNAP,FIXED.....	12	EA		1					1	E81	5
P	D		5220-770-0051	800130	<66640>	GAGE,CYLINDER-HOLD DOWN CAP.. SCREW HOLE THD	1	EA		1					2	E32	8
P	D	R	5220-780-4419	809836	<66640>	GAGE.....	12	EA		1					1	E61	5
P	D	R	5220-780-4420	809842	<66640>	GAGE.....	12	EA		1					1	E62	3
P	D		5220-789-7835	809311	<66640>	GAGE,DEPTH CHECKING.....	12	EA		1					1	E43	5
P	D		5220-859-6245	810083	<66640>	GAGE,THREADED PLUG-0.968..... IN.DIA GO END,0.969 IN.DIA NO GO END	12	EA		1					3	E26	2
P	D		5220-859-6246	810085	<66640>	GAGE,THREADED PLUG.....	12	EA		1					3	E26	
P	D		5220-859-6247	810084	<66640>	GAGE,THREADED PLUG-0.983..... IN.DIA GO END,0.984 IN.DIA NO GO END	12	EA		1					3	E26	
P	D		5220-861-1591	810130	<66640>	GAGE,RING,PLAIN-SINGLE RING,. GO GAGE,1.150 IN.DIA	12	EA		1					1	E26	3
P	D		5220-861-1594	810138	<66640>	GAGE,RING,MASTER ROD..... KNUCKLE PIN BORE CHECKING	12	EA		1					1	E26	
P	D		5220-963-1113	809198	<66640>	GAGE,PLUG,FLAT.....	12	EA		1					1	E80	4
P	D	R	5280-490-6944	800641	<66640>	GAGE SET,CYLINDER BORE.....	12	EA		1					1	E1	3
P	D		5306-275-9901	810367	<66640>	BOLT,ADJUSTING.....	1	EA		1					1	E84	
P	D		5307-012-9139	83819D5	<66640>	STUD.....	12	EA		1					1	E85	1
P	F		5315-328-5885	806533	<66640>	PIN,SHOULDER,HEADLESS.....	12	EA		1	1	1	1		36	E11	4
P	D		5330-624-5393	808581D2	<66640>	RING.....	12	EA		1					1	E30A	
P	D		5340-290-7229	808400D6	<66640>	CAP-PLUG,PROTECTIVE-CAP LUG.. NO.53	1	EA		1	*	*	*		1	E18	7
P	D		5340-528-6727	807610	<66640>	SPACER,SLEEVE-SPLIT..... OPTIONAL,1.093 IN.MIN ID,	12	EA		1					2	E16	5

(1) SOURCE, MAINT AND REC CODE (a) SOURCE CODE	(b) MAINT CODE	(c) REC CODE	(2) FEDERAL STOCK NUMBER	REFERENCE NUMBER		(3) DESCRIPTION	MODELS USABLE ON CH-34C	(4) UNIT OF ISSUE	(5) QTY INC IN UNIT PACK	(6) QTY INC IN UNIT	(7) 30-DAY DS/GS MAINT ALW (a) 1-20	(b) 21-50	(c) 51-100	(8) 1-YR ALW PER 100 EQUIP CNTGCY	(9) DEPOT MAINT ALW PER 100 EQUIP	(10) ILLUSTRATION (a) FIG NO	(b) ITEM NO
						CONTINUED 1.156 IN.MAX ID.,.468 IN. MIN OD,1.531 IN.MAX OD, 0.468 IN.MIN THK,0.531 IN. MAX THK										E16	5
P	F	R	8115-018-5329	8115CON009-1	<81996>	SHIPPING AND STORAGE..... CONTAINER,ENGINE RPLS-- 8115-390-5565	12	EA		1	*	*	*		1	E28	9
		R	8115-390-5562	J105WC7C9	<92144>	SHIPPING AND STORAGE..... CONTAINER,ENGINE-STEEL, ENAMELED FINISH,DESIGNED FOR MTG THE ENGINE W/ITS LONGITUDINAL AXIS PERPENDICULAR TO THE BASE, 62-1/2 IN.DIA,66-1/2 IN.H, W/1 WINDOW USE UNTIL EXHAUSTED,NO REPLACEMENT	12	EA		1						E28	
		R	8115-390-5565		<31349>	SHIPPING AND STORAGE..... CONTAINER,ENGINE-ENAMELED FINISH,CYLINDRICAL,DESIGNED FOR MTG THE ENGINE W/ITS LONGITUDINAL AXIS PERPENDICULAR TO THE BASE, 62-1/4 IN.DIA,66-1/4 IN.H, W/1 WINDOW,NOT DESIGNED FOR HERMETIC SEALING, MIL-C5584A RPL-BY 8115-018-5329	12									E92	
AD	D			801930	<66640>	CUTTER,COUNTERBORE.....	12	EA		1					*	E28A	
MD	D			802837	<66640>	STAND,WOOD ASSEMBLY.....	12	EA		1					*	E6	2
MD	D			80292	<66640>	HANDLE,TURNING TOOL,..... CRANKSHAFT U/W 4920-544-1119	1	EA		1					*	E37	
AF	F			804439	<66640>	TOOL,REMOVING-FUEL PUMP &.... TACHOMETER DRIVE SHAFT OIL SEAL	12	EA		1	*	*	*		*	E5	
MD	D			804964	<66640>	COLLAR.....	12	EA		1					*	E3	
MD	D			805144	<66640>	PLUG,CRANKSHAFT.....	12	EA		1					*	E64	6
MD	D			806645	<66640>	JIG,DRILL.....	12	EA		1					*	E72	1
MF	F			807049	<66640>	COVER,SUPERCHARGER FRONT..... SECTION-SUMP PAD,BLOCK, 2-3/8 IN.SQ,1-3/16 IN.H	12	EA		1	*	*	*		*	E14	3
MD	D			807755	<66640>	TOOL,BENDING.....	12	EA		1					*	E95	5
AD	D			808703	<66640>	DRESSER,WHEEL.....	12	EA		1					*	E50	5
P	D		5120-034-3782	808703D1	<66640>	.DRESSER,WHEEL.....	12	EA		1					1	E50	
P	D		6650-034-3783	808703D2	<66640>	.FIXTURE.....	12	EA		1					1	E50	
P	D		5120-034-3784	808703D3	<66640>	.HOLDER,NIB,DIAMOND.....	12	EA		1					1	E50	
AD	D			808764	<66640>	PULLER.....	12	EA		1					*	E39	
AD	D			810029	<66640>	PLUG,LOCATING.....	12	EA		1					*	E24	7

(1) SOURCE, MAINT AND REC CODE (a) SOURCE CODE	(b) MAINT LEVEL	(c) REC CODE	(2) FEDERAL STOCK NUMBER	(3) DESCRIPTION REFERENCE NUMBER			MODELS USABLE ON CH-34C	(4) UNIT OF ISSUE	(5) QTY INC IN UNIT PACK	(6) QTY INC IN UNIT	(7) 30-DAY DS/GS MAINT ALW (a) 1-20	(b) 21-50	(c) 51-100	(8) 1-YR ALW PER 100 EQUIP CNTGCY	(9) DEPOT MAINT ALW PER 100 EQUIP	(10) ILLUSTRATION (a) FIG NO	(b) ITEM NO
P	D		4920-983-2470	810029D1	<66640>	.LOCATING PLUG.....	12	EA		1					1	E24	
P	D		4920-983-2465	810029D2	<66640>	.LOCATING PLUG.....	12	EA		1					1	E24	
AD	D			810301	<66640>	PULLER,MECHANICAL.....	12	EA		1					*	E65	
				810310	<66640>	GAGE,PISTON RING GROOVE..... SECOND RING GROOVE,0.002 IN.TO 0.020 IN.CLEARANCE	12	EA		1					*	E27	
				810450	<66640>	GAGE.....	1	EA		1					*	E59	6
MD	D			83802	<66640>	DRILL.....	2	EA		1					*	E30A	
AF	F			923067	<66640>	PULLER,CRANKCASE MAIN SECTION ROCKER ARM HUB BOLT	2	EA		1	*	*	*		*	E90	1
AD	D			923541	<66640>	PULLER ASSEMBLY,CRANKSHAFT...	12	EA		1					*	E69	
AD	D			923557	<66640>	PULLER ASSEMBLY,CRANKSHAFT...	12	EA		1					*	E42	

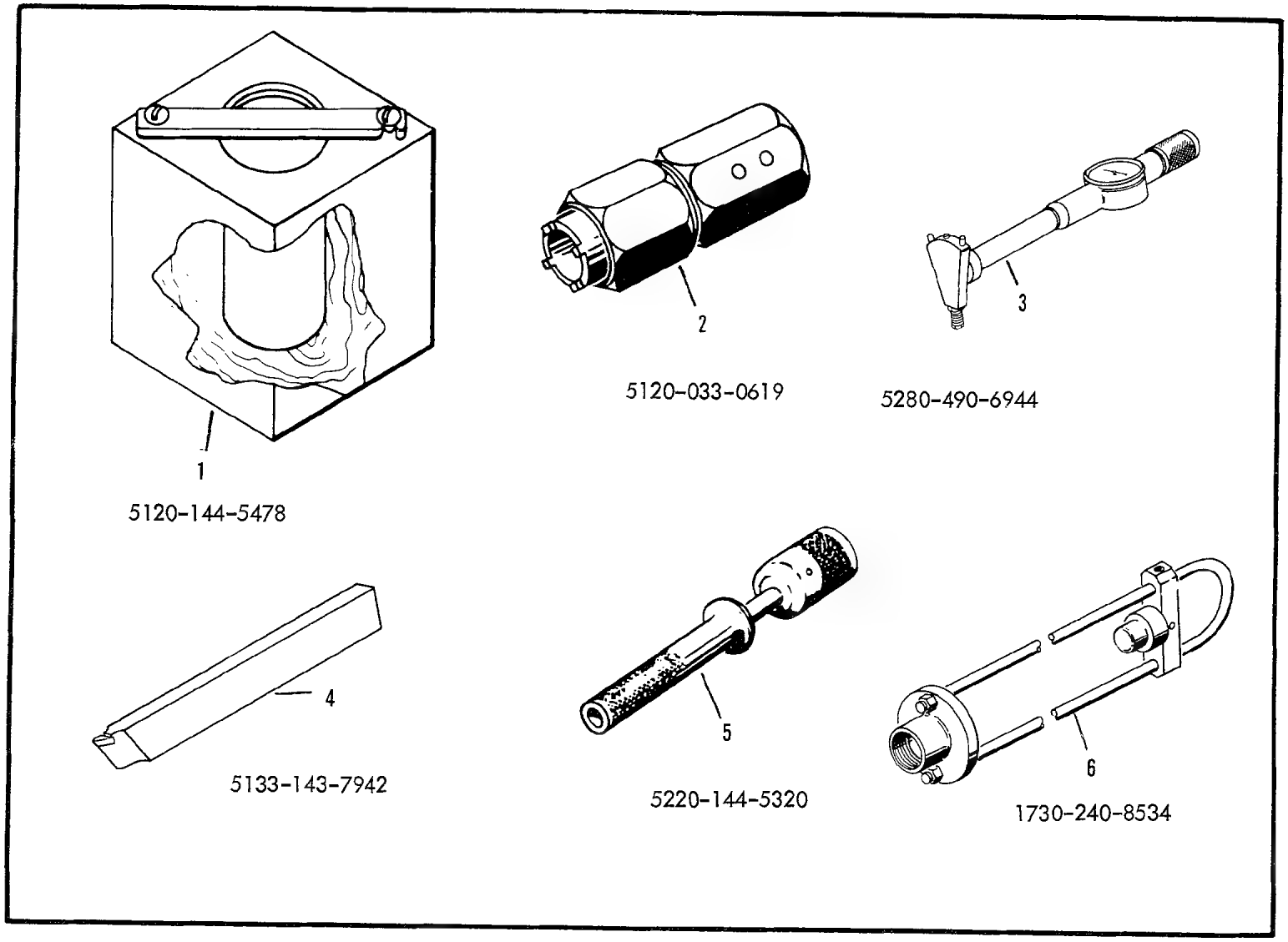

Figure E1. Engine Tools

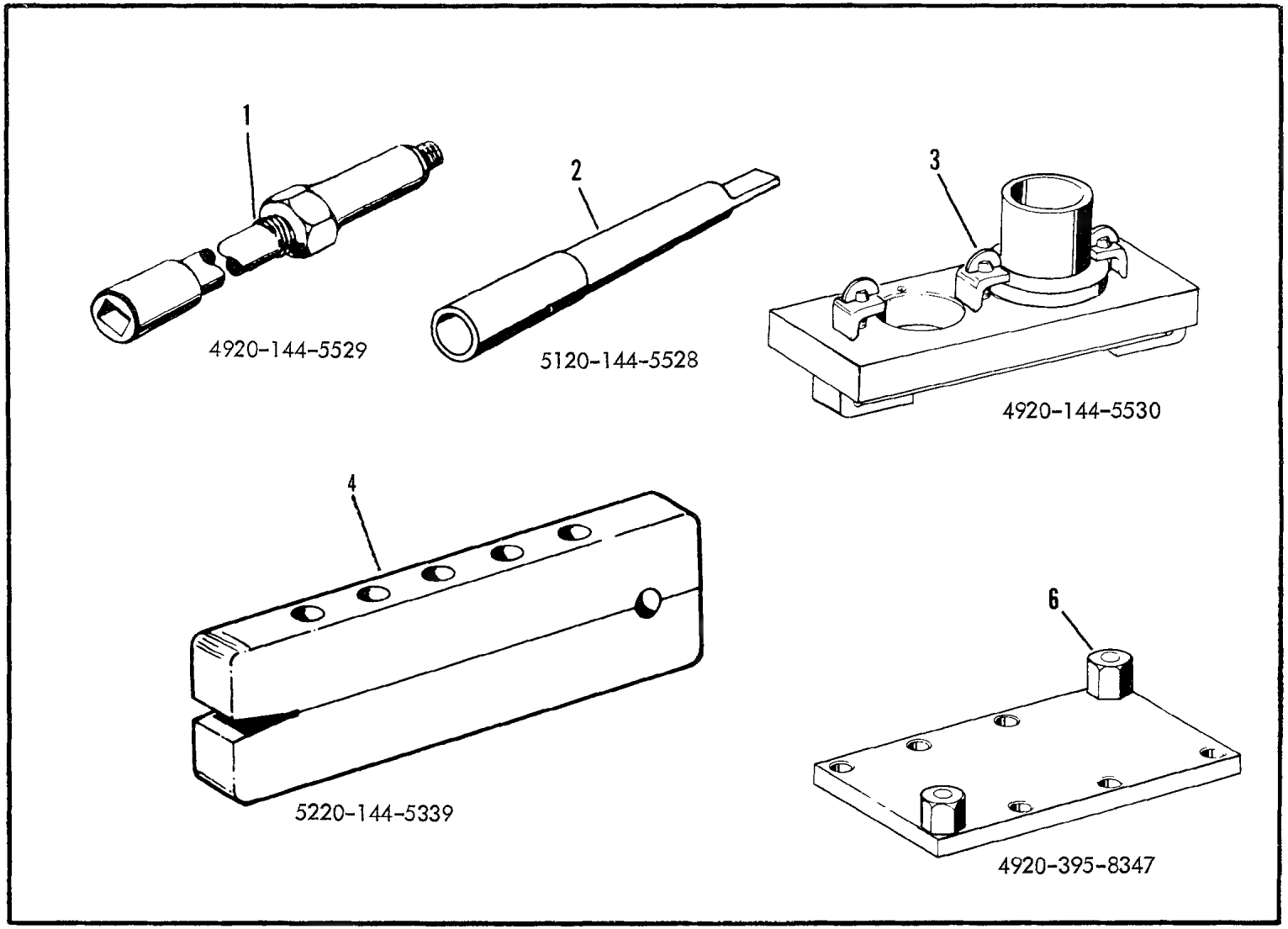

Figure E2. Engine Tools

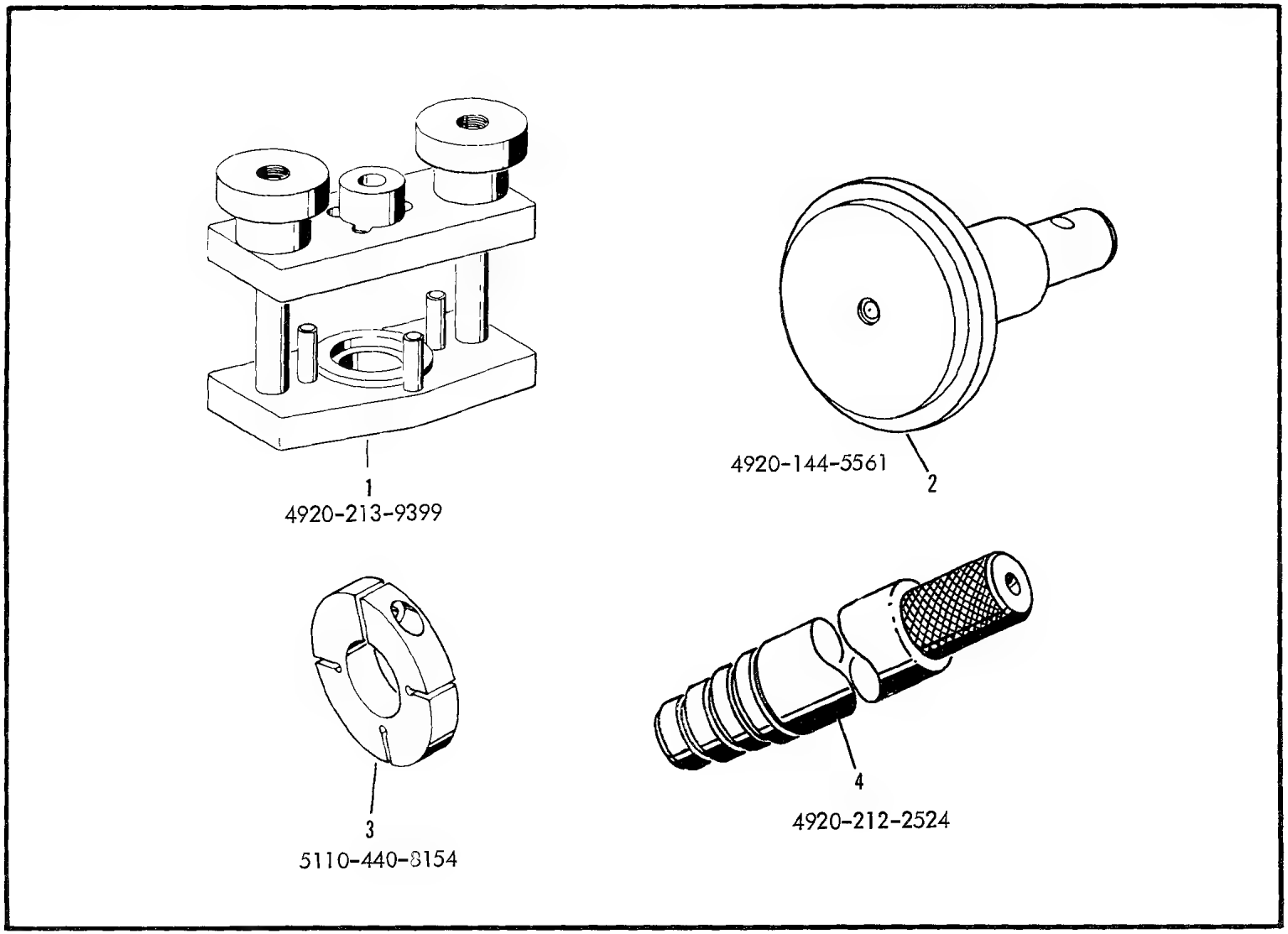

Figure E3. Engine Tools

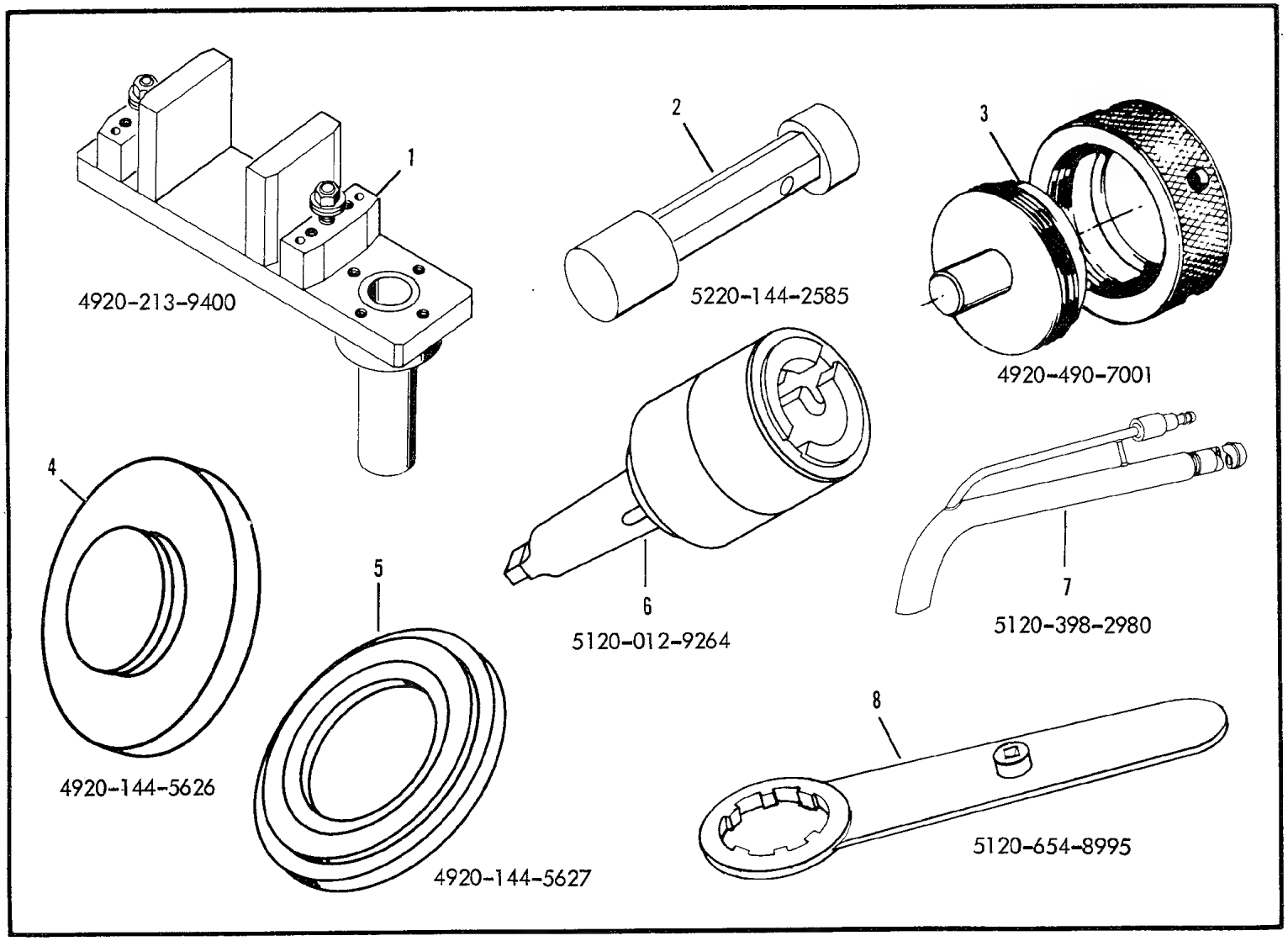

Figure E4. Engine Tools

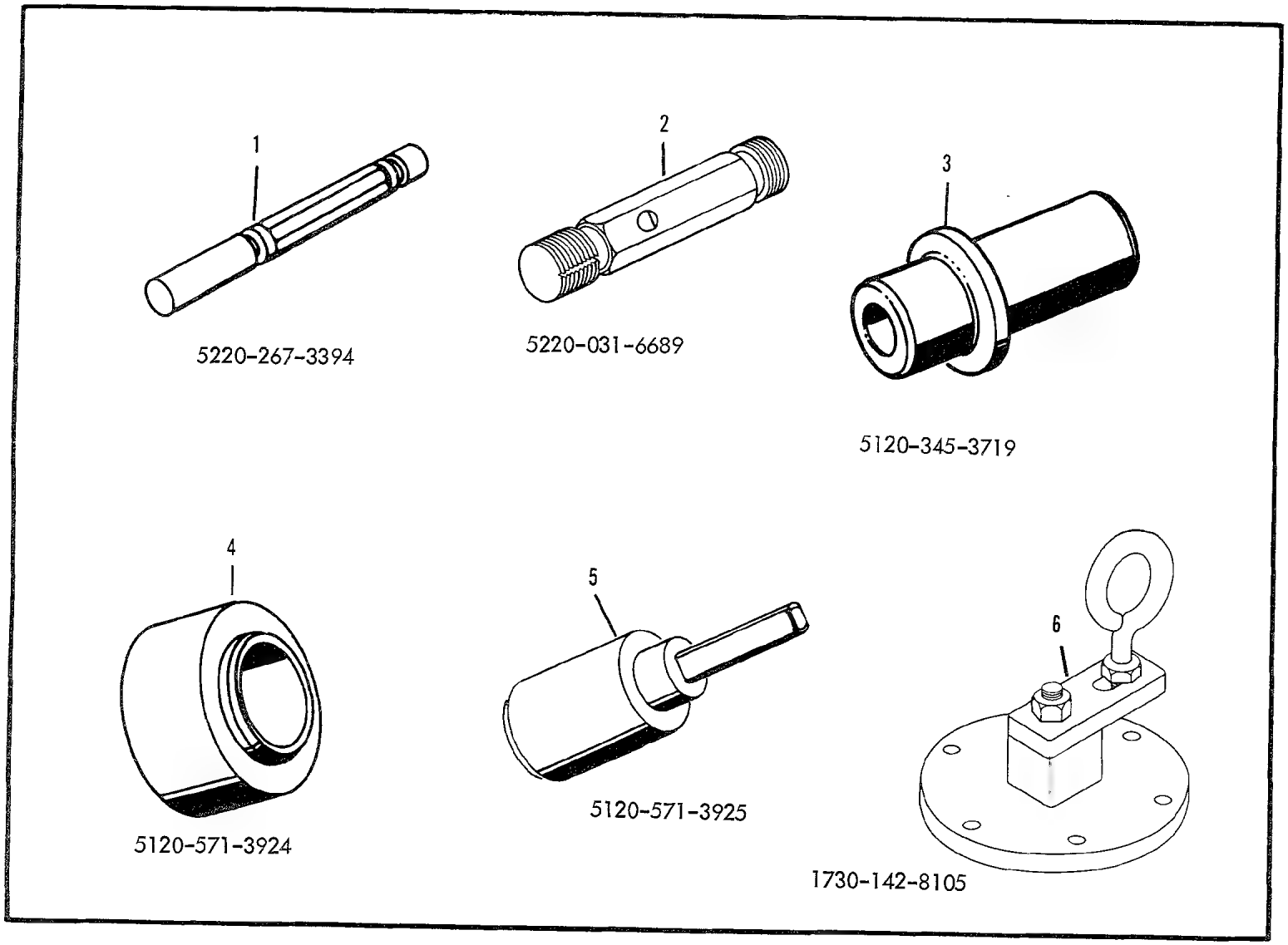

Figure E5. Engine Tools

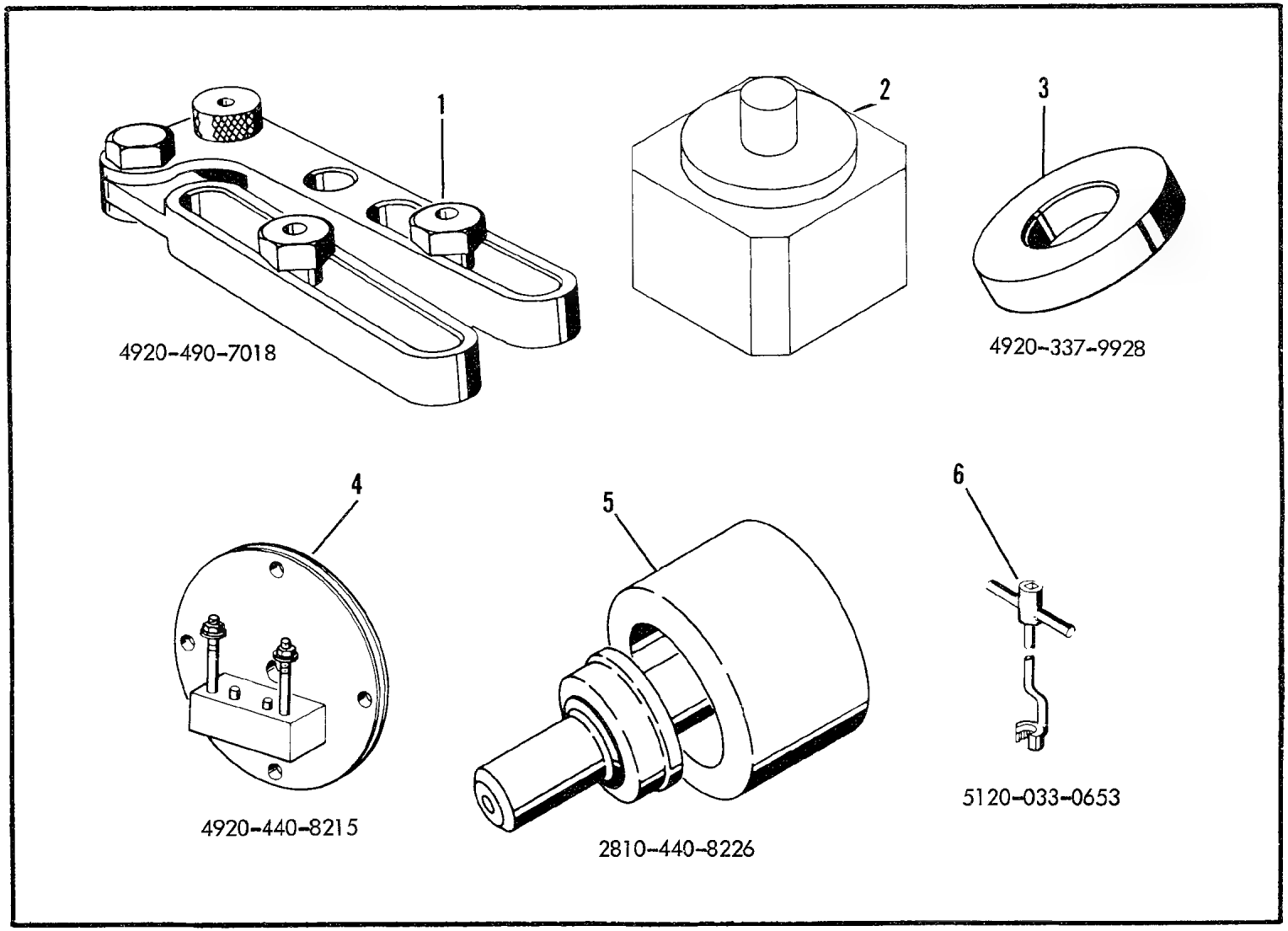

Figure E6. Engine Tools

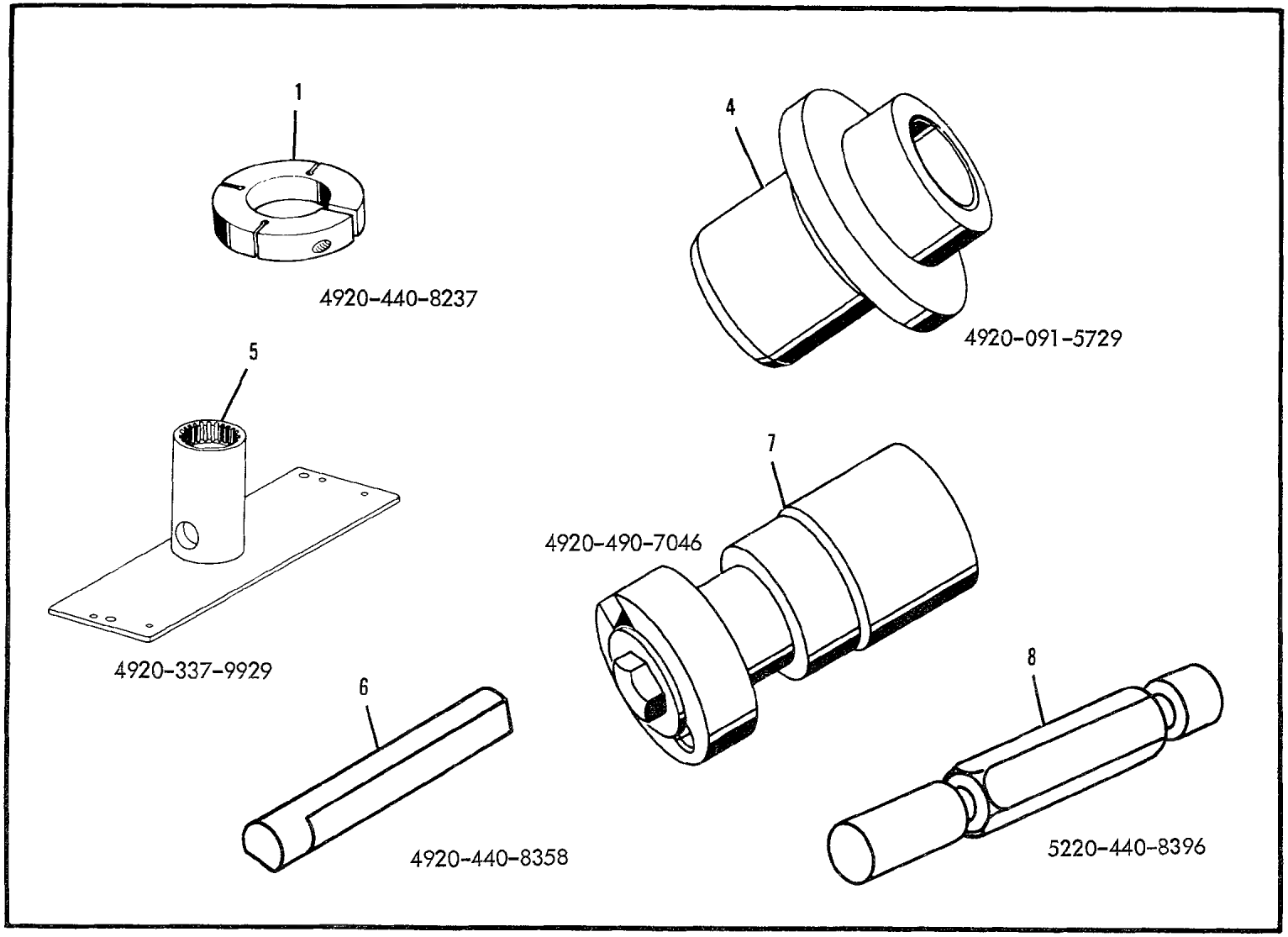

Figure E7. Engine Tools

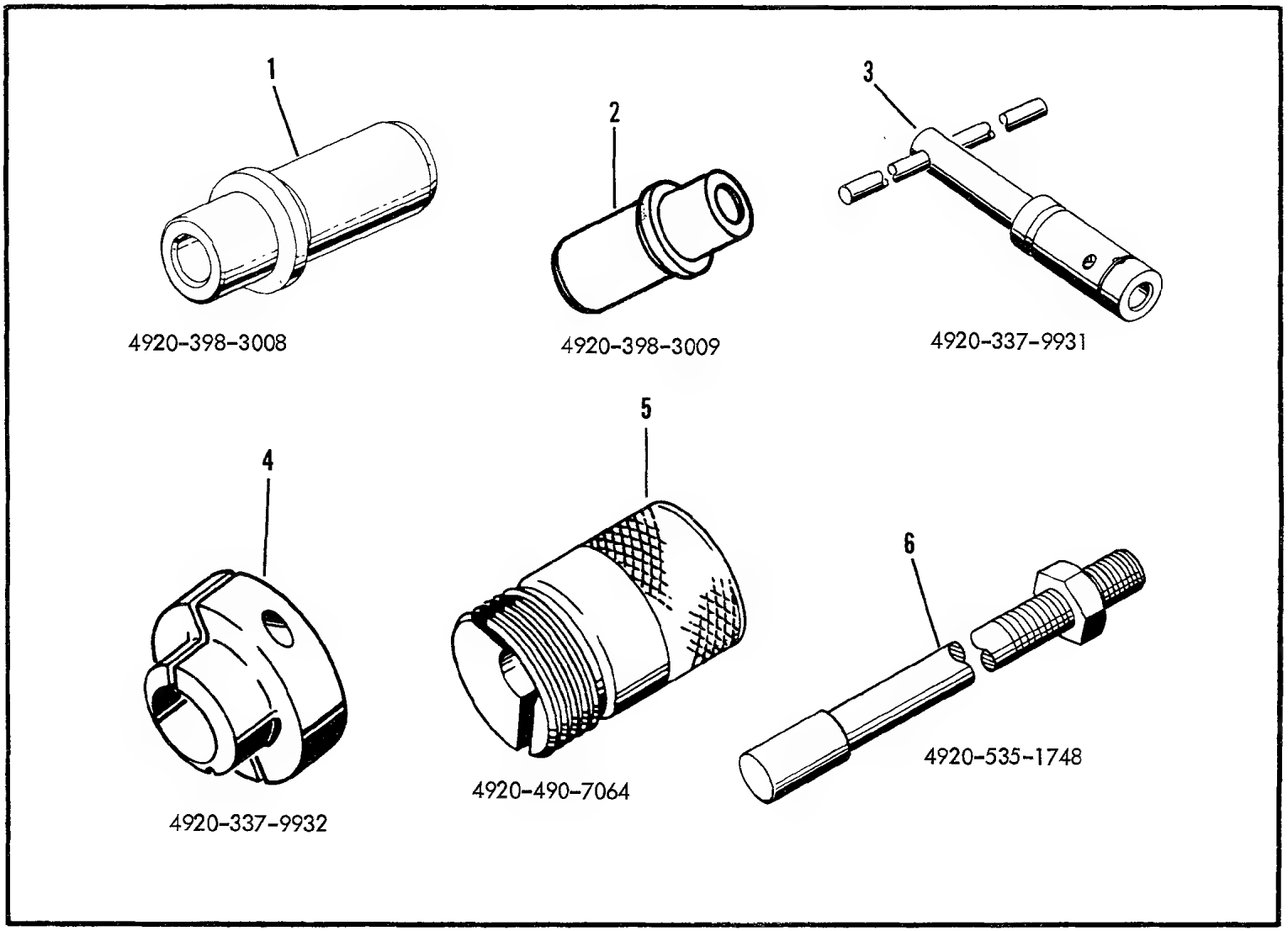

Figure E8. Engine Tools

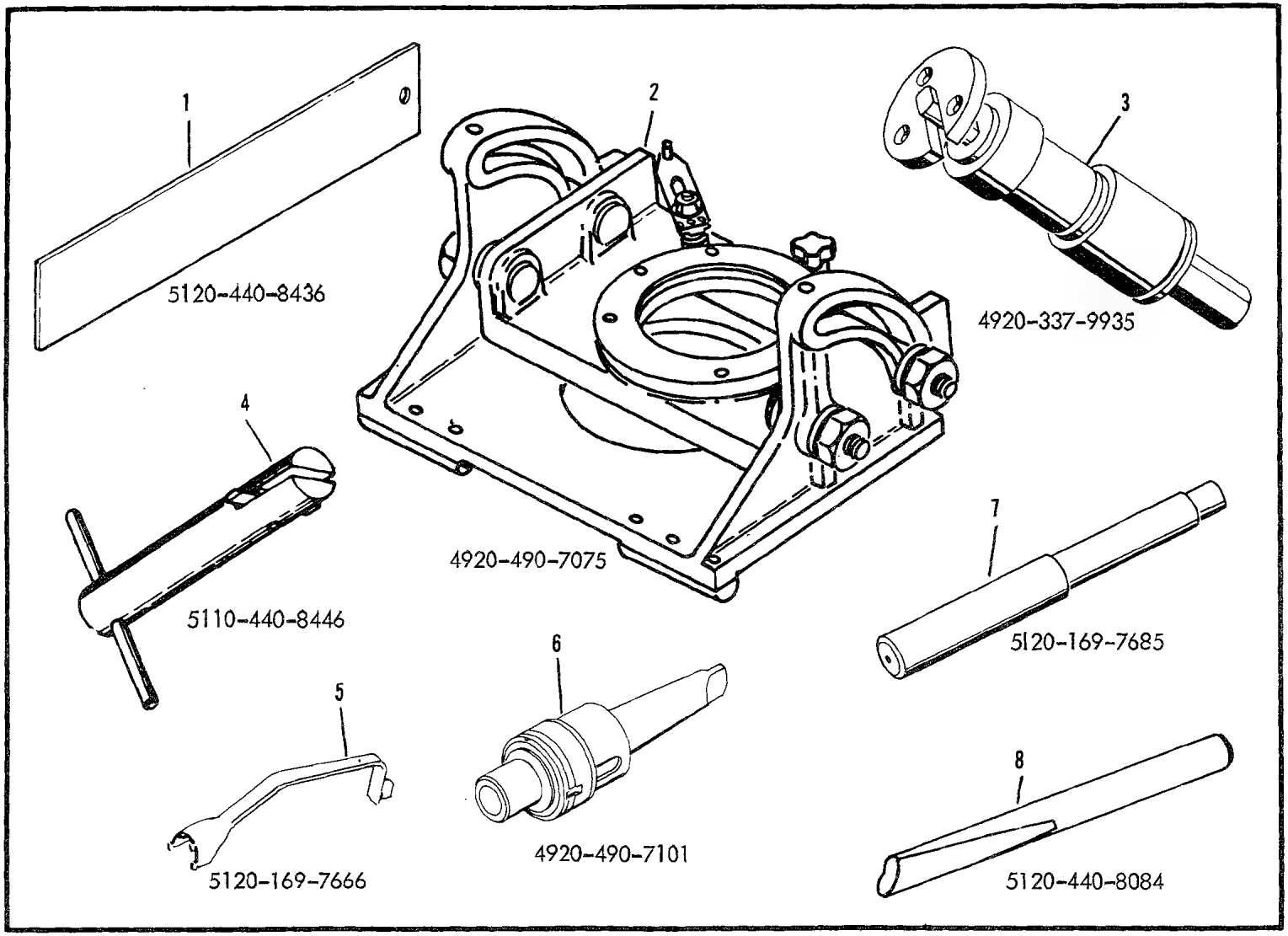

Figure E9. Engine Tools

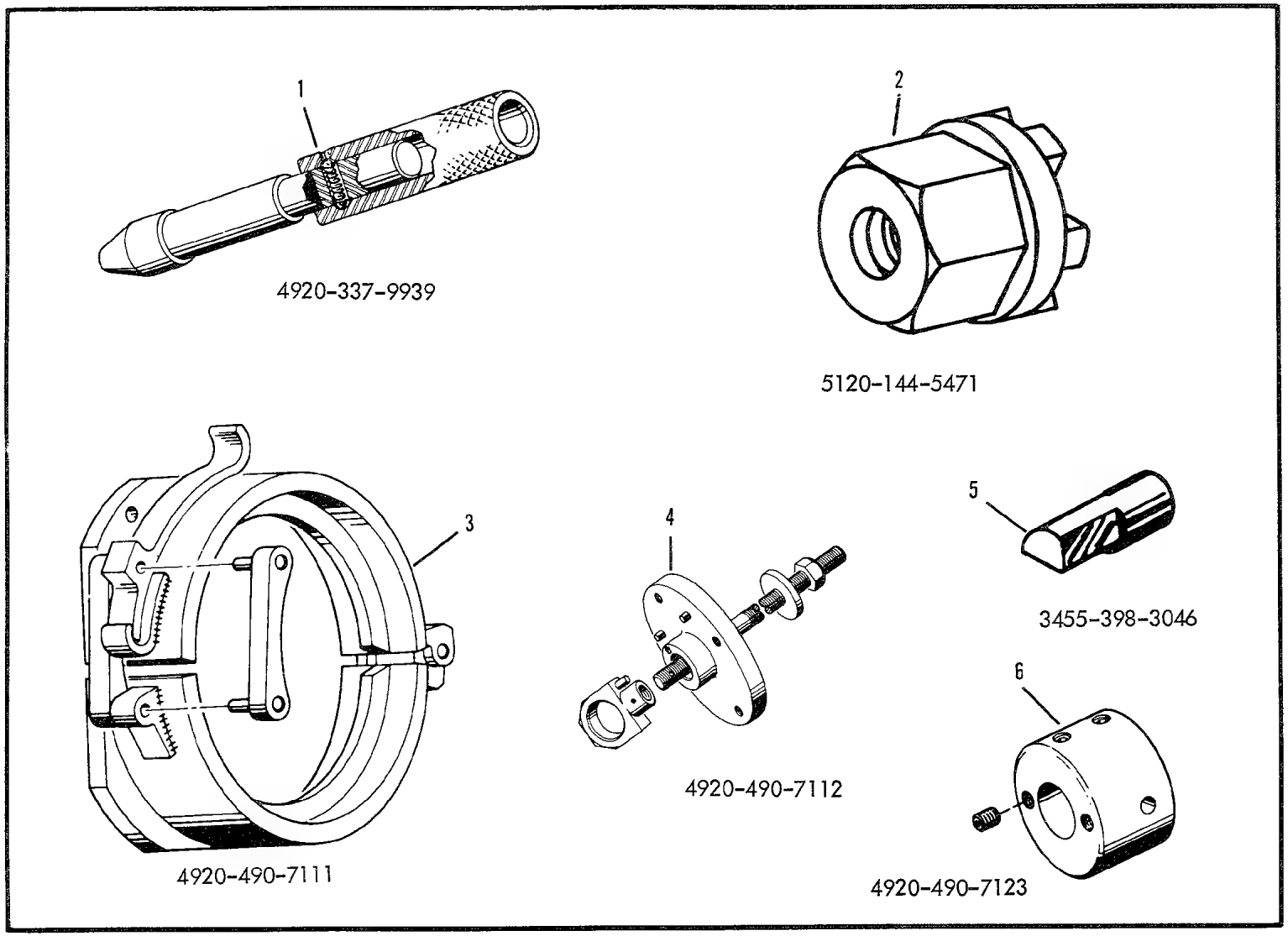

Figure E10. Engine Tools

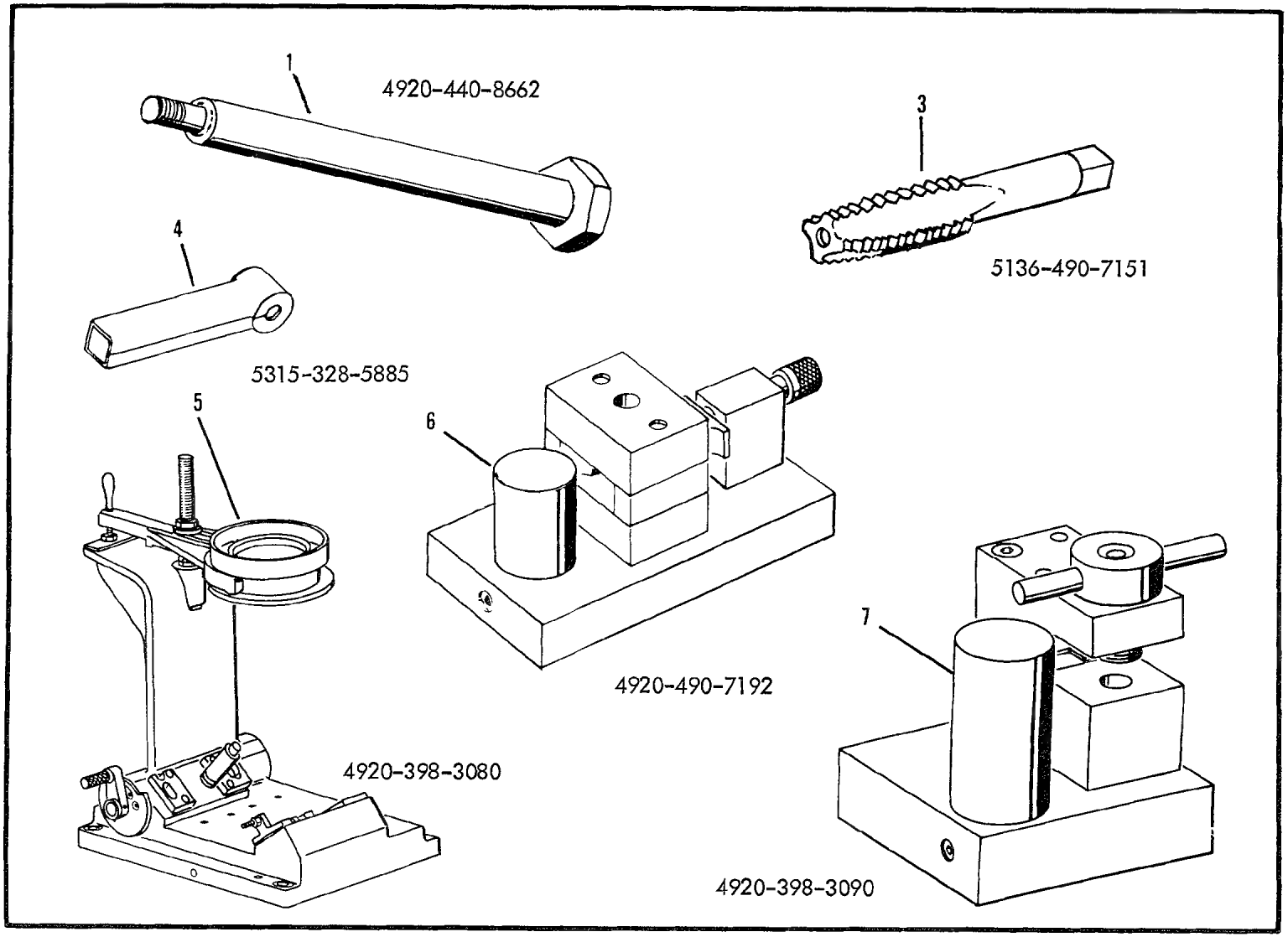

Figure E11. Engine Tools

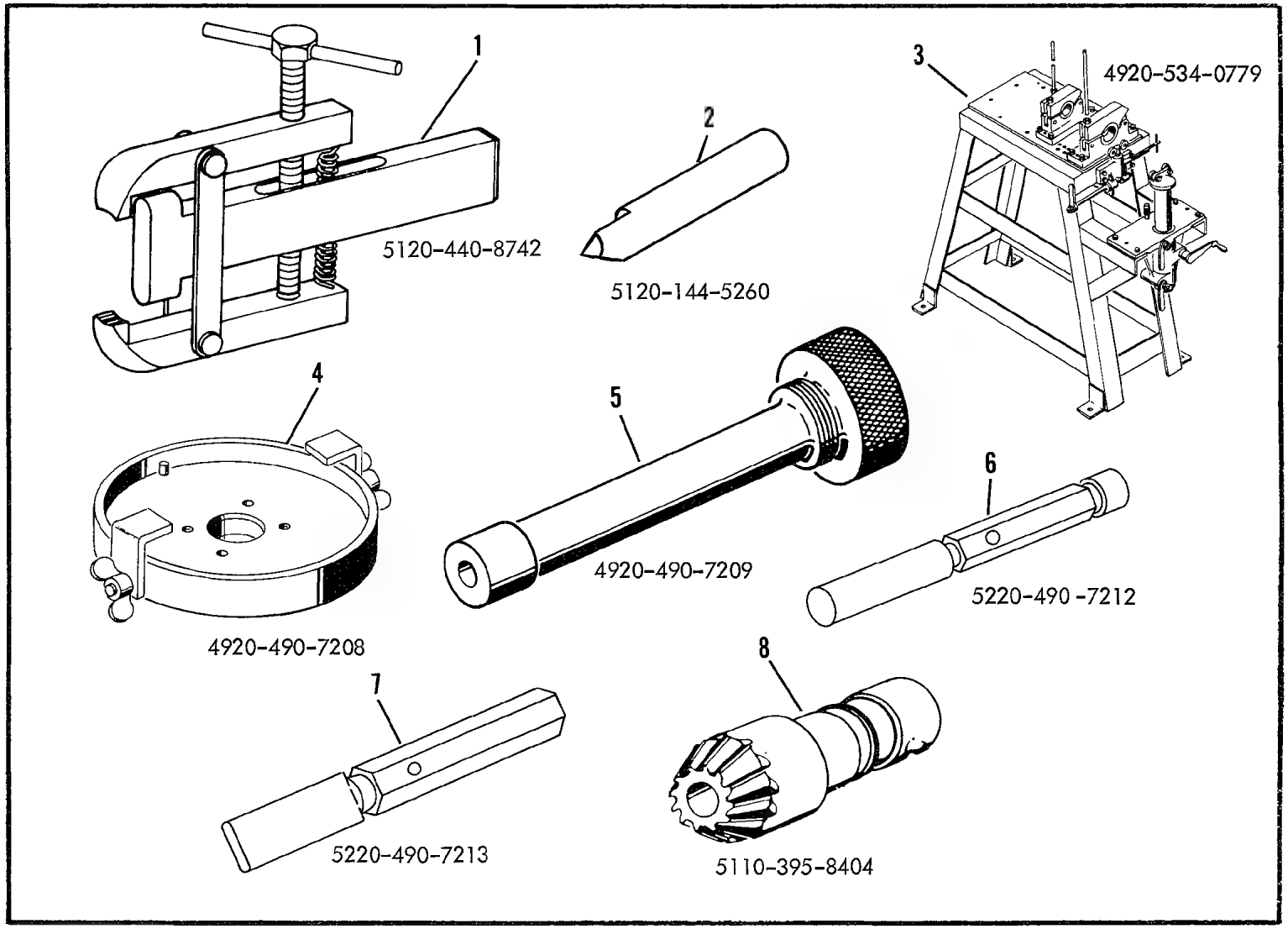

Figure E12. Engine Tools

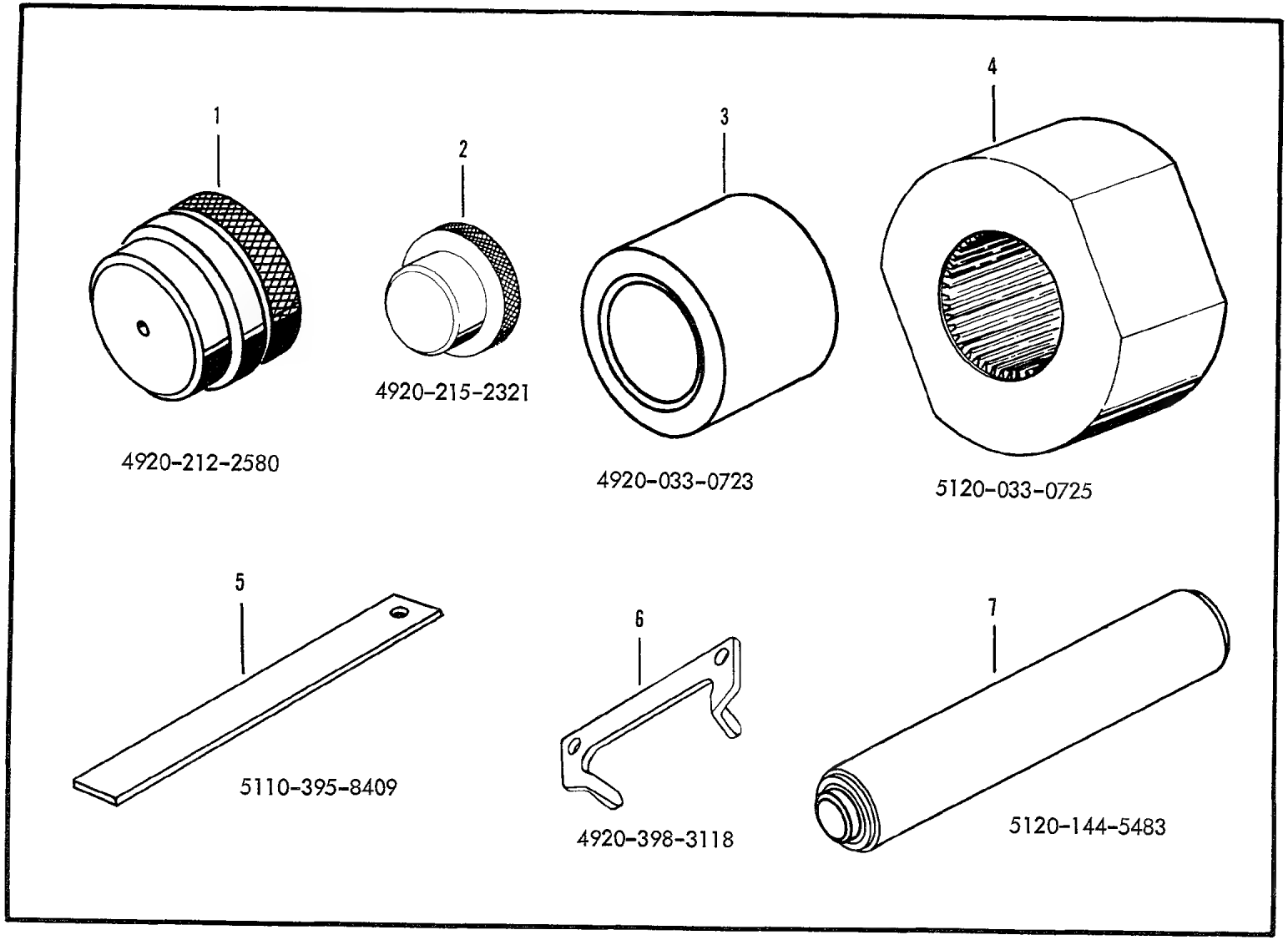

Figure E13. Engine Tools

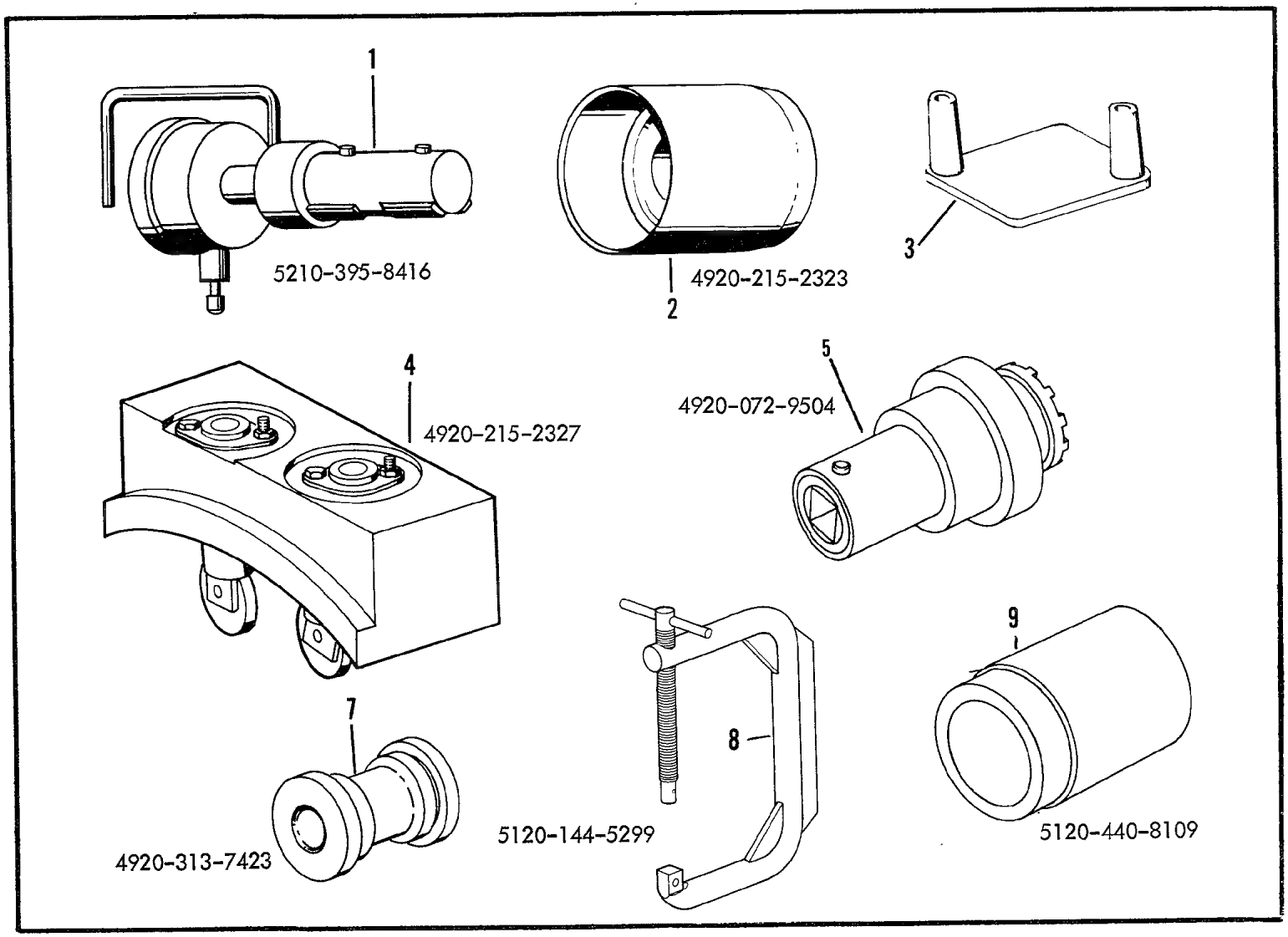

Figure E14. Engine Tools

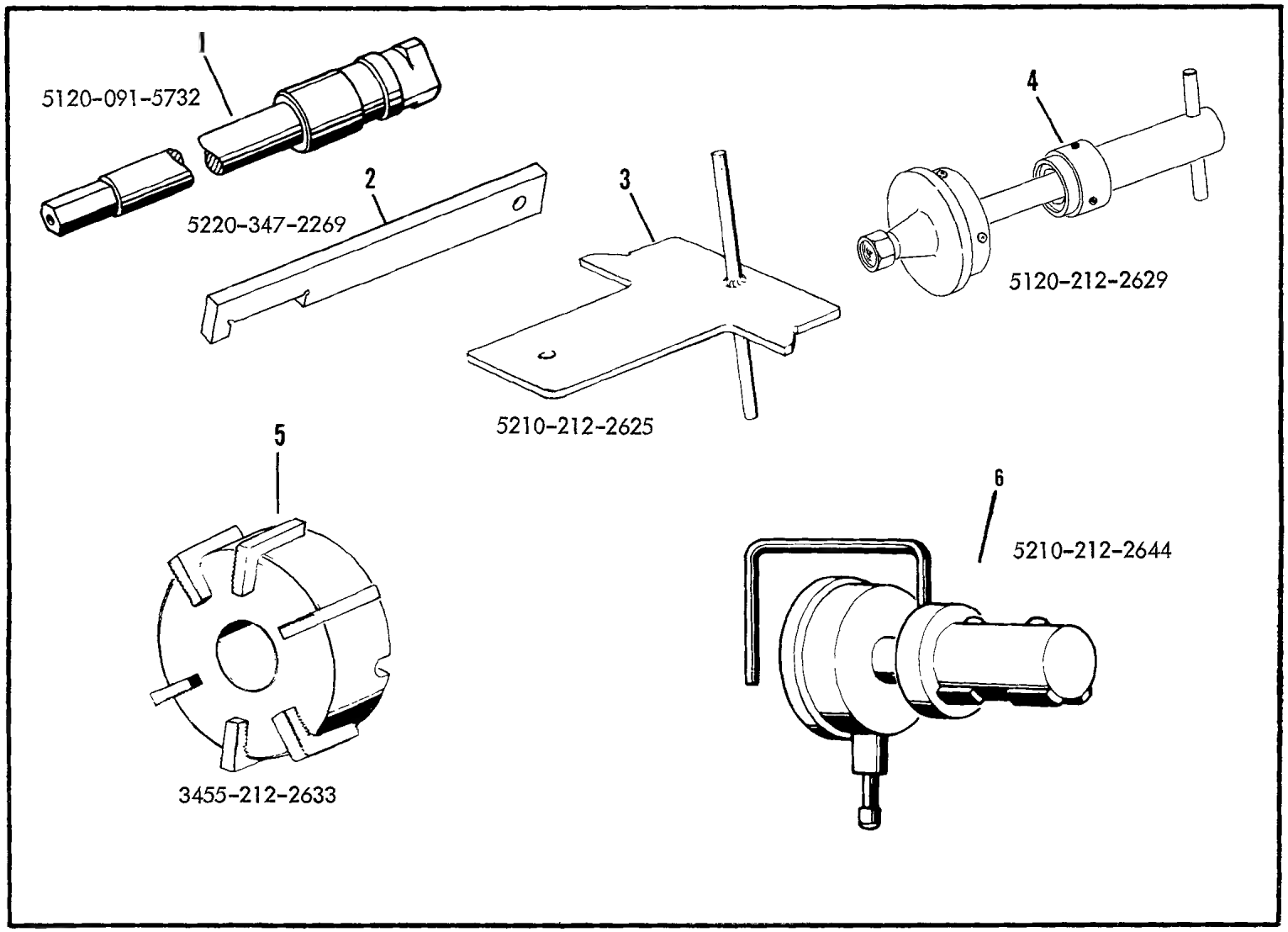

Figure E15. Engine Tools

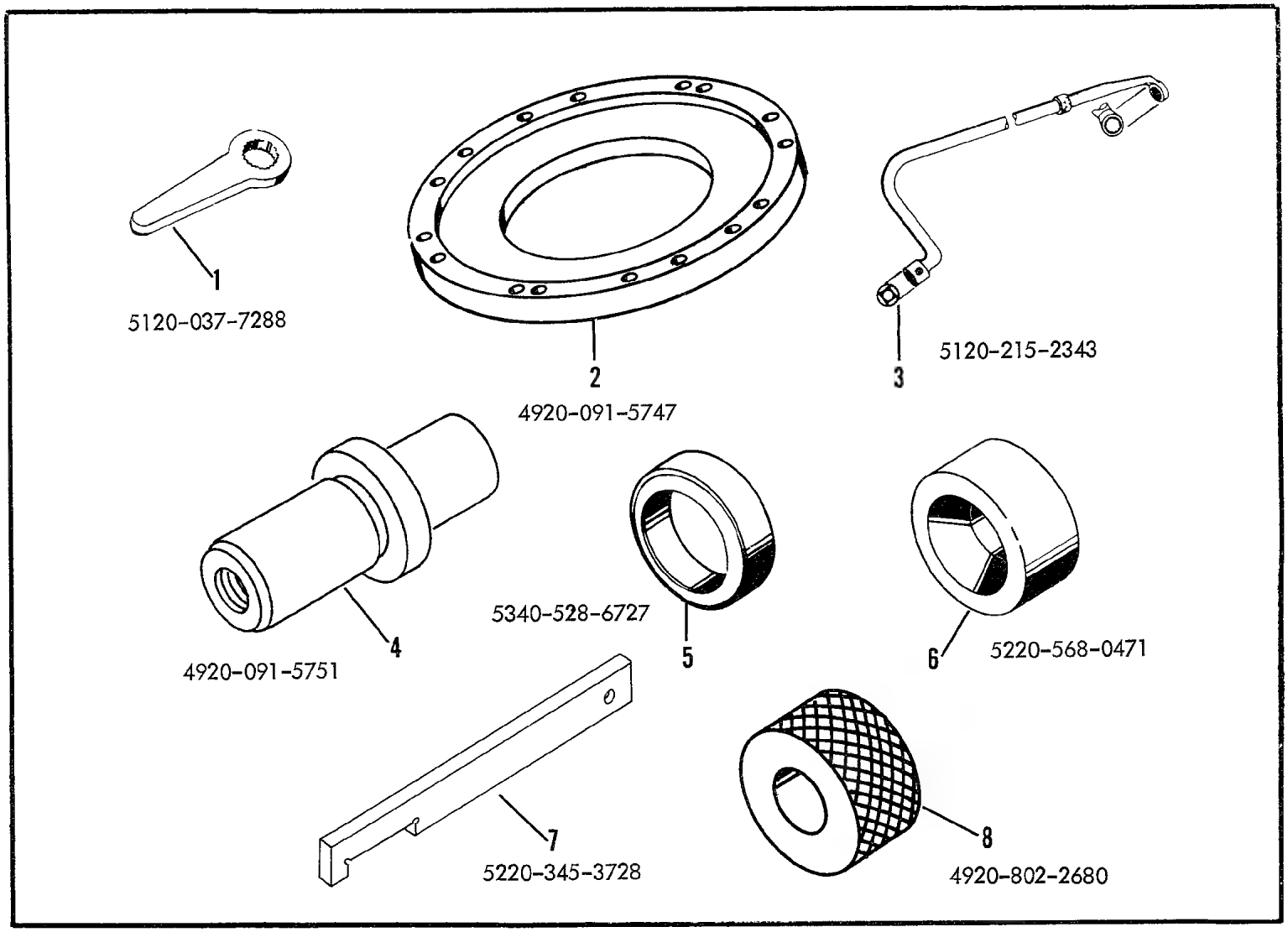

Figure E16. Engine Tools

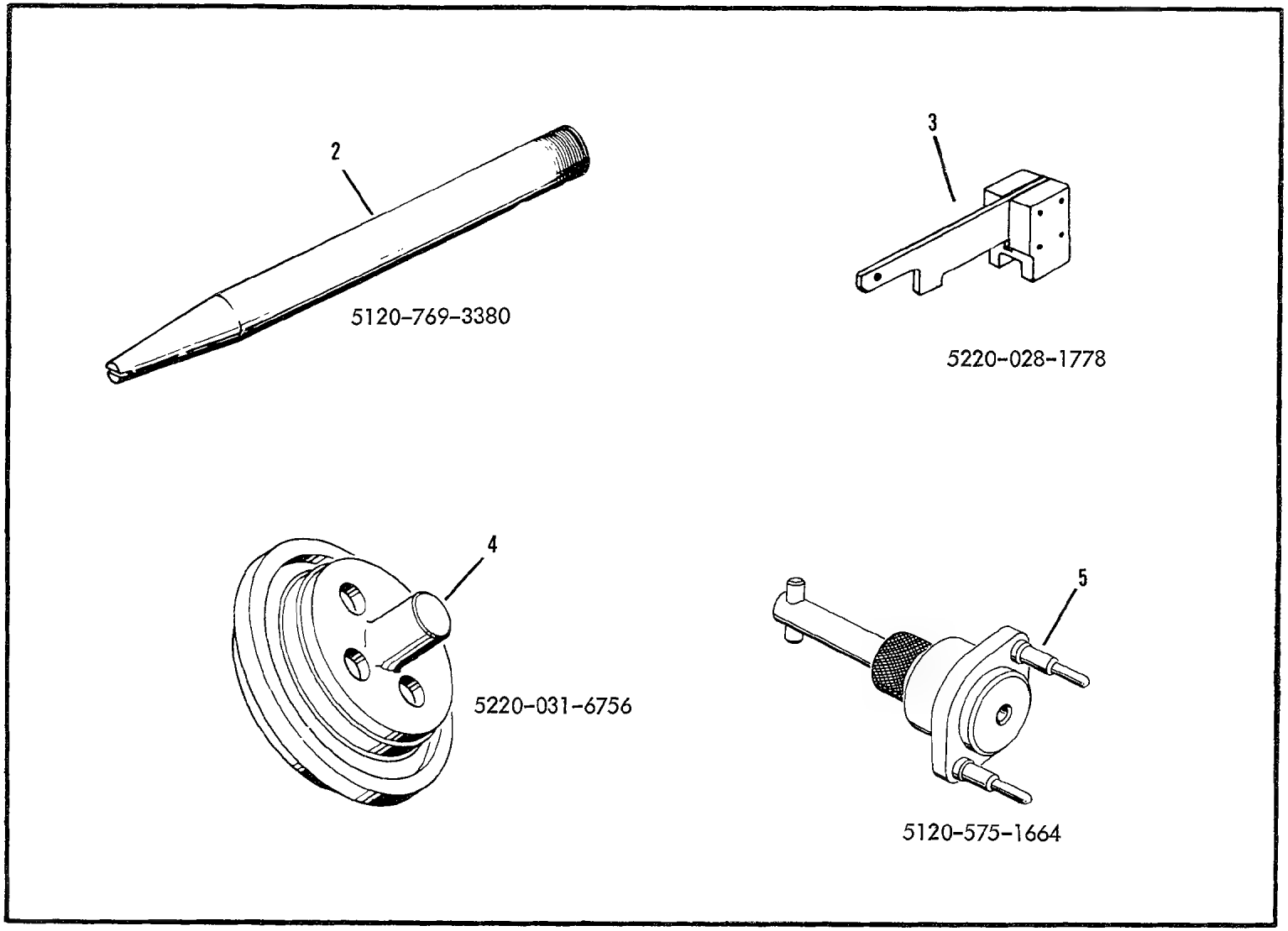

Figure E17. Engine Tools

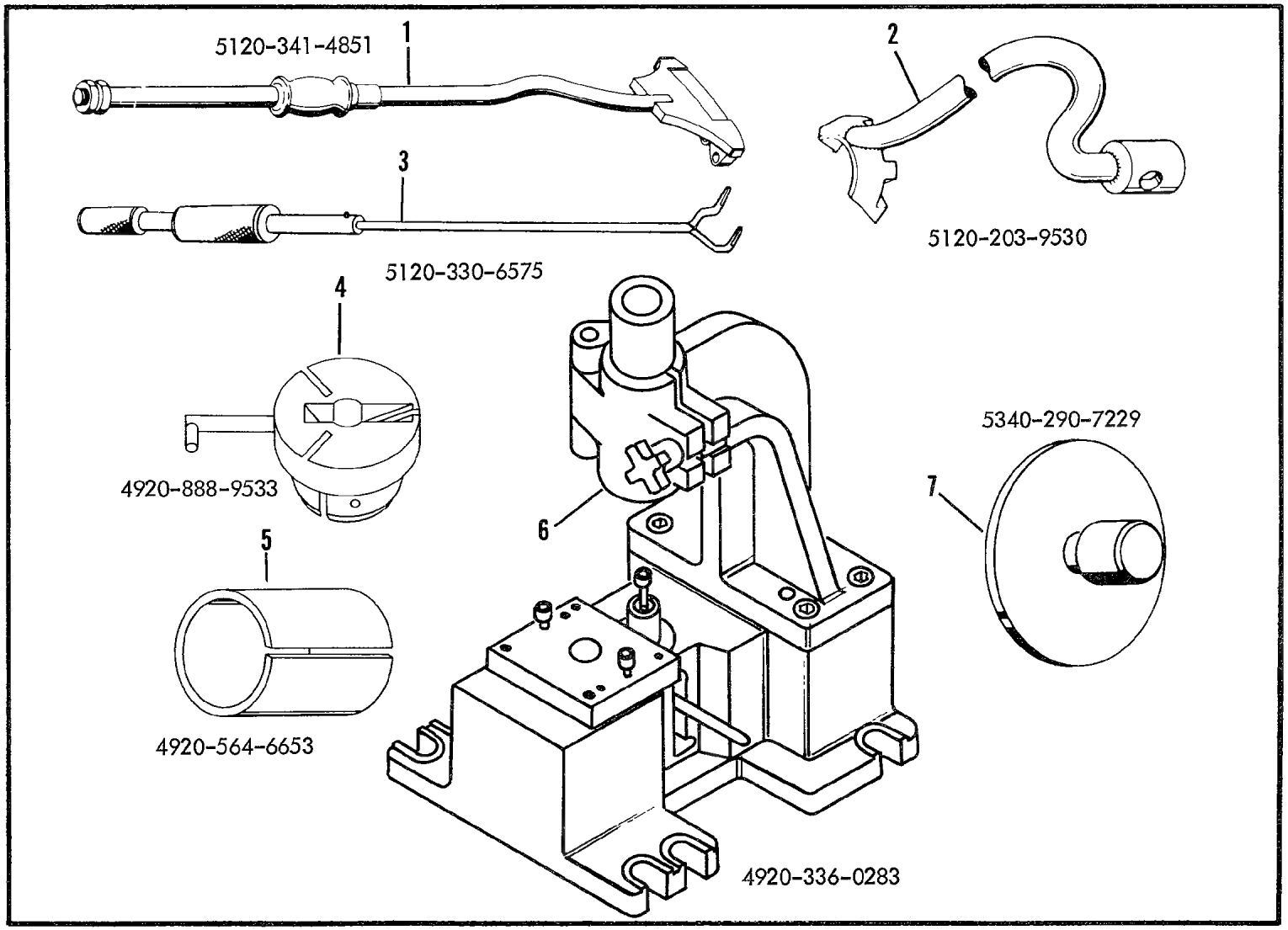

Figure E18. Engine Tools

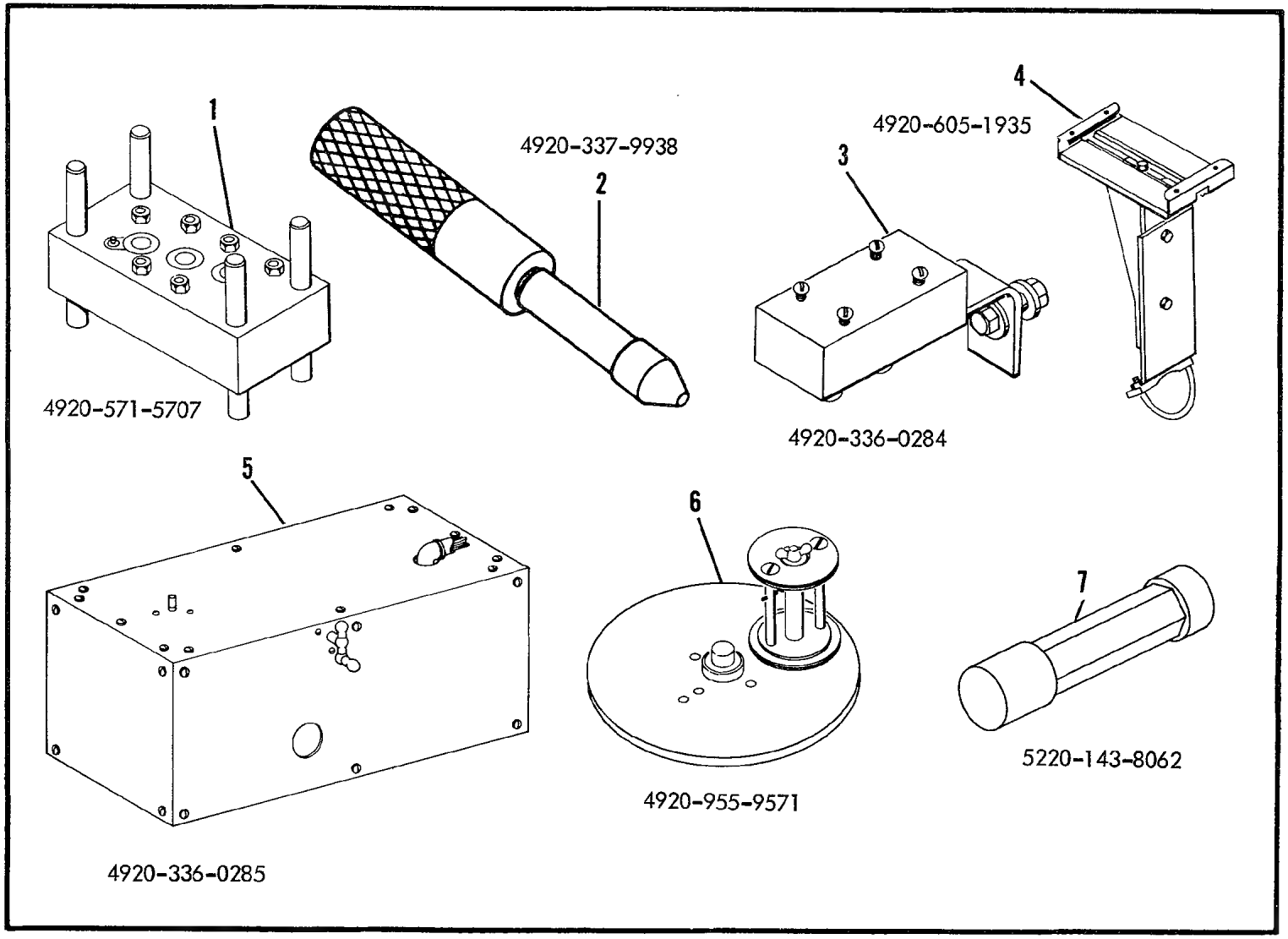

Figure E19. Engine Tools

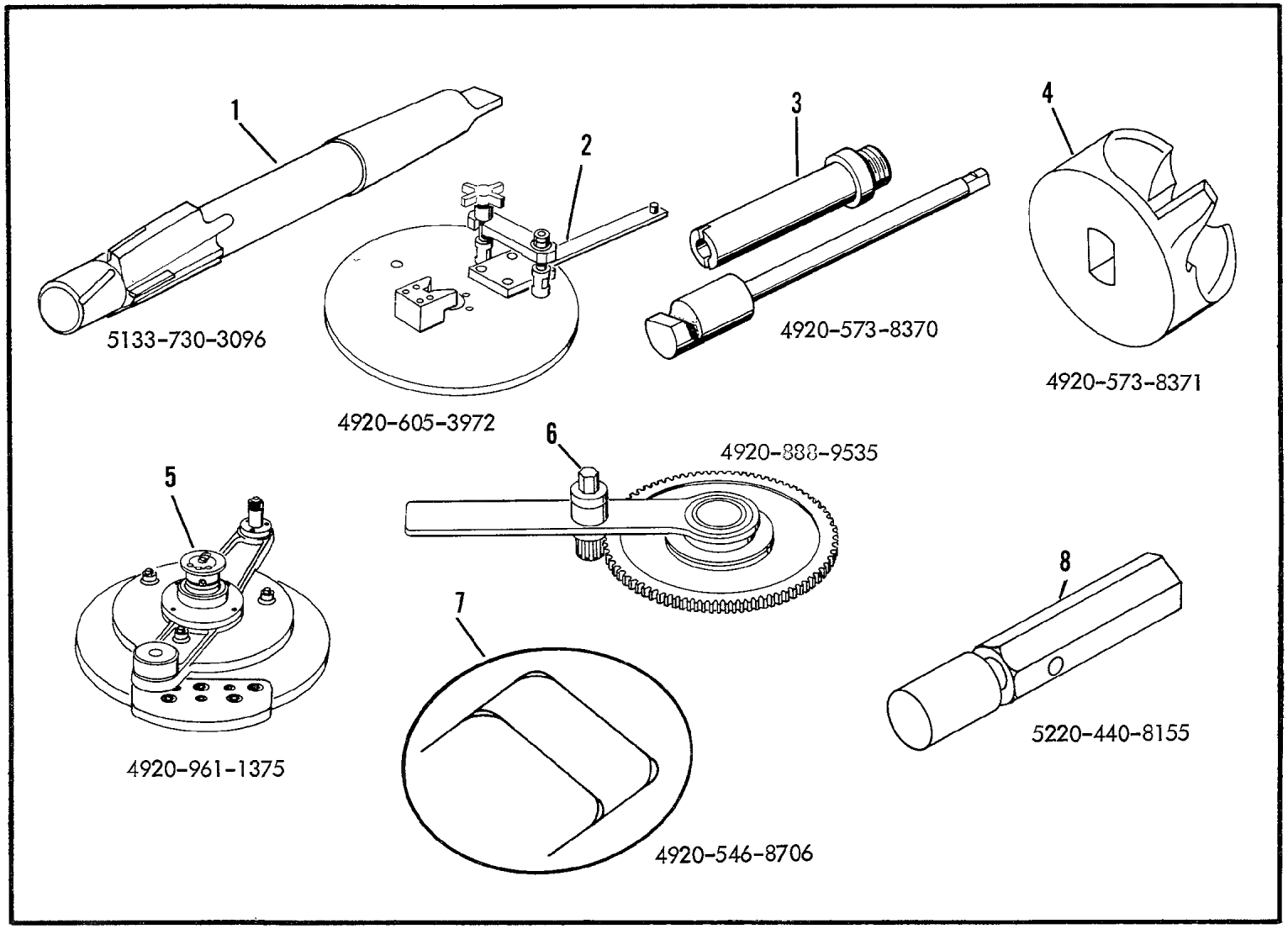

Figure E20. Engine Items

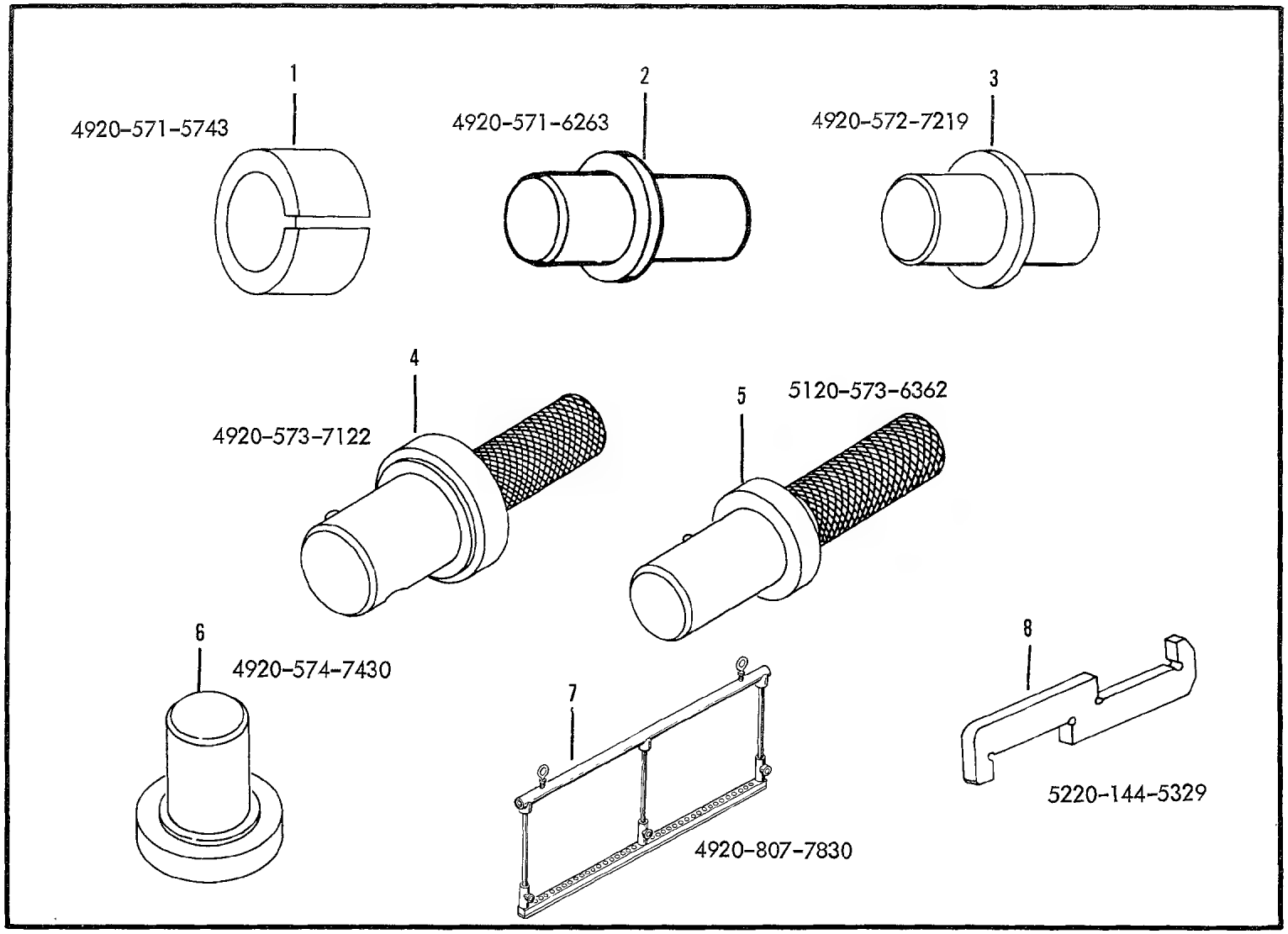

Figure E21. Engine Tools

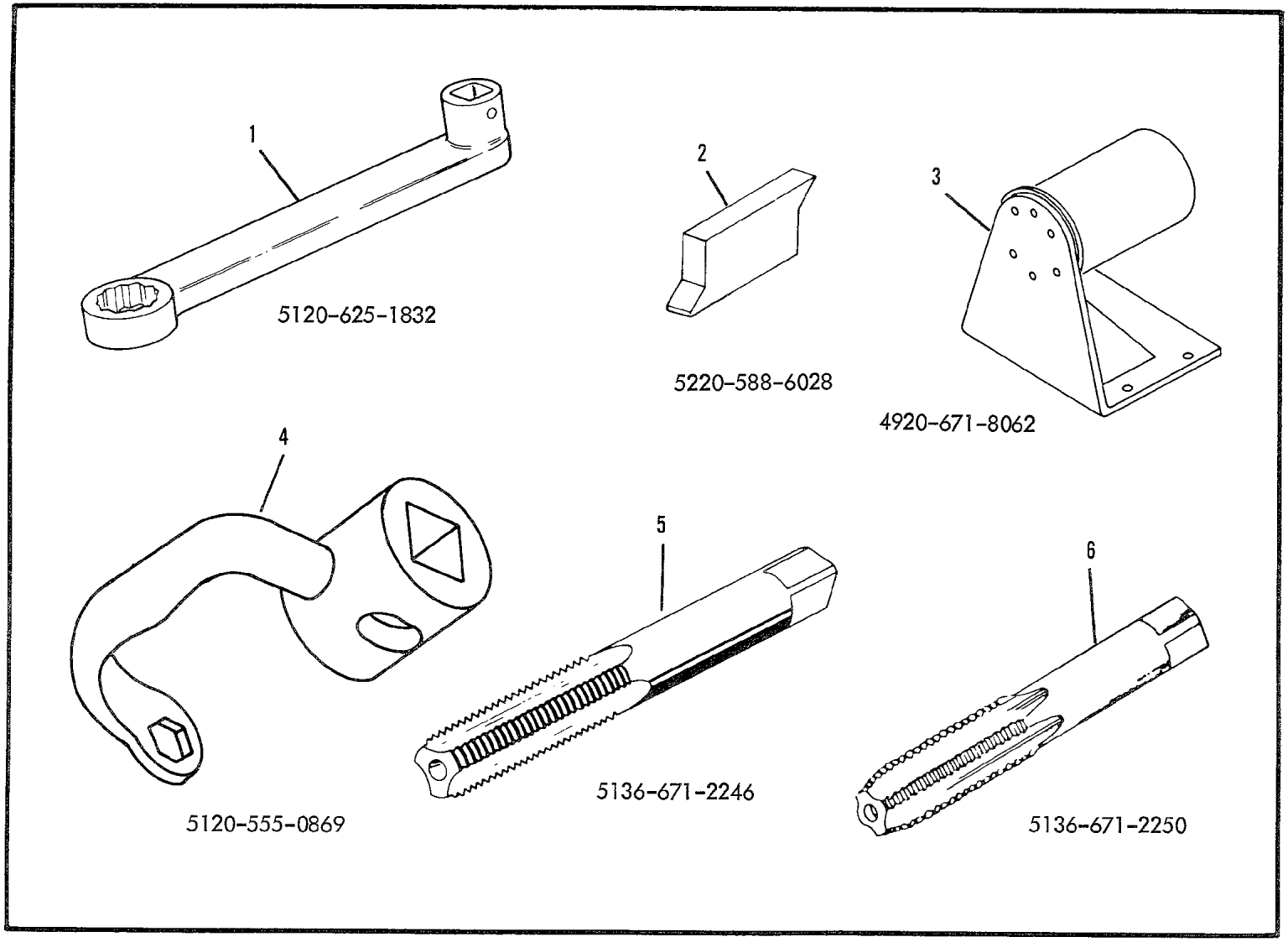

Figure E22. Engine Tools

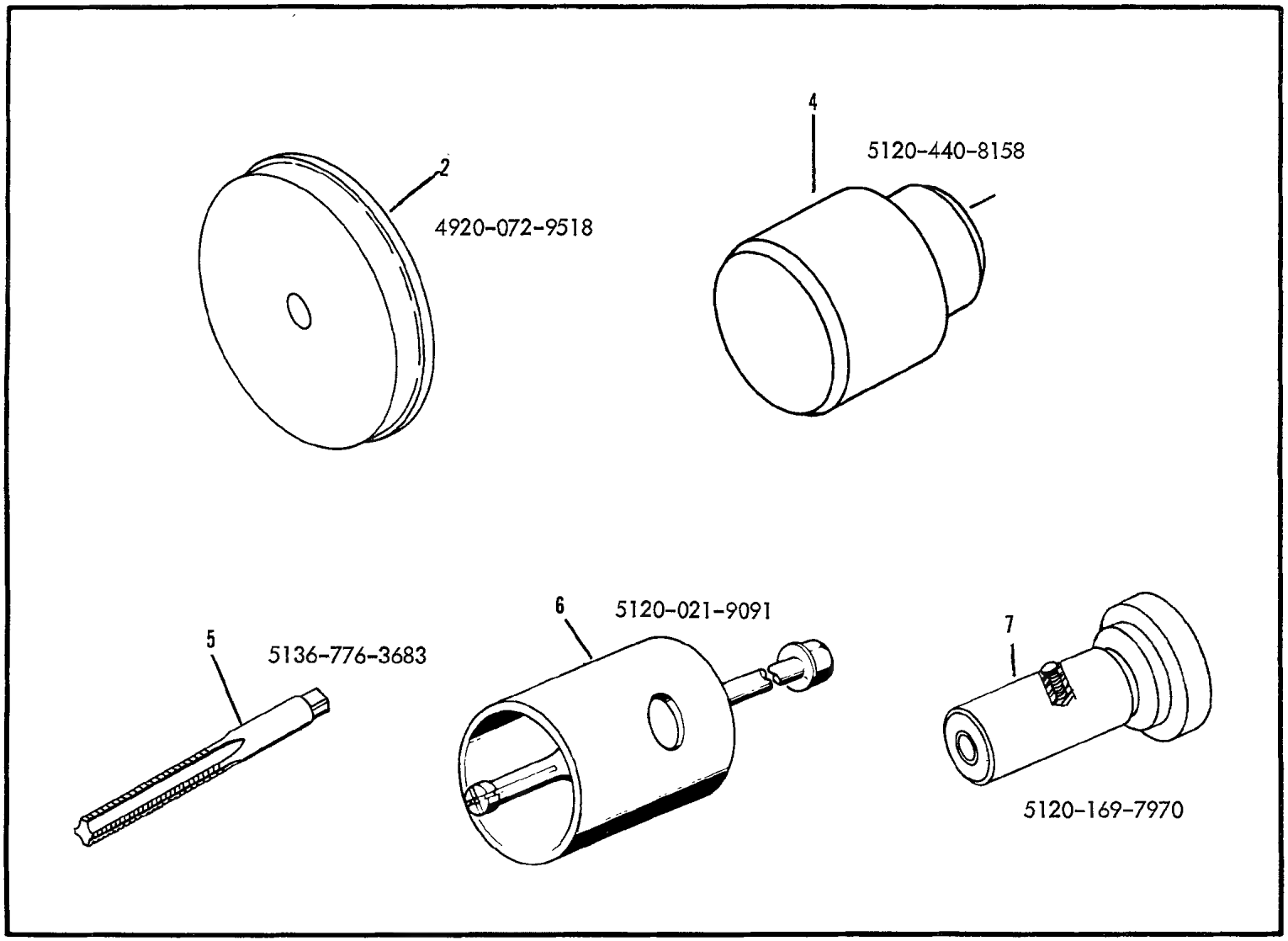

Figure E23. Engine Tools

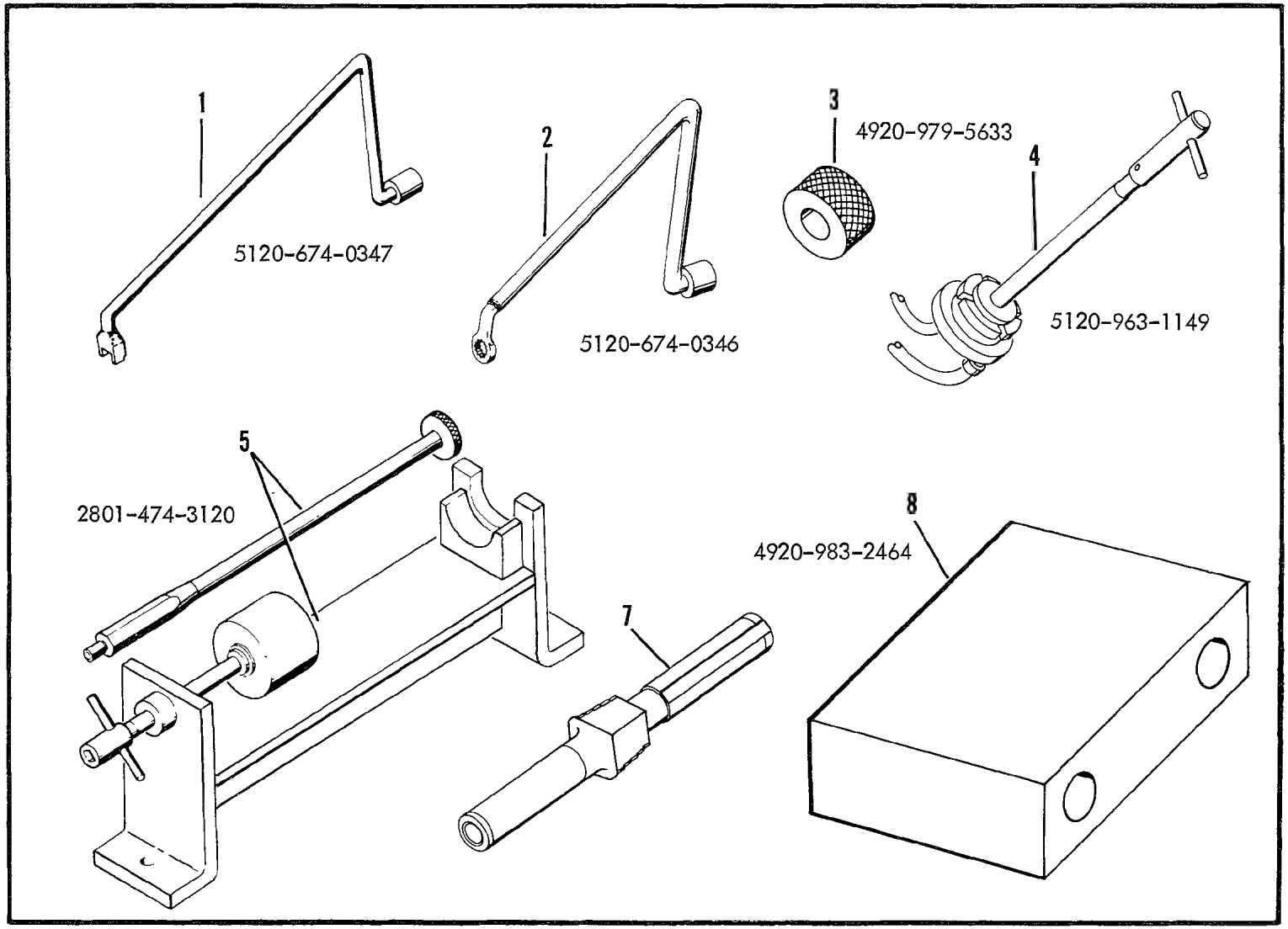

Figure E24. Engine Tools

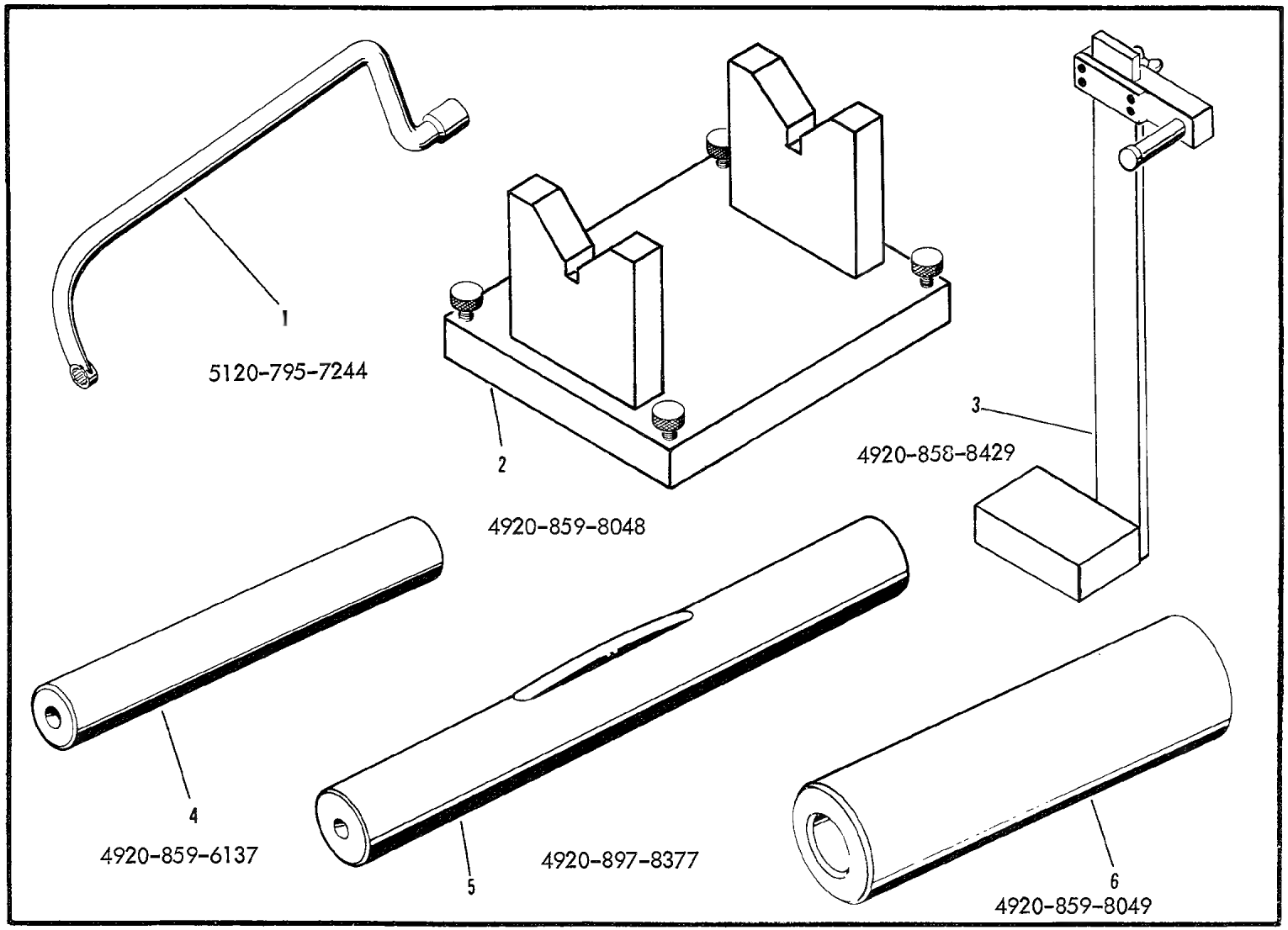

Figure E25. Engine Tools

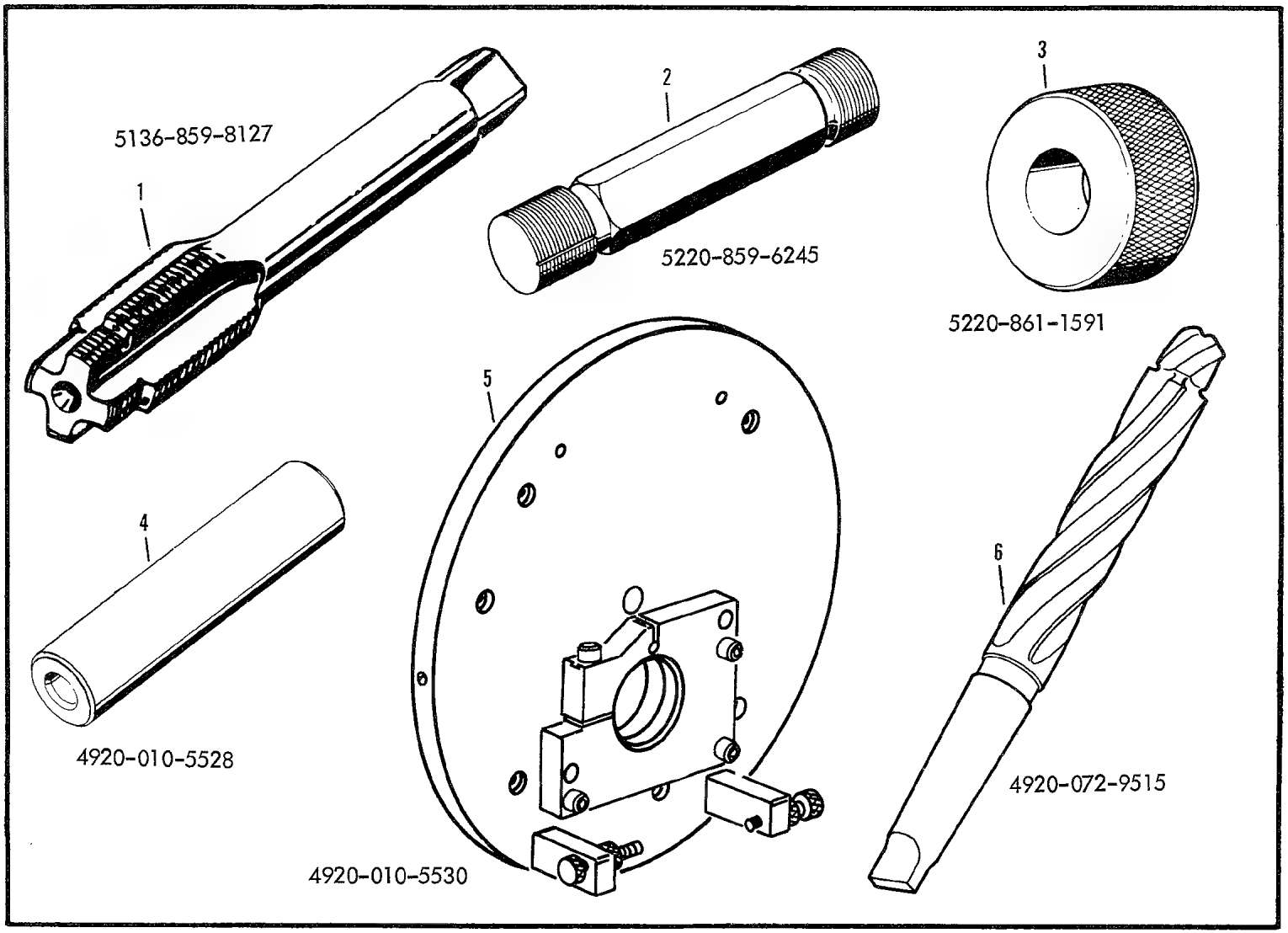

Figure E26. Engine Tools

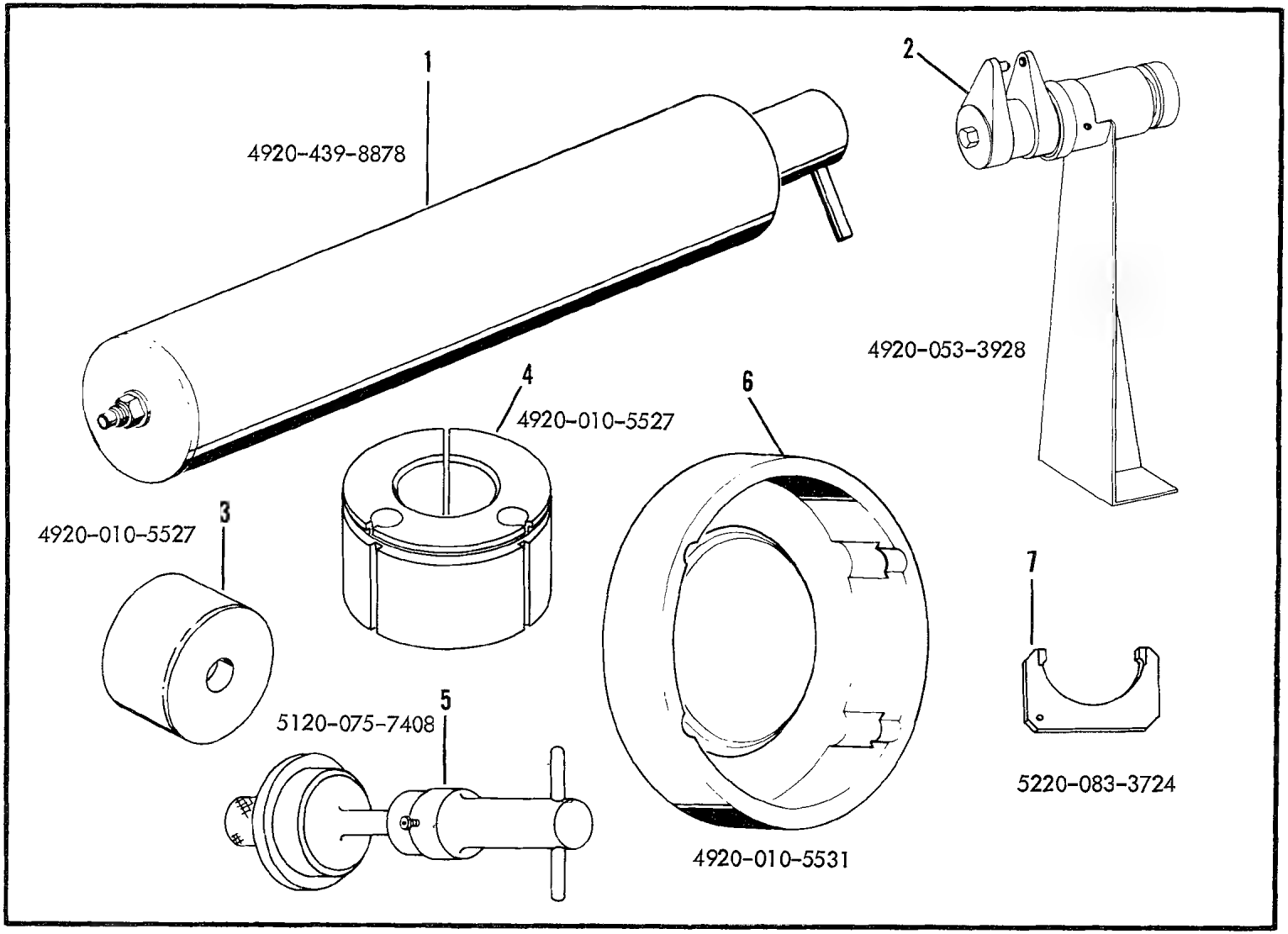

Figure E27. Engine Tools

1385

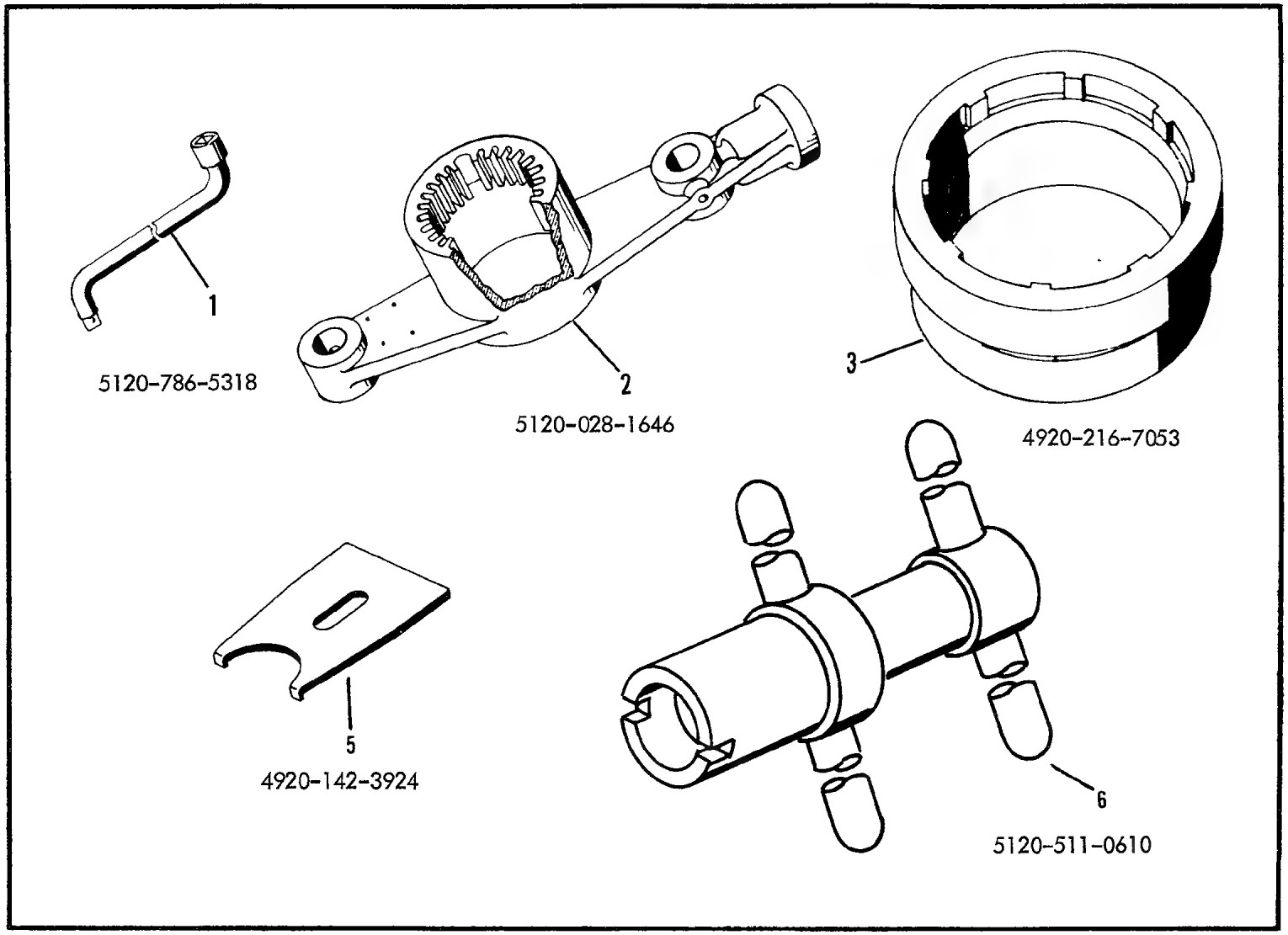

1385

Figure E28. Engine Tools

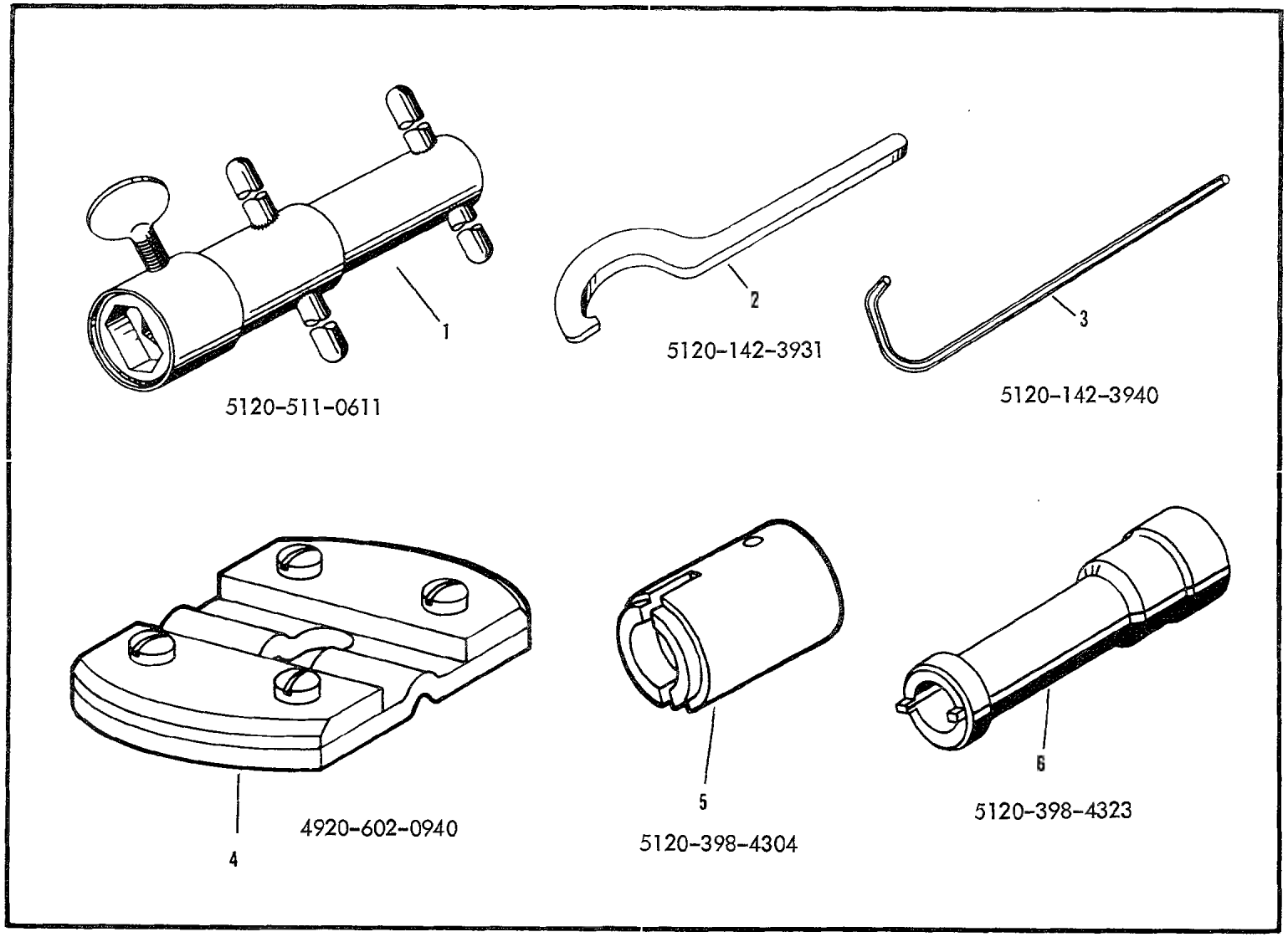

Figure E29. Engine Tools

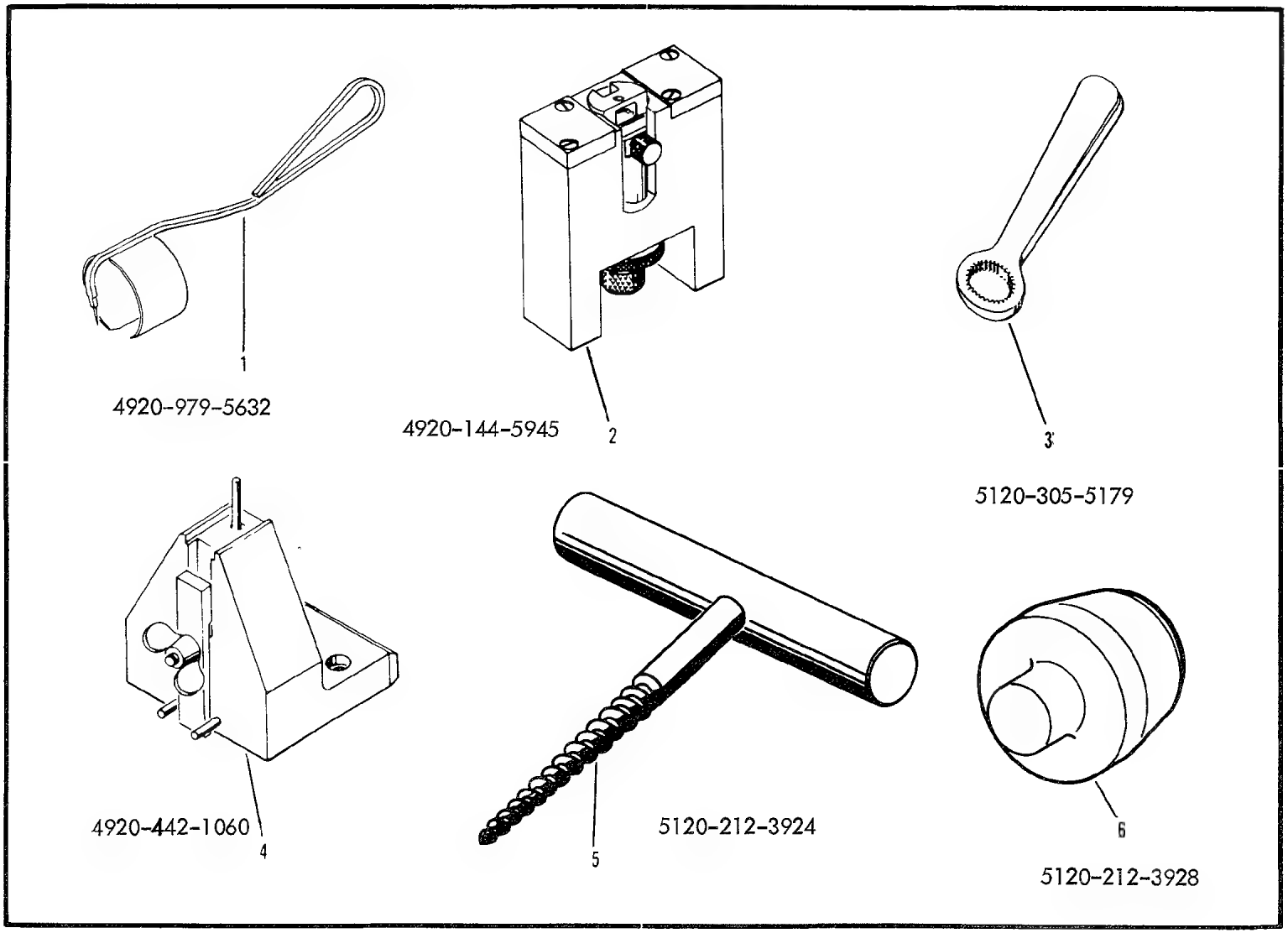

Figure E30. Engine Tools

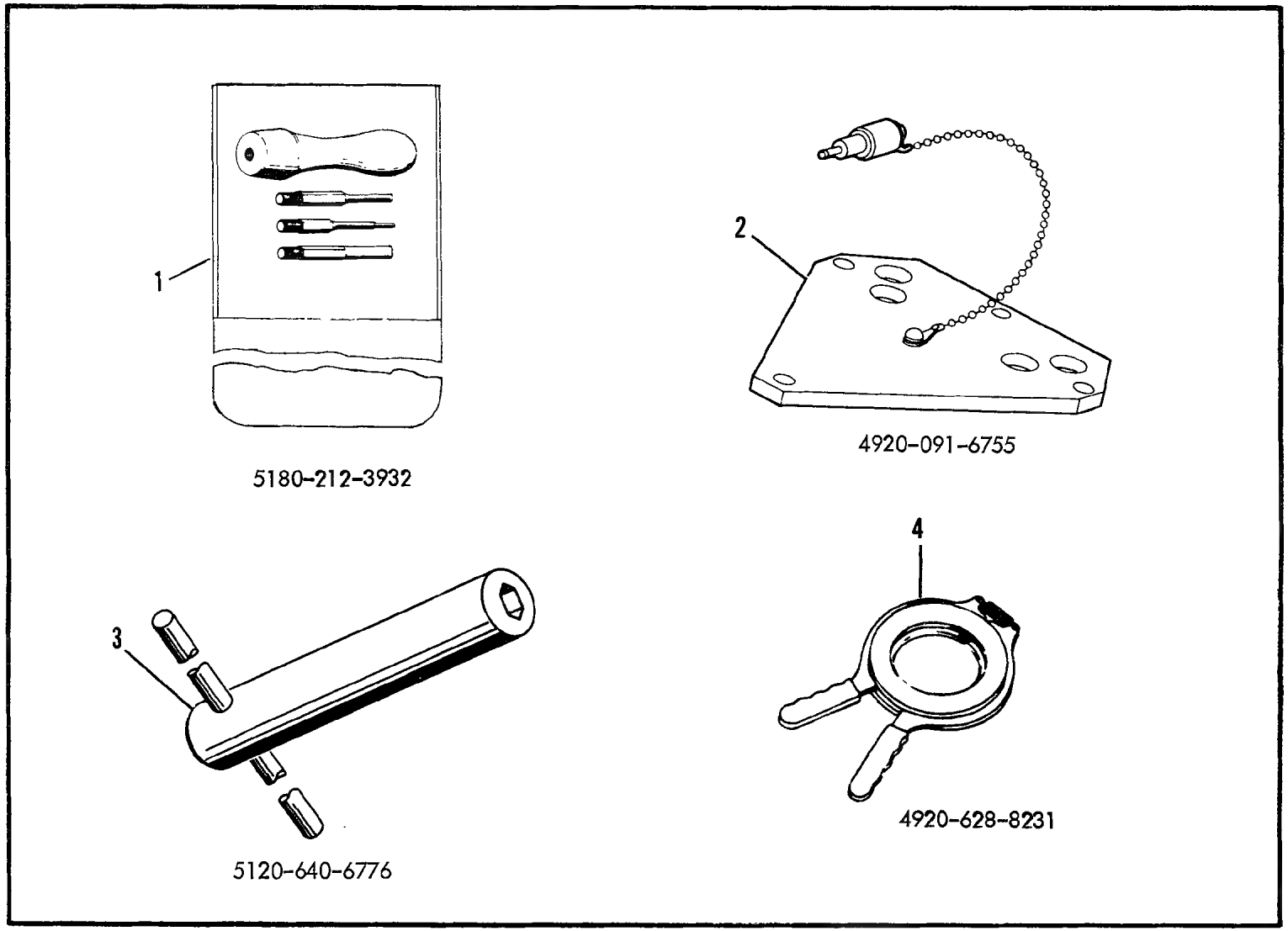

Figure E31. Engine Tools

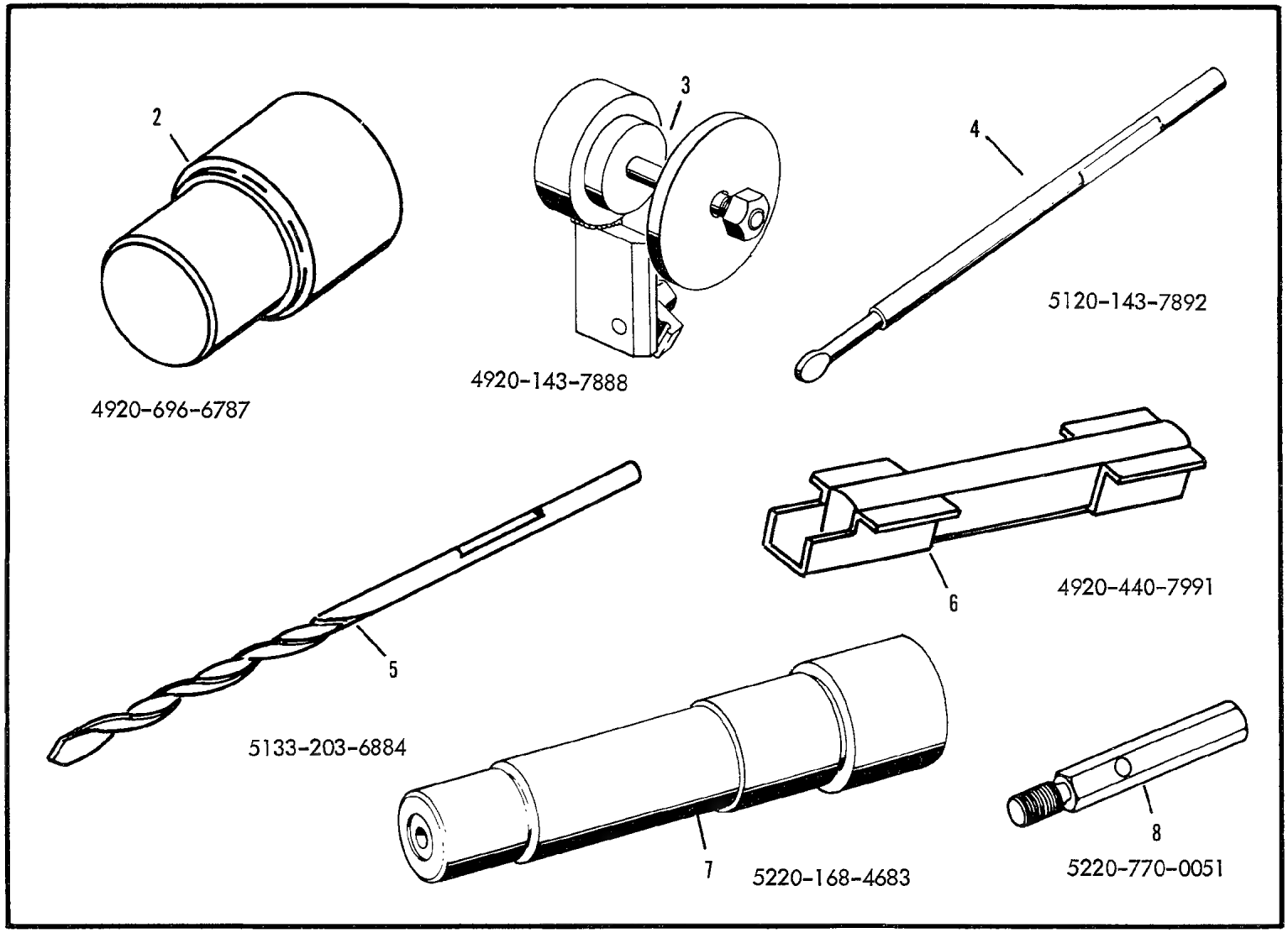

Figure E32. Engine Tools

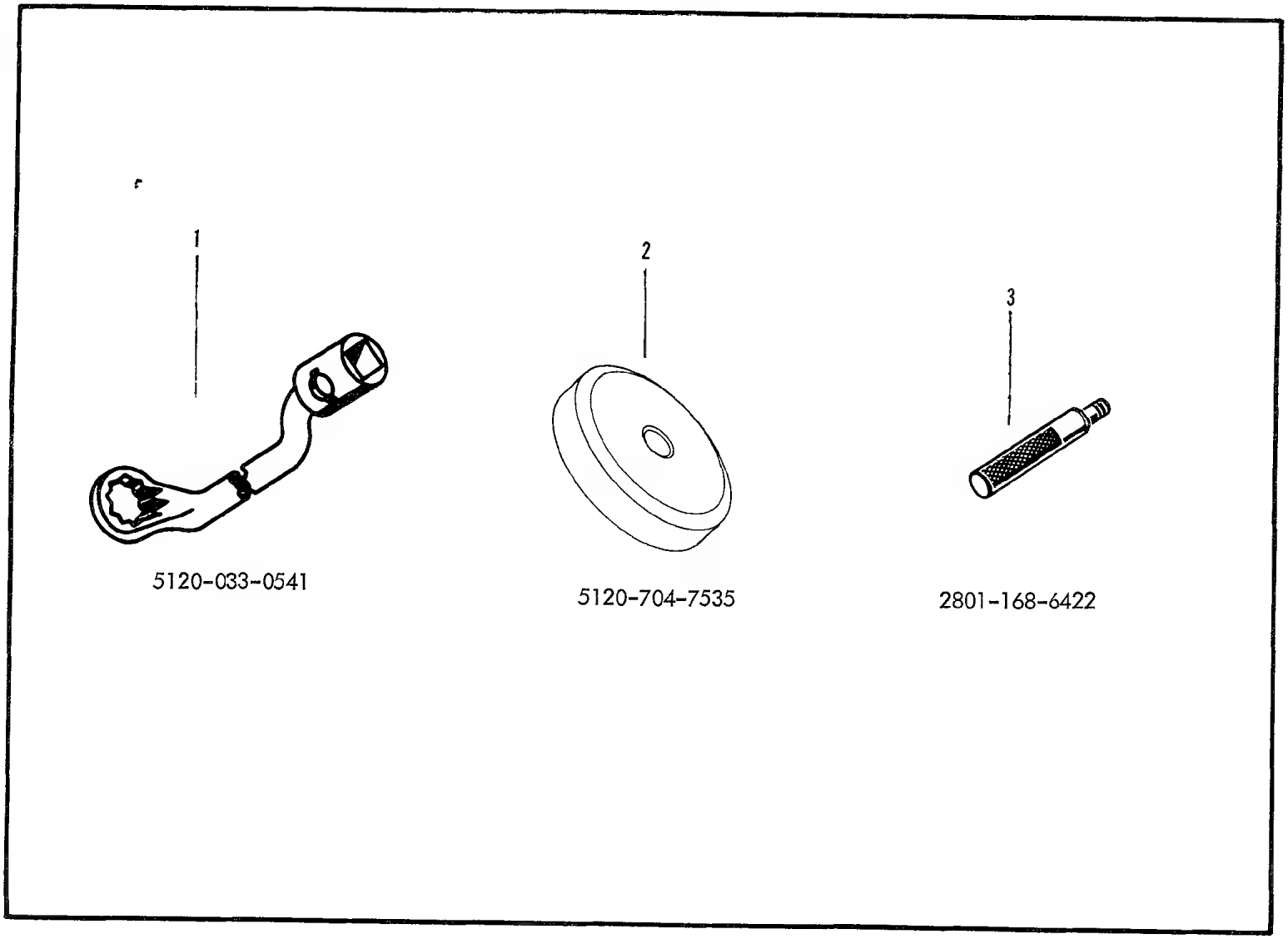

Figure E33. Engine Tools

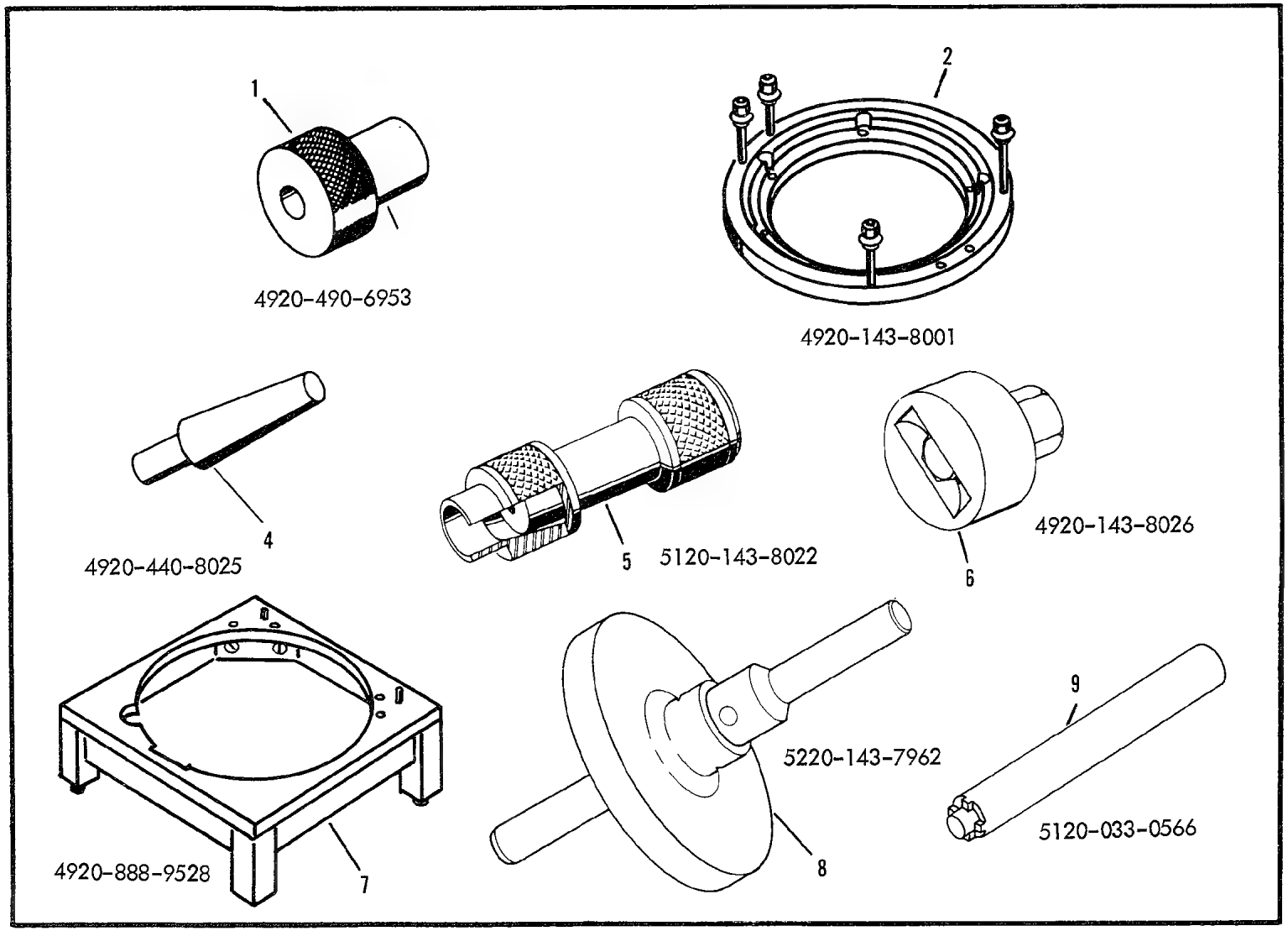

Figure E34. Engine Tools

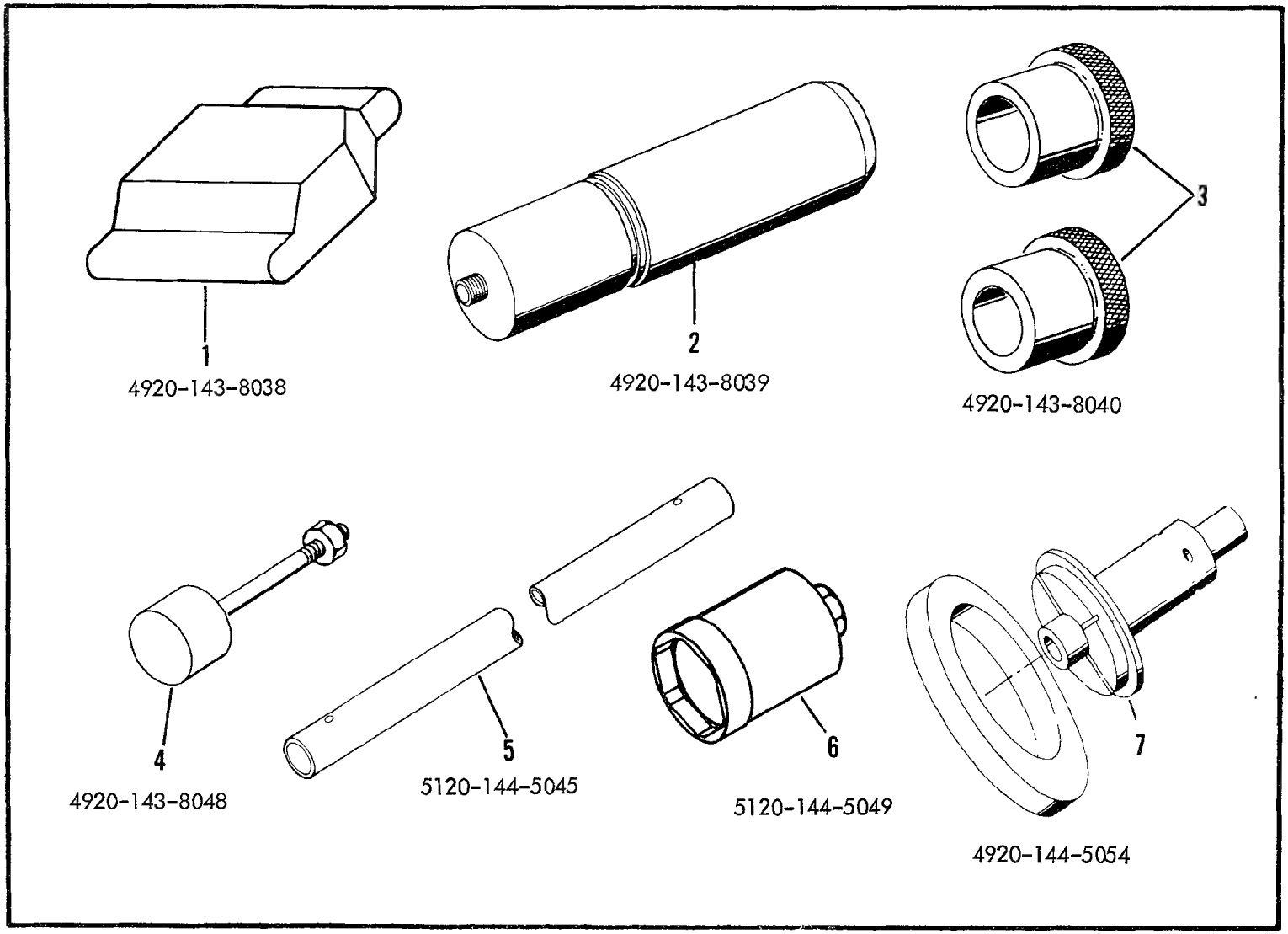

Figure E35. Engine Tools

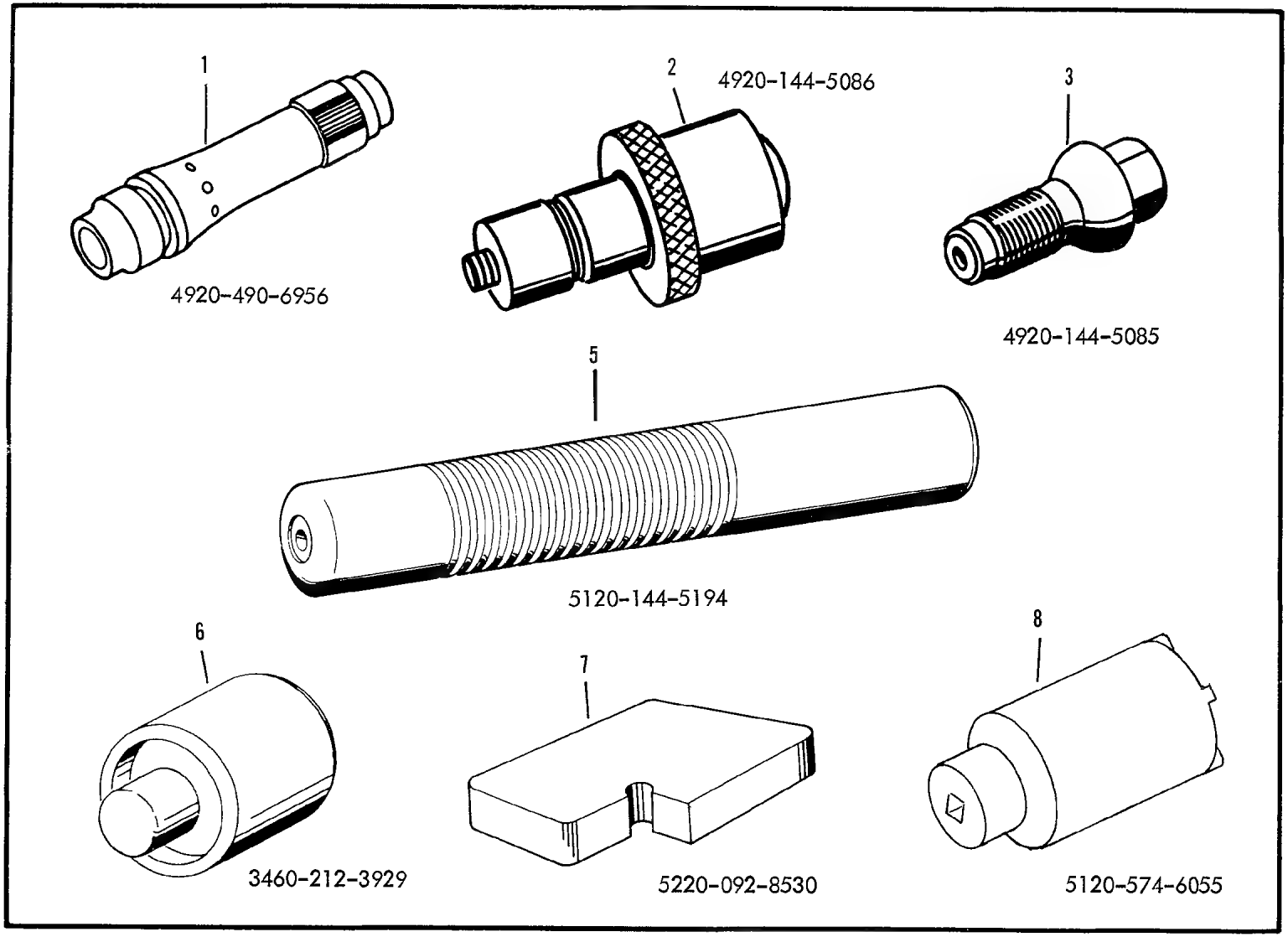

Figure E36. Engine Tools

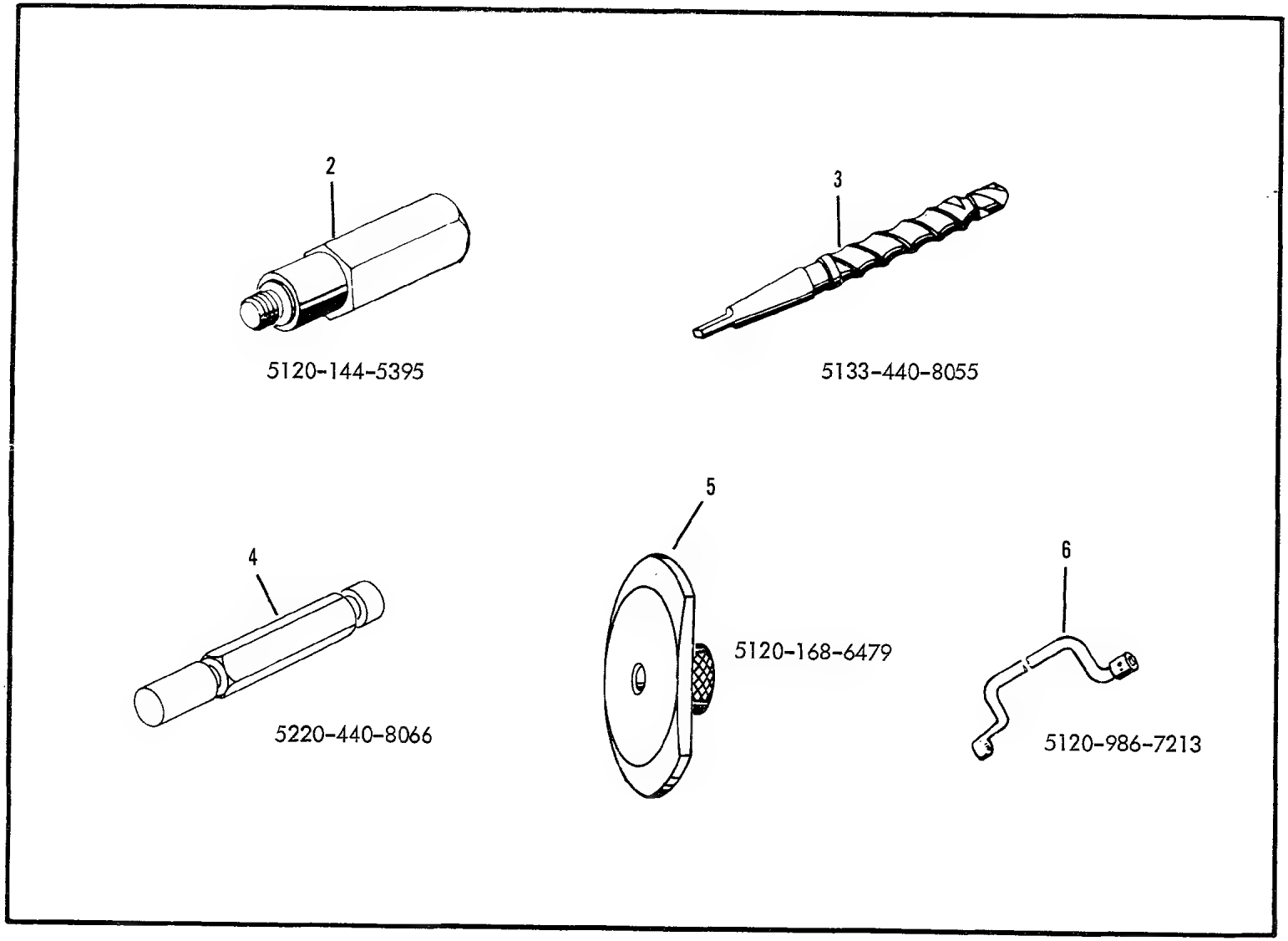

Figure E37. Engine Tools

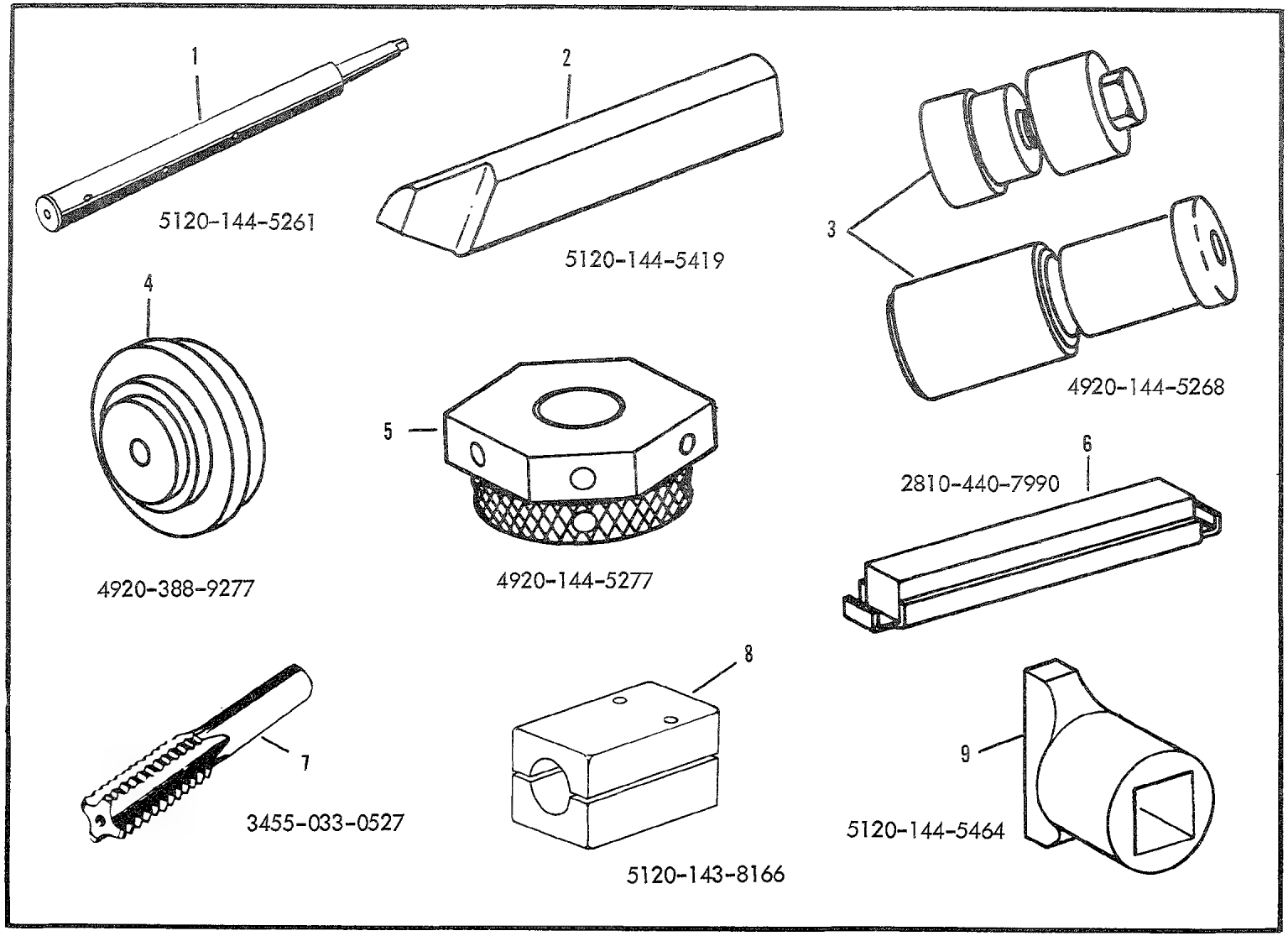

Figure E38. Engine Tools

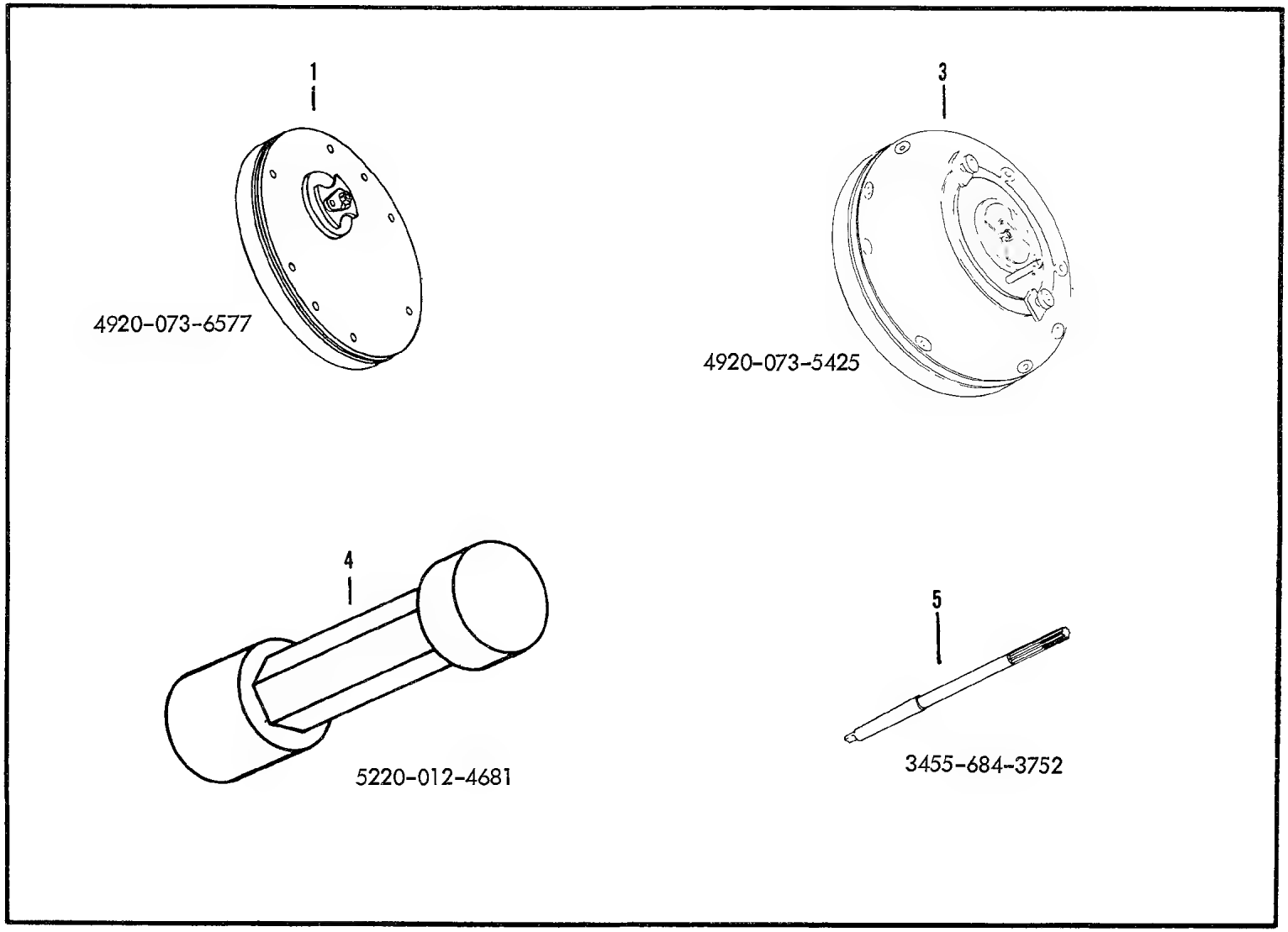

Figure E39. Engine Tools

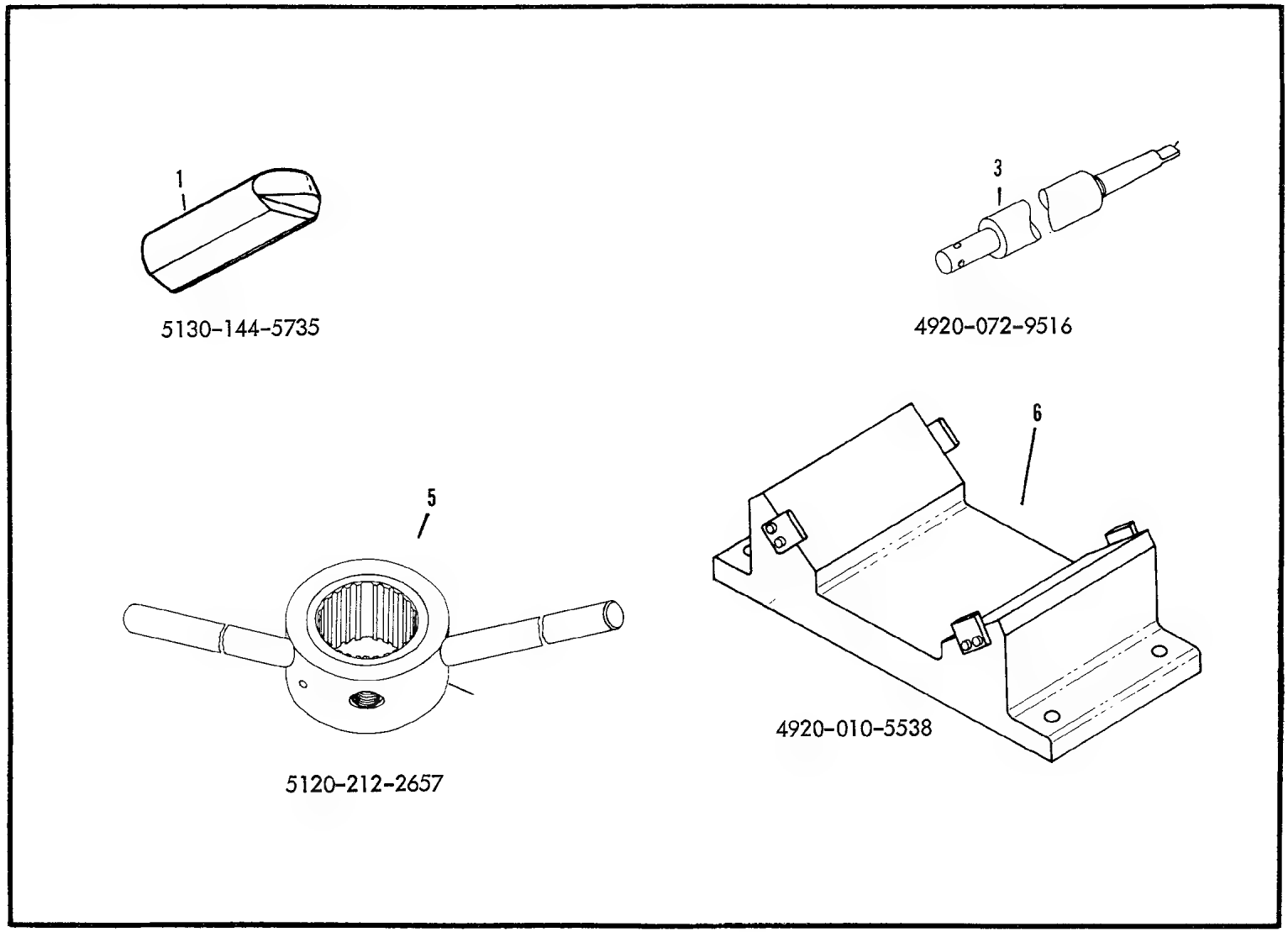

Figure E40. Engine Tools

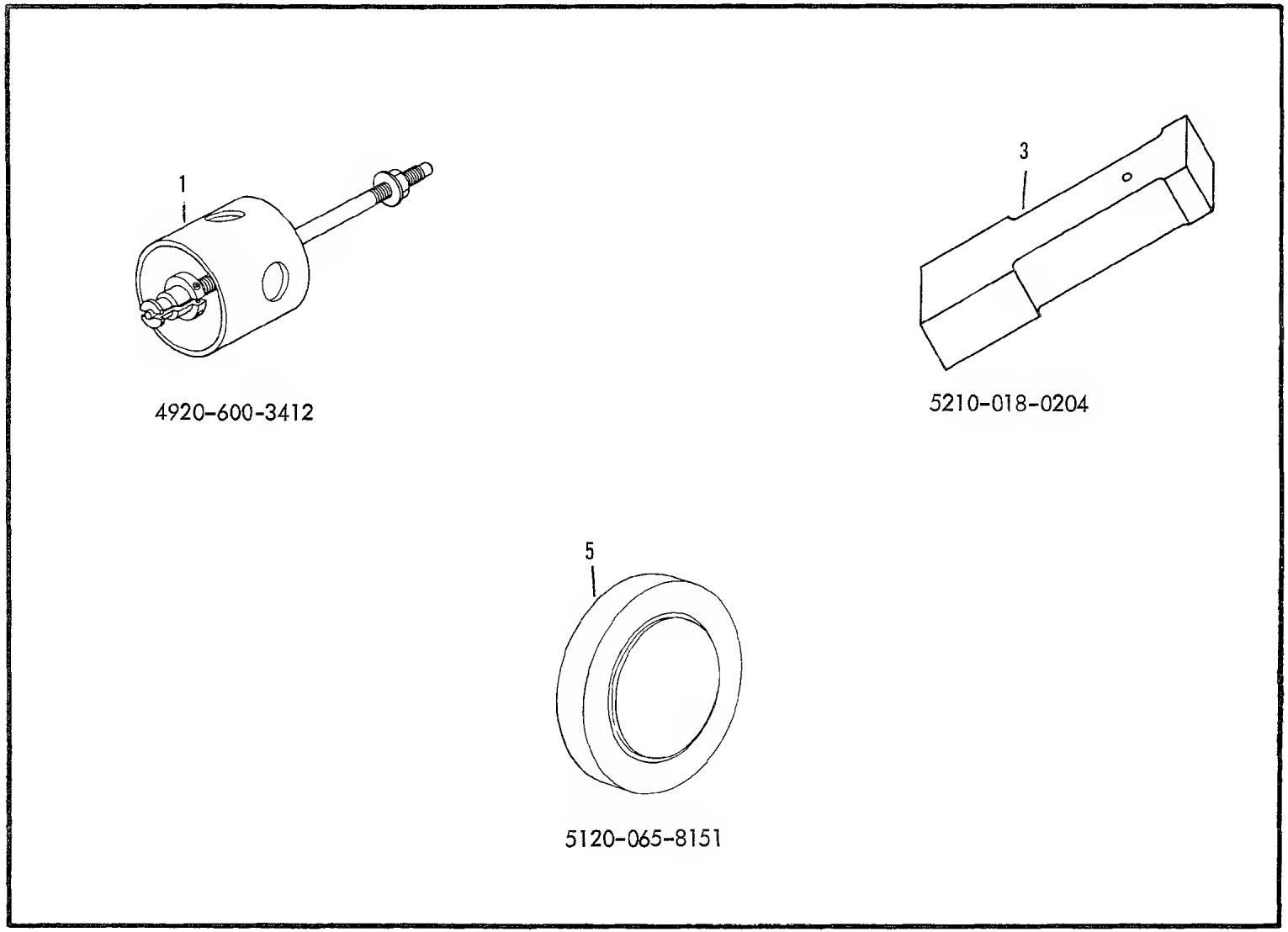

Figure E41. Engine Tools

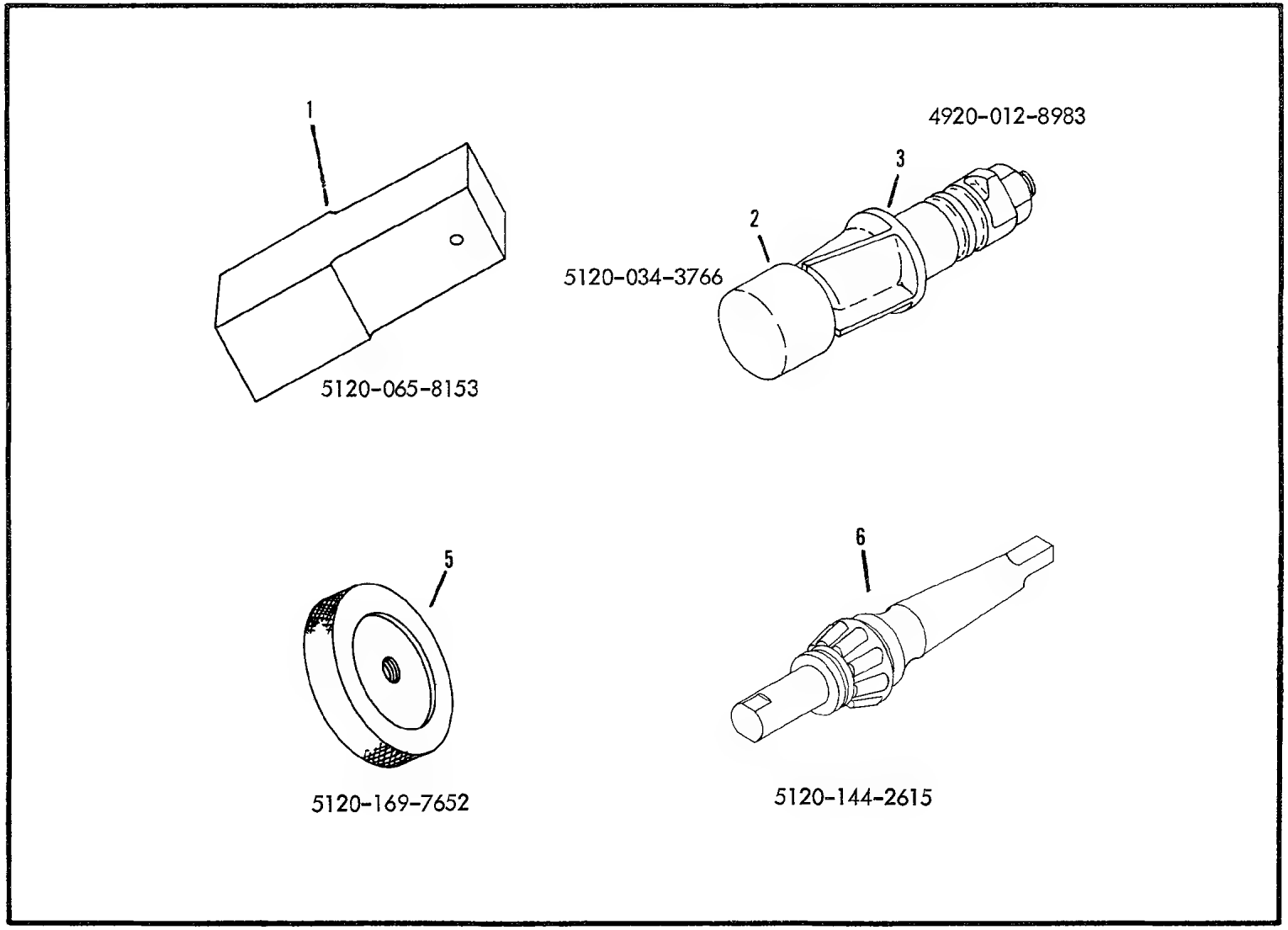

Figure E42. Engine Tools

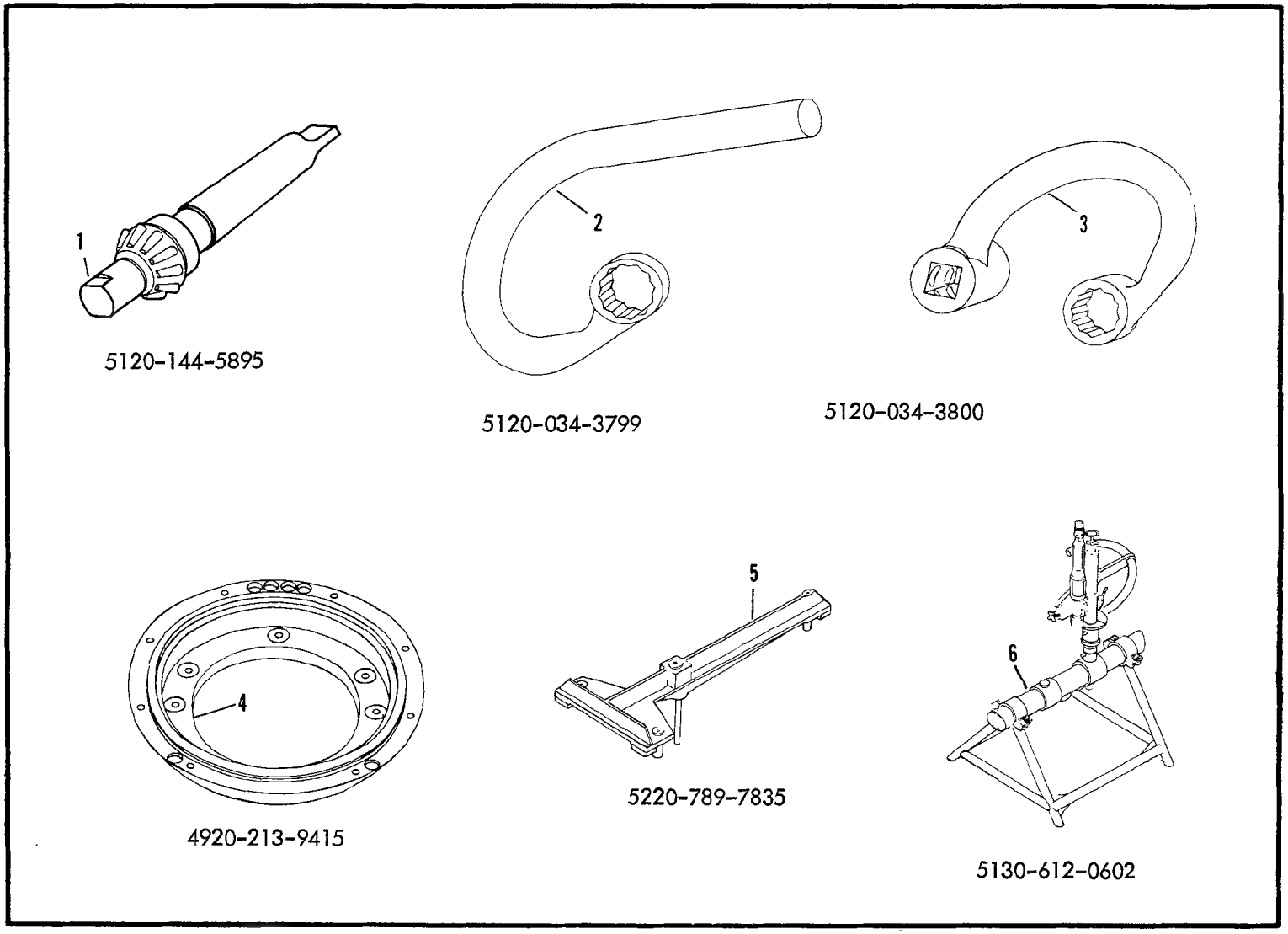

Figure E43. Engine Tools

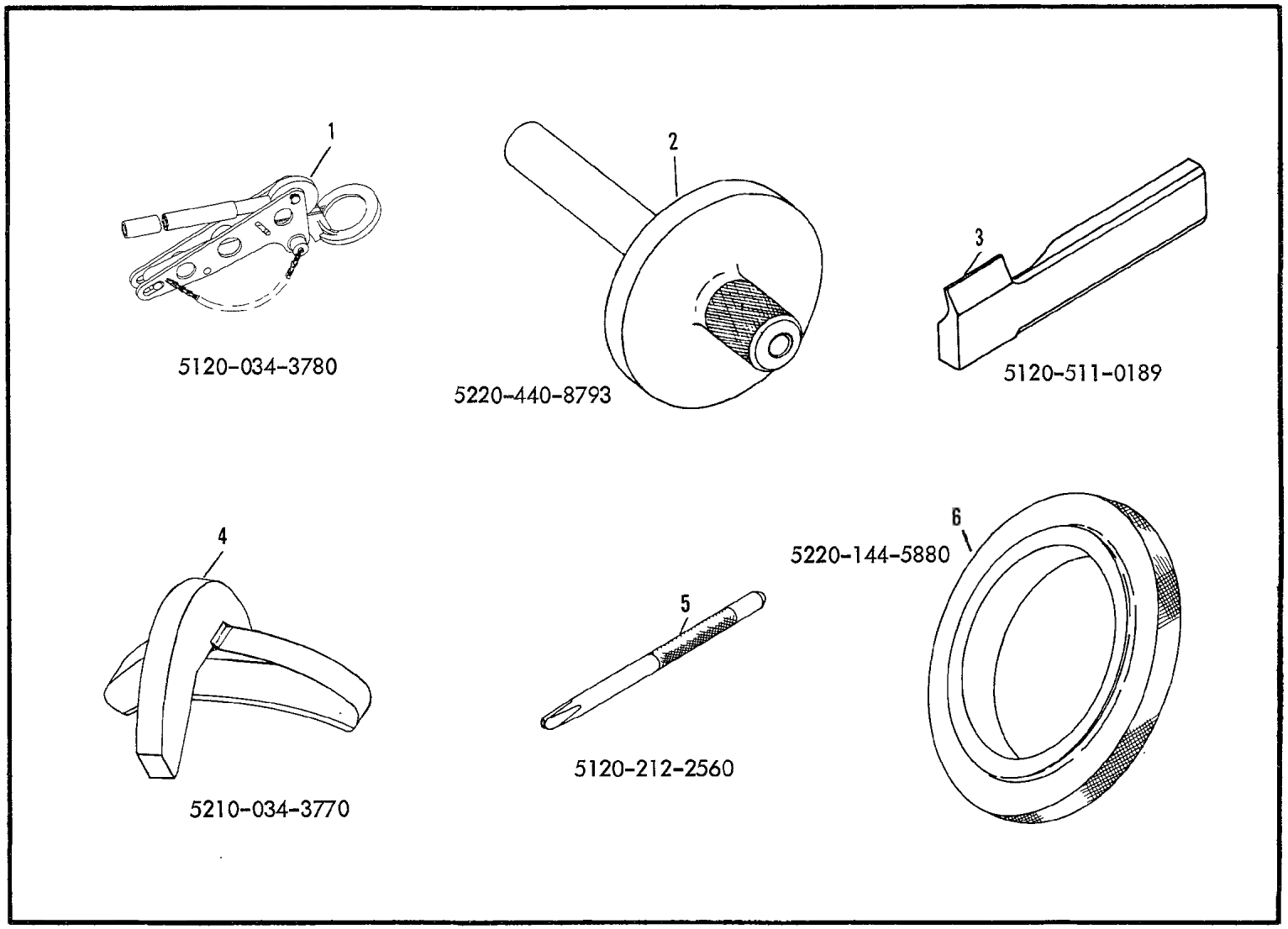

Figure E44. Engine Tools

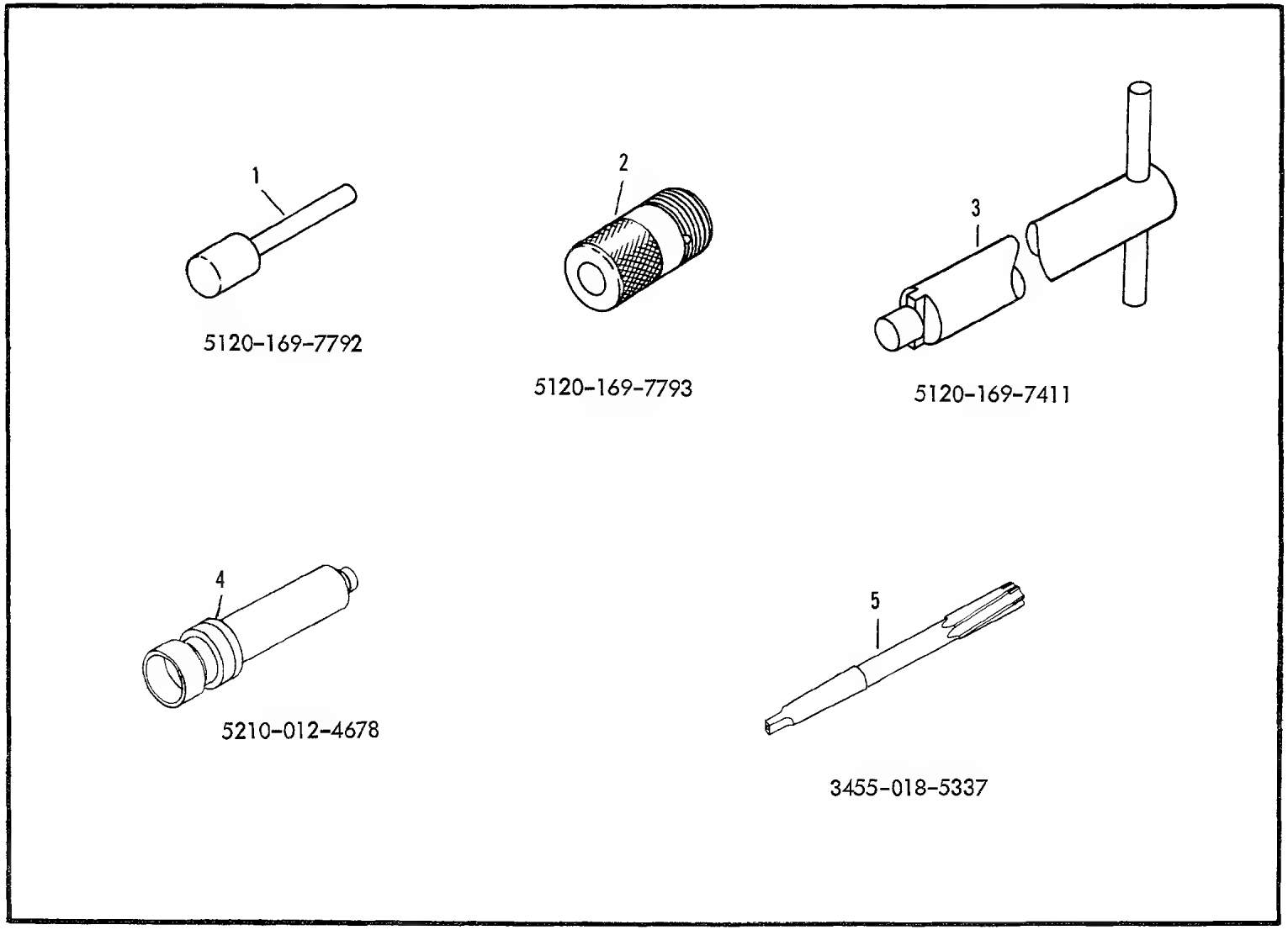

Figure E45. Engine Tools

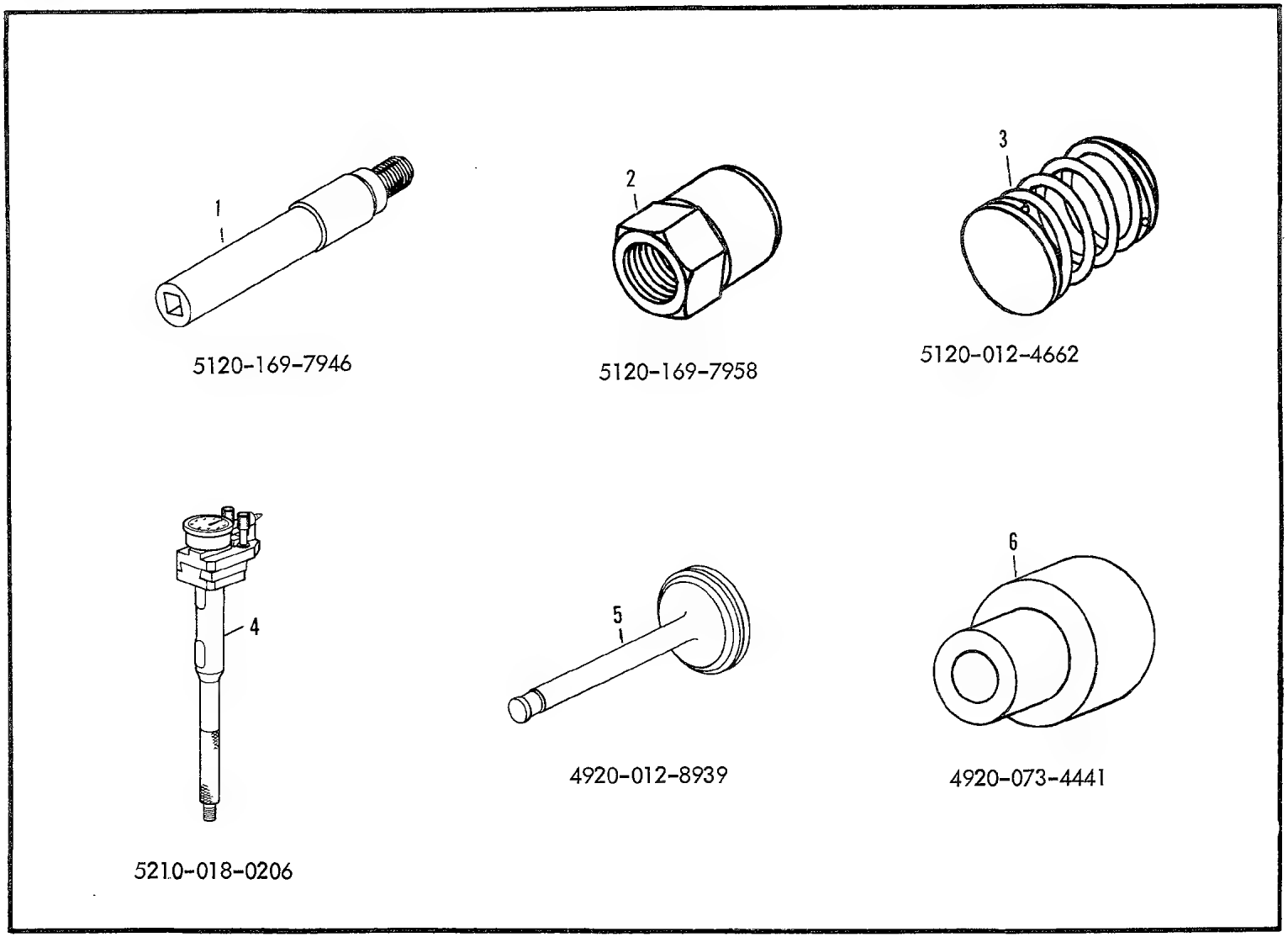

Figure E46. Engine Tools

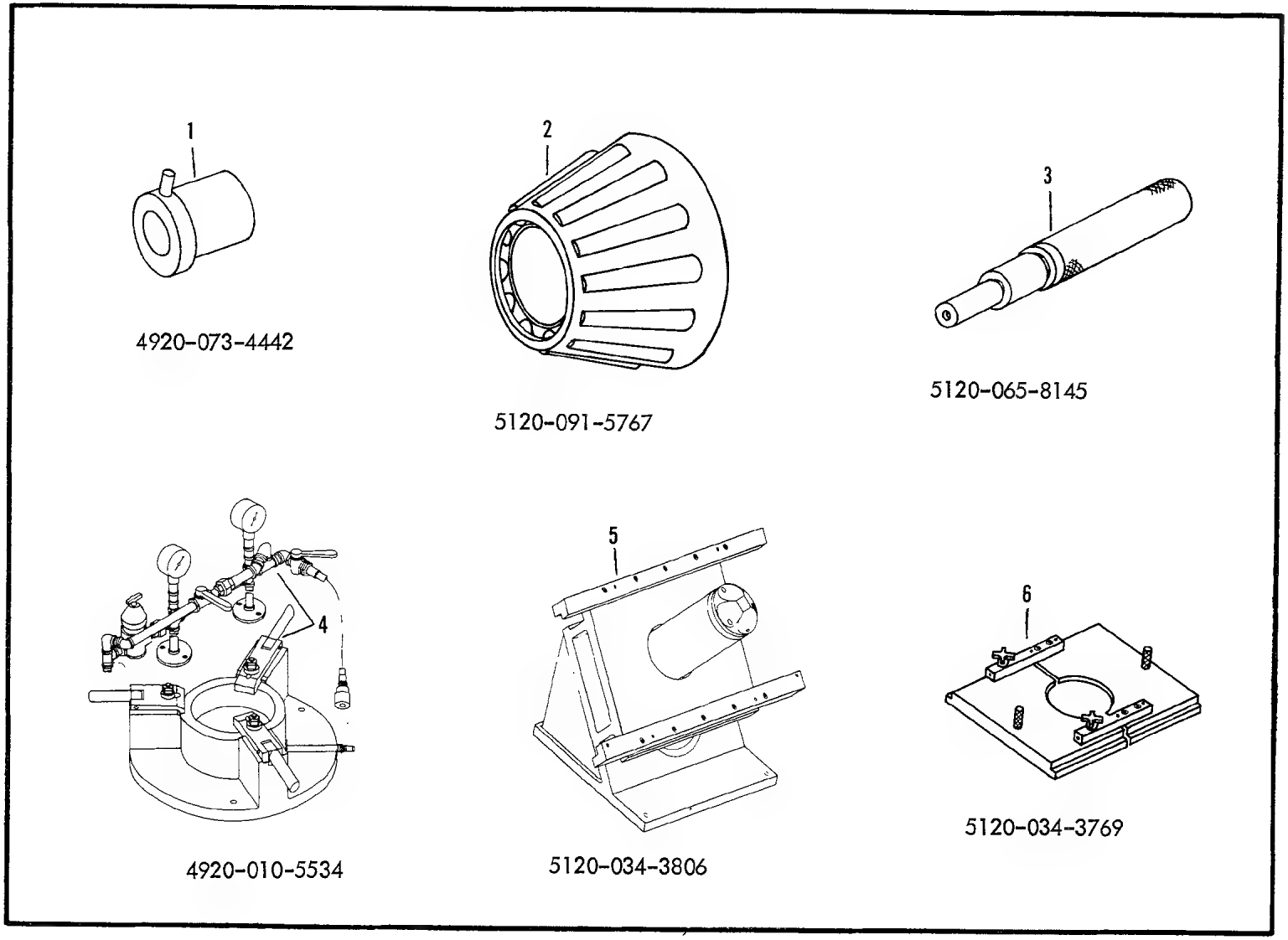

Figure E47. Engine Tools

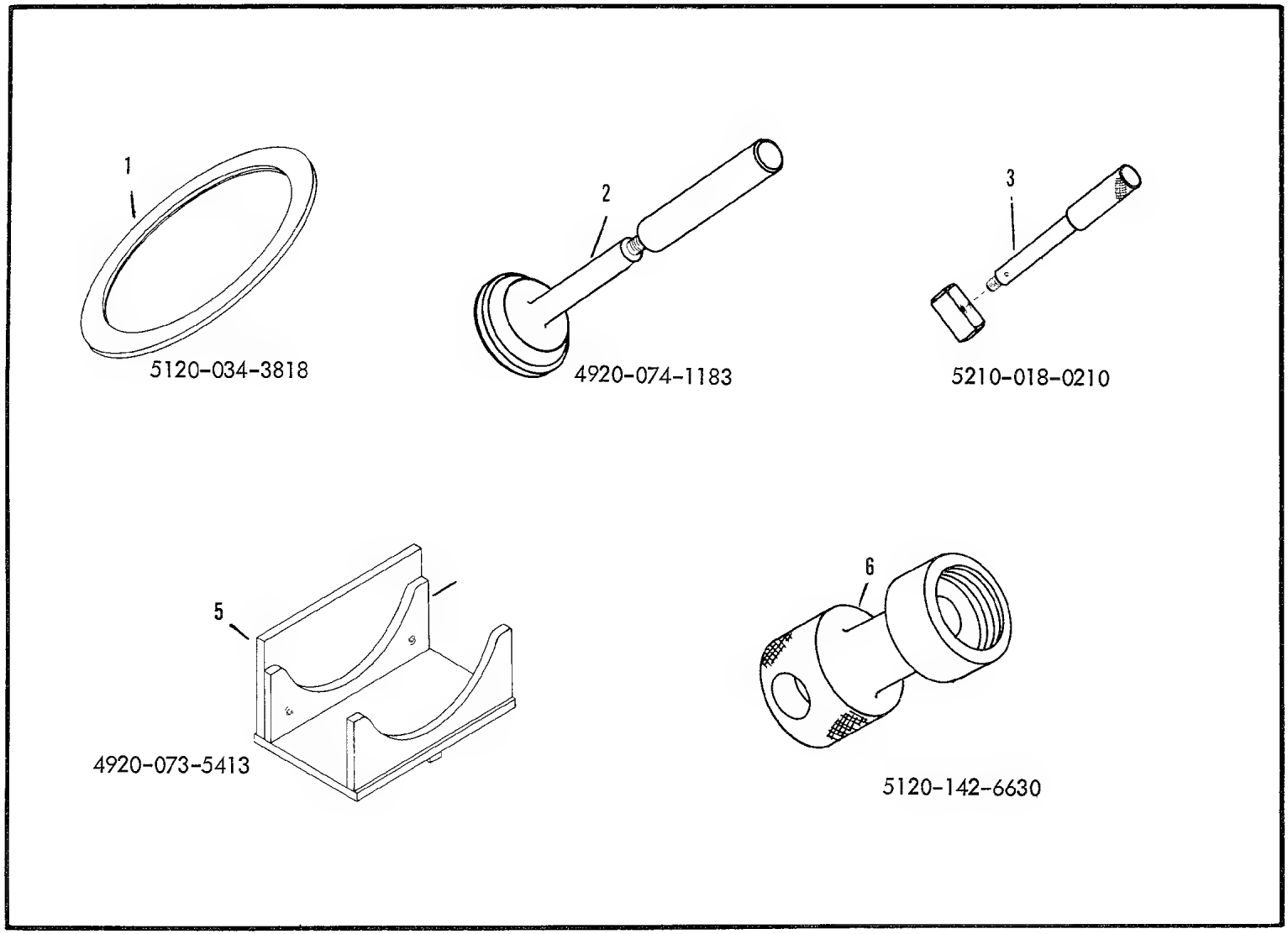

Figure E48. Engine Tools

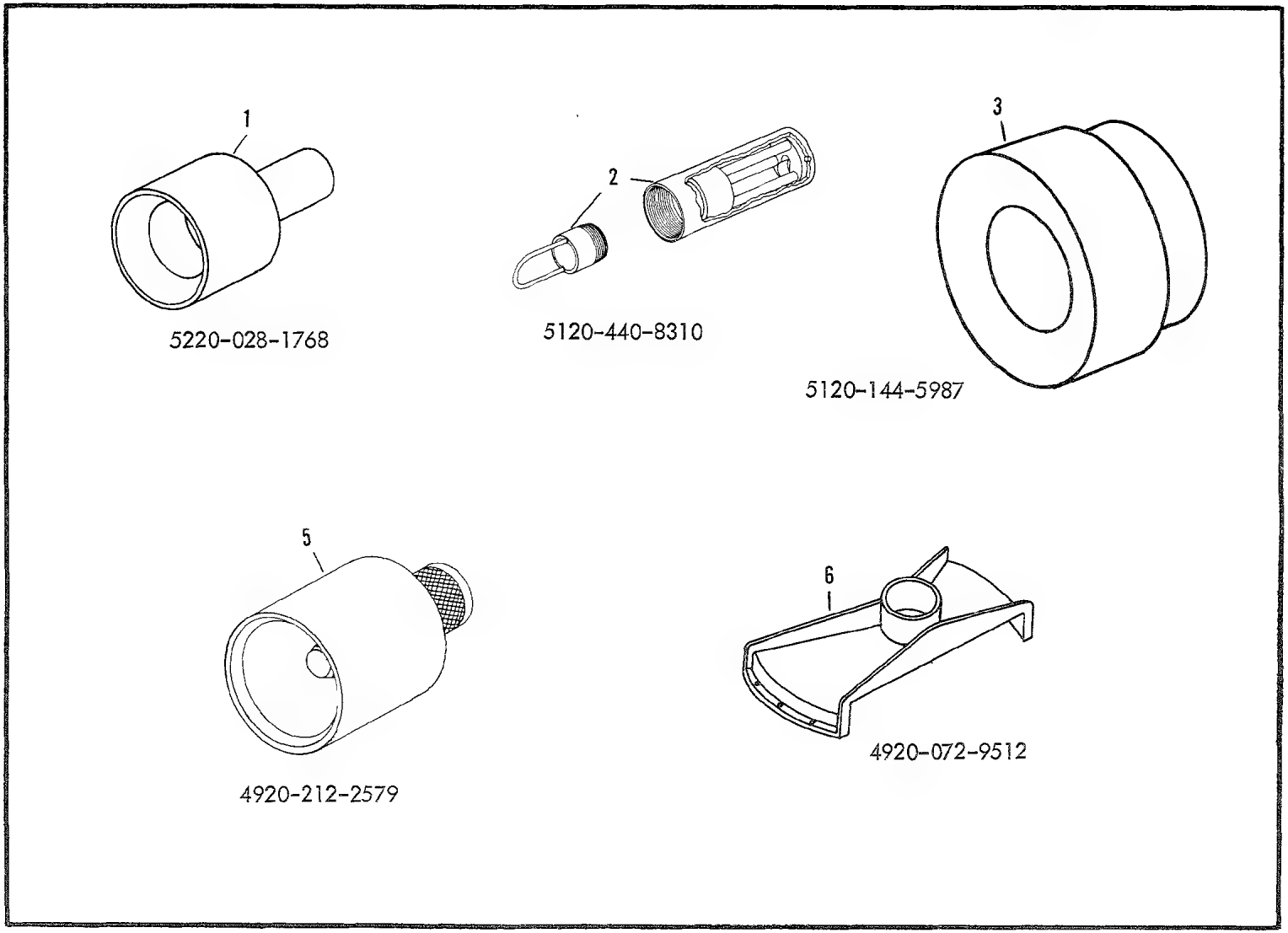

Figure E49. Engine Tools

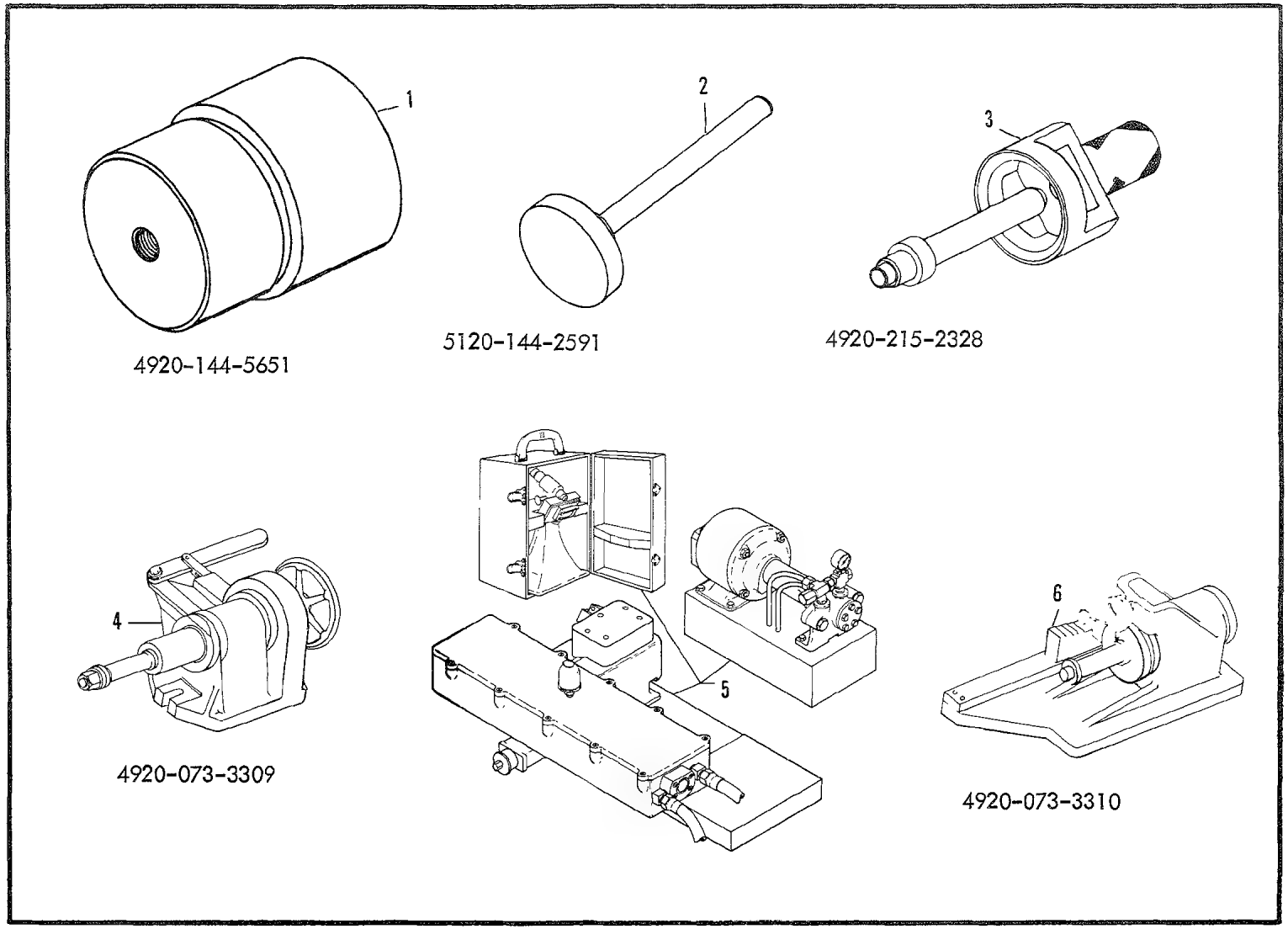

Figure E50. Engine Tools

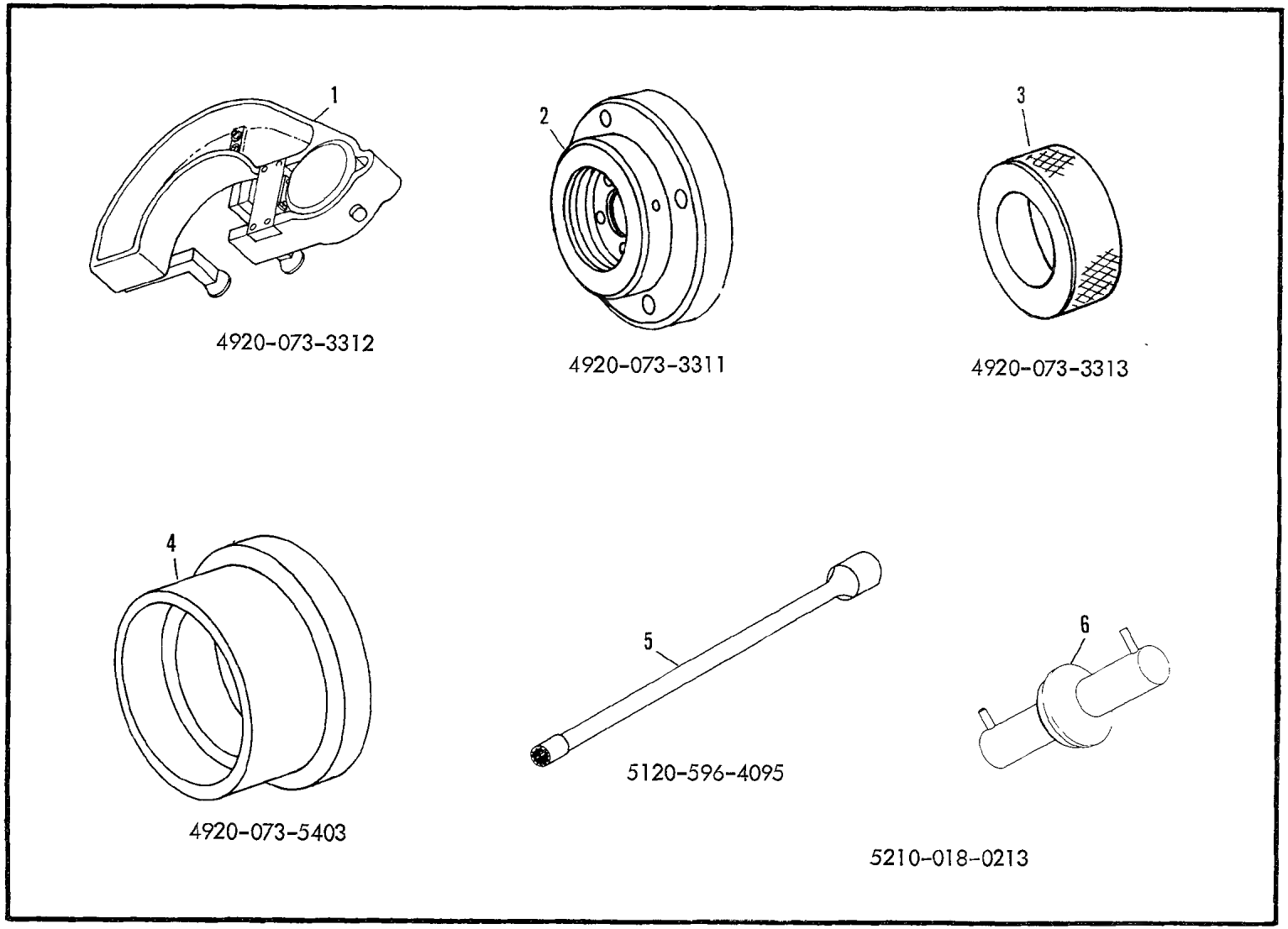

Figure E51. Engine Tools

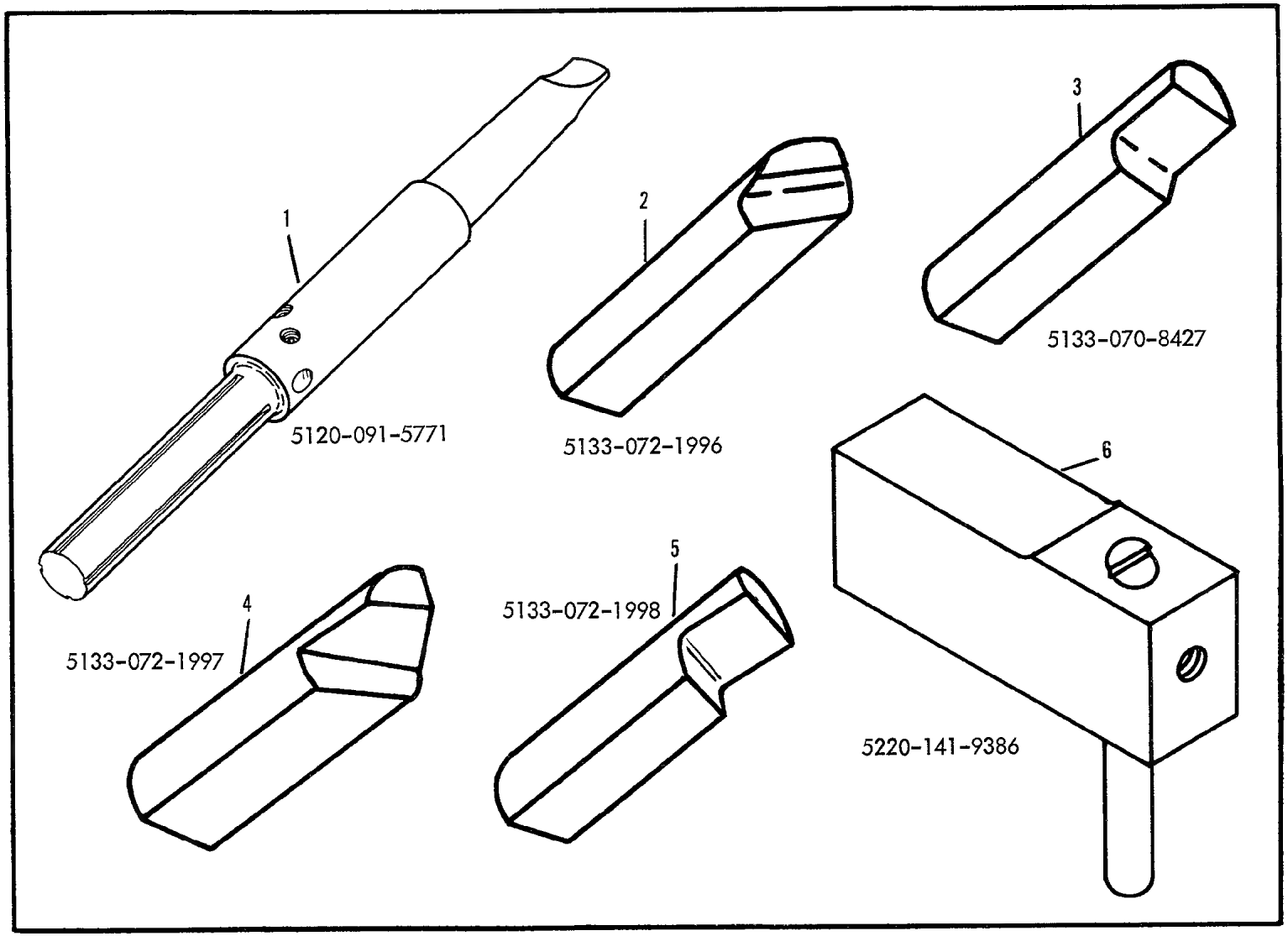

Figure E52. Engine Tools

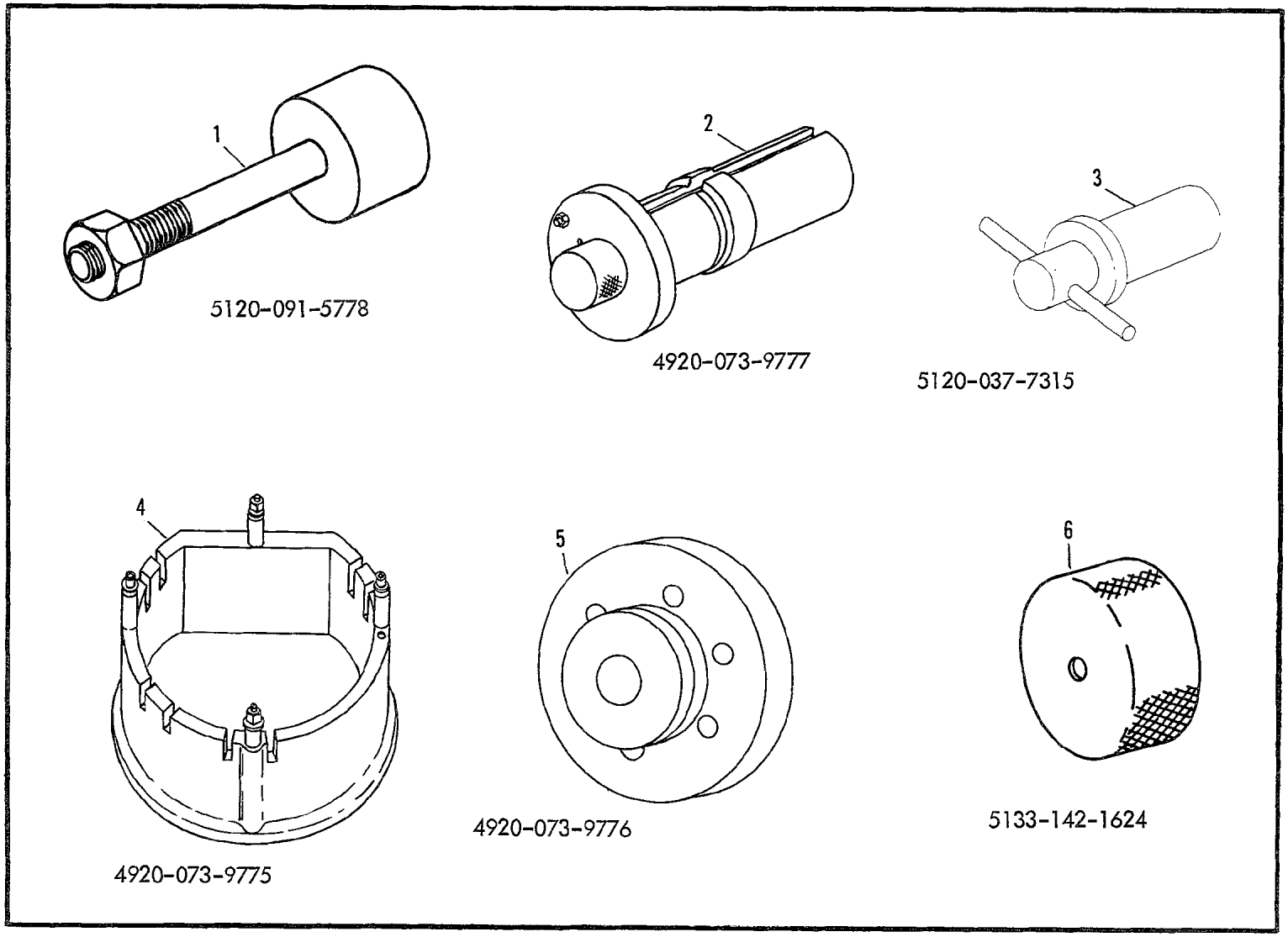

Figure E53. Engine Tools

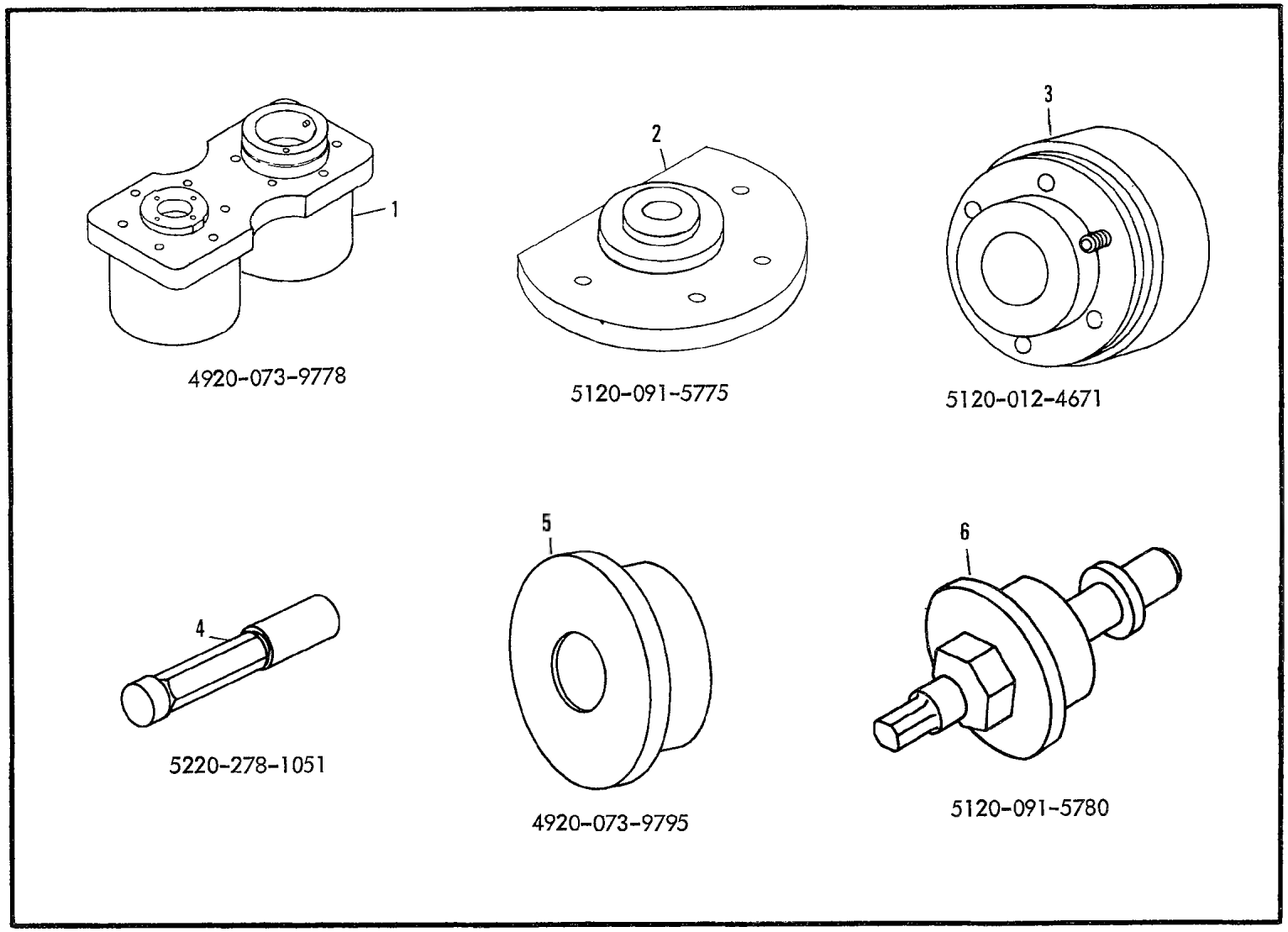

Figure E54. Engine Tools

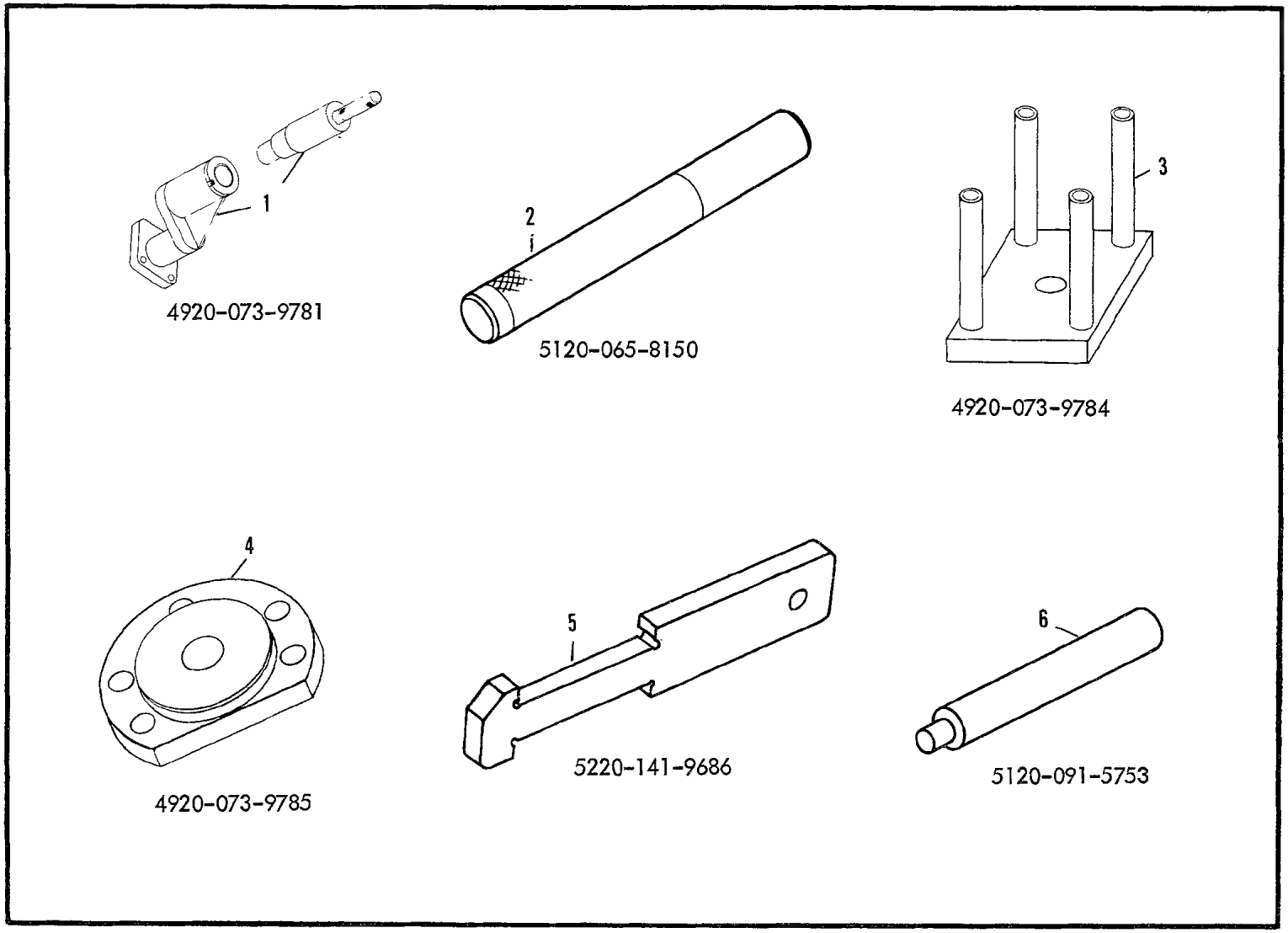

Figure E55. Engine Tools

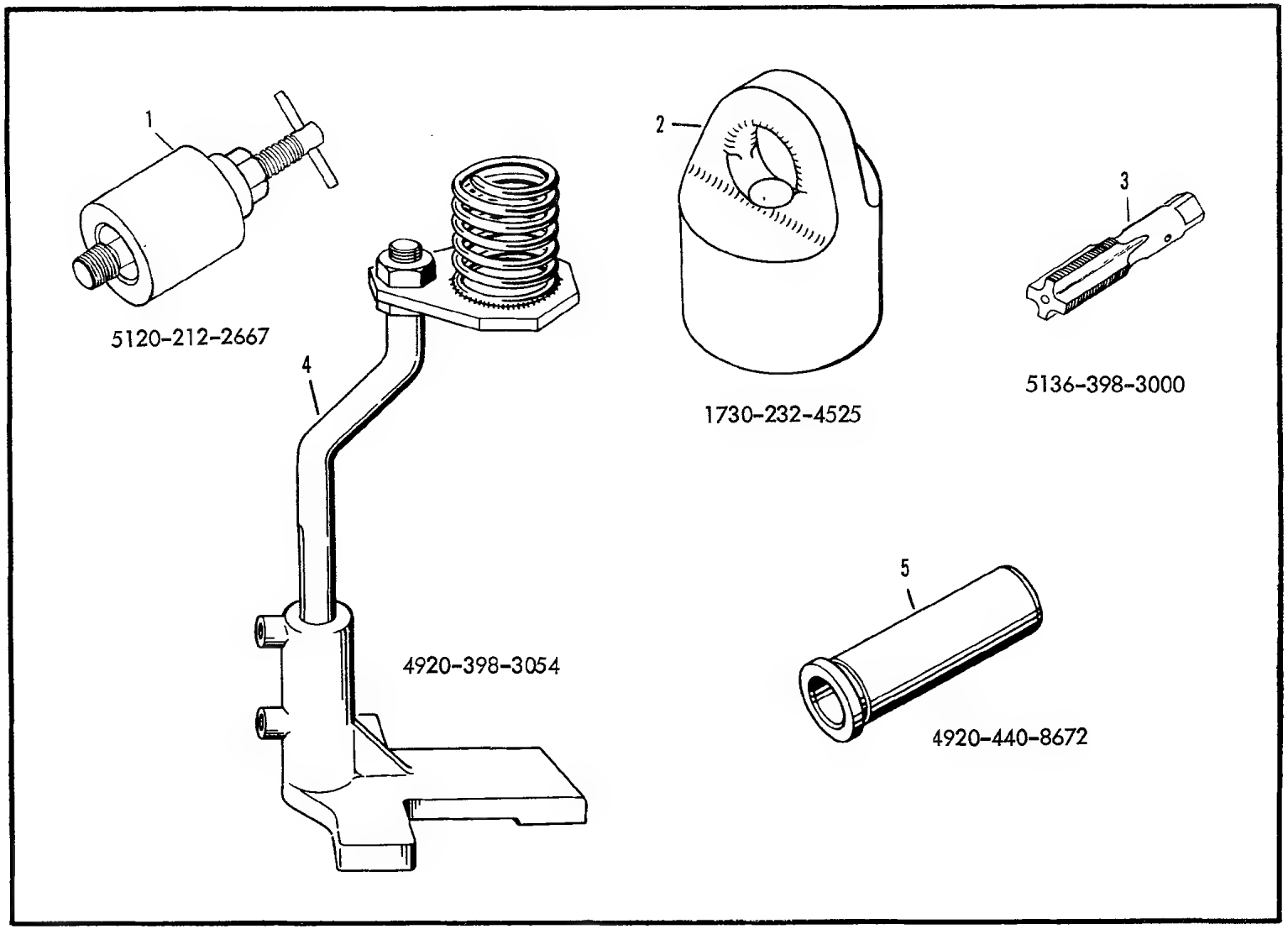

Figure E56. Engine Tools

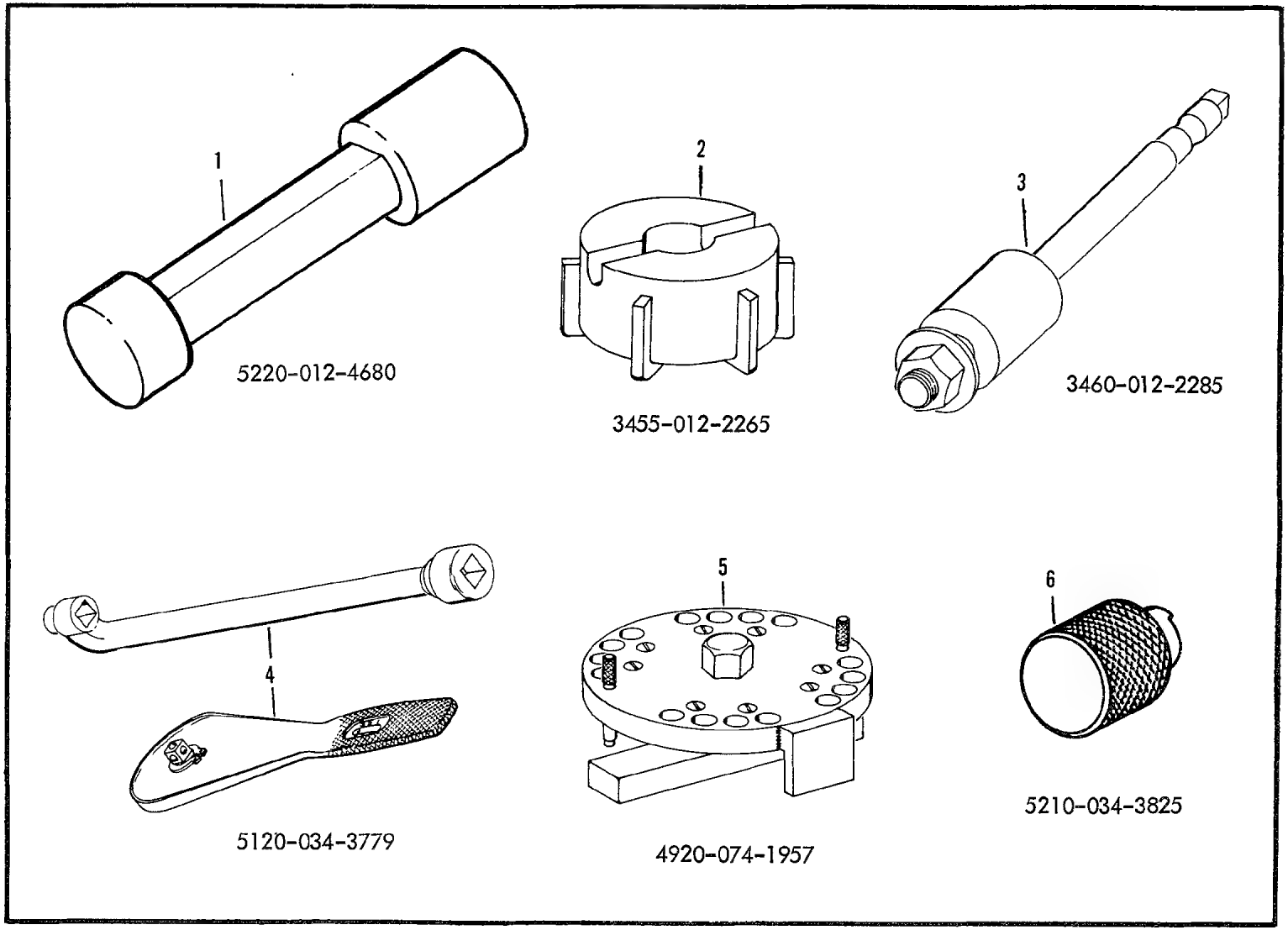

Figure E57. Engine Tools

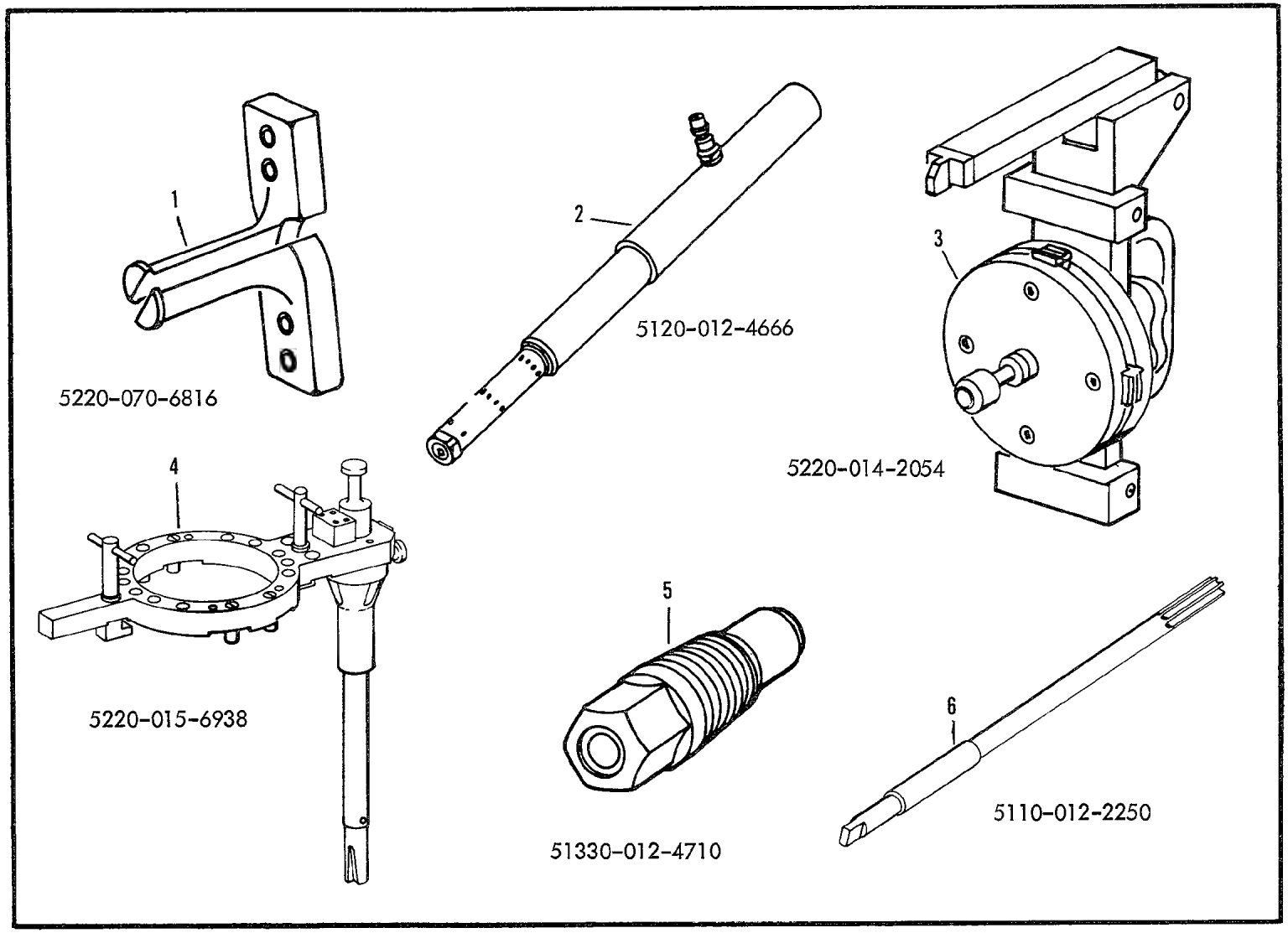

Figure E58. Engine Tools

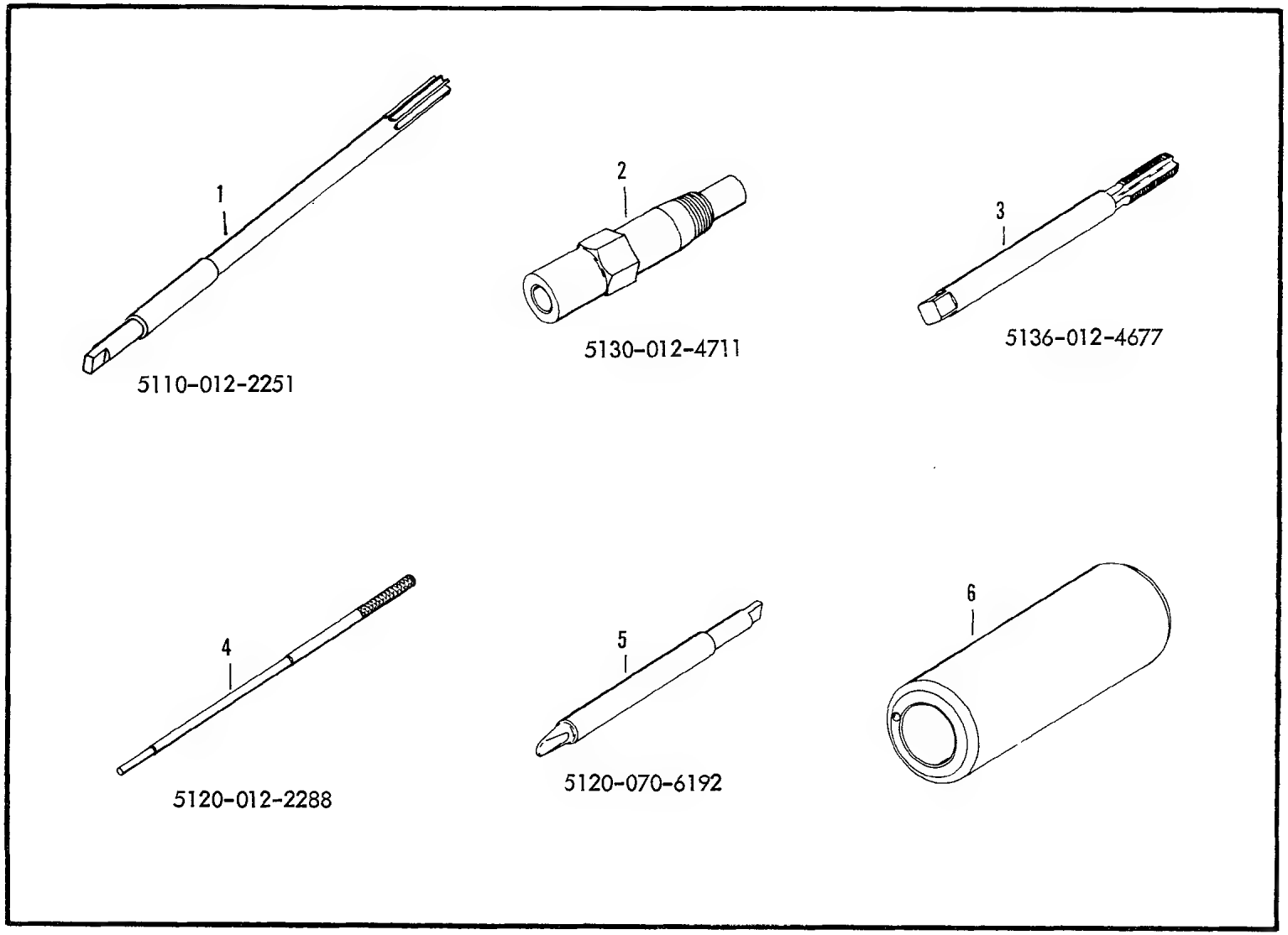

Figure E59. Engine Tools

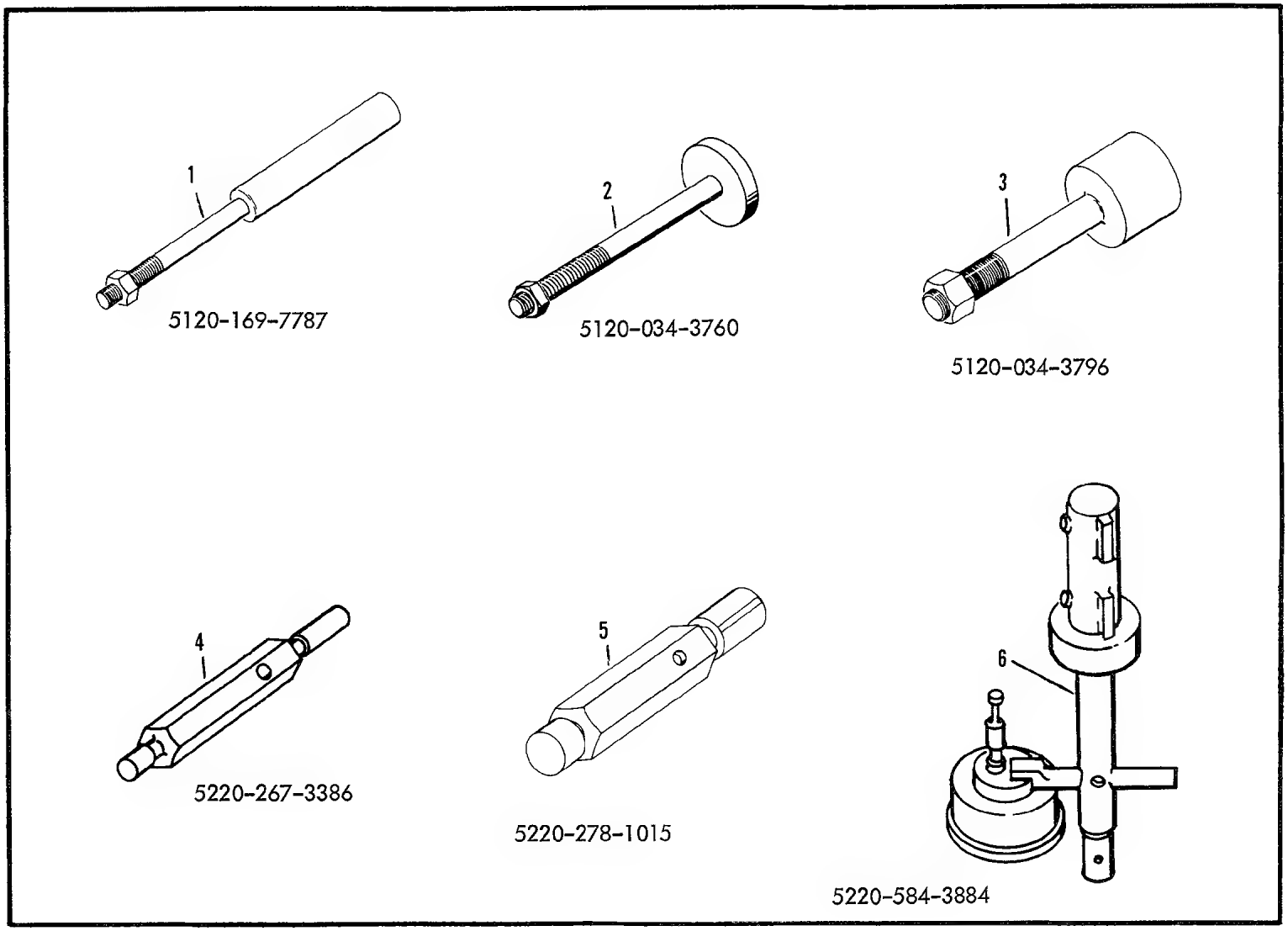

Figure E60. Engine Tools

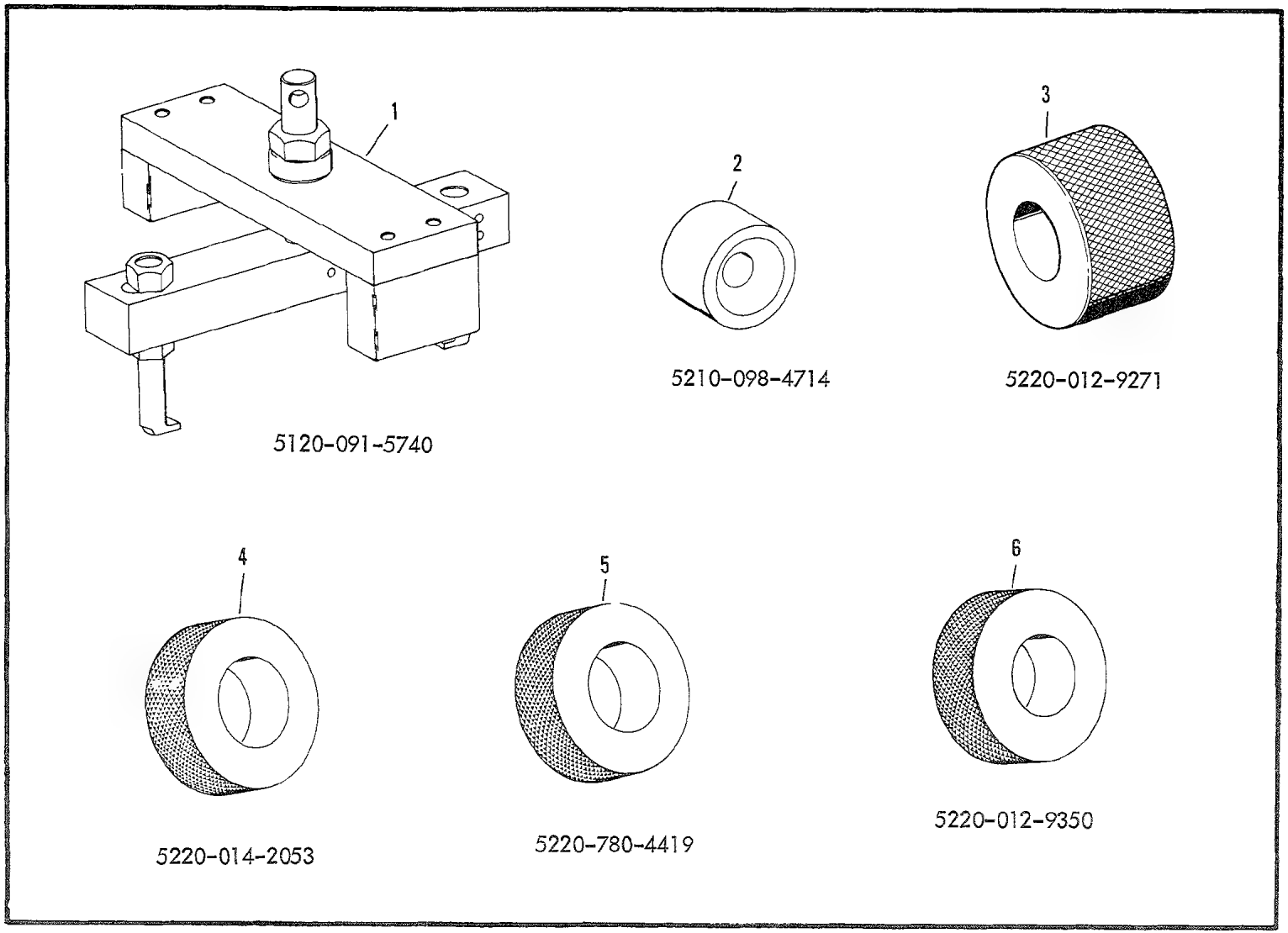

Figure E61. Engine Tools

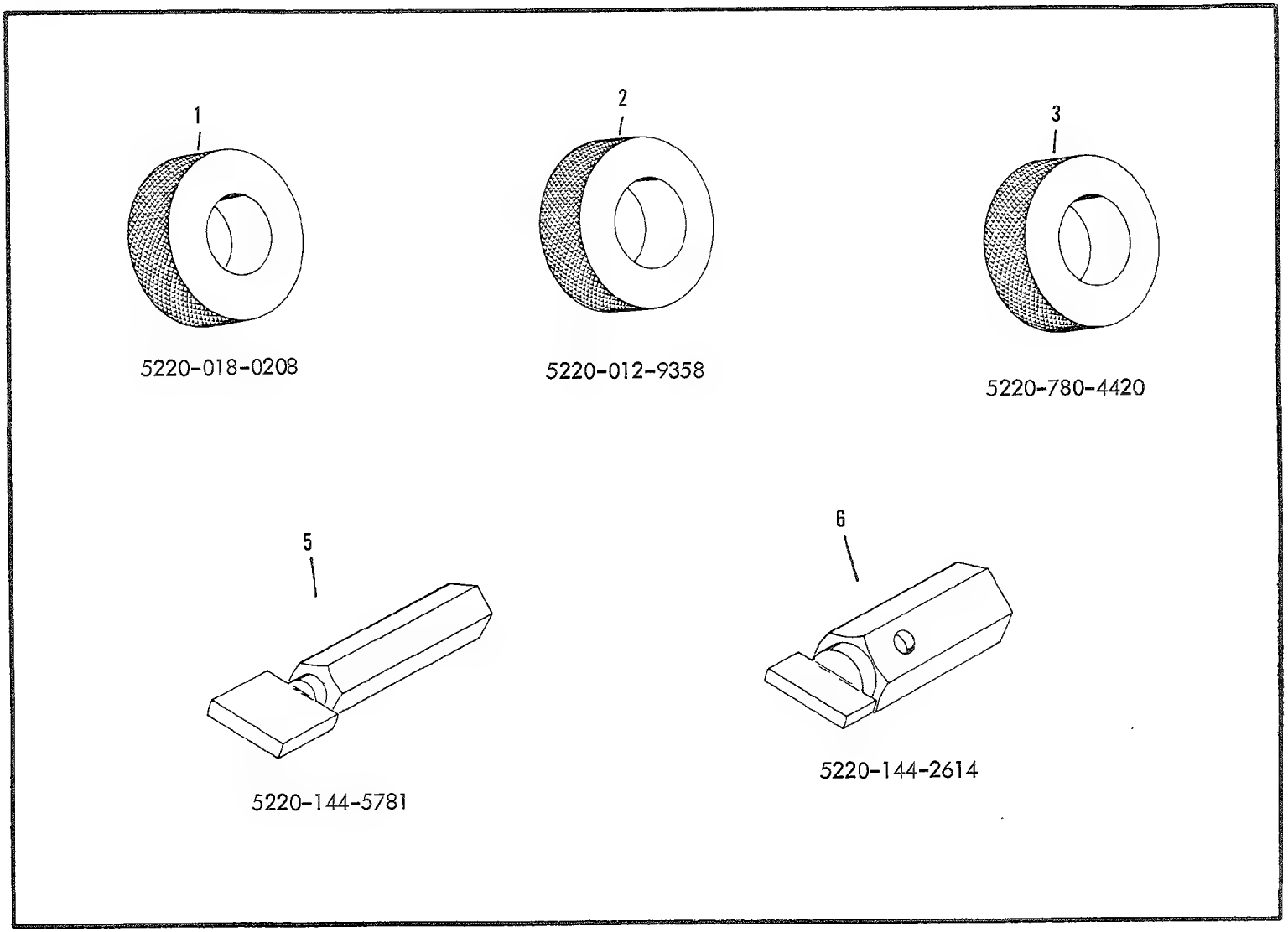

Figure E62. Engine Tools

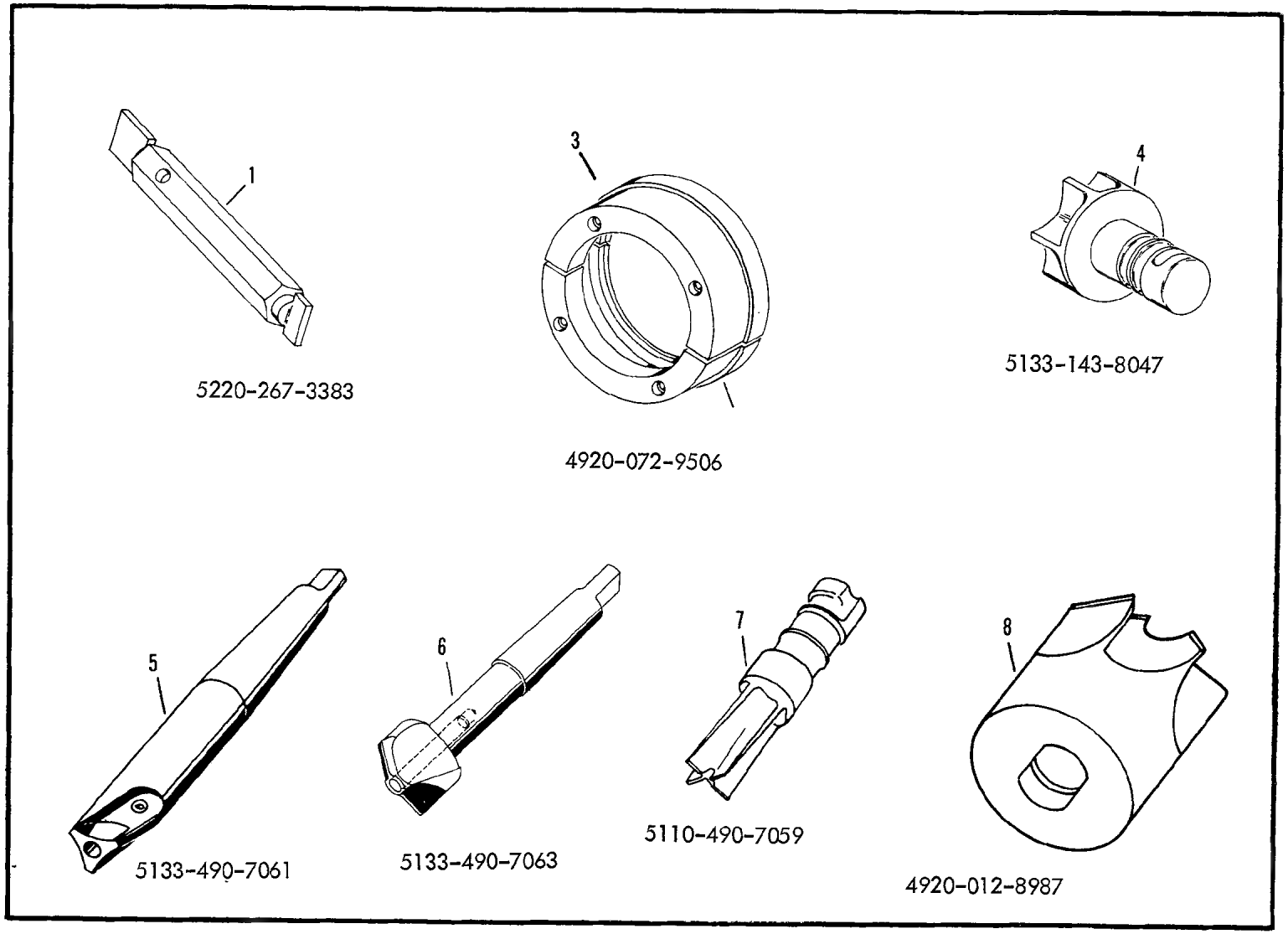

Figure E63. Engine Tools

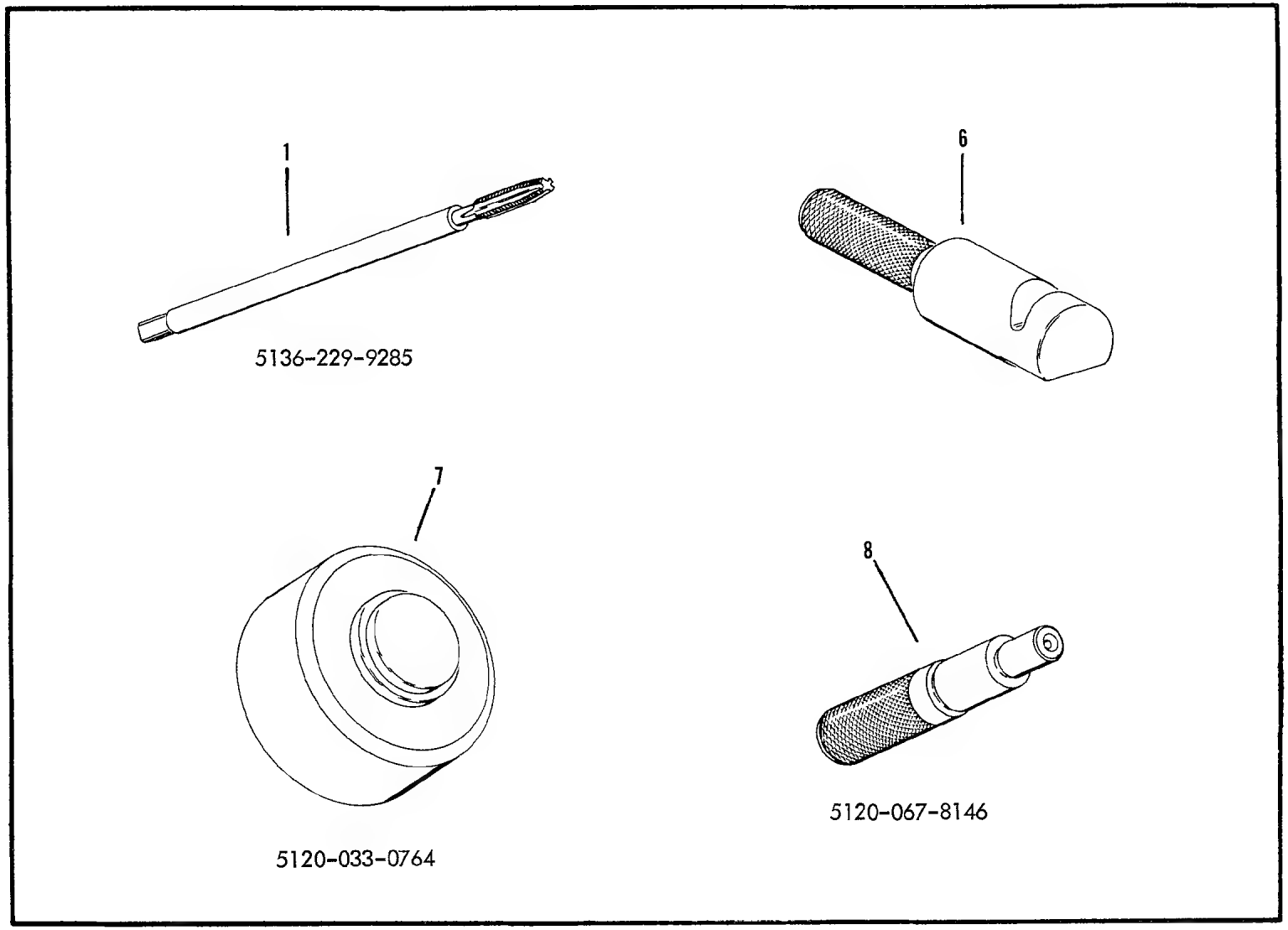

Figure E64. Engine Tools

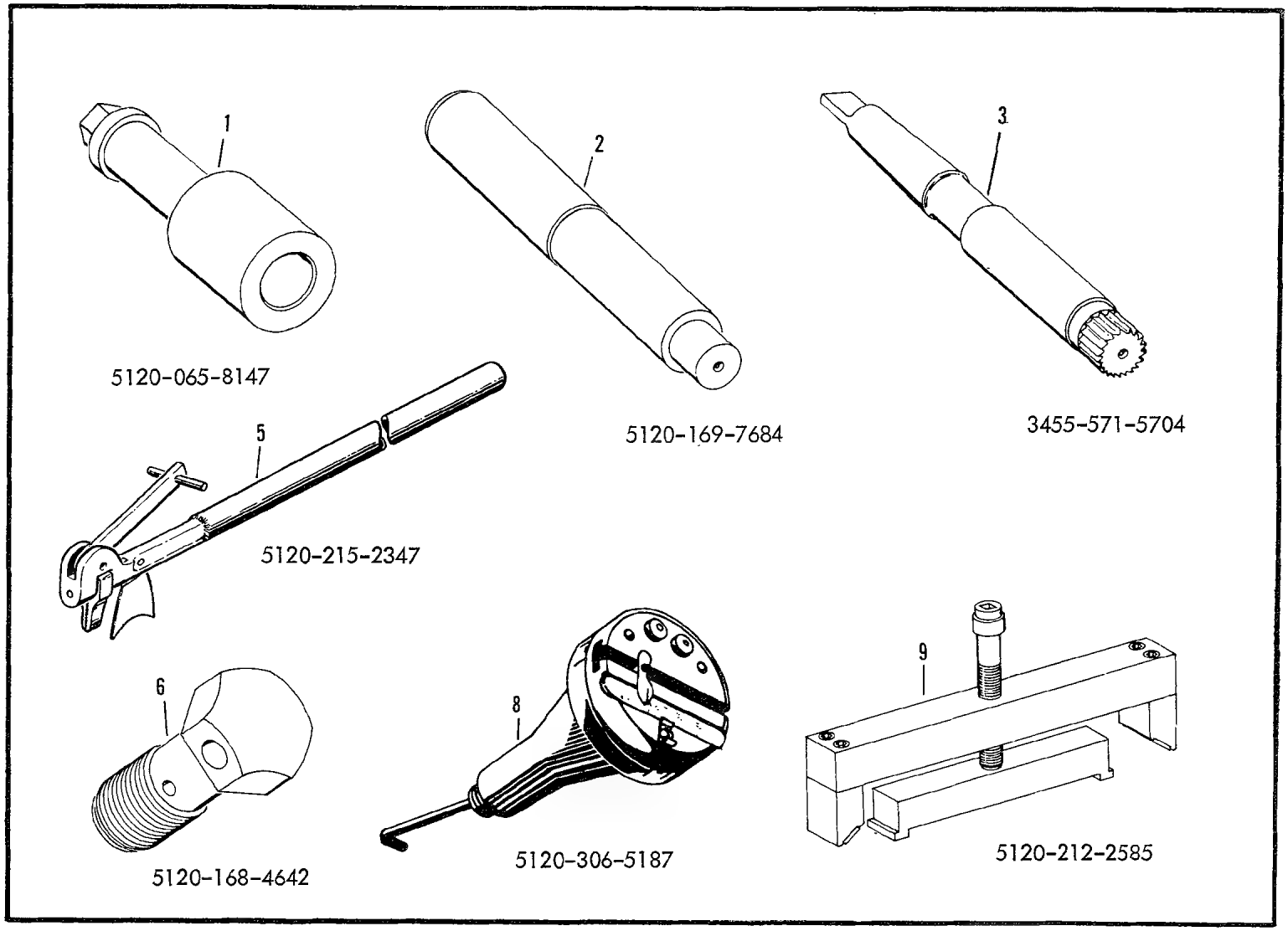

Figure E65. Engine Tools

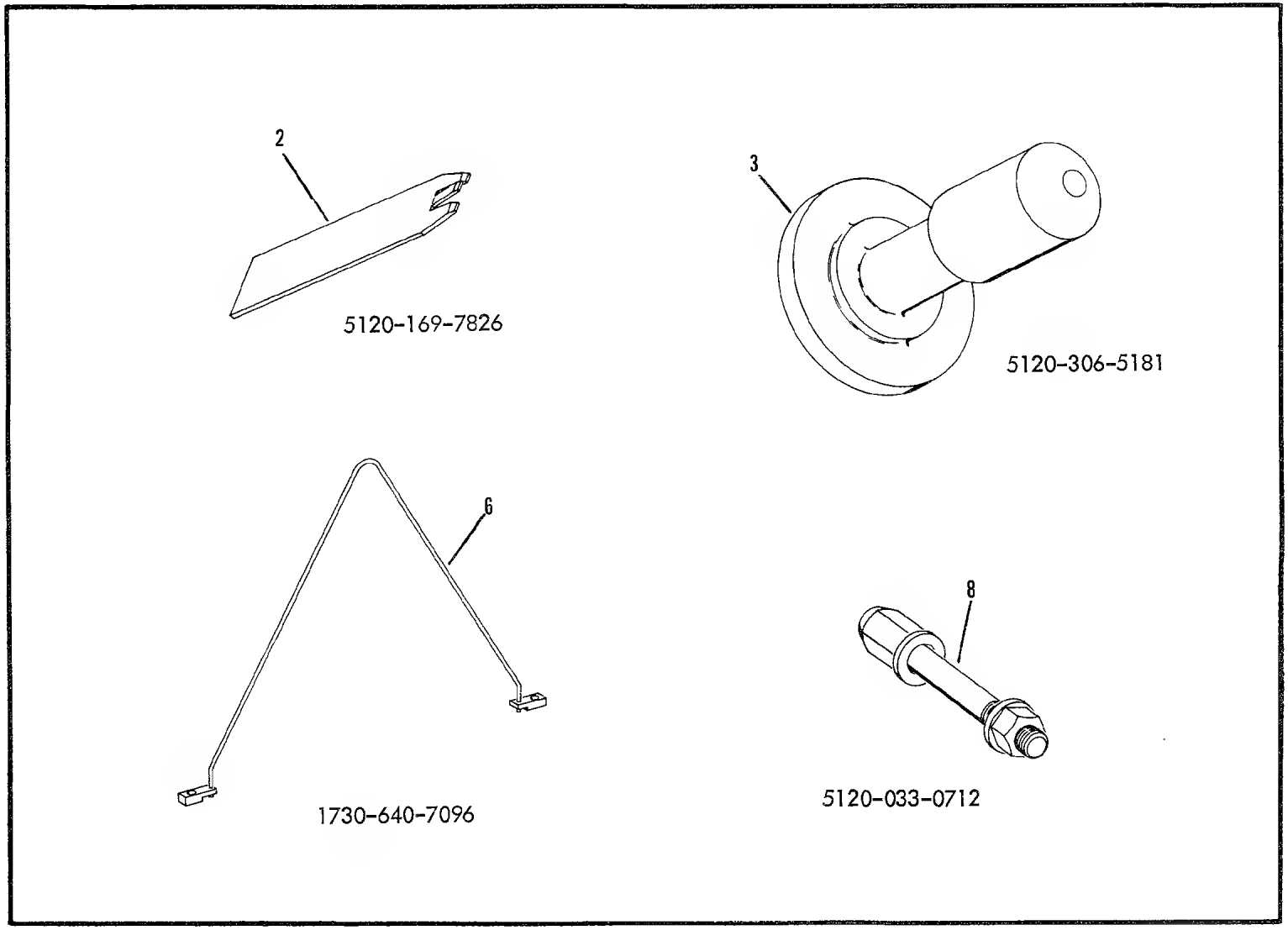

Figure E66. Engine Tools

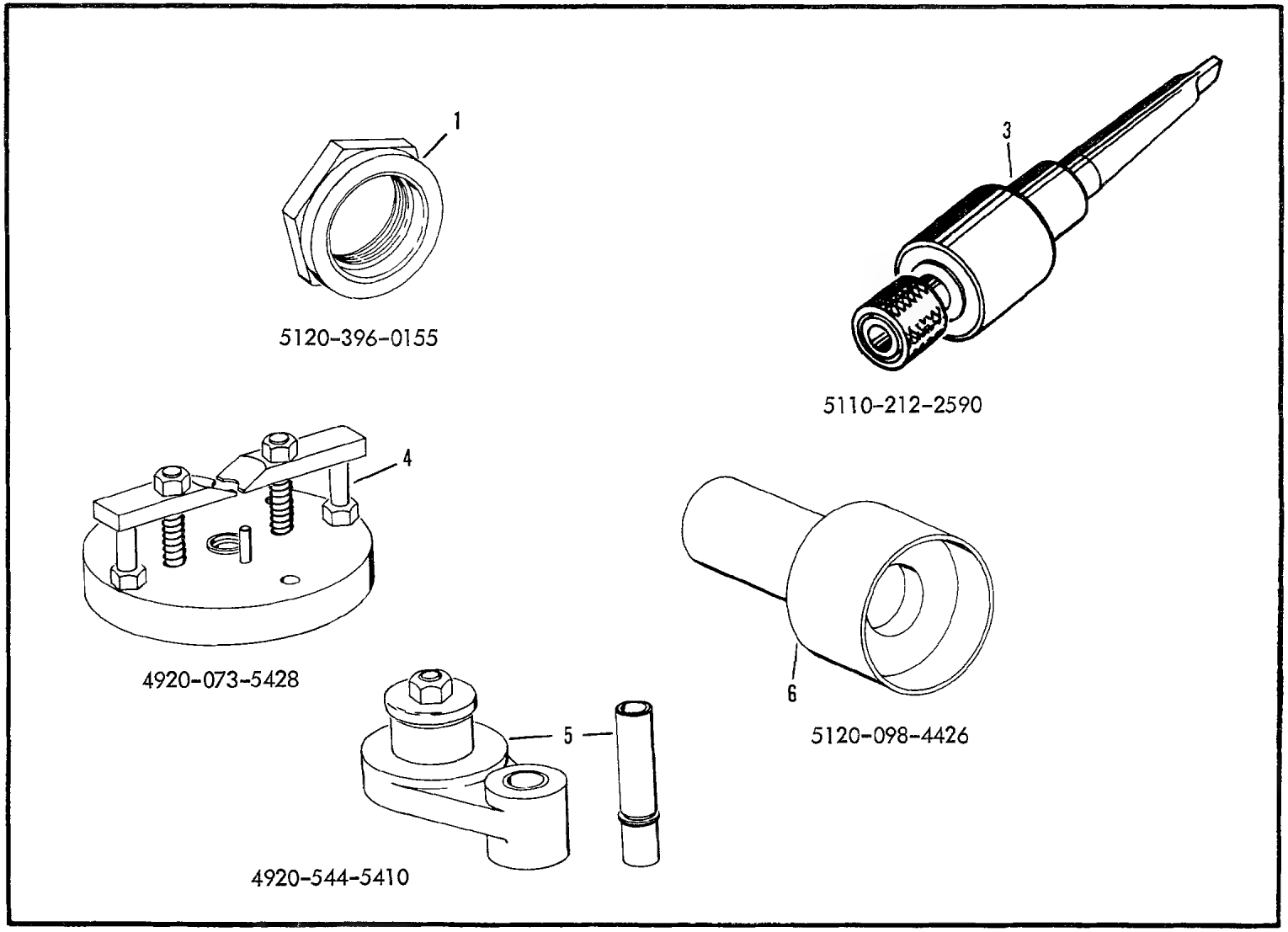

Figure E67. Engine Tools

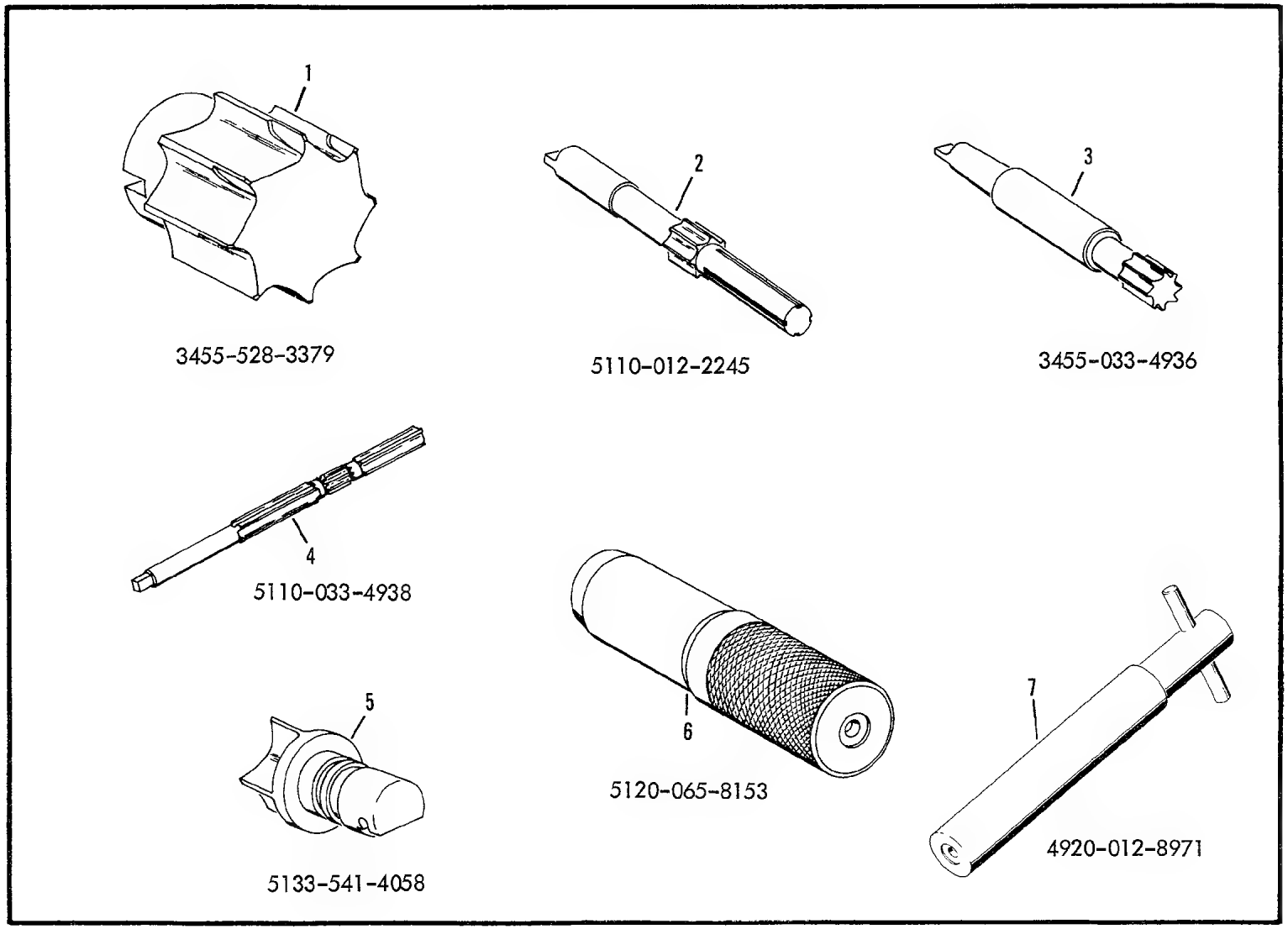

Figure E68. Engine Tools

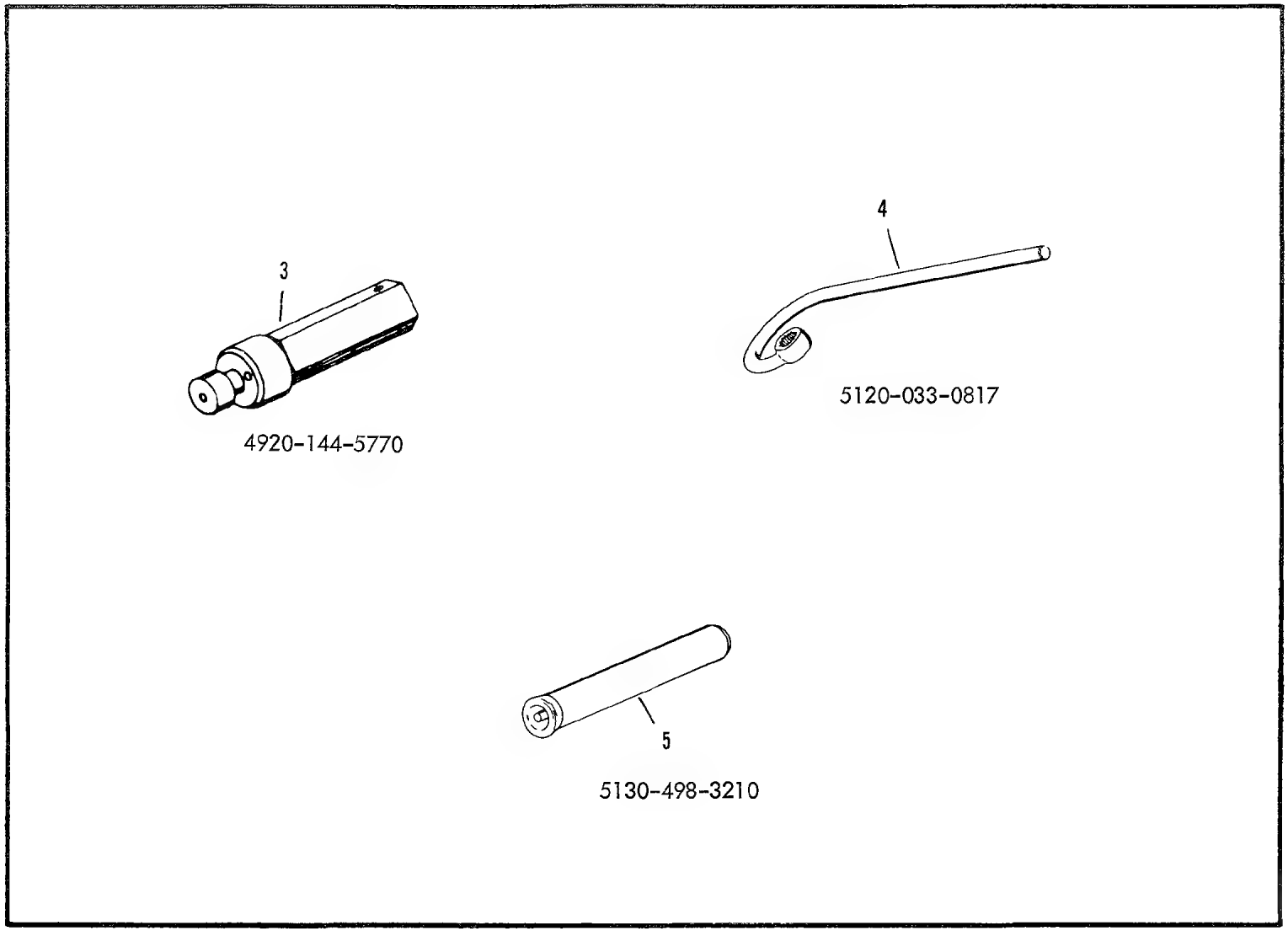

Figure E69. Engine Tools

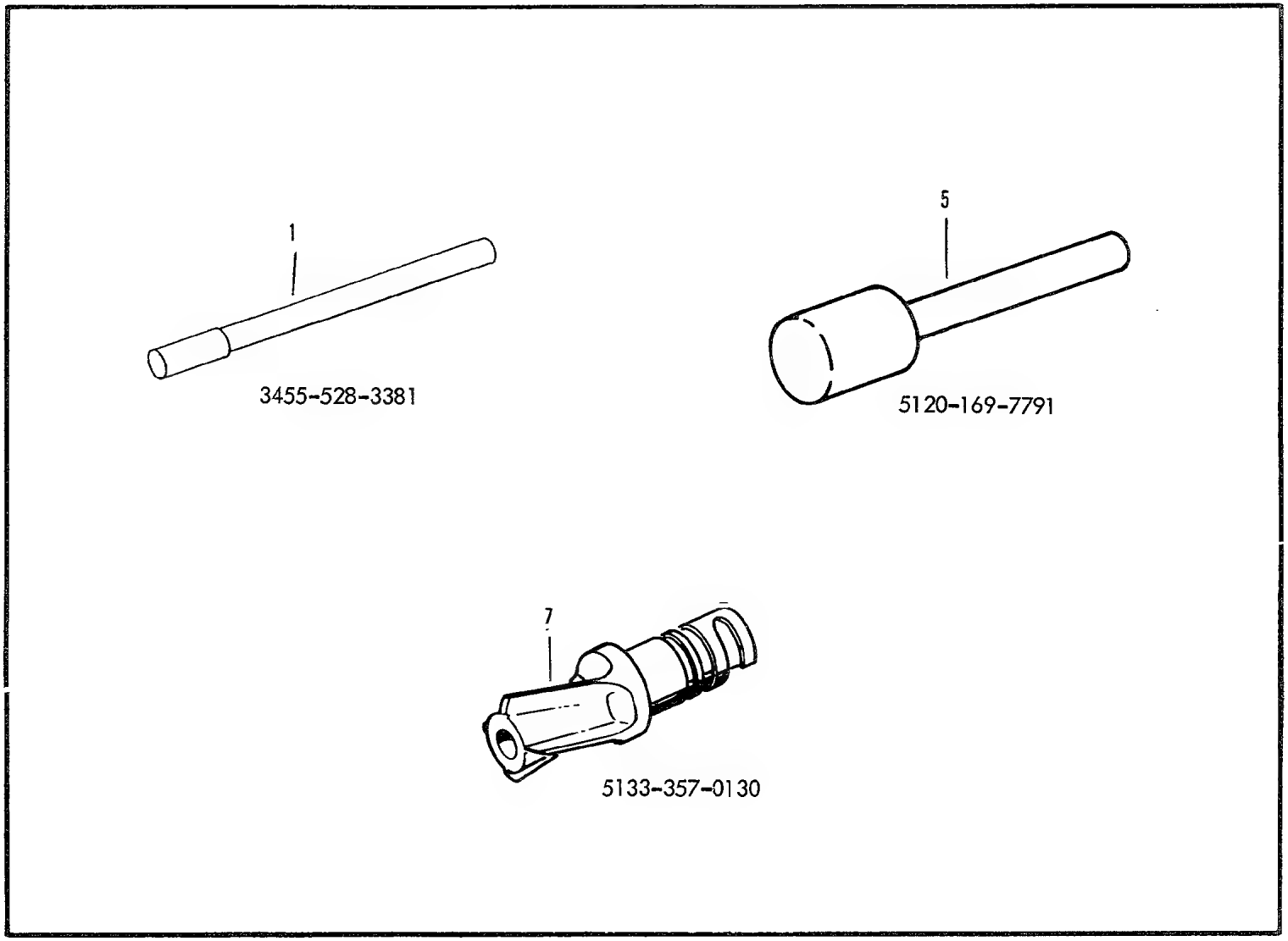

Figure E70. Engine Tools

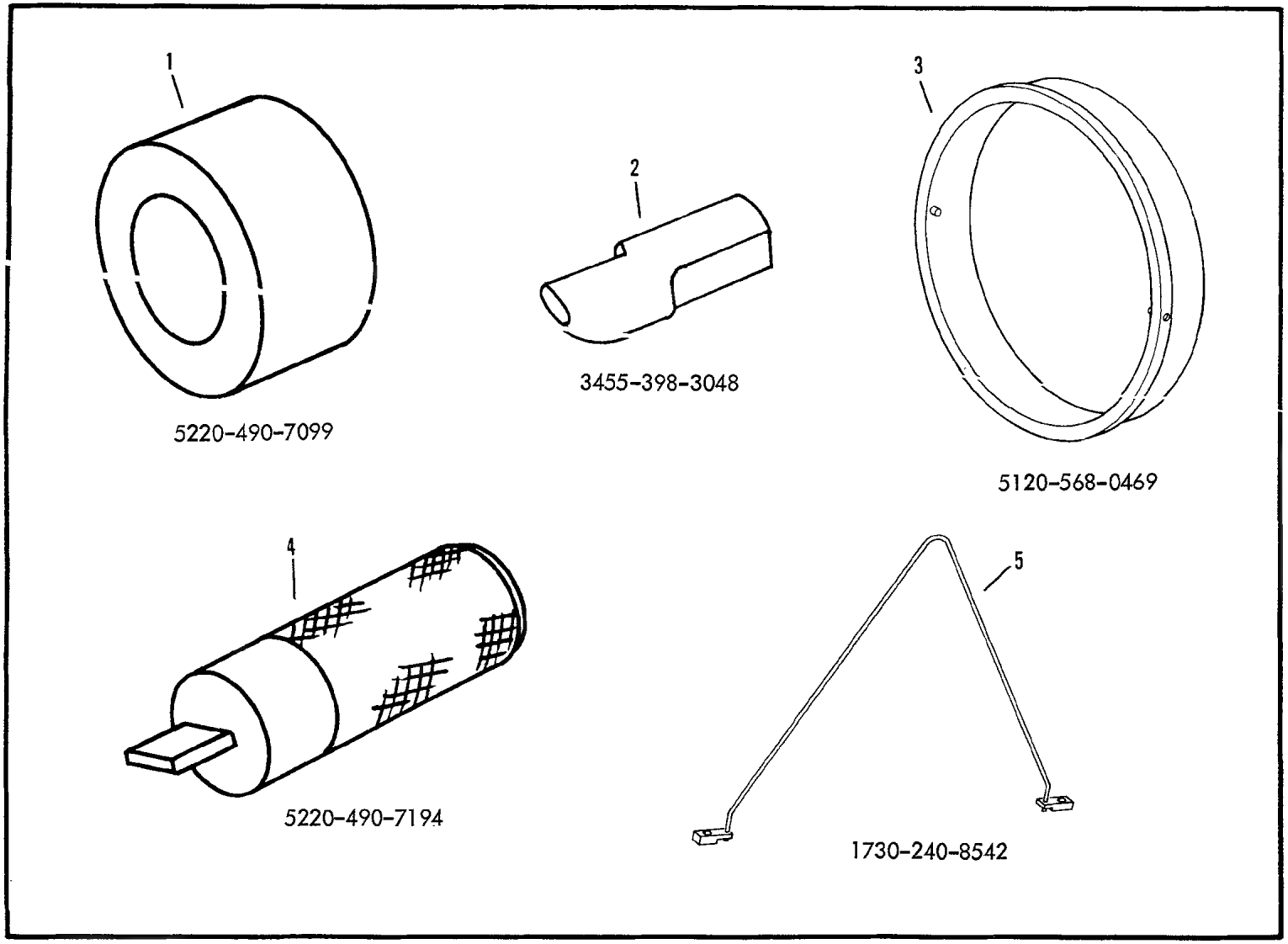

Figure E71. Engine Tools

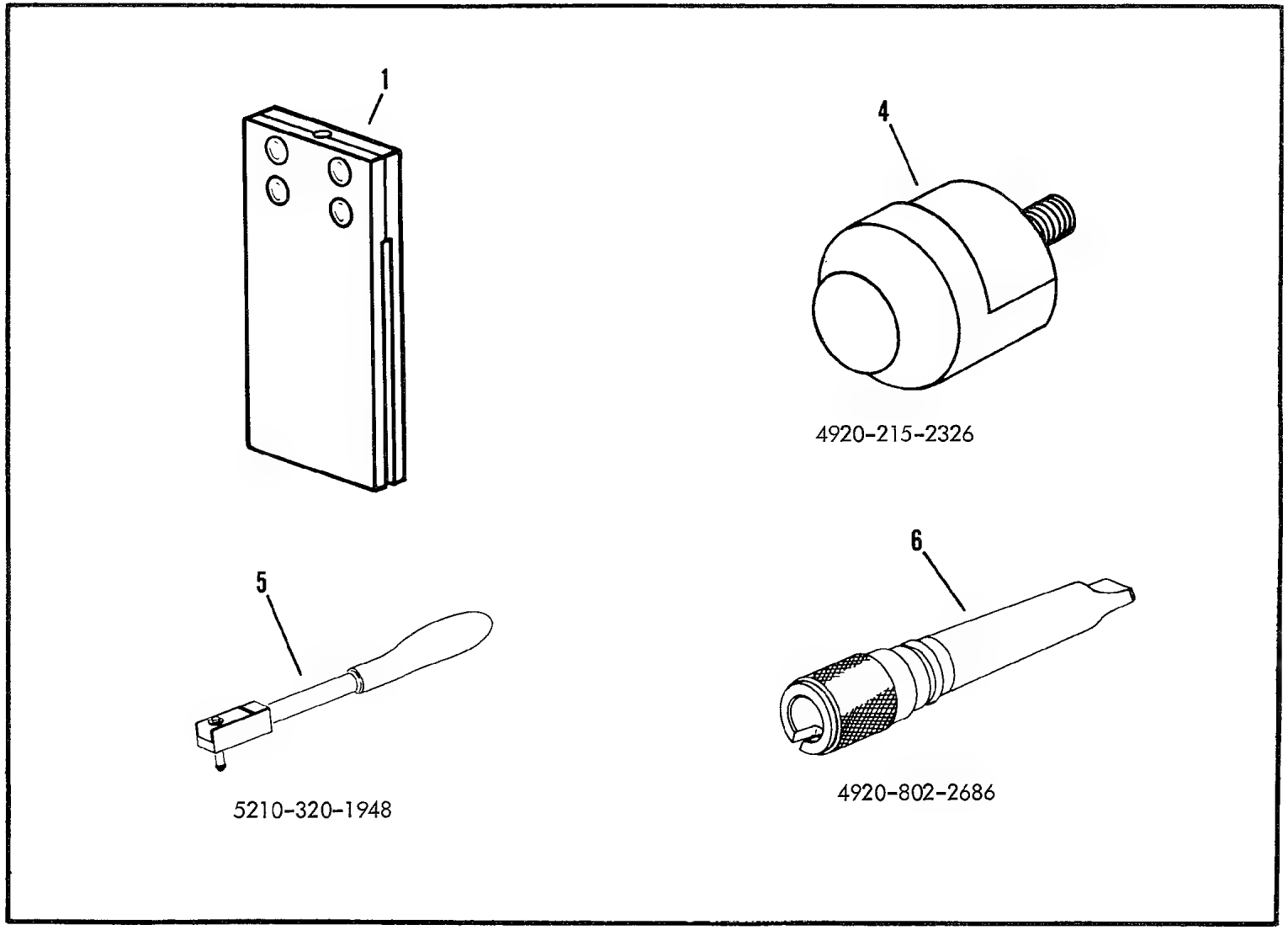

Figure E72. Engine Tools

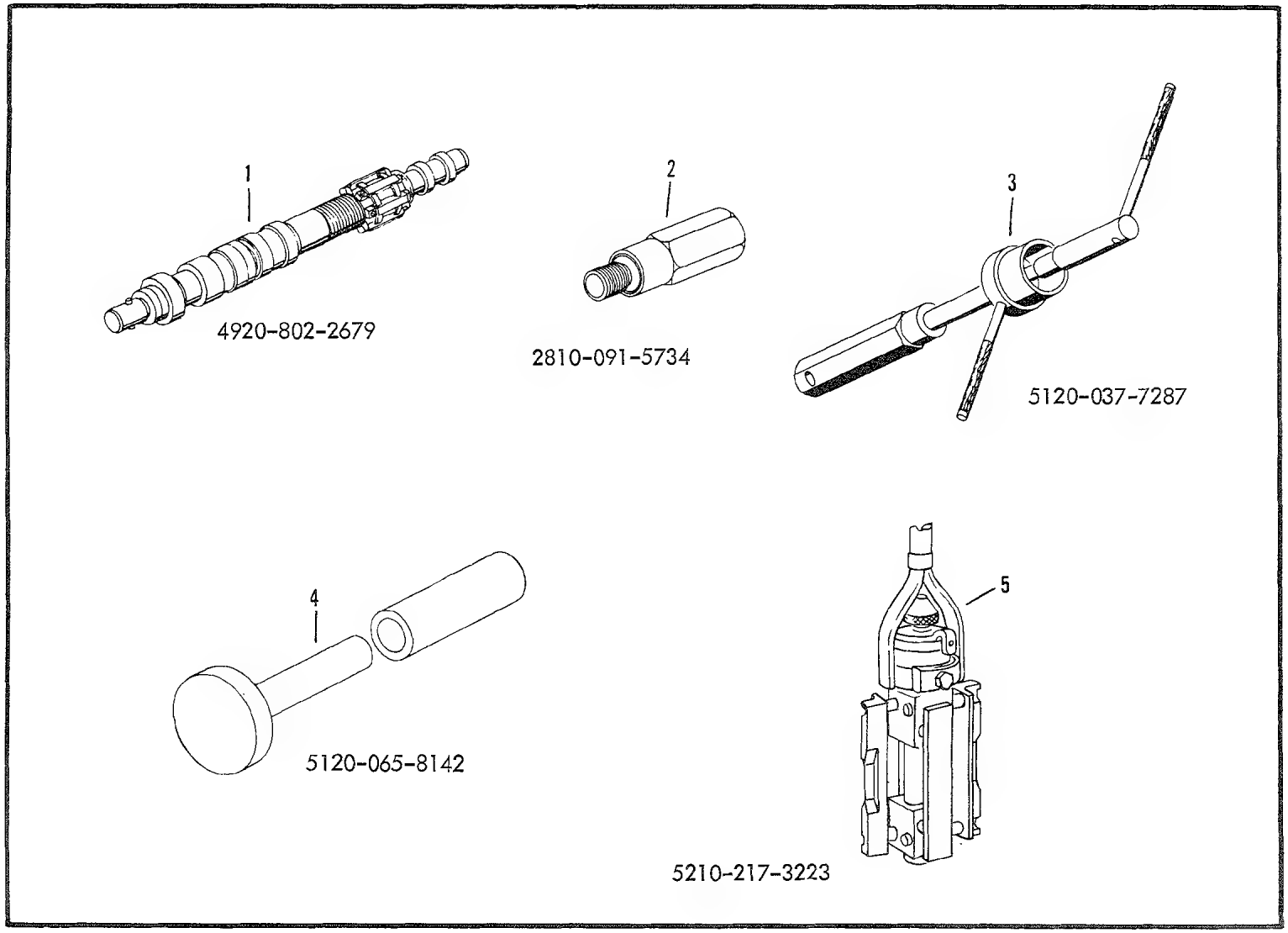

Figure E73. Engine Tools

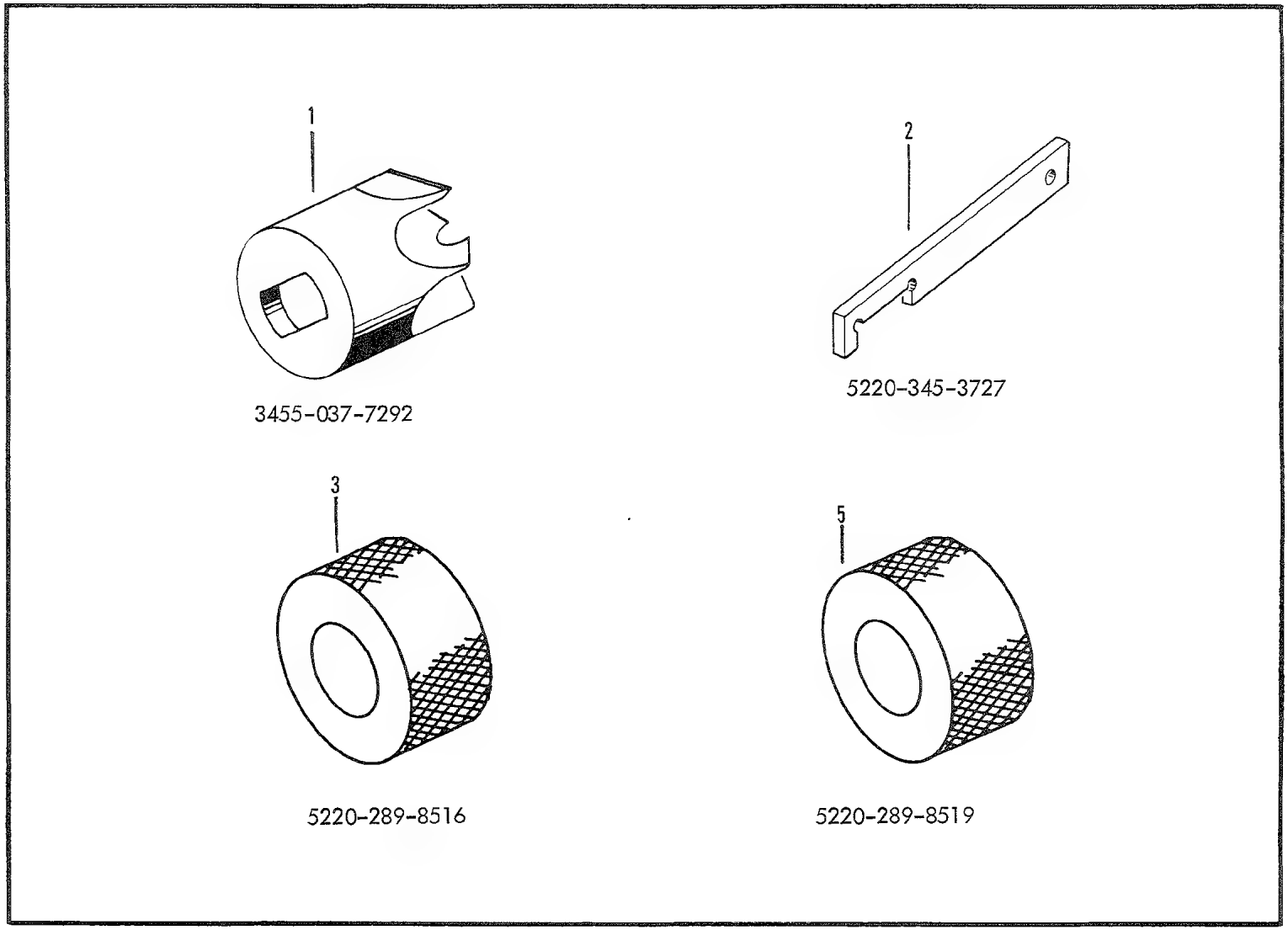

Figure E74. Engine Tools

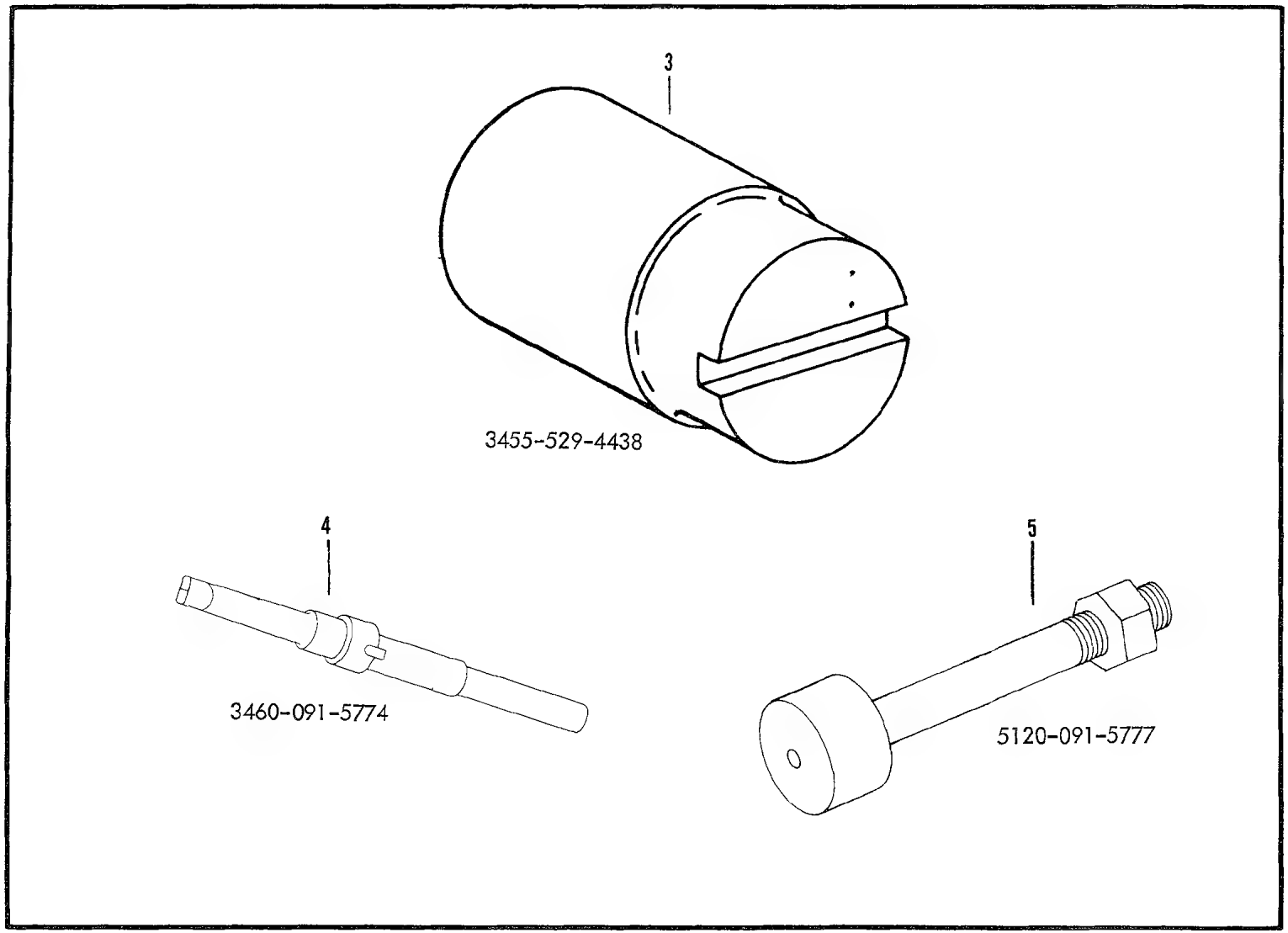

Figure E75. Engine Tools

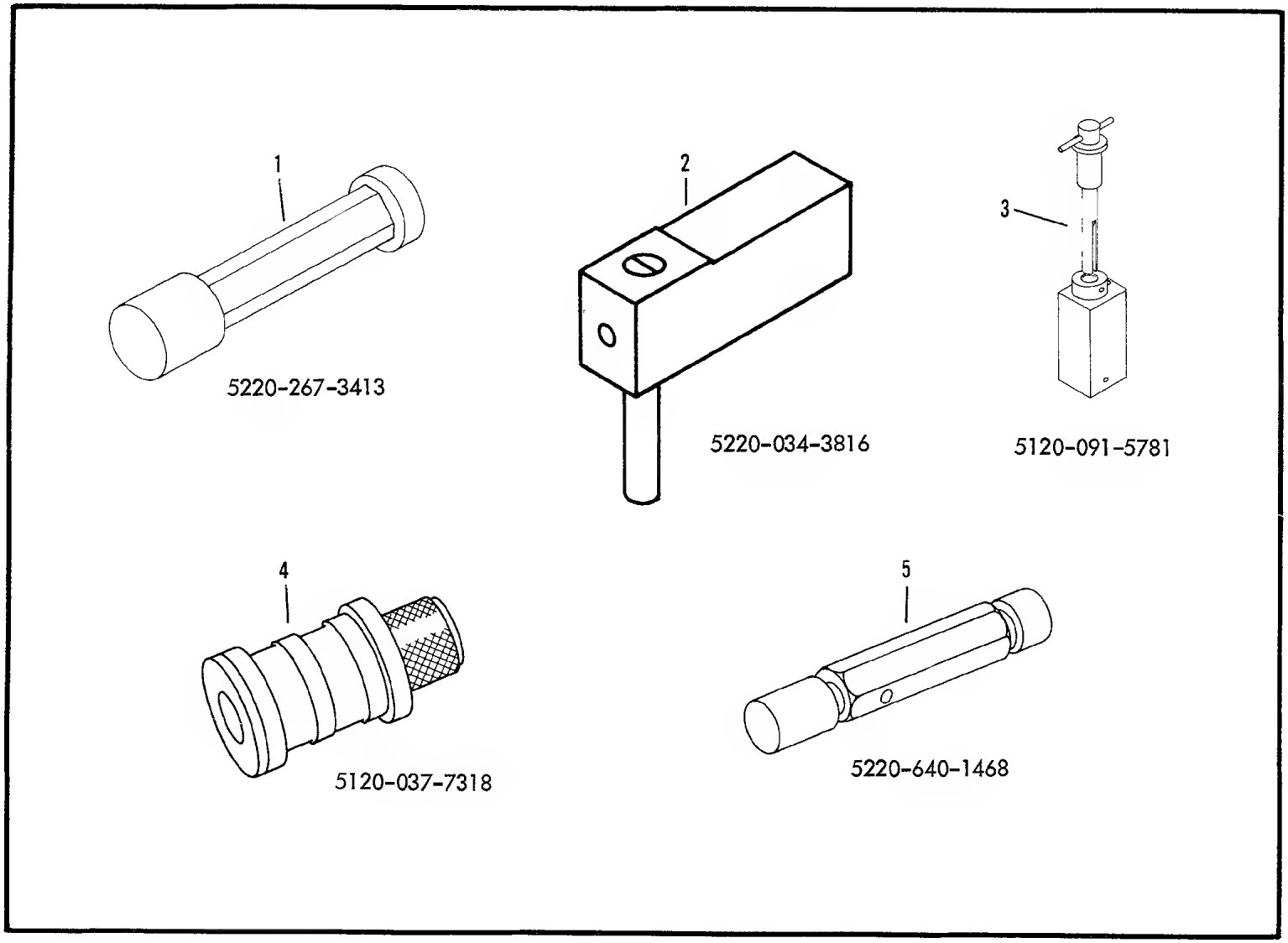

Figure E76. Engine Tools

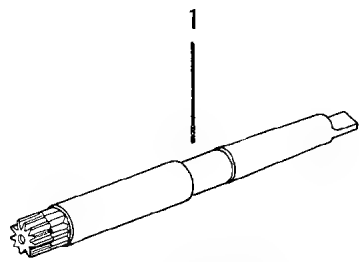

3455-571-5703

Figure E77. Engine Tools

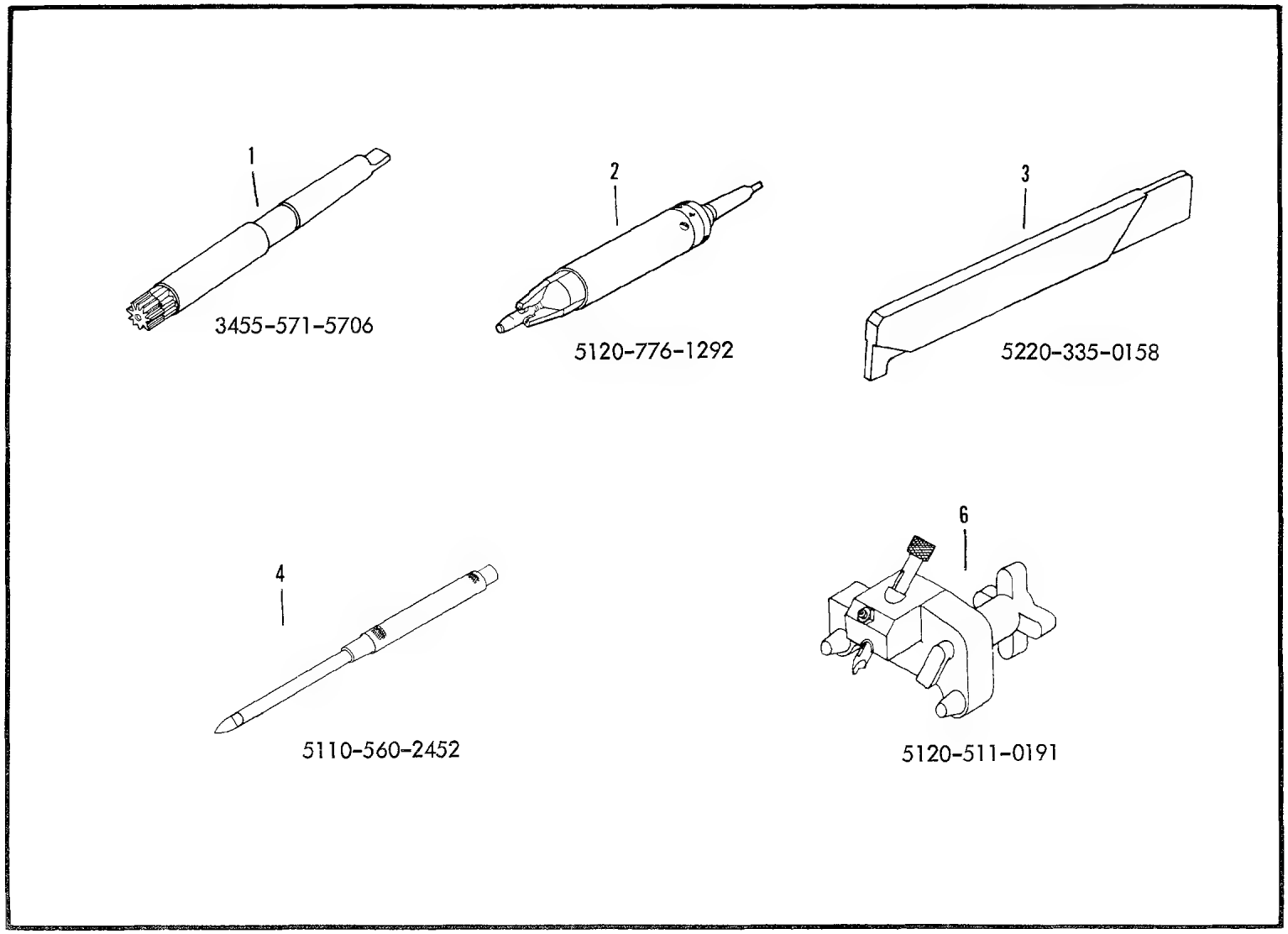

Figure E78. Engine Tools

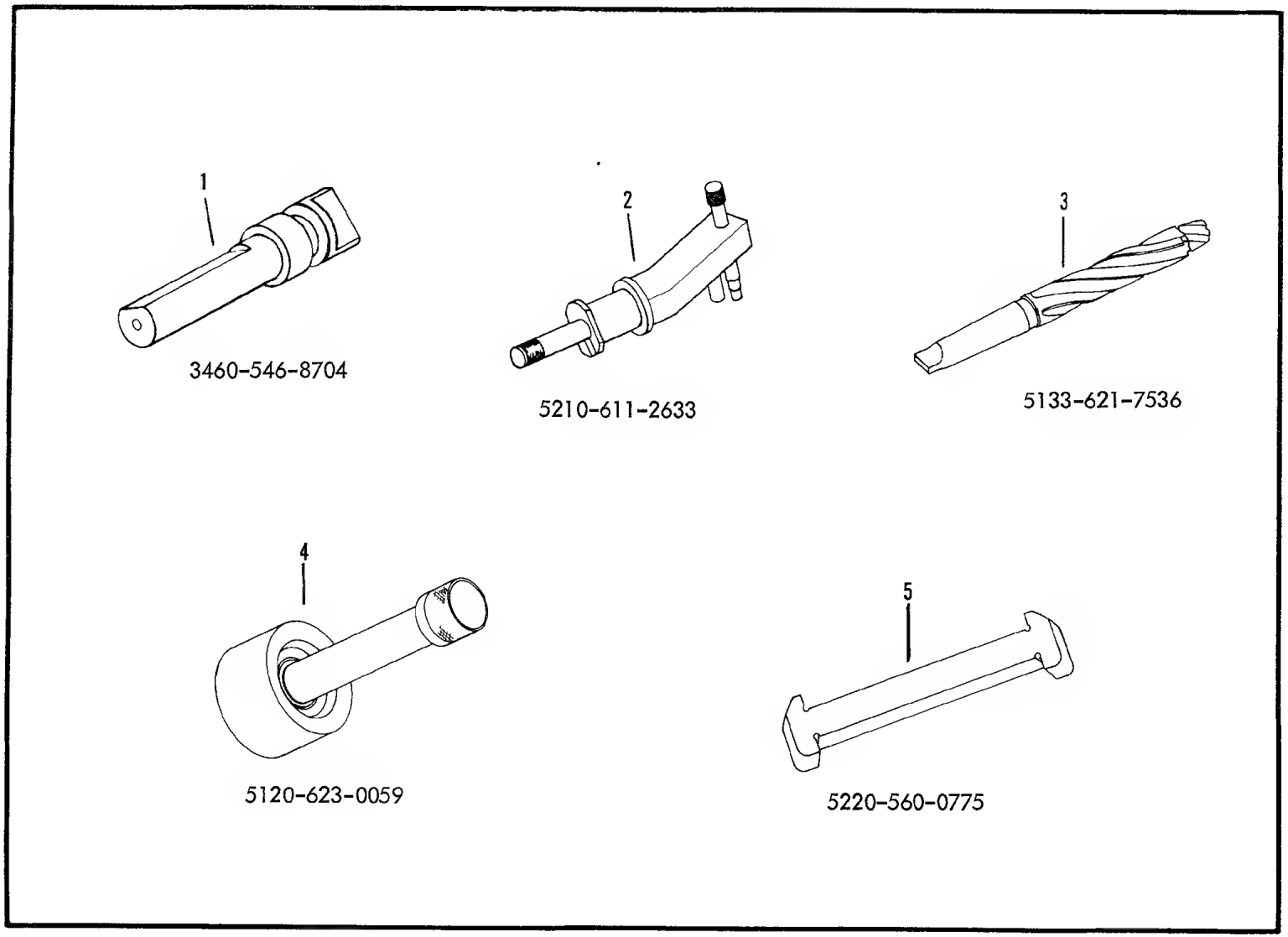

Figure E79. Engine Tools

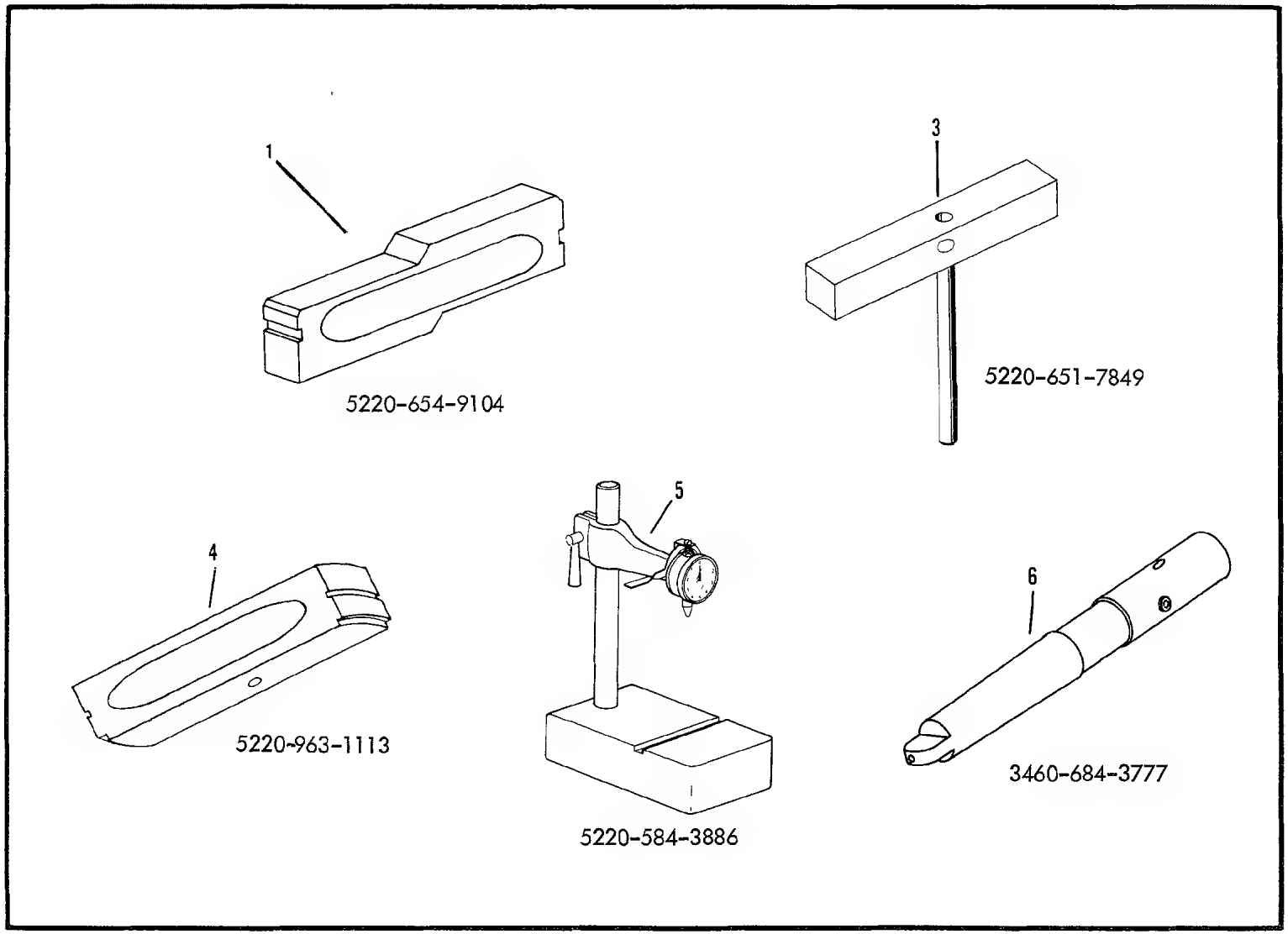

Figure E80. Engine Tools

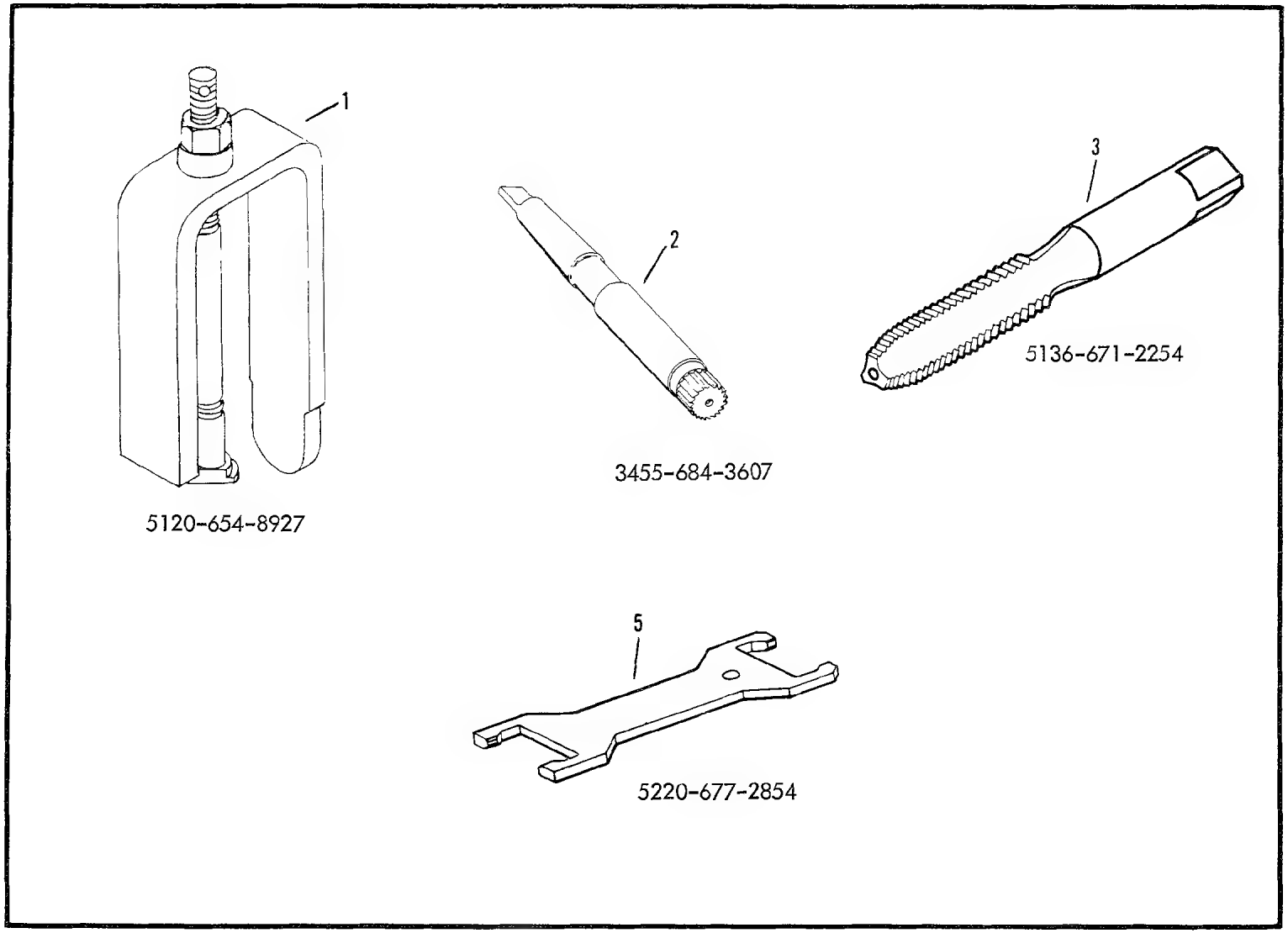

Figure E 81. Engine Tools

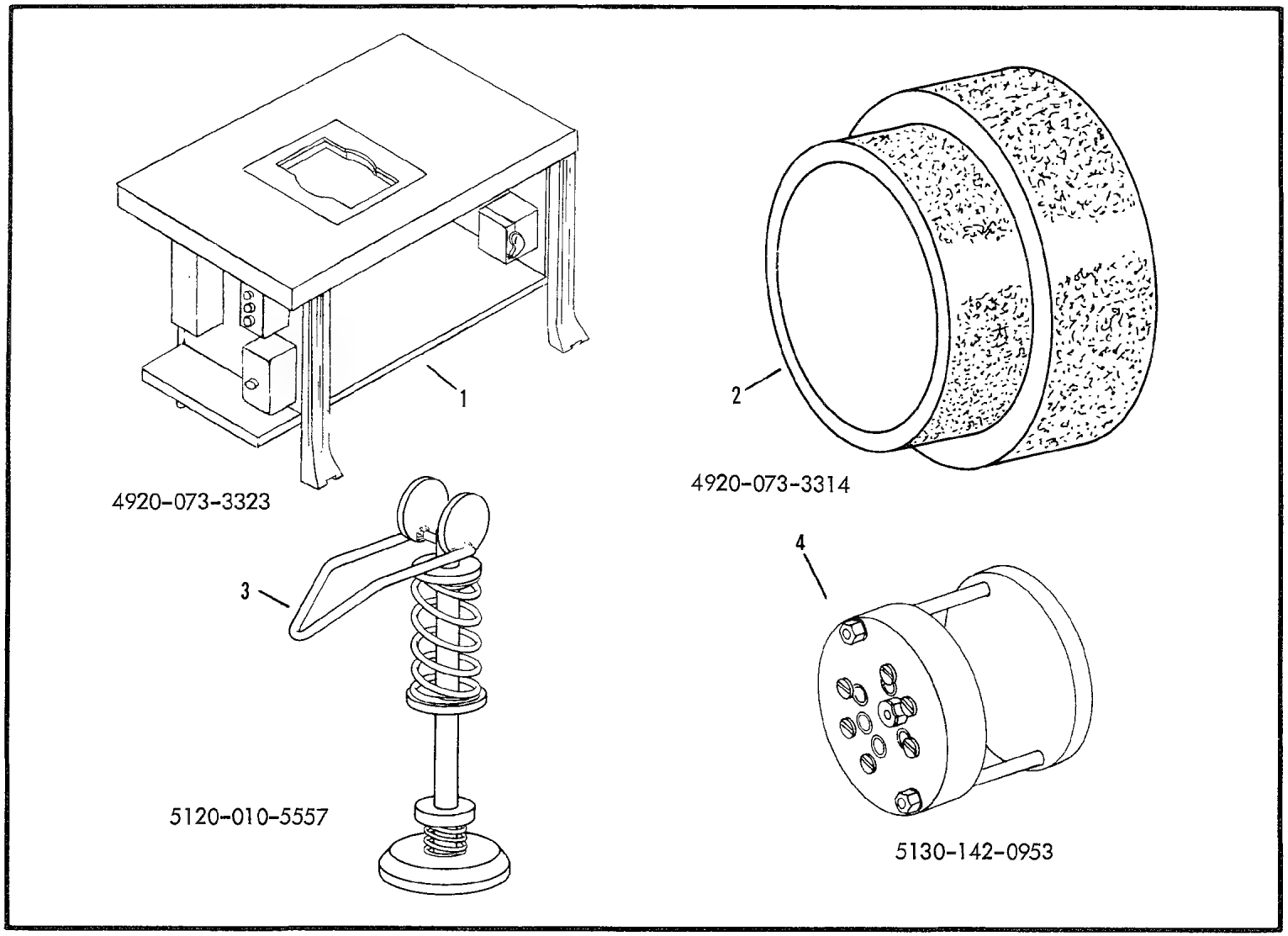

Figure E82. Engine Tools

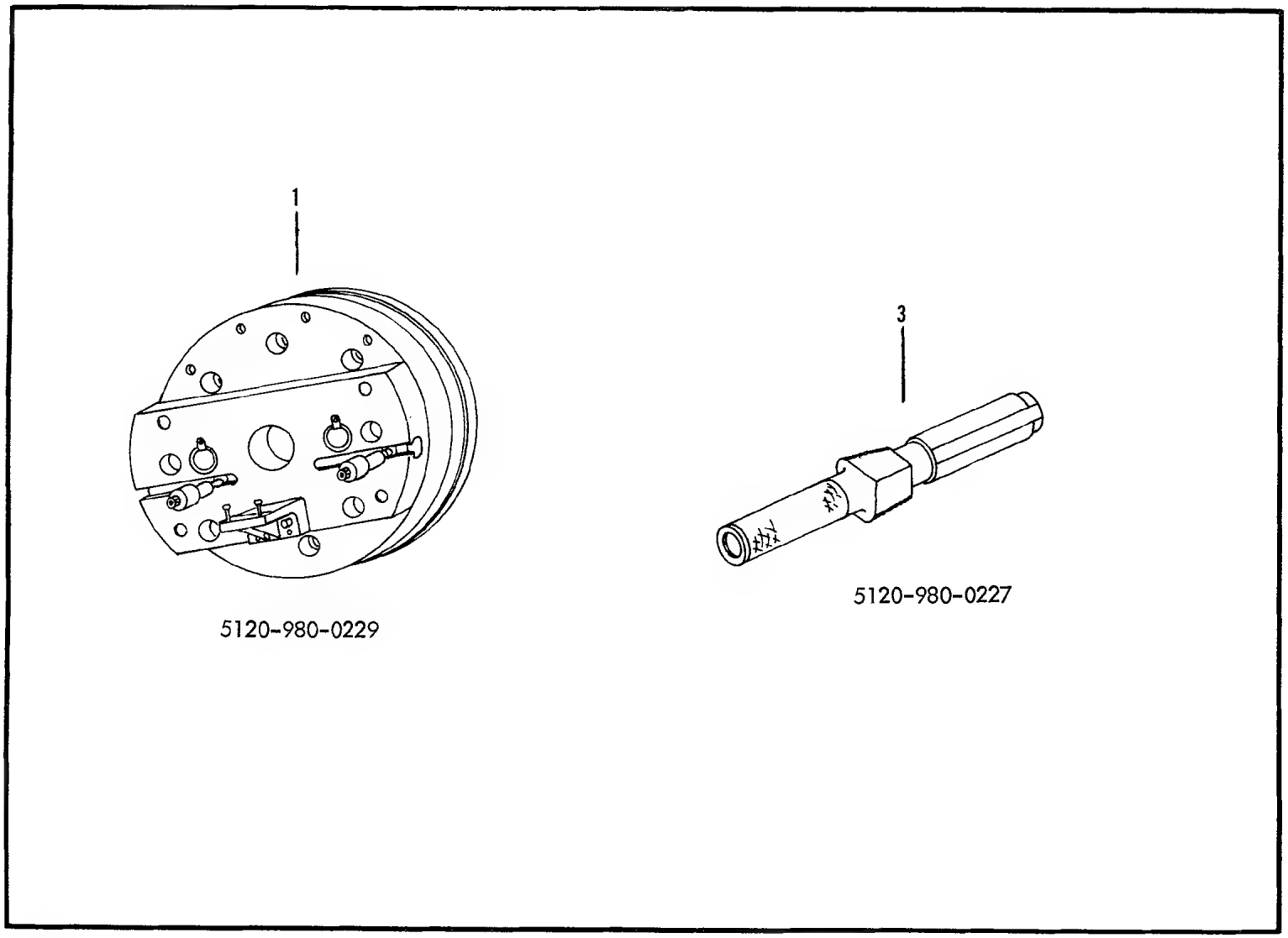

Figure E83. Engine Tools

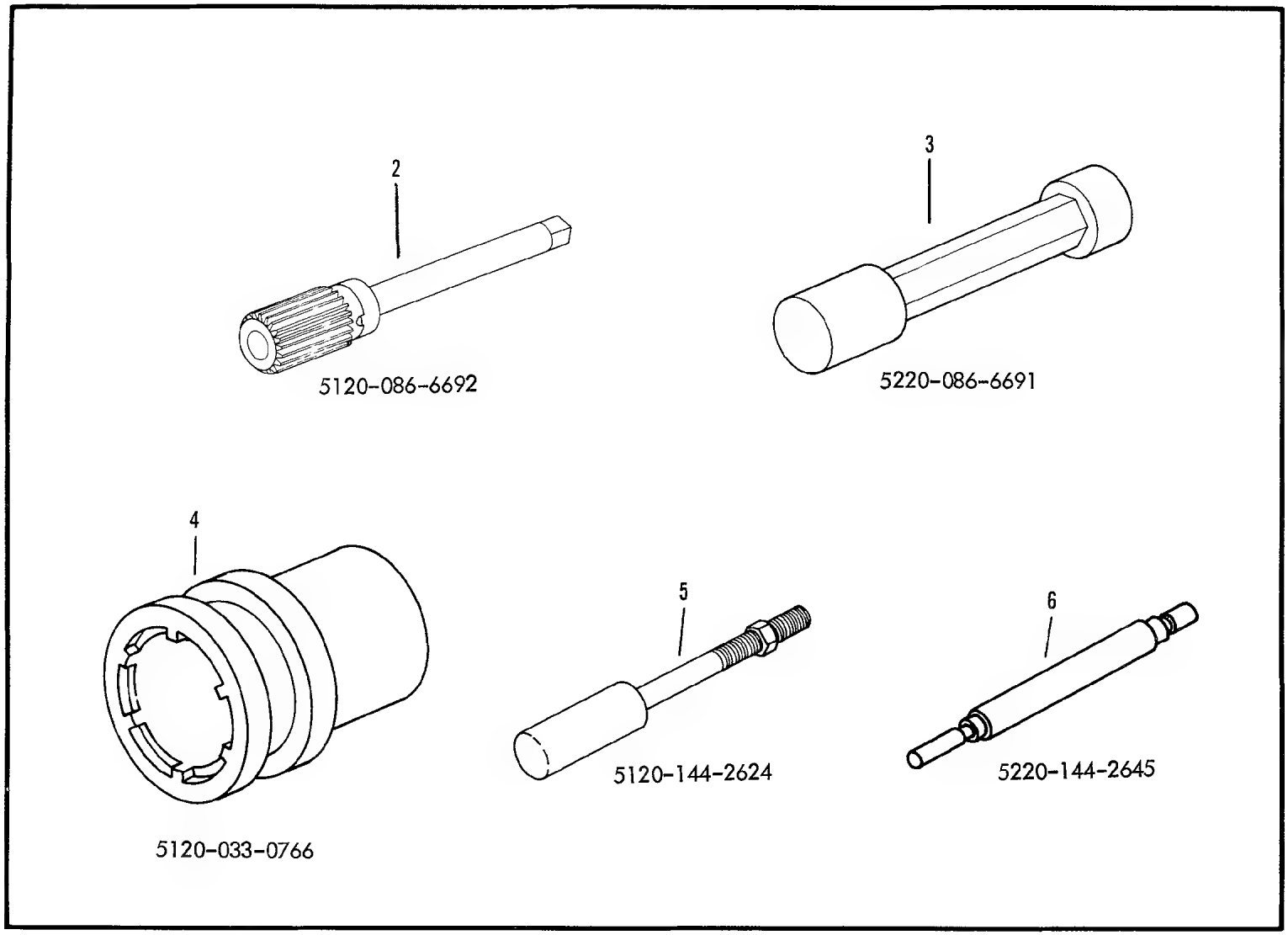

Figure E84. Engine Tools

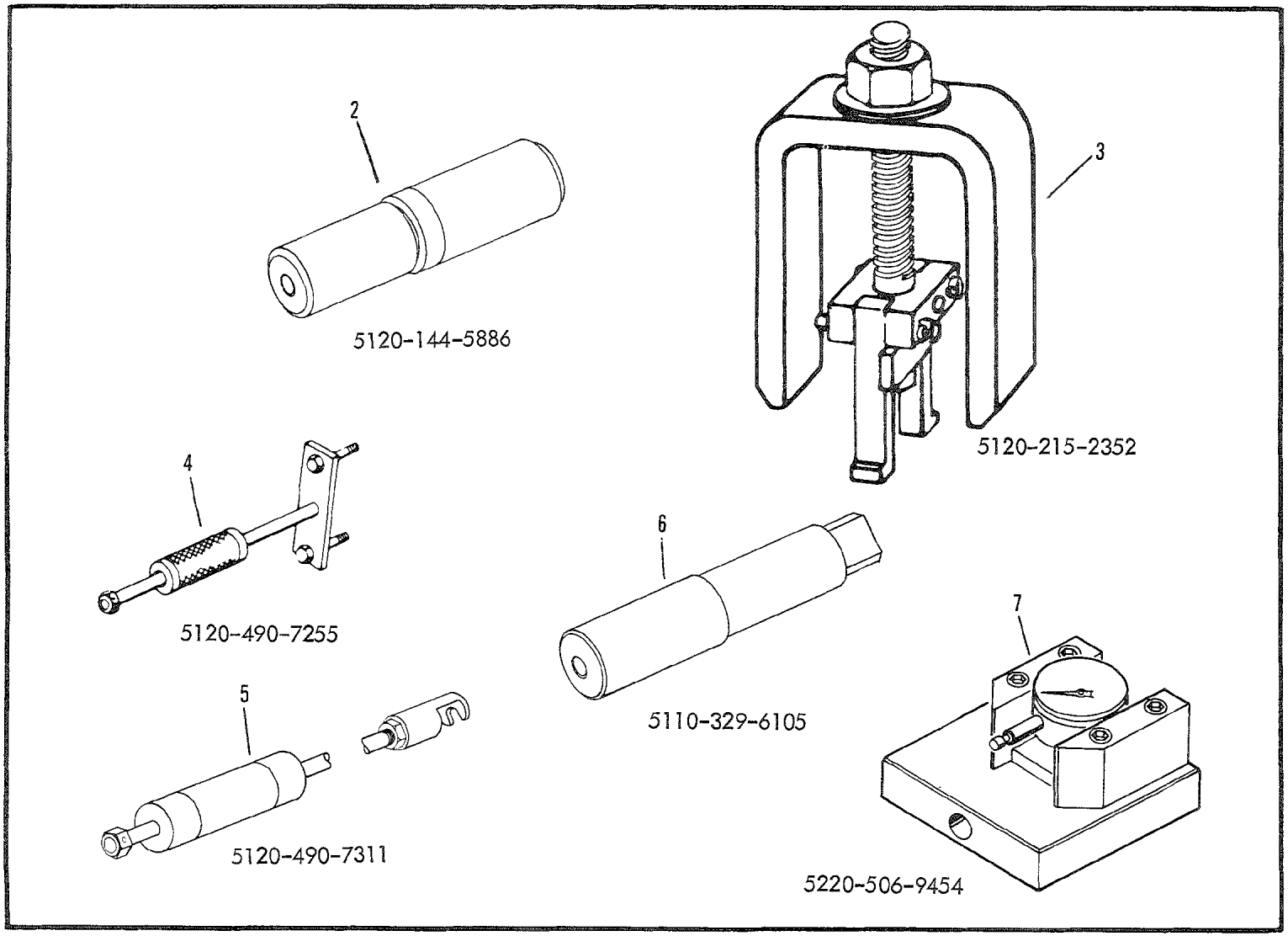

Figure E85. Engine Tools

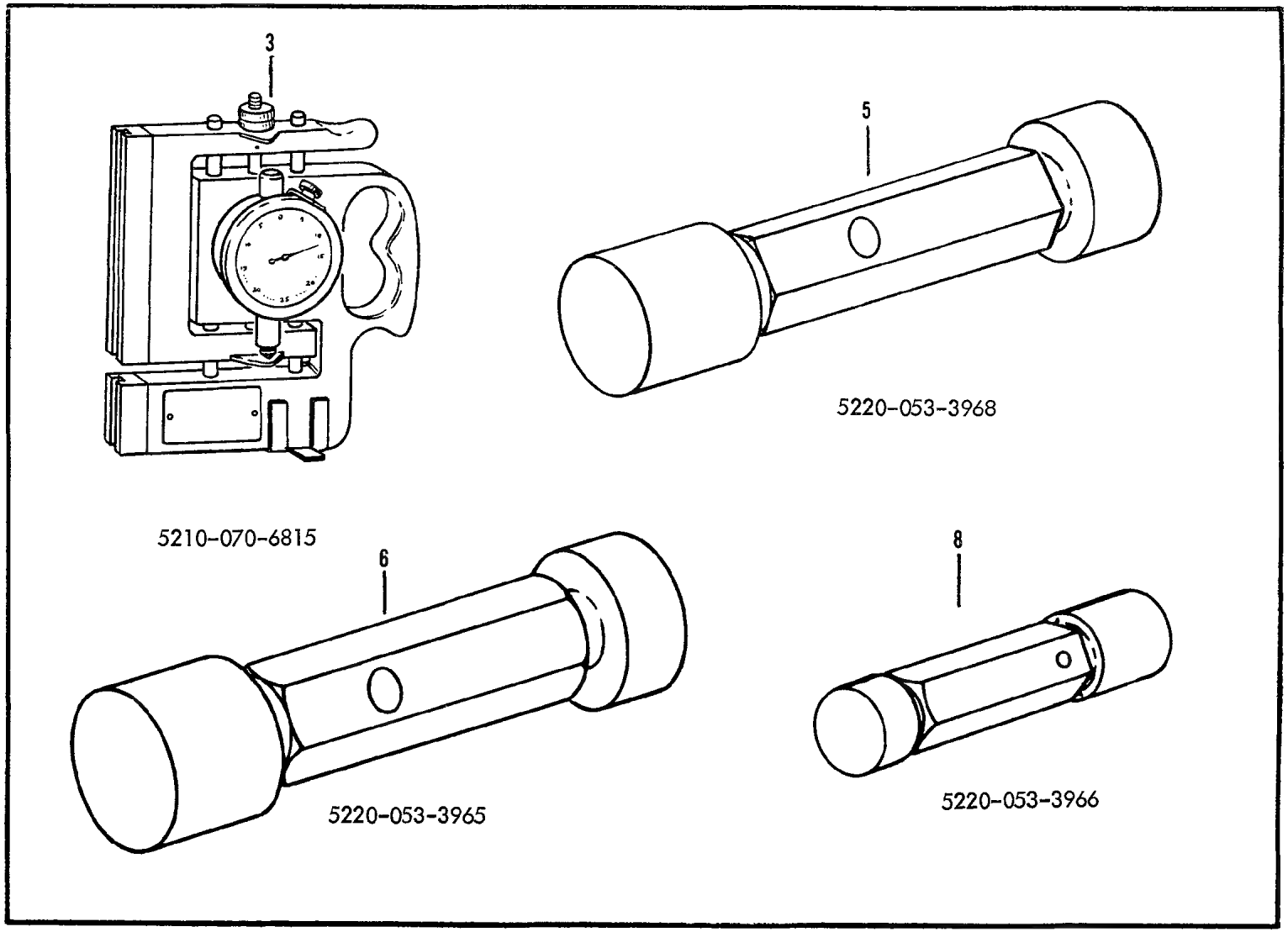

Figure E86. Engine Tools

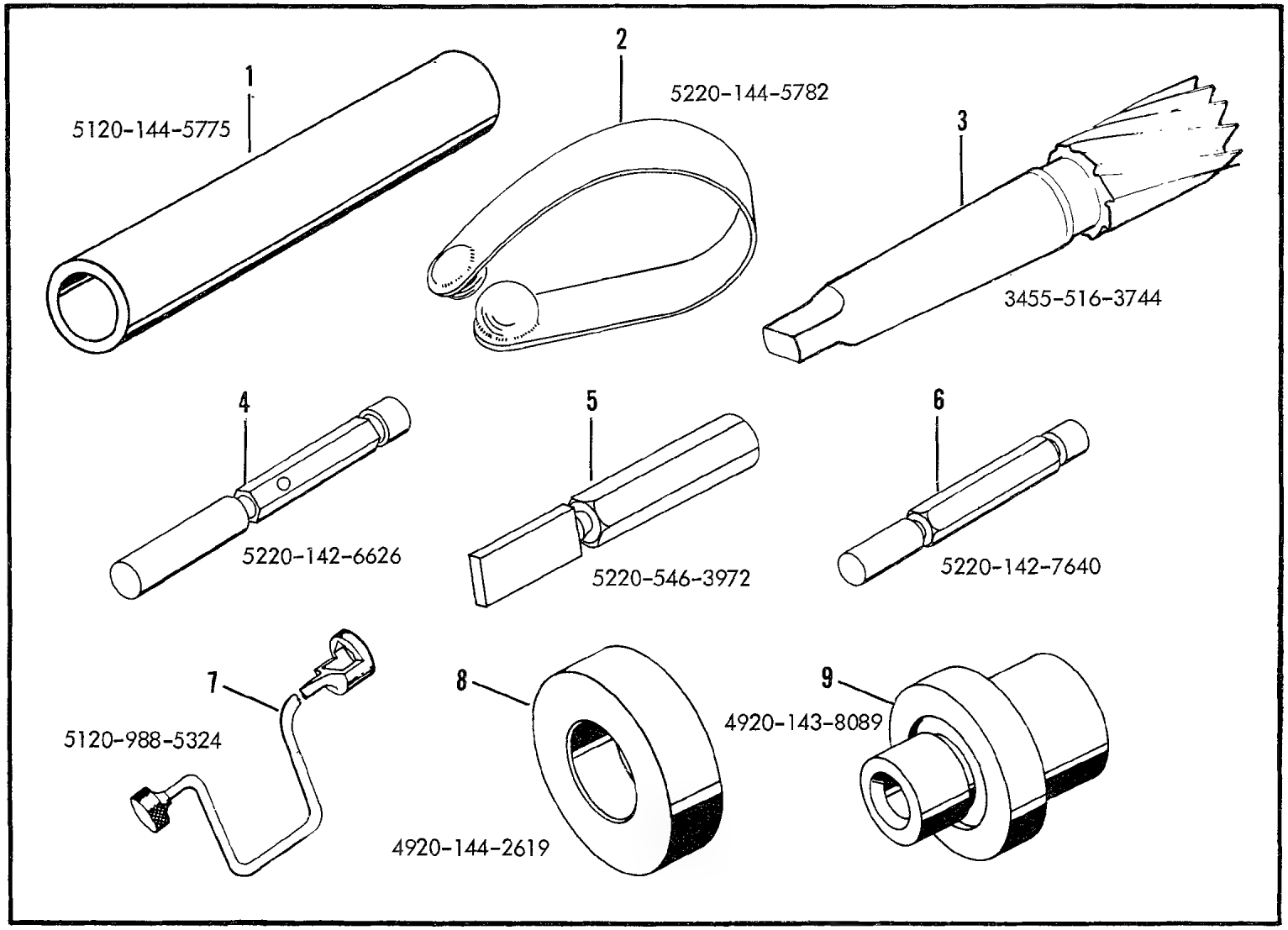

Figure E87. Engine Tools

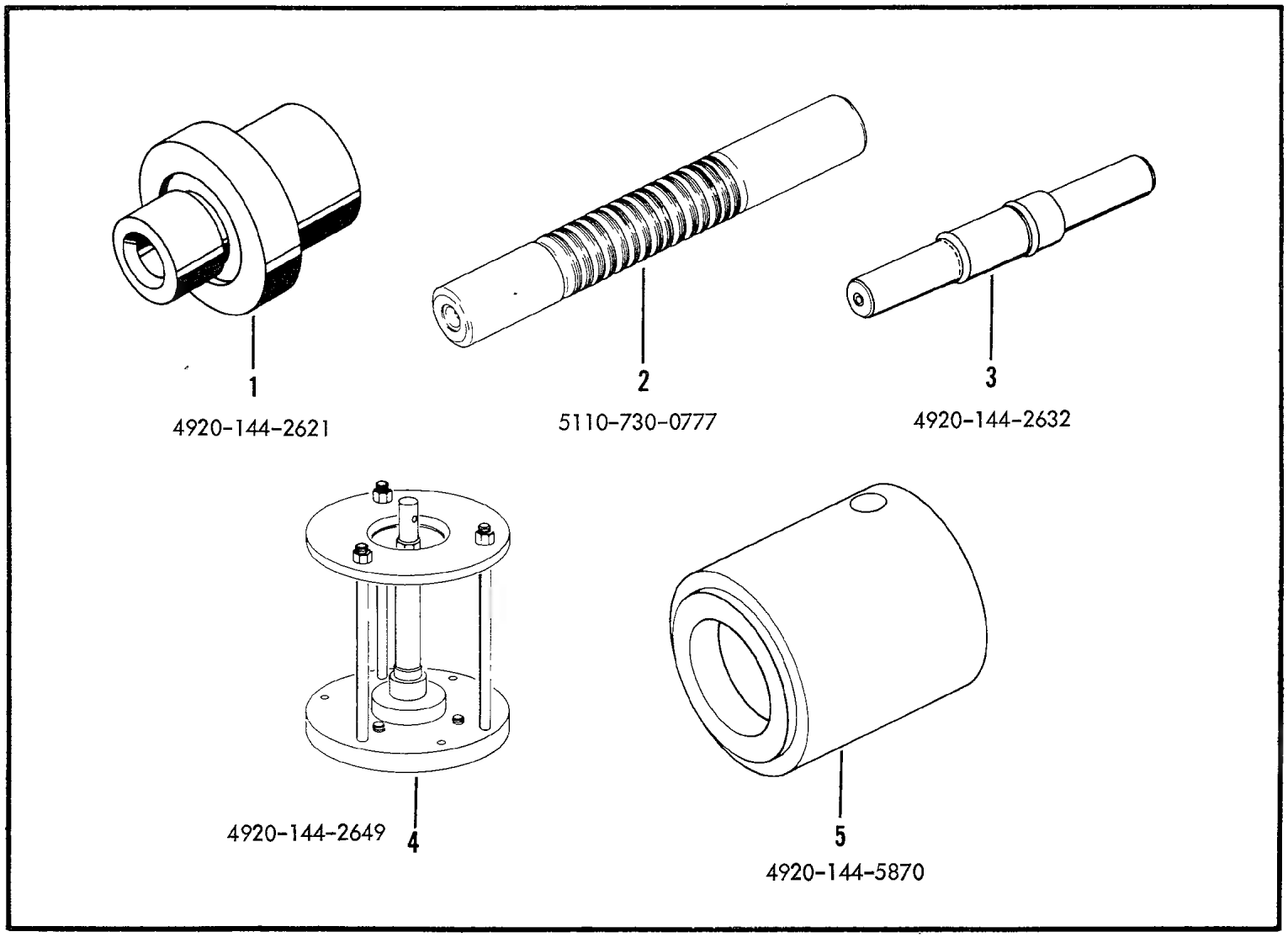

Figure E88. Engine Tools

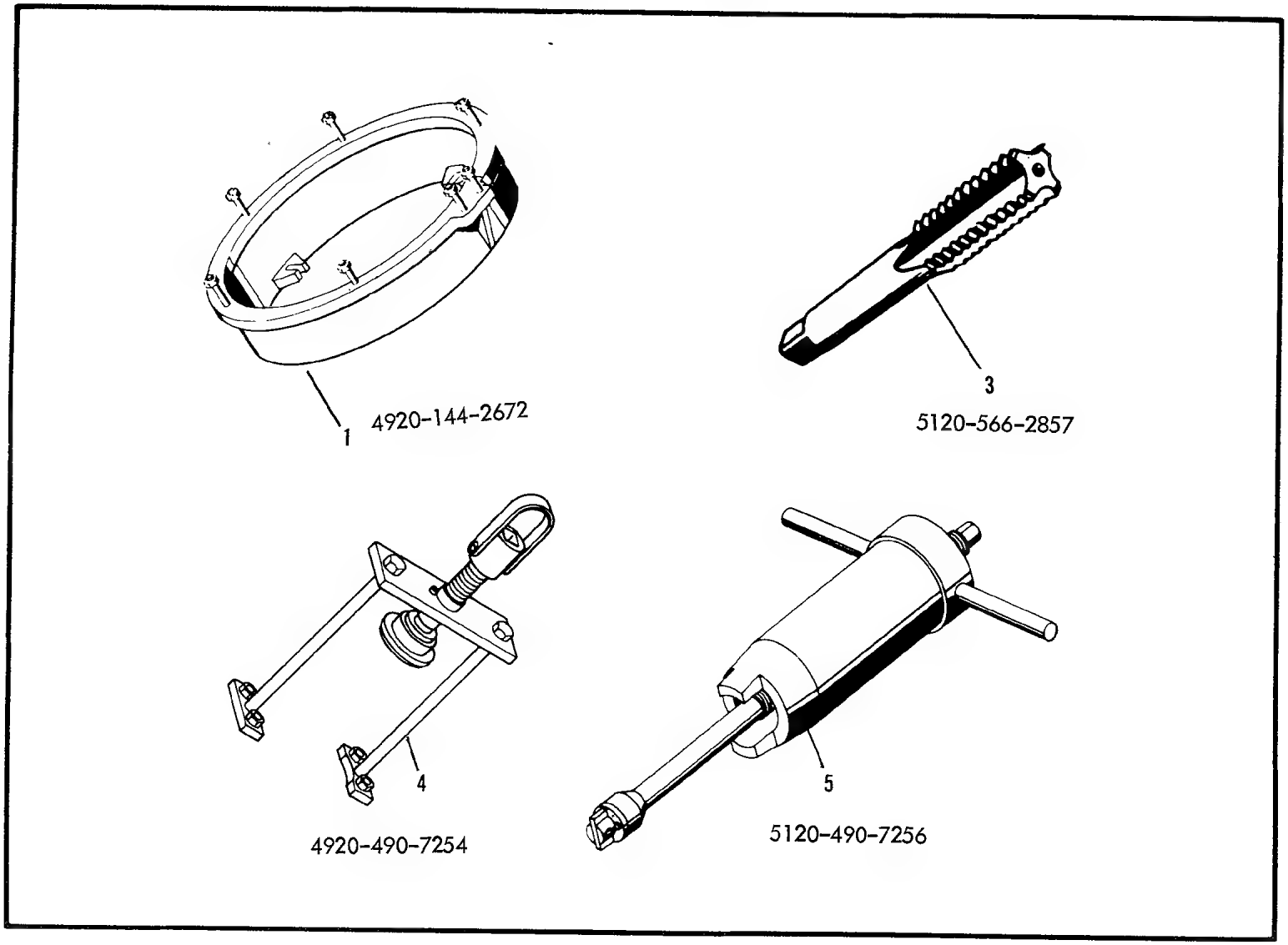

Figure E89. Engine Tools

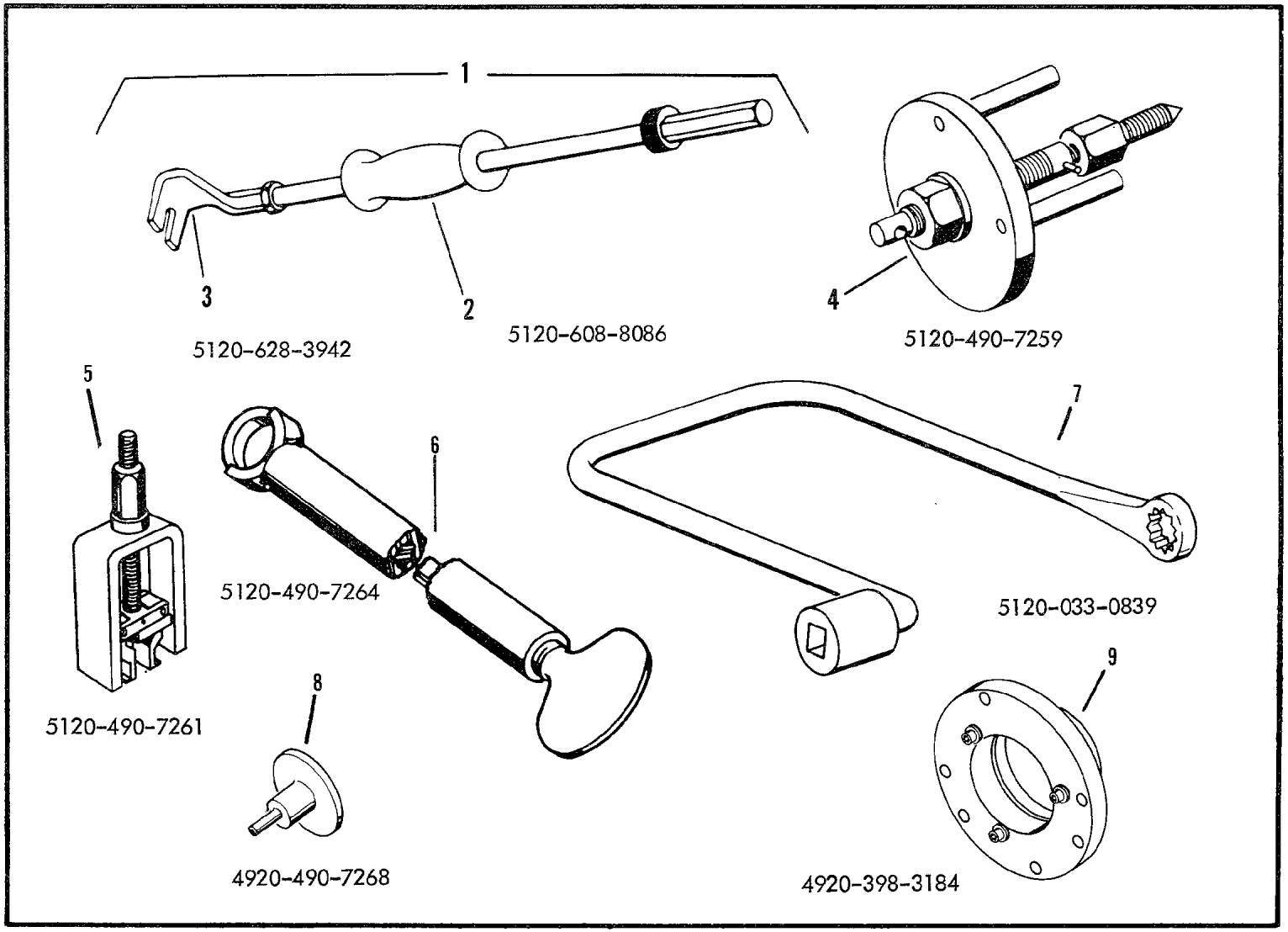

Figure E90. Engine Tools

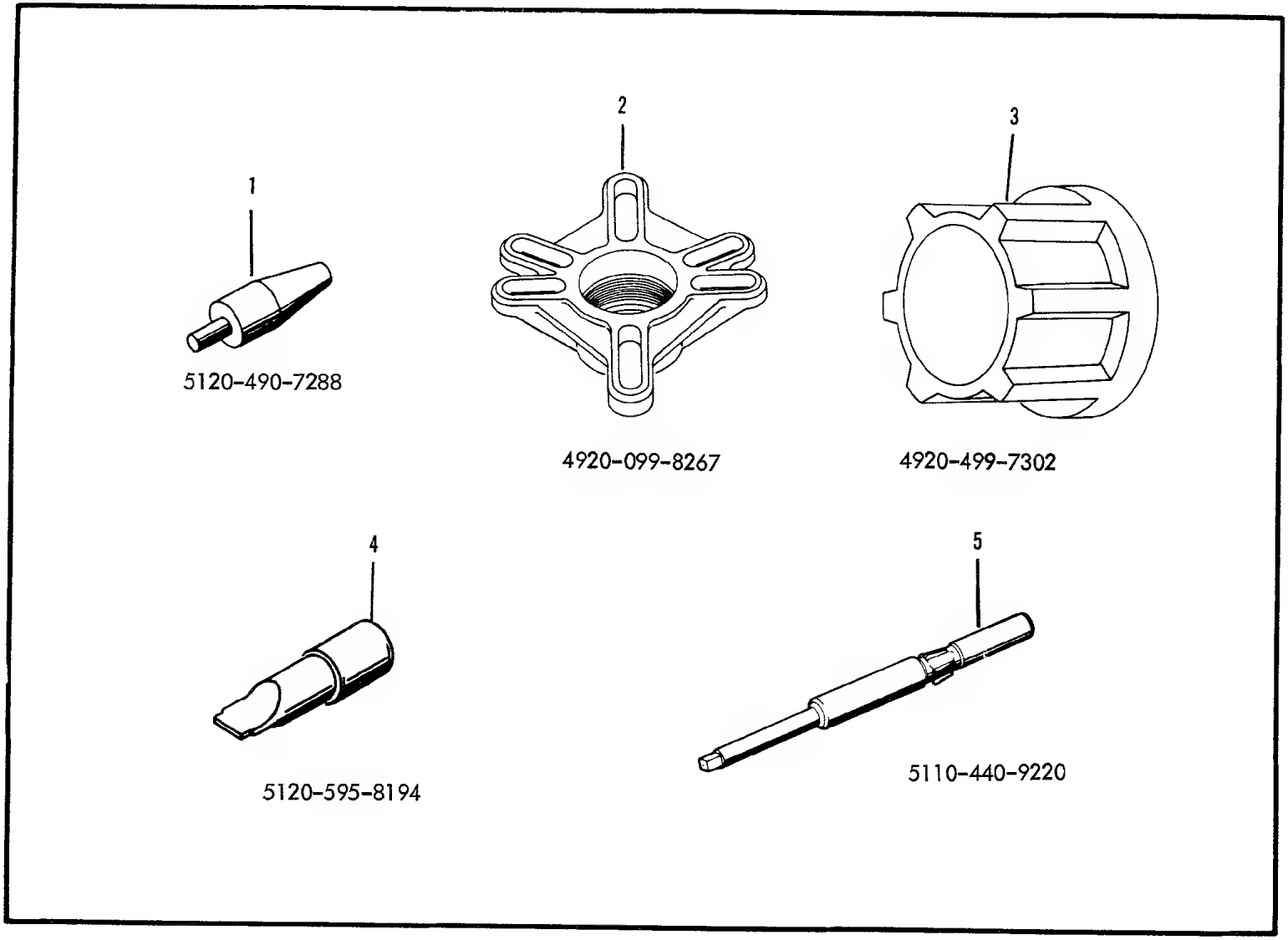

Figure E91. Engine Tools

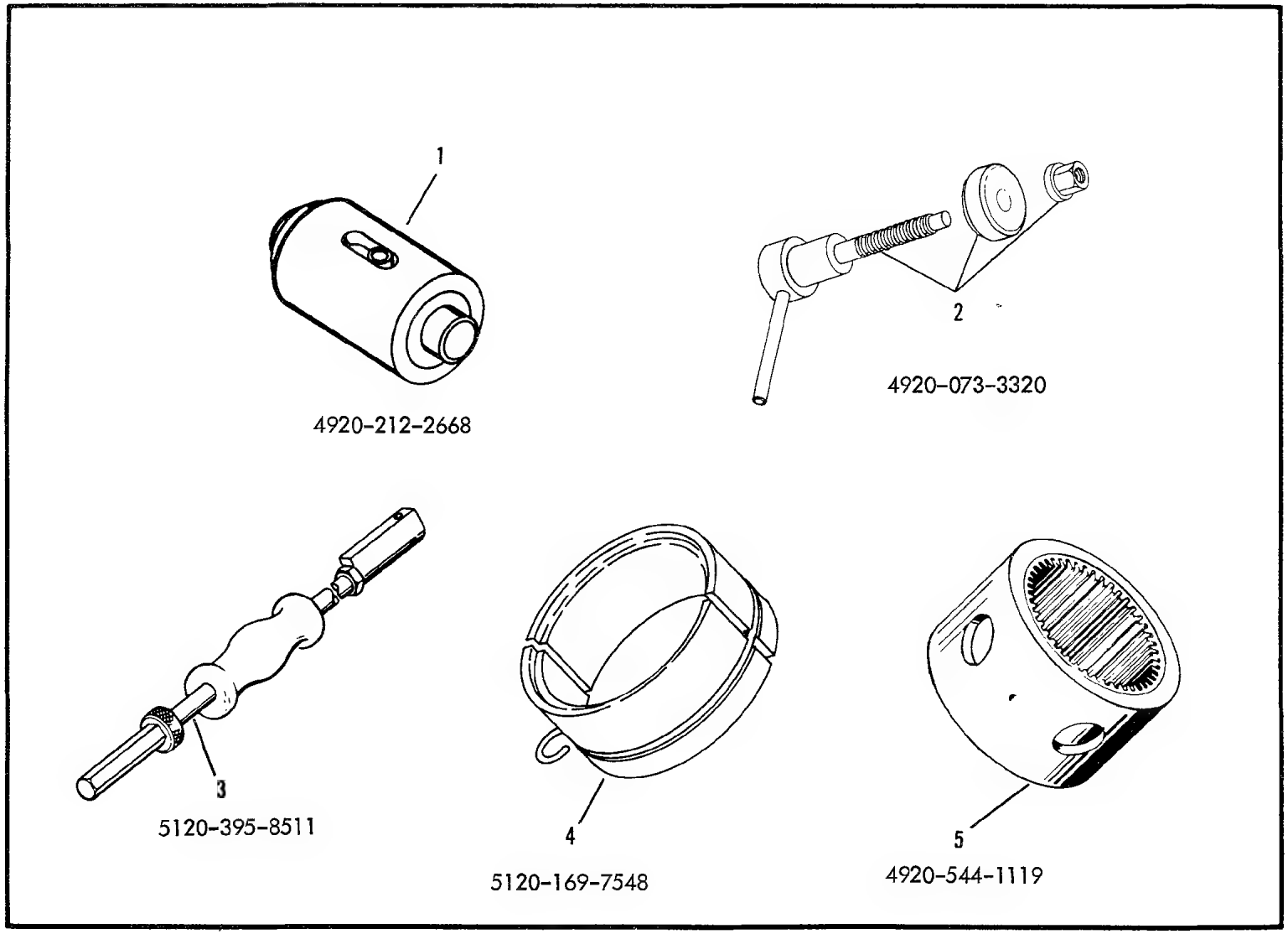

Figure E92. Engine Tools

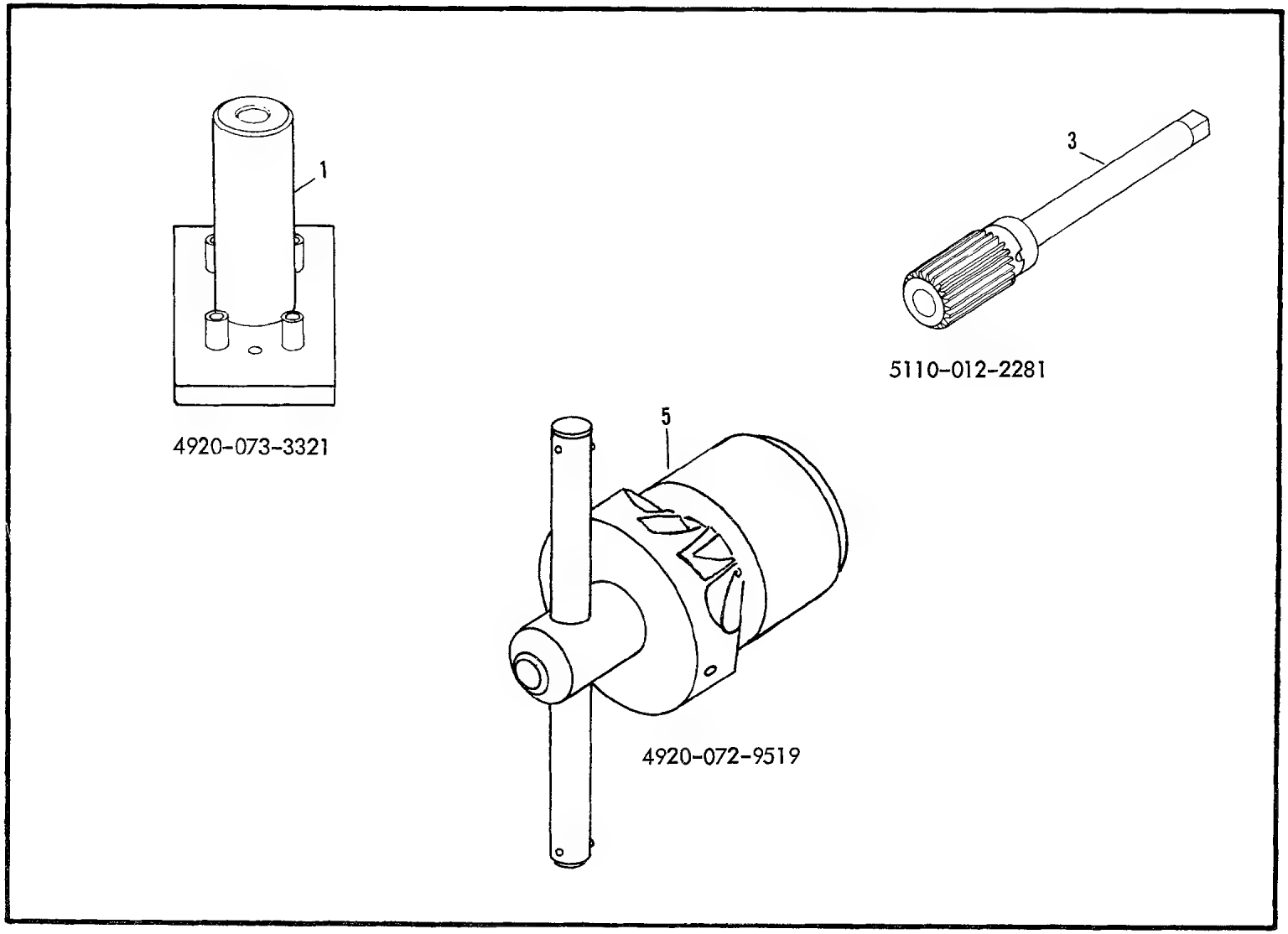

Figure E93. Engine Tools

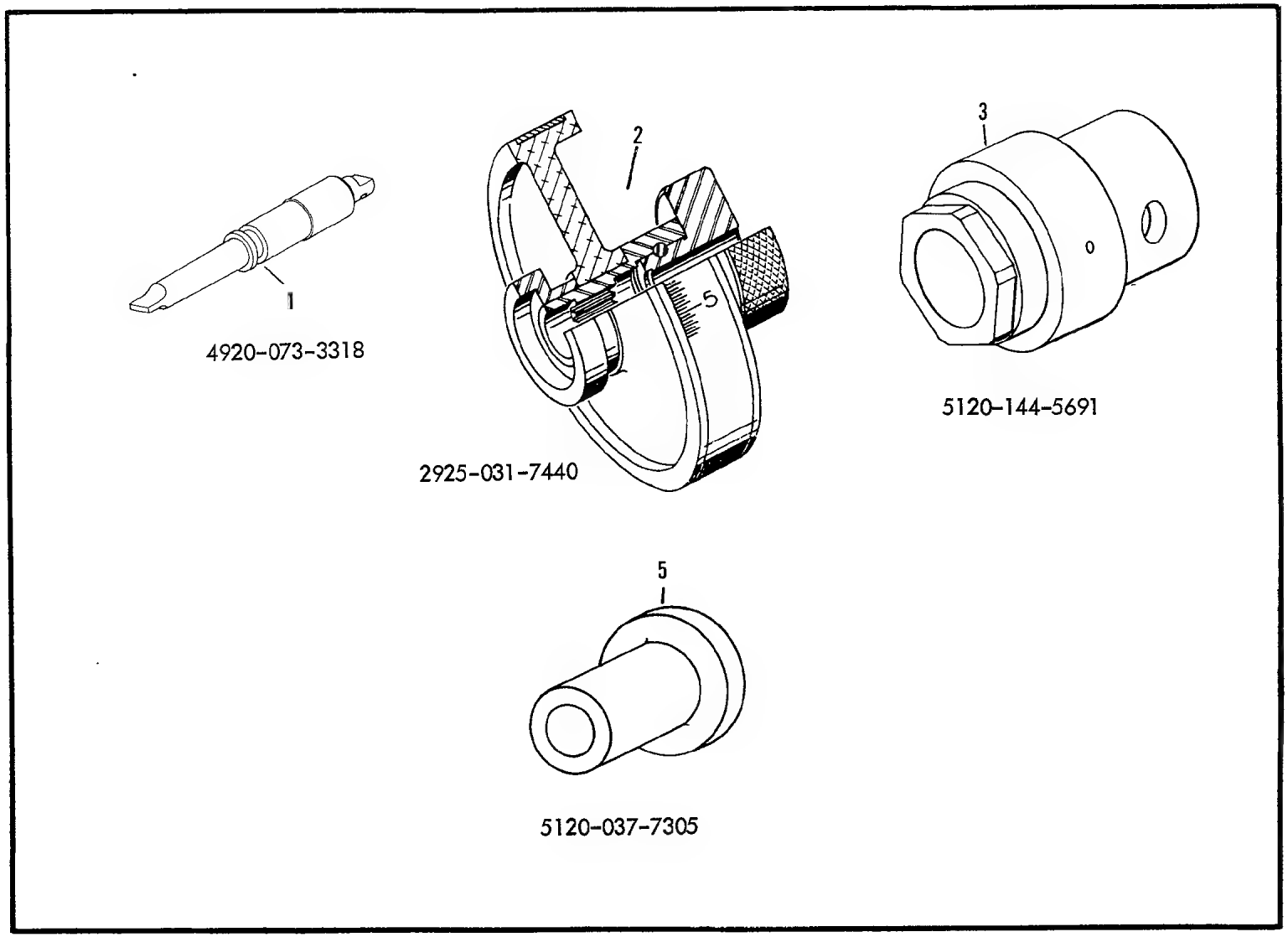

Figure E94. Engine Tools

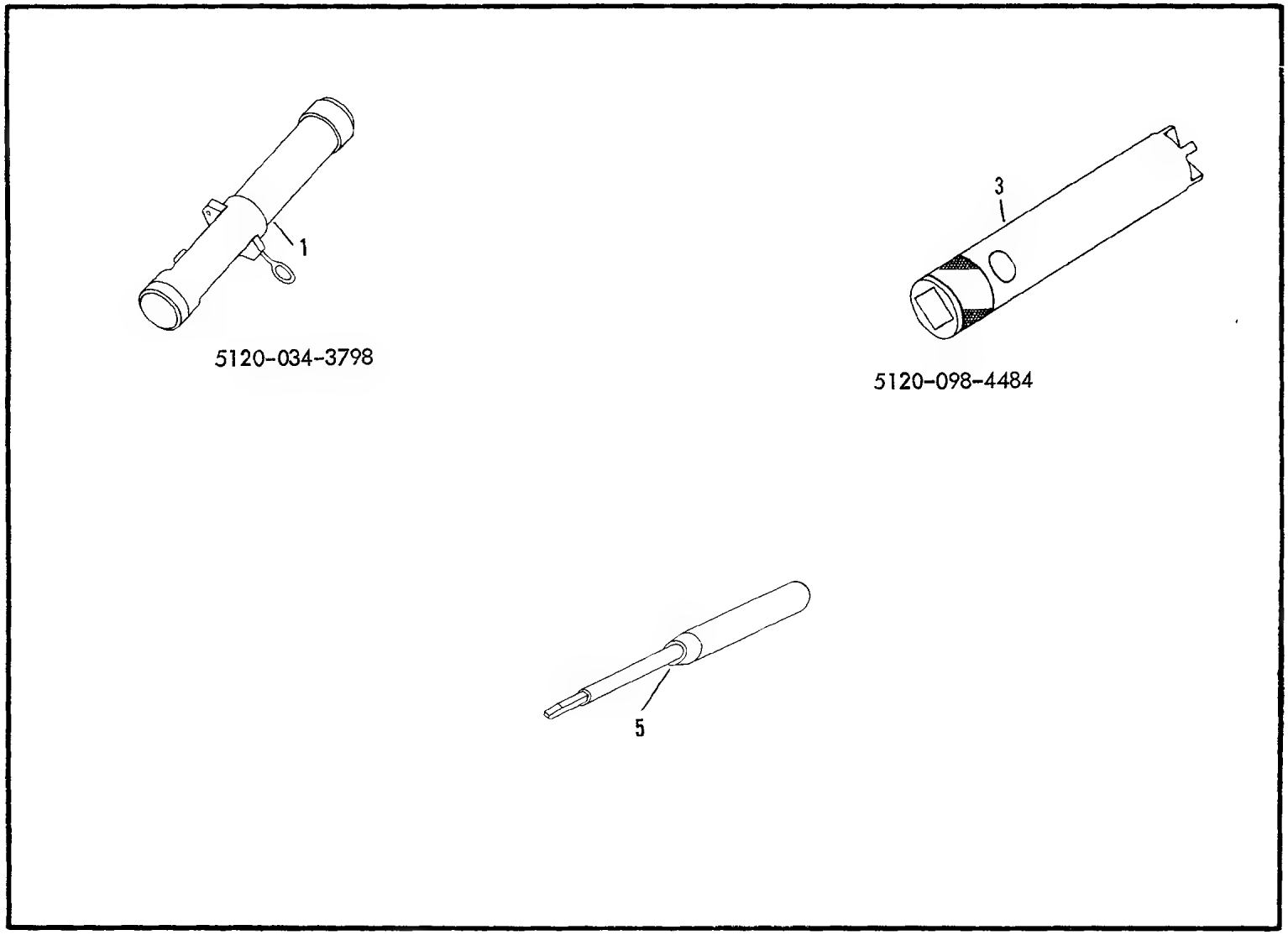

Figure E95. Engine Tools

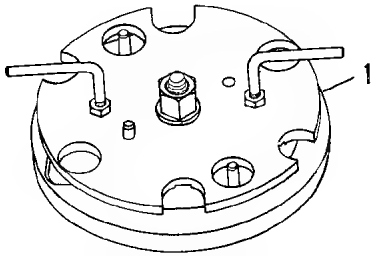

4920-306-5172

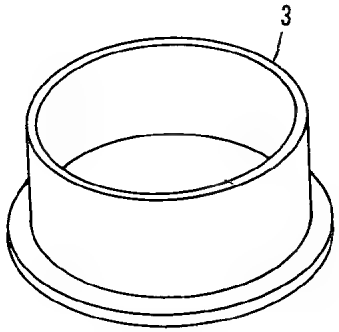

5120-144-5903

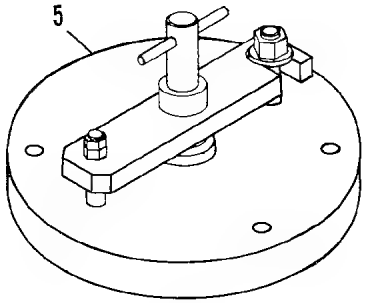

4920-073-3319

Figure E96. Engine Tools

1454

SECTION III

FUNCTIONAL GROUP 40

PART 3
GROUND SUPPORT AND FLYAWAY EQUIPMENT

(1) SOURCE, MAINT AND REC CODE (a) SOURCE CODE	(b) MAINT LEVEL	(c) REC CODE	(2) FEDERAL STOCK NUMBER	REFERENCE NUMBER		(3) DESCRIPTION	MODELS USABLE ON CH-34C	(4) UNIT OF ISSUE	(5) QTY INC IN UNIT PACK	(6) QTY INC IN UNIT	(7) 30-DAY DS/GS MAINT ALW (a) 1-20	(b) 21-50	(c) 51-100	(8) 1-YR ALW PER 100 EQUIP CNTGCY	(9) DEPOT MAINT ALW PER 100 EQUIP	(10) ILLUSTRATION (a) FIG NO	(b) ITEM NO
P	O		1560-623-5851	S1670-10051-1	<78286>	BLADE ROTATOR-MAIN ROTOR..... SPAR & POCKET		EA		2	*	*	*		*	F1	12
P	O		1560-629-1595	S1670-10503-4	<78286>	COVER ASSEMBLY,EXHAUST..... PORT,TOP		EA		1	2	2	3		*	F3	6
P	O		1730-099-3244	S1670-10013	<78286>	RACK,ROTARY WING BLADES.....		EA		1	*	*	*		*	F1	11
MF	O			42D6594-2	<80049>	CHOCK,WHEEL-WOOD,..... ADJUSTABLE,32 IN.MAX LG,6 IN.W,4 IN.H		EA		1						F2	6
P	O		1730-300-2096	S1670-10491-2	<78286>	COVER,AIR EXIT,ENGINE..... COMPARTMENT		EA		1	*	*	*		*	F2	2
P	O		1730-300-2107	S1670-10494-2	<78286>	COVER,MAIN ROTOR HUB.....		EA		1	*	*	*		*	F2	5
P	O		1730-300-2123	S1670-10498-2	<78286>	COVER,TRANSMISSION SCREEN.... MAIN		EA		1	*	*	*		*	F3	4
P	O		1730-300-9444	S1670-10504-2	<78286>	COVER,GRILL,NOSE DOOR AIR.... EXIT		EA		1	*	*	*		*	F4	1
P	O		1730-300-9445	S1670-10492-2	<78286>	COVER,PITOT TUBE.....		EA		1	*	*	*		*	F2	3
P	O		1730-300-9446	S1670-10510-2	<78286>	COVER,PYLON,LOWER.....		EA		1	*	*	*		*	F4	6
P	O		1730-300-9447	S1670-10495-2	<78286>	COVER,TAIL ROTOR BLADE.....		EA		4	*	*	*		*	F3	1
P	O		1730-300-9448	S1670-10496-2	<78286>	COVER,TRANSMISSION OIL COOLER		EA		1	*	*	*		*	F3	2
P	O		1730-300-9449	S1670-10497-2	<78286>	COVER,WINDSHIELD.....		EA		1	*	*	*		*	F3	3
P	O		1730-491-0330	AN8015-2	<88044>	TIE DOWN KIT,AIRCRAFT..... MOORING CONSIST OF		EA		1	*	*	*		*	F1	1
P	O		4020-298-3394	33D2721-1	<80094>	.FIBER ROPE ASSEMBLY,SLING... MANILA,MILDEW PREVENTATIVE TREATED,1/2 IN.DIA,15 FT LG,FED T-F-601A		EA		15	1	1	1		*	F1	2
P	O		4030-641-0321	36A4467	<81352>	.ANCHOR GUY.....		EA		30	*	*	*		*	F1	3
P	O		1730-492-3017	36A4468	(80049)	.ROD,AIRCRAFT MOORING ANCHOR.		EA		15	*	*	*		*	F1	4
P	O		1730-492-3018	36A4469	<80049>	.EYE ASSEMBLY,AIRCRAFT..... MOORING		EA		15	*	*	*		*	F1	5
P	O		1730-243-9064	36B4466	<81352>	.ANCHOR GUY.....		EA		1	*	*	*		*	F1	6
P	O		1730-492-3134	38B3323	<80049>	.PIN,AIRCRAFT MOORING.....		EA		1	1	1	1		*	F1	7
P	O		1730-492-3519	43D22262	<80049>	.SPOILER ASSEMBLY,AIRCRAFT... MOORING		AY		8	*	*	*		*	F1	8
P	O		1730-492-3605	44G5478	<80049>	.CASE ASSEMBLY,CANVAS,OLIVE.. DRAB		EA		1	1	1	1		*	F1	9
P	O		1730-587-4027	S1670-10508-2	<78286>	COVER ASSEMBLY,FURNISHINGS... TAIL ROTOR HUB, W/COUNTERWEIGHTS		EA		1	*	*	*		*	F4	5
P	O		1730-613-1037	S1670-10499-20	<78286>	COVER ASSEMBLY,TAIL ROTOR.... GEAR BOX-UPPER		EA		1	1	1	1		*	F3	5
P	O	R	1730-623-5920	S1670-10481-25	<78286>	BLADE,STOWAGE ASSEMBLY.....		EA		2	*	*	*		*	F2	1
P	O		1730-633-0929	FDC1153M1	<76786>	.BUCKLE ASSEMBLY.....		EA		1	*	*	*		*	F2	
P	O		1730-633-0928	S1670-10481-9	<78286>	.LATCH ASSEMBLY,TOWING.....		EA		1	*	*	*		*	F2	
X2	O		1730-545-6163	S1670-10523	<78286>	.POCKET ASSEMBLY,BLADE..... STOWAGE		EA		4	*	*	*		*	F2	
P	O		1730-545-6164	S1670-10525	<78286>	..UNIVERSAL ASSEMBLY,BLADE... STOWAGE POCKET		EA		1	*	*	*		*	F2	
P	O		1560-772-1874	A5128L5-1-200	<86794>	..PIN,PIP.....		EA		1	*	*	*		3	F2	
P	O		1730-798-3752	1670-10526-17	<78286>	.TUBE ASSEMBLY RPLS--..... 1730-613-5429		EA		1	*	*	*		*	F2	
P	O		1730-633-1000	S1670-10633-13	<78286>	COVER ASSEMBLY-ENGINE AIR....		EA		1	*	*	*		*	F4	8

(1) SOURCE, MAINT AND REC CODE (a) SOURCE CODE	(b) MAINT LEVEL	(c) REC CODE	(2) FEDERAL STOCK NUMBER	(3) DESCRIPTION REFERENCE NUMBER			MODELS USABLE ON CH-34C	(4) UNIT OF ISSUE	(5) QTY INC IN UNIT PACK	(6) QTY INC IN UNIT	(7) 30-DAY DS/GS MAINT ALW (a) 1-20	(b) 21-50	(c) 51-100	(8) 1-YR ALW PER 100 EQUIP CNTGCY	(9) DEPOT MAINT ALW PER 100 EQUIP	(10) ILLUSTRATION (a) FIG NO	(b) ITEM NO
						CONTINUED										F4	8
						EXIT											
P	O		1730-633-1001	S1670-10632-7	<78286>	COVER ASSEMBLY,ENGINE EXHAUST		EA		1	1	1	1		*	F4	7
P	O		1730-633-1002	S1670-10493-14	<78286>	COVER ASSEMBLY,MAIN ROTOR....		EA		4	*	*	*		*	F2	4
						BLADE RPLS-- 1730-300-2106											
P	F		1730-794-4910	S1670-10526-15	<77272>	TUBE ASSEMBLY,BLADE STOWAGE..		EA		1	*	*	*			F2	
P	O		5120-626-5122	S1570-10338-11	<78286>	PULLER,TAPERED PIN-MAIN.....		EA		1	1	1	1		*	F1	10
						ROTOR BLADE CUFFS											
AO	O			S1670-10506-14	<78286>	TIP SOCK ASSEMBLY-UNFOLDED...		EA		1	*	*	*		*	F4	2
						BLADES											
P	O		5340-631-3881	S1570-21654	<78286>	.FORK,BLADE-ASSIST POLE.....		EA		1	*	*	*		*	F4	3
P	O		1730-712-1390	S1670-10506-16	<78286>	.COVER ASSEMBLY.....		EA		4	*	*	*		*	F4	
P	O		1730-606-0193	S1670-10506-4	<78286>	.POLE,ASSIST-UNFOLDED.....		EA		1	*	*	*		*	F4	4
						BLADES TIP SOCK											

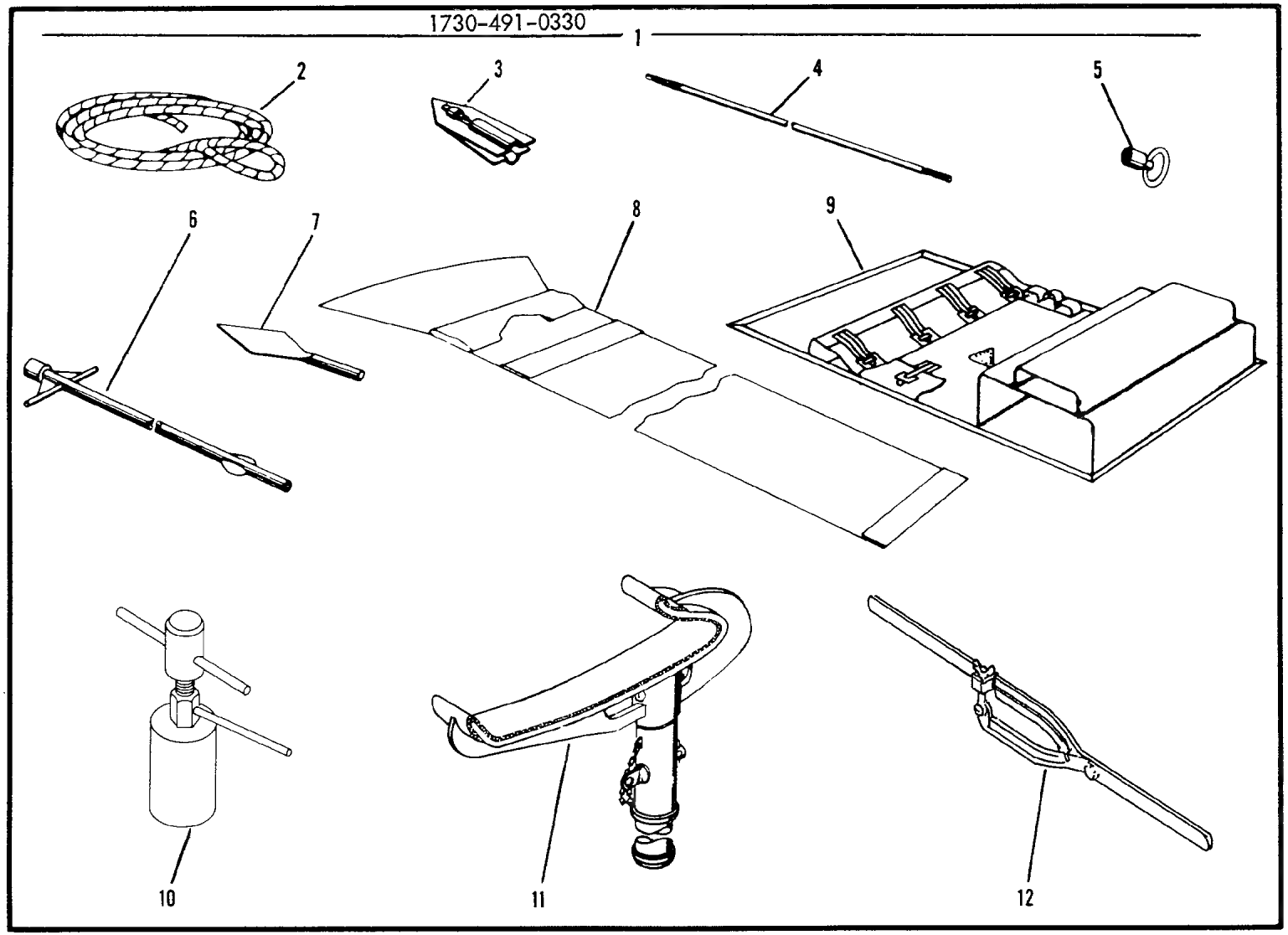

Figure F1. Flyaway Items

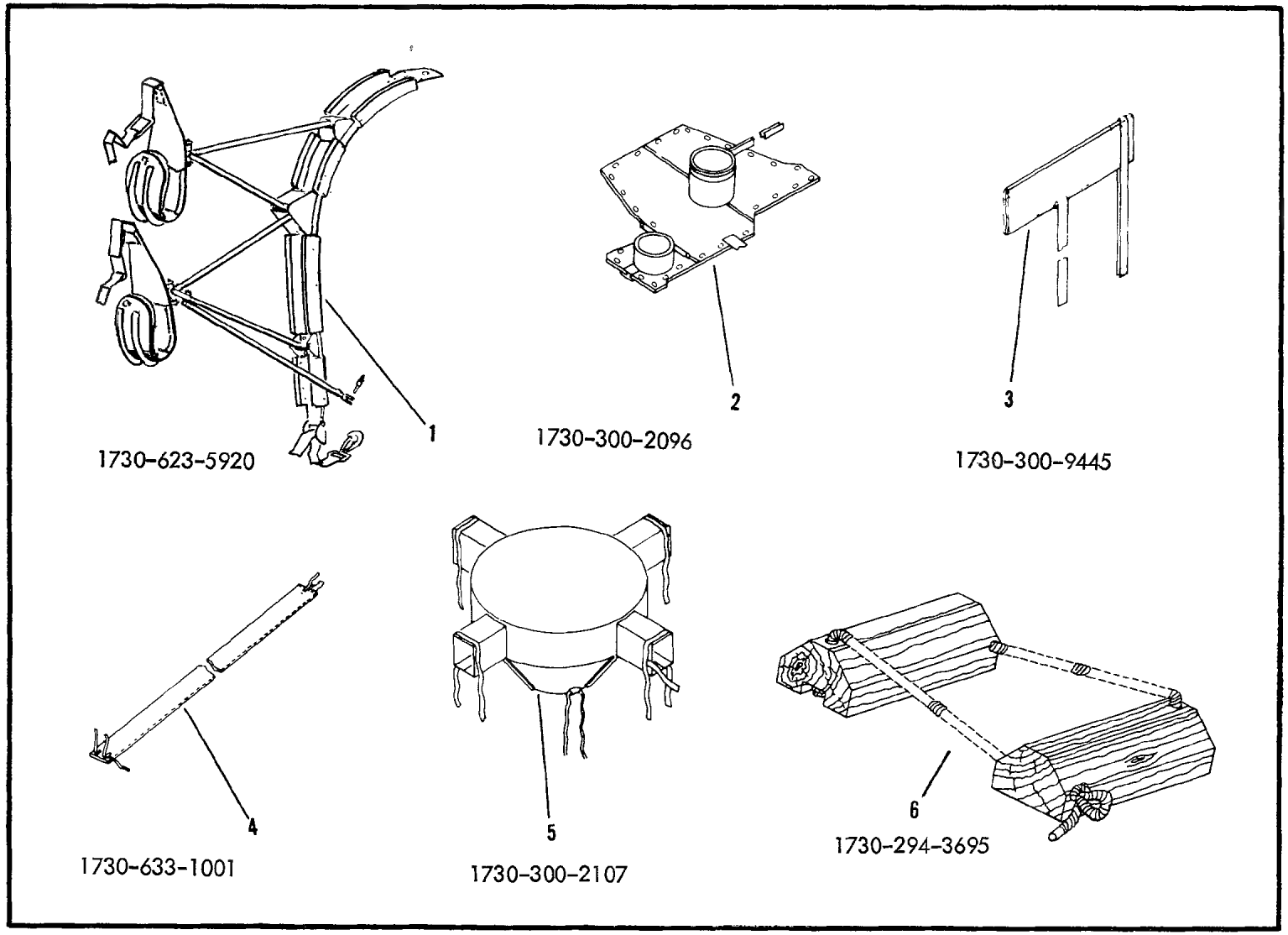

Figure F2. Flyaway Items

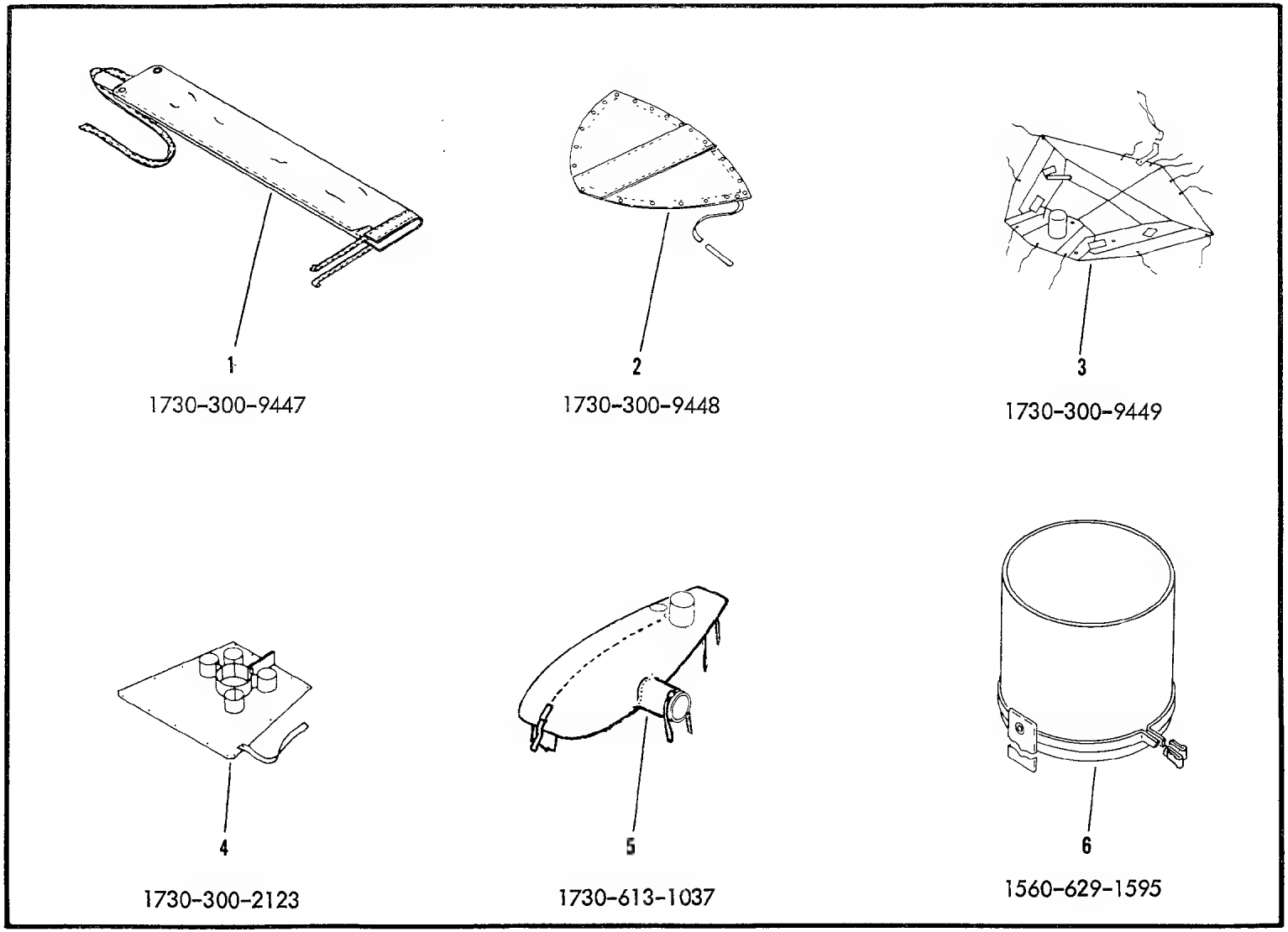

Figure F3. Flyaway Items

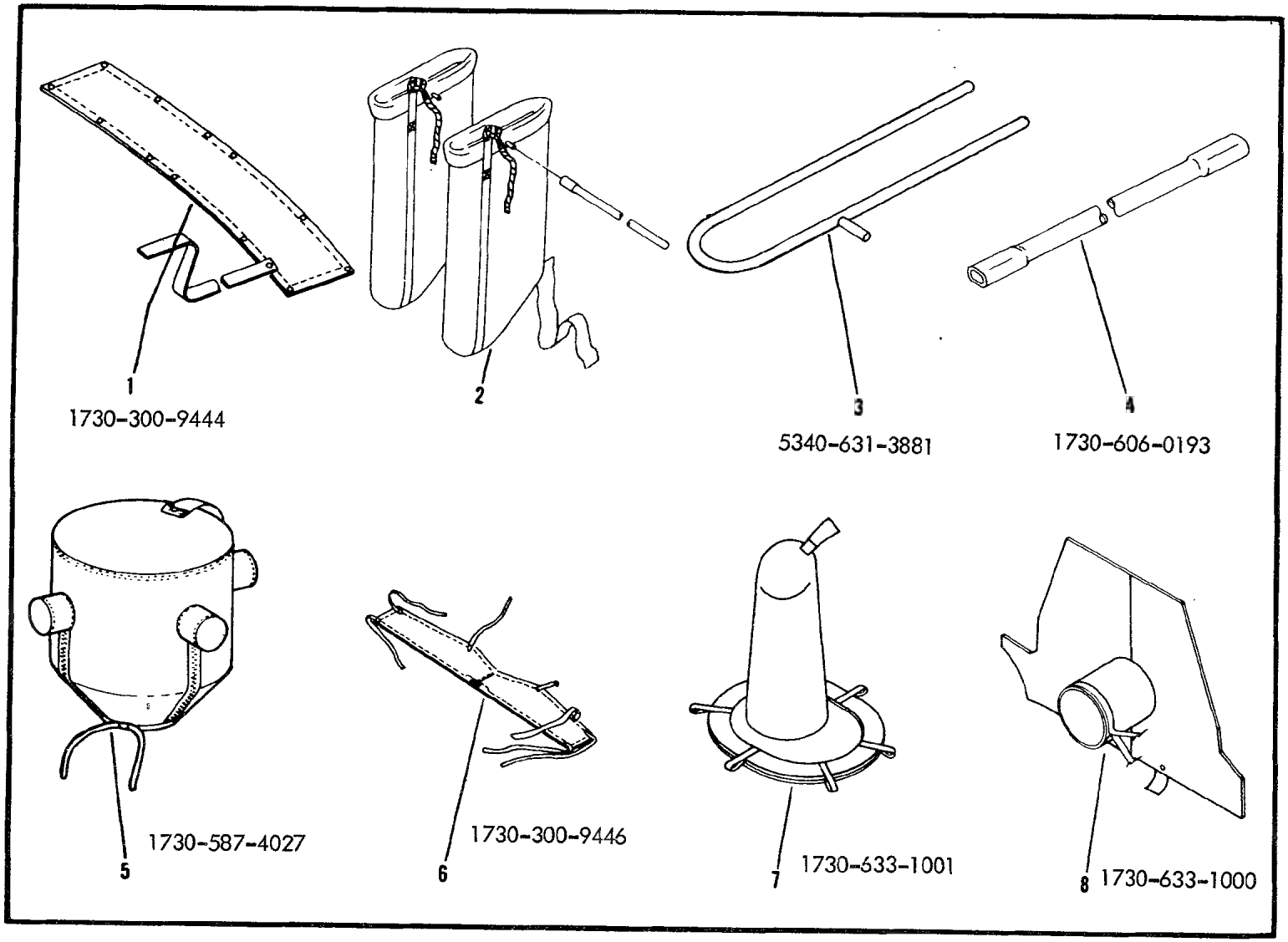

Figure F4. Flyaway Items

1461

SECTION IV

FEDERAL STOCK NUMBER AND REFERENCE NUMBER INDEX

PART 1

NUMERICAL STOCK NUMBER INDEX AND SUPPLEMENTARY INDEX

1461

STOCK NUMBER	FIGURE NUMBER	ITEM NUMBER	STOCK NUMBER	FIGURE NUMBER	ITEM NUMBER
1280-211-9952	113F		1560-098-8267	11	25
1280-570-9096	114A	63	1560-098-8272	49	
1280-570-9096	114L	60	1560-098-8277	154	58
1377-630-9597	125A	37	1560-098-8278	154	
1560-010-0403	172	53	1560-098-8280	24	21
1560-010-7527	17	33	1560-098-8281	31	
1560-018-3370	112	30	1560-098-8283	158	97
1560-022-9002	47	12	1560-098-8285	107	55
1560-022-9869	50		1560-098-8287	107	51
1560-028-1015	80	142	1560-098-8288	107	19
1560-028-1016	80	143	1560-098-8289	107	61
1560-028-1017	80	144	1560-098-8290	104	31
1560-028-1018	81	124	1560-098-8291	104	99
1560-028-1020	81	126	1560-098-8292	104	64
1560-028-1023	76	36	1560-098-8293	102	14
1560-028-1024	76	75	1560-098-8295	104	33
1560-029-9558	31	40	1560-098-8295	104	82
1560-031-5321	28	5	1560-098-8296	102	
1560-034-5298	169	39	1560-189-8411	79	16
1560-056-0555	182	16	1560-189-8411	79	36
1560-056-2319	132	152	1560-189-8411	79	46
1560-062-9527	82	46	1560-189-8411	80	16
1560-065-4382	91	49	1560-189-8411	80	27
1560-066-1389	154		1560-189-8411	81	16
1560-070-2693	50		1560-189-8412	79	3
1560-070-2694	54	66	1560-189-8412	80	3
1560-070-2695	87	83	1560-189-8412	81	3
1560-070-7833	159	31	1560-203-6361	25	66
1560-072-8303	139		1560-212-4751	83	33
1560-072-8304	139		1560-226-2741	46	
1560-072-8305	139		1560-245-3080	42	16
1560-072-8306	139		1560-245-3081	42	
1560-073-6595	169	11	1560-294-0151	162	57
1560-074-1184	41		1560-294-0151	163	4
1560-075-2539	176	62	1560-301-3547	51	18
1560-075-2539	176	65	1560-301-3548	52	4
1560-075-2539	180	7	1560-301-3553	46	
1560-075-2540	118	102	1560-301-3554	46	
1560-076-9802	83		1560-301-3555	46	
1560-076-9803	83		1560-301-3556	46	
1560-076-9804	83		1560-301-3557	46	
1560-076-9805	83		1560-301-3558	46	
1560-083-6757	178	6	1560-301-3561	82	62
1560-083-6761	178		1560-301-3561	82	62
1560-083-6762	178	72	1560-301-3561	82	66
1560-086-6846	41		1560-301-3561	82	70
1560-086-6847	41		1560-301-3561	151	10
1560-086-6848	41		1560-301-3561	151	3
1560-086-6849	41		1560-301-3561	151	7
1560-086-7223	154		1560-301-3561	155	20
1560-090-4484	79	163	1560-301-3562	82	
1560-090-4484	80	98	1560-301-3562	155	34
1560-090-4484	81	81	1560-301-3563	87	3
1560-091-3822	19	23	1560-301-3563	87	37
1560-091-3885	37		1560-301-3566	90	1
1560-091-3905	41		1560-301-3567	97	52
1560-091-3919	41	125	1560-301-8410	70	29
1560-091-4151	159		1560-302-3434	96	124
1560-091-4165	116		1560-302-3447	21	
1560-094-7544	43	96	1560-303-2487	11	22
1560-094-7546	43		1560-303-2488	11	24
1560-098-1521	178		1560-303-2489	11	23
1560-098-1564	163	7	1560-303-2493	20	9
1560-098-1564	164		1560-303-2499	16	
1560-098-1565	162	59	1560-303-2503	19	
1560-098-1573	172		1560-303-2507	16	
1560-098-1576	170		1560-303-2508	18	20
1560-098-1581	176	1	1560-303-2513	21	
1560-098-1582	176	2	1560-303-2541	23	
1560-098-8261	172	24	1560-303-2543	24	
1560-098-8261	172	69	1560-303-2548	27	5

STOCK NUMBER	FIGURE NUMBER	ITEM NUMBER	STOCK NUMBER	FIGURE NUMBER	ITEM NUMBER
1560-303-2551	27	3	1560-307-3573	28	18
1560-303-2552	25	37	1560-307-3574	107	62
1560-303-2553	23	39	1560-307-3575	107	37
1560-303-2554	23	38	1560-307-3575	107	58
1560-303-2555	24		1560-307-3576	107	
1560-303-2556	24	10	1560-307-3580	97	1
1560-303-2557	24	9	1560-307-3615	17	1
1560-303-2559	29	12	1560-307-3619	158	
1560-303-2560	29	11	1560-307-3624	52	40
1560-303-2561	25	83	1560-307-3625	51	11
1560-303-2564	30	5	1560-307-3626	52	46
1560-303-2565	30	6	1560-307-3636	165	1
1560-303-2566	30	4	1560-307-3638	26	
1560-303-2568	23	10	1560-307-3642	156	11
1560-303-2569	30	7	1560-307-3643	156	
1560-303-2570	25		1560-307-3644	151	25
1560-303-2572	26		1560-307-3645	151	
1560-303-2573	25	82	1560-307-3646	156	13
1560-303-2574	29	1	1560-307-3647	151	22
1560-303-2576	23	21	1560-307-3649	156	17
1560-303-2577	23	8	1560-307-3650	156	4
1560-303-2578	23	6	1560-307-3651	82	14
1560-303-2582	26	11	1560-307-3651	82	30
1560-303-2583	25	85	1560-307-3651	82	39
1560-303-2584	23	27	1560-307-3651	82	56
1560-303-2589	25		1560-307-3651	82	80
1560-303-2590	96	136	1560-307-3651	151	17
1560-303-2591	97	17	1560-307-3651	151	27
1560-304-4583	25	25	1560-307-3651	155	13
1560-304-4584	25	28	1560-307-3651	155	29
1560-304-4586	96	55	1560-307-3653	158	76
1560-304-4586	96	62	1560-307-3655	158	78
1560-304-4607	49		1560-307-3657	158	62
1560-304-4609	170	5	1560-307-3660	158	39
1560-304-4610	170	18	1560-307-3662	158	95
1560-304-4612	25	90	1560-307-3663	158	3
1560-304-4613	25		1560-307-3664	158	68
1560-304-4615	29	8	1560-307-3669	157	50
1560-304-4616	29	6	1560-307-3670	157	
1560-304-4619	156		1560-307-3671	157	14
1560-304-4620	156	21	1560-307-3672	157	39
1560-304-4626	158	59	1560-307-3674	156	16
1560-304-4629	157	22	1560-307-3674	157	11
1560-304-4637	178	31	1560-307-3674	157	34
1560-304-4642	178		1560-307-3675	157	24
1560-304-4647	178		1560-307-3675	157	47
1560-304-4650	52	17	1560-307-3676	82	
1560-305-1659	158	26	1560-307-3680	107	88
1560-305-1660	178		1560-308-0152	102	18
1560-305-1662	87		1560-308-0162	162	20
1560-305-4144	25		1560-308-0163	173	38
1560-305-4154	25	79	1560-308-0164	23	35
1560-305-4170	178		1560-308-0167	91	45
1560-305-4173	178		1560-308-0168	91	46
1560-305-4177	183		1560-308-3529	173	45
1560-305-4179	183		1560-308-3532	173	
1560-305-4184	93		1560-308-3533	173	
1560-305-4185	93		1560-308-3534	82	13
1560-305-4186	93		1560-308-3534	82	29
1560-305-4187	93		1560-308-3534	82	38
1560-305-4188	93		1560-308-3534	82	55
1560-305-4190	107	78	1560-308-3534	82	79
1560-305-4192	105		1560-308-3534	151	16
1560-306-4444	157	16	1560-308-3534	151	26
1560-306-4444	157	45	1560-308-3534	155	12
1560-306-4445	157	29	1560-308-3534	155	28
1560-307-3563	19	22A	1560-308-3541	94	16
1560-307-3566	17	12	1560-310-1415	82	
1560-307-3566	103	29	1560-310-1424	91	
1560-307-3567	150	18	1560-310-5367	45	
1560-307-3572	28	24	1560-310-5371	87	

STOCK NUMBER	FIGURE NUMBER	ITEM NUMBER	STOCK NUMBER	FIGURE NUMBER	ITEM NUMBER
1560-313-0576	158	25	1560-326-3475	76	
1560-315-0891	28	23	1560-326-3476	176	34
1560-315-0894	156		1560-326-3477	176	35
1560-315-0895	156	6	1560-326-3482	171	
1560-315-0898	90	26	1560-326-3483	171	
1560-315-5870	17		1560-326-3485	171	
1560-315-5894	159	13	1560-326-3486	171	
1560-315-6334	22	5	1560-326-3489	26	
1560-315-6334	23	19	1560-326-3492	82	
1560-316-2903	96	54	1560-326-3500	88	
1560-317-0852	157	2	1560-326-3504	88	
1560-320-6905	68		1560-326-3505	88	
1560-320-6942	22		1560-326-3506	88	
1560-320-6943	157	3	1560-326-3507	88	7
1560-320-6943	157	5	1560-326-3508	88	
1560-320-9165	37	27	1560-326-3509	88	
1560-323-4271	158		1560-326-3510	88	
1560-323-4283	72	7	1560-326-3511	88	
1560-323-4306	151	18	1560-326-3513	87	
1560-323-4313	179		1560-326-3514	87	
1560-323-4324	107	103	1560-326-3515	87	
1560-323-4327	107	81	1560-326-3516	87	
1560-323-4327	107	90	1560-326-3524	42	23
1560-323-4351	172		1560-327-3841	172	27
1560-323-4353	49	84	1560-327-3841	172	72
1560-323-4354	49		1560-327-3854	16	
1560-323-4361	99		1560-327-3855	38	39
1560-323-4366	39	25	1560-327-3856	48	
1560-323-4367	39	26	1560-327-3858	42	13
1560-323-4369	39		1560-327-3859	154	62
1560-325-9920	25	21	1560-327-3860	154	
1560-326-3404	21		1560-327-3861	154	17
1560-326-3415	41	188	1560-327-3862	160	27
1560-326-3416	48	4	1560-327-3863	160	24
1560-326-3420	48	25	1560-327-3866	46	
1560-326-3422	41	210	1560-327-3866	46	
1560-326-3425	41		1560-327-3869	46	
1560-326-3426	36		1560-327-3870	46	
1560-326-3428	48	18	1560-327-3872	163	9
1560-326-3429	44		1560-327-3873	162	54
1560-326-3429	52	49	1560-327-3875	162	
1560-326-3430	41	89	1560-327-3876	162	
1560-326-3431	150	39	1560-327-3878	55	
1560-326-3432	150	41	1560-327-3879	55	
1560-326-3433	42		1560-327-3879	56	
1560-326-3434	42		1560-327-3880	55	41
1560-326-3436	50	388	1560-327-3881	55	
1560-326-3438	50	383	1560-327-3881	62	
1560-326-3439	42	54	1560-327-3881	71	
1560-326-3440	42		1560-327-3884	55	20
1560-326-3440	42		1560-327-3885	55	26
1560-326-3441	42	52	1560-327-3889	72	
1560-326-3442	42		1560-327-3892	71	
1560-326-3443	42	8	1560-327-3893	72	17
1560-326-3444	42	17	1560-327-3899	78	
1560-326-3453	150		1560-327-3900	78	
1560-326-3454	150		1560-327-3902	79	25
1560-326-3455	150		1560-327-3902	80	50
1560-326-3456	150	102	1560-327-3902	81	39
1560-326-3457	150	85	1560-327-3905	79	
1560-326-3458	154		1560-327-3910	26	14
1560-326-3459	154		1560-327-3912	24	
1560-326-3461	154		1560-328-4810	18	
1560-326-3464	46		1560-328-4813	16	
1560-326-3468	79		1560-328-4827	25	5
1560-326-3470	80		1560-328-4828	25	7
1560-326-3471	79	37	1560-328-4829	31	15
1560-326-3471	79	47	1560-328-4829	31	18
1560-326-3472	79		1560-328-4829	31	30
1560-326-3473	79		1560-328-4833	157	25
1560-326-3474	79		1560-328-4840	153	4

STOCK NUMBER	FIGURE NUMBER	ITEM NUMBER	STOCK NUMBER	FIGURE NUMBER	ITEM NUMBER
1560-328-4842	87		1560-332-3568	107	9
1560-328-4843	87		1560-332-3569	79	194
1560-328-4856	126	1	1560-332-6535	80	
1560-328-4858	122	62	1560-332-6536	80	
1560-328-4859	122	55	1560-332-6537	80	
1560-328-4861	122	56	1560-332-6538	81	
1560-328-5012	118		1560-332-6539	81	
1560-330-0871	126	8	1560-332-6540	81	
1560-330-0875	132	97	1560-332-6544	171	12
1560-330-6169	71	6	1560-332-6545	171	13
1560-330-6170	55	68	1560-332-6546	171	14
1560-330-6171	55	66	1560-332-6547	171	17
1560-330-6171	62	20	1560-332-6548	171	21
1560-330-6171	71	8	1560-332-6549	171	22
1560-330-6172	55	75	1560-332-6550	51	4
1560-330-6172	56	90	1560-332-6550	53	
1560-330-6174	26		1560-332-6551	52	37A
1560-330-6176	26	33	1560-332-6551	53	
1560-330-6178	26	7	1560-332-6556	178	
1560-330-6181	41		1560-332-6558	171	16
1560-330-6183	107		1560-333-4694	12	
1560-330-6185	116		1560-333-7043	80	
1560-330-6186	158	96	1560-333-7045	76	
1560-331-5075	91	23	1560-334-6351	70	18
1560-331-5076	91		1560-334-6352	55	93
1560-332-3513	38	35	1560-334-6353	55	
1560-332-3514	41	8	1560-334-6355	55	79
1560-332-3514	46	1	1560-334-6356	79	21
1560-332-3515	150	27	1560-334-6356	80	32
1560-332-3516	165		1560-334-6356	81	21
1560-332-3520	79	104	1560-334-6357	79	
1560-332-3520	79	111	1560-334-6359	80	
1560-332-3520	79	122	1560-334-6360	76	
1560-332-3520	79	129	1560-334-6361	170	15
1560-332-3521	79		1560-334-6362	25	74
1560-332-3522	79		1560-334-6367	179	11
1560-332-3523	79	17	1560-334-6372	87	
1560-332-3523	80	17	1560-334-6373	87	109
1560-332-3523	80	28	1560-334-6376	87	
1560-332-3523	81	17	1560-334-6377	91	
1560-332-3525	79		1560-334-6378	91	
1560-332-3526	79		1560-334-6381	107	
1560-332-3527	79		1560-334-6382	107	33
1560-332-3528	79		1560-334-6384	107	85
1560-332-3529	79		1560-334-6385	107	75
1560-332-3530	74	13	1560-334-6386	107	
1560-332-3530	75	11	1560-334-6387	107	
1560-332-3532	76	42	1560-334-6388	87	
1560-332-3533	76		1560-334-6389	107	74
1560-332-3535	74		1560-334-6390	107	82
1560-332-3535	75		1560-334-6390	107	93
1560-332-3536	176	42	1560-334-6392	104	
1560-332-3538	171		1560-334-6393	101	113
1560-332-3549	88	37	1560-334-6394	102	
1560-332-3550	88	36	1560-334-6395	102	
1560-332-3551	93		1560-334-6396	102	6
1560-332-3552	93	6	1560-334-6397	102	15
1560-332-3553	93	28	1560-334-6400	153	
1560-332-3554	91		1560-334-6401	153	
1560-332-3555	91		1560-334-6408	159	
1560-332-3557	87		1560-334-6409	159	
1560-332-3558	87		1560-334-6410	159	
1560-332-3559	87		1560-334-6411	159	1
1560-332-3560	87		1560-334-6413	101	
1560-332-3561	87		1560-334-6414	101	
1560-332-3562	87		1560-334-6415	101	
1560-332-3563	87		1560-334-6416	87	
1560-332-3564	87		1560-334-6417	159	
1560-332-3565	87		1560-334-6419	123	
1560-332-3566	87		1560-334-6420	123	
1560-332-3567	87		1560-334-6421	123	

STOCK NUMBER	FIGURE NUMBER	ITEM NUMBER	STOCK NUMBER	FIGURE NUMBER	ITEM NUMBER
1560-334-6422	123		1560-340-1265	28	25
1560-334-6423	123		1560-340-1313	131	31
1560-334-6424	123		1560-340-1313	132	17
1560-334-6425	123	20	1560-340-1352	49	83A
1560-334-6426	123	58	1560-340-1380	17	
1560-334-6427	32	214	1560-340-1829	29	13
1560-334-6428	97	29	1560-340-1881	87	94
1560-334-6430	147	15	1560-340-1888	125	5
1560-335-6956	76		1560-340-1994	125	12
1560-335-8832	176	41	1560-340-2019	11	33
1560-335-8833	87		1560-340-2023	155	
1560-336-0057	41	203	1560-340-2032	157	4
1560-336-0394	172	26	1560-340-2126	106	
1560-336-0394	172	71	1560-340-6783	76	16
1560-336-0683	49	123	1560-340-6783	76	57
1560-336-0756	49		1560-341-0854	54	71
1560-336-0764	150	90	1560-341-0855	54	
1560-336-0770	154		1560-342-8922	79	
1560-336-0774	160	7	1560-342-8923	138	56
1560-336-0775	154		1560-342-8923	139	40
1560-336-0776	160	12	1560-342-8924	138	57
1560-336-0779	45	34	1560-342-8924	139	41
1560-336-0782	45	35	1560-345-2957	102	1
1560-336-0835	68	5	1560-345-6719	55	32
1560-336-0853	70	26	1560-345-6719	55	38
1560-336-0856	79		1560-346-1158	104	37
1560-336-0861	79		1560-346-1160	82	85
1560-336-0865	76		1560-346-1160	151	32
1560-336-0875	74		1560-346-1160	155	33
1560-336-1028	176		1560-346-1162	39	
1560-336-1142	82	20	1560-346-1168	178	
1560-336-1142	83		1560-346-1170	162	55
1560-336-1160	158	66	1560-346-3835	172	
1560-336-1645	97	19	1560-346-3836	172	29
1560-336-7955	55	50	1560-346-3836	172	74
1560-336-7956	79		1560-346-3837	172	107
1560-336-7957	79		1560-346-3837	172	109
1560-336-7958	153		1560-346-3837	172	111
1560-336-7959	159		1560-347-3441	50	
1560-336-7960	123		1560-348-5652	109	14
1560-339-9570	69	12	1560-348-8460	42	
1560-339-9574	87		1560-348-8473	42	
1560-339-9577	133	14	1560-348-9884	48	36
1560-339-9578	144	142	1560-348-9962	16	
1560-339-9578	145	186	1560-348-9967	25	69
1560-339-9616	54	67	1560-373-7070	172	
1560-339-9625	83	25	1560-397-1412	47	3
1560-340-0173	50	213	1560-397-1586	178	
1560-340-0174	39	27	1560-397-1607	178	
1560-340-0288	72	3	1560-397-1630	11	37
1560-340-0371	79	52	1560-438-2103	23	
1560-340-0371	79	90	1560-440-1801	180	
1560-340-0371	80	141	1560-440-1834	74	
1560-340-0401	79	177	1560-440-3367	172	22
1560-340-0403	80	121	1560-440-3367	172	67
1560-340-0403	81	104	1560-445-3482	181	1
1560-340-0408	79	7	1560-445-6239	84	
1560-340-0408	80	7	1560-446-1443	50	
1560-340-0408	81	7	1560-446-1535	84A	9
1560-340-0491	176		1560-446-2987	89	8
1560-340-1066	87		1560-446-2988	102	28
1560-340-1105	87		1560-446-6344	167	20
1560-340-1110	104	21	1560-446-6344	180	
1560-340-1110	104	53	1560-446-6390	48	40
1560-340-1133	41	15	1560-446-6391	140	45
1560-340-1138	101	31	1560-474-3109	154	
1560-340-1139	101	49	1560-475-1964	96	13
1560-340-1148	116	12	1560-475-1964	106	
1560-340-1172	125	3	1560-475-3927	96	70
1560-340-1175	125	16	1560-489-2811	154	
1560-340-1226	62	22	1560-505-8493	79	

STOCK NUMBER	FIGURE NUMBER	ITEM NUMBER	STOCK NUMBER	FIGURE NUMBER	ITEM NUMBER
1560-505-8496	72		1560-520-6318	158	19
1560-506-0515	38	29	1560-520-6320	91	
1560-506-0516	38	22	1560-520-6324	112	5
1560-506-0516	38	22	1560-520-6325	112	
1560-508-6875	38	70	1560-520-6326	123	32
1560-508-7342	47	11	1560-520-6327	123	
1560-508-7342	47	8	1560-520-6568	28	
1560-508-7447	49	24	1560-521-9174	38	56
1560-508-7447	49	35	1560-522-8893	12	72
1560-508-7569	49	31	1560-522-8893	12	72
1560-508-7570	49	29	1560-522-8894	38	55
1560-508-7571	49	26	1560-522-8897	79	170
1560-508-7572	49	21	1560-522-8897	80	111
1560-508-7576	49	18	1560-522-8897	81	94
1560-508-7697	49	16	1560-523-4943	100	41
1560-508-7706	49	14	1560-524-2644	50	
1560-508-9604	49		1560-524-2647	117	99
1560-508-9712	49		1560-524-2647	118	82
1560-508-9713	49		1560-524-5118	80	138
1560-509-0434	49		1560-524-5118	81	117
1560-509-0435	49		1560-524-5137	43	
1560-509-0446	49		1560-524-8337	158	18
1560-509-0448	49		1560-524-8378	23	4
1560-509-0467	49	111	1560-524-8379	21	5
1560-509-0485	49	114	1560-524-8386	152	28
1560-509-0488	49		1560-525-5671	179	19
1560-509-0491	43		1560-526-9225	25	6
1560-509-0494	174	13	1560-527-0399	107	72
1560-509-0494	174	23	1560-527-0399	107	92
1560-509-0633	88	24	1560-527-6288	158	13
1560-509-0633	88	31	1560-527-6951	157	
1560-509-0641	121		1560-528-1598	83	20
1560-509-4548	50	158	1560-528-5131	20	15
1560-509-4567	21	19	1560-528-5431	154	
1560-509-4594	162	62	1560-529-7070	162	32
1560-509-4620	173		1560-529-8199	28	27
1560-509-4633	23	16	1560-530-0839	78	28
1560-509-4676	116	34	1560-530-1052	79	24
1560-509-7572	79		1560-530-1052	79	24
1560-509-7572	80	1	1560-530-1052	80	44
1560-509-7572	81	1	1560-530-1052	81	33
1560-510-4094	176	81	1560-530-1191	154	51
1560-510-4096	91	15	1560-530-7303	58	28
1560-510-4098	104	63	1560-530-7303	78	34
1560-510-4099	104	98	1560-530-7304	83	35
1560-510-4100	104		1560-530-7304	84	13
1560-511-5080	104		1560-531-9095	38	3
1560-511-5081	104	68	1560-531-9095	38	5
1560-511-5081	104	84	1560-532-1741	107	47
1560-511-9522	37		1560-532-2328	138	30
1560-515-5675	27		1560-532-3700	123	79
1560-515-5688	158	36	1560-532-7395	171	
1560-515-5688	158	41	1560-532-7397	178	
1560-516-0357	49	124	1560-533-0272	17	
1560-516-1066	165	38	1560-534-2156	101	118
1560-516-1276	70	21	1560-534-2156	101	128
1560-516-8908	150	87	1560-534-2156	101	78
1560-517-0213	20	16	1560-534-2156	101	88
1560-517-0213	20	16	1560-534-2156	152	15
1560-520-1016	52		1560-535-5580	107	49
1560-520-1018	112	37	1560-536-3056	31	
1560-520-1018	112	49	1560-536-3071	17	27
1560-520-1019	112	22	1560-536-8034	24	14
1560-520-6277	47	6	1560-536-8106	138	35
1560-520-6307	50		1560-537-2087	150	61
1560-520-6308	50	358	1560-537-2087	150	61
1560-520-6309	51	22	1560-541-9743	96	
1560-520-6310	50	376	1560-541-9907	16	65
1560-520-6312	79		1560-541-9975	96	
1560-520-6313	172		1560-541-9975	96	104
1560-520-6317	25	45	1560-541-9976	96	

STOCK NUMBER	FIGURE NUMBER	ITEM NUMBER	STOCK NUMBER	FIGURE NUMBER	ITEM NUMBER
1560-541-9976	96	103	1560-546-1141	122	
1560-544-0604	79		1560-546-1148	122	10
1560-544-0902	79	69	1560-546-1149	122	12
1560-544-0903	79	50	1560-546-4395	33	39
1560-544-0904	79	53	1560-546-8556	123	84
1560-544-0904	79	91	1560-547-7517	41	53
1560-544-0906	77		1560-550-6491	79	173
1560-544-0906	79		1560-550-6491	79	175
1560-544-0907	77		1560-550-6491	80	114
1560-544-0907	79		1560-550-6491	80	117
1560-544-0908	79		1560-550-6491	81	97
1560-544-0909	79	169	1560-550-6491	81	99
1560-544-0909	80	107	1560-551-2089	178	7
1560-544-0909	81	90	1560-551-2096	131	56
1560-544-0910	79		1560-551-2096	132	80
1560-544-0911	79	168	1560-551-7059	107	87
1560-544-0911	80	106	1560-551-7060	102	5
1560-544-0911	81	89	1560-551-7067	107	48
1560-544-0912	79	164	1560-551-7067	107	84
1560-544-0912	80	99	1560-554-1050	170	40
1560-544-0912	81	82	1560-554-1085	90	5
1560-544-0913	117	51	1560-554-1088	49	125
1560-544-0914	117	103	1560-554-1090	107	83
1560-544-0914	117	23	1560-554-1091	107	
1560-544-0914	117	47	1560-554-1092	90	4
1560-544-0914	117	78	1560-554-4420	176	47
1560-544-0914	117	84	1560-554-5485	102	21
1560-544-0915	117	101	1560-554-6531	108	45
1560-544-0915	117	19	1560-554-6531	108	48
1560-544-0915	117	45	1560-558-2487	77	36
1560-544-0915	117	80	1560-558-7573	87	108
1560-544-0915	118	125	1560-559-4759	129	13
1560-544-0915	118	18	1560-559-4759	134	9
1560-544-0915	118	7	1560-559-6169	78	16
1560-544-0915	118	78	1560-559-6169	78	3
1560-544-0920	115	64	1560-560-5328	114	
1560-544-0920	120	53	1560-560-5349	41	199
1560-544-0920	120	58	1560-560-5351	44	15
1560-544-0920	120	64	1560-560-5352	43	24
1560-544-0920	120	9	1560-560-5353	43	7
1560-544-0930	117	15	1560-560-5354	43	9
1560-544-0930	118	67	1560-560-5354	43	9
1560-544-0931	117	74	1560-560-5355	43	5
1560-544-0931	118	157	1560-560-5369	56	26
1560-544-0932	117	39	1560-560-5370	169	
1560-544-0932	118	57	1560-560-5372	56	
1560-544-0933	49		1560-560-5373	56	
1560-544-0934	49		1560-560-5374	56	
1560-544-0944	122		1560-560-5375	56	
1560-544-0946	120	25	1560-560-5376	56	
1560-544-0946	120	70	1560-560-5377	169	
1560-544-0947	120	15	1560-560-5378	169	
1560-544-0948	79		1560-560-5379	56	
1560-544-0949	79	56	1560-560-5380	56	
1560-544-0950	49	67	1560-560-5381	56	
1560-545-7128	41		1560-560-5390	56	98
1560-545-9798	79		1560-560-5391	169	90
1560-545-9799	79		1560-560-5396	169	67
1560-545-9800	79	106	1560-560-5398	84	23
1560-545-9800	79	117	1560-560-5399	82	
1560-545-9801	79	124	1560-560-5400	107	104
1560-545-9801	79	99	1560-560-5401	152	25
1560-546-1136	117	30	1560-560-5404	79	193
1560-546-1136	117	65	1560-560-9143	105	3
1560-546-1136	117	91	1560-560-9144	170	38
1560-546-1136	118	14	1560-560-9146	158	48
1560-546-1138	117	49	1560-560-9147	153	
1560-546-1138	118	133	1560-560-9148	117	6
1560-546-1138	118	33	1560-560-9149	154	9
1560-546-1138	118	87	1560-562-2859	169	68
1560-546-1139	117	43	1560-562-2860	169	71

STOCK NUMBER	FIGURE NUMBER	ITEM NUMBER	STOCK NUMBER	FIGURE NUMBER	ITEM NUMBER
1560-562-4971	176		1560-564-1503	177	
1560-562-4972	176	79	1560-564-1504	178	
1560-562-4973	176	78	1560-564-1506	183	8
1560-562-7897	19	26	1560-564-1507	183	12
1560-563-2710	49		1560-564-1508	165	25
1560-563-2710	49	55A	1560-564-1508	166	
1560-563-6717	57		1560-564-1510	170	41
1560-563-9769	153	16	1560-564-1512	158	90
1560-563-9844	49		1560-564-1515	172	3
1560-563-9849	42		1560-564-1516	172	41
1560-563-9850	42		1560-564-1517	172	66
1560-563-9853	50	46	1560-564-1528	41	158
1560-563-9859	41	121	1560-564-1529	41	
1560-563-9860	150	24	1560-564-1530	36	34
1560-563-9863	150	1	1560-564-5724	38	10
1560-563-9864	150	14	1560-564-5724	38	18
1560-563-9865	154		1560-564-5725	170	
1560-563-9866	154	14	1560-564-5729	112	
1560-563-9868	45		1560-564-5731	126	35
1560-563-9869	44		1560-564-5732	126	34
1560-563-9870	44		1560-564-5733	126	2
1560-563-9871	44		1560-564-5737	106	67
1560-563-9872	41		1560-564-6463	155	
1560-563-9873	41		1560-564-8158	74	68
1560-563-9874	41		1560-564-8158	75	84
1560-563-9875	41		1560-565-3627	79	
1560-563-9876	41		1560-565-3628	25	94
1560-563-9877	41		1560-565-5590	11	
1560-563-9879	43	26	1560-565-5604	41	
1560-563-9880	43		1560-565-5607	64	3
1560-563-9882	43	13	1560-565-5608	72	16
1560-563-9883	43	22	1560-565-5610	58	20
1560-563-9884	43		1560-565-5611	58	
1560-563-9885	54	69	1560-565-5620	176	12
1560-563-9886	54	70	1560-565-5621	176	13
1560-563-9891	55		1560-565-5622	26	
1560-563-9894	57		1560-565-5622	26	21
1560-563-9900	65	3	1560-565-5628	158	51
1560-563-9909	65		1560-565-5645	116	30
1560-563-9910	76	43	1560-565-5646	116	4
1560-563-9911	74		1560-565-7315	169	
1560-563-9911	75		1560-565-7318	100	18
1560-563-9912	74	60	1560-565-8483	30	1
1560-563-9912	75	73	1560-565-8484	178	34
1560-563-9913	74		1560-565-8486	61	8
1560-563-9913	75		1560-565-8487	58	15
1560-563-9916	74	66	1560-565-8488	55	34
1560-563-9916	75	82	1560-565-8489	55	28
1560-563-9917	74		1560-565-8492	101	
1560-563-9917	75		1560-565-8494	52	31
1560-563-9918	74		1560-565-8495	51	
1560-563-9918	75		1560-565-8498	115	21
1560-563-9921	74		1560-565-8499	122	15
1560-563-9928	170	1	1560-565-8500	140	12
1560-563-9929	170	2	1560-565-8500	141	16
1560-563-9930	170	39	1560-566-2399	38	19
1560-563-9930	170	4	1560-566-2403	49	
1560-563-9932	170		1560-566-2405	45	1
1560-563-9934	169	68A	1560-566-2407	165	59
1560-563-9937	171	15	1560-566-2409	57	13
1560-563-9949	179	18	1560-566-2412	57	3
1560-563-9951	87	134	1560-566-2413	57	4
1560-563-9952	87	18	1560-566-2416	172	97
1560-563-9953	159	5	1560-566-2419	101	14
1560-563-9954	87	153	1560-566-2422	32	171
1560-563-9955	87	142	1560-566-2426	97	12
1560-563-9956	87	112	1560-566-3232	42	20
1560-563-9957	101	37	1560-566-3234	36	
1560-563-9960	101	39	1560-566-3236	169	
1560-563-9963	126	9	1560-566-3238	176	74
1560-564-1497	90	19	1560-566-3238	176	76

STOCK NUMBER	FIGURE NUMBER	ITEM NUMBER	STOCK NUMBER	FIGURE NUMBER	ITEM NUMBER
1560-566-3245	105		1560-570-0646	77	75
1560-566-3247	116	17	1560-570-0646	77	80
1560-566-3249	79	192	1560-570-0646	77	89
1560-566-3250	79	195	1560-570-0646	77	94
1560-566-4289	80	88	1560-570-0646	77	99
1560-566-4289	81	71	1560-570-0647	76	32
1560-566-4290	80	139	1560-570-0647	76	71
1560-566-4294	79		1560-570-0648	76	39
1560-566-4303	25	92	1560-570-0649	74	
1560-566-8107	50		1560-570-0653	107	71
1560-567-1080	96		1560-570-0658	104	28
1560-567-1089	21		1560-570-0658	104	60
1560-567-1092	17		1560-570-0660	101	107
1560-567-1095	42		1560-570-0660	101	73
1560-567-1096	36	21	1560-570-0661	101	124
1560-567-1098	36	22	1560-570-0661	101	84
1560-567-1099	39	23	1560-570-0665	108	52
1560-567-1100	41	169	1560-570-0674	133	18
1560-567-1100	41	173	1560-570-0676	140	1
1560-567-1100	41	178	1560-570-0677	140	6
1560-567-1100	41	183	1560-570-0678	138	13
1560-567-1100	48	16	1560-570-0681	105	35
1560-567-1104	80		1560-570-0684	68	8
1560-567-1104	81		1560-570-2046	15	
1560-567-1106	79		1560-570-2367	106	
1560-567-1110	23	15	1560-570-2367	106	
1560-567-1112	84	45	1560-570-4064	96	33
1560-567-1115	87	120	1560-570-4064	106	10
1560-567-1119	122	52	1560-570-4065	122	64
1560-567-1125	96	80	1560-570-4065	122	66
1560-567-1126	79	196	1560-570-4853	55	10
1560-567-5215	55		1560-570-4853	55	17
1560-567-5349	133	22	1560-570-4853	69	9
1560-567-5350	136	42	1560-570-4855	146	3
1560-567-5352	138	58	1560-570-4858	154	23
1560-567-5354	122		1560-570-4859	160	9
1560-567-6932	106	36	1560-570-4861	154	
1560-567-9841	48	22	1560-570-4865	54	73
1560-568-3823	103	16	1560-570-4869	69	16
1560-568-5268	158	22	1560-570-4870	68	11
1560-568-7756	83	23	1560-570-4871	55	51
1560-570-0577	102	10	1560-570-4879	170	32
1560-570-0590	41	63	1560-570-4880	170	28
1560-570-0594	47		1560-570-4886	84	19
1560-570-0595	49		1560-570-4888	158	60
1560-570-0596	105	4	1560-570-4889	157	40
1560-570-0597	41	11	1560-570-4894	112	36
1560-570-0601	49		1560-570-4897	121	5
1560-570-0606	49		1560-570-9845	46	41
1560-570-0607	49		1560-571-1547	158	89
1560-570-0612	49		1560-571-3518	154	
1560-570-0615	45	14	1560-571-3525	154	
1560-570-0617	44	19A	1560-571-3527	154	178
1560-570-0626	43	89	1560-571-6219	96	6
1560-570-0632	71	1	1560-571-6227	82	4
1560-570-0633	78	39	1560-571-6227	82	49
1560-570-0641	55	55	1560-571-6227	82	6
1560-570-0643	79	19	1560-571-6227	82	73
1560-570-0643	80	30	1560-571-6227	155	24
1560-570-0643	81	19	1560-571-6227	155	8
1560-570-0644	79		1560-571-6228	36	
1560-570-0646	77	104	1560-571-6229	74	31
1560-570-0646	77	108	1560-571-6229	75	41
1560-570-0646	77	113	1560-571-6229	75	44
1560-570-0646	77	119	1560-571-6231	172	39
1560-570-0646	77	124	1560-571-6233	26	
1560-570-0646	77	54	1560-571-6233	26	27
1560-570-0646	77	56	1560-571-8251	41	
1560-570-0646	77	62	1560-572-2081	172	
1560-570-0646	77	64	1560-572-6869	125	
1560-570-0646	77	69	1560-572-8278	157	23

STOCK NUMBER	FIGURE NUMBER	TEM NUMBER	STOCK NUMBER	FIGURE NUMBER	ITEM NUMBER
1560-572-8283	74		1560-587-2611	107	64
1560-572-8283	75		1560-587-2612	108	38
1560-572-8284	123	41	1560-587-6295	122	41
1560-572-8285	123	44	1560-587-6296	107	80
1560-572-8286	123	47	1560-587-6296	107	89
1560-572-8287	123	45	1560-587-6297	105	61
1560-572-8288	123	42	1560-587-6298	117	
1560-572-8289	123	48	1560-587-6298	118	
1560-573-4088	165		1560-587-6299	122	48
1560-573-4089	165	50	1560-587-6300	122	50
1560-574-6391	16		1560-587-6305	182	
1560-574-6396	38	17	1560-587-6381	172	
1560-574-6396	38	9	1560-587-6410	45	
1560-574-6397	38	15	1560-587-9379	49	
1560-574-6397	38	7	1560-587-9380	49	
1560-574-6399	58	1	1560-587-9381	49	
1560-574-6401	58	5	1560-587-9382	49	
1560-574-8025	37		1560-587-9383	49	
1560-575-1117	98		1560-589-0890	90	
1560-575-1989	169		1560-589-3781	80	86
1560-575-1994	33	41	1560-589-3781	81	69
1560-575-2017	48	1	1560-589-3800	106	
1560-575-2025	49		1560-589-3801	106	19
1560-575-2026	50	247	1560-589-4273	87	93
1560-575-2035	81	125	1560-589-4275	107	16
1560-575-2039	75		1560-589-4281	78	29
1560-575-2048	150		1560-589-4290	112	35
1560-575-2049	39	15	1560-589-4291	112	38
1560-575-2055	45		1560-589-4298	39	20
1560-575-2061	152	14	1560-589-4298	39	20
1560-575-2061	152	14	1560-589-4300	21	40
1560-575-2062	152	9	1560-589-4306	152	32
1560-575-2067	54		1560-589-4307	152	33
1560-575-2068	54	55	1560-589-6063	103	
1560-575-2074	55	13	1560-589-6073	79	9
1560-575-2074	55	14	1560-589-6073	80	9
1560-575-6386	167		1560-589-6073	81	9
1560-575-6390	176	49	1560-589-6082	126	
1560-575-6410	84	25	1560-589-6085	88	25
1560-575-6466	91	13	1560-589-8443	151	28
1560-575-6467	91	39	1560-589-8443	151	28
1560-575-6471	87	79	1560-589-8444	71	11
1560-575-6471	91	37	1560-589-8444	73	1
1560-576-9136	13	7	1560-589-9122	41	
1560-576-9350	46	62	1560-590-0358	172	105
1560-576-9690	26		1560-590-0368	76	34
1560-576-9690	26	23	1560-590-0368	76	73
1560-580-8399	106		1560-590-0369	76	24
1560-586-6757	87		1560-590-0369	76	63
1560-586-6758	87	81	1560-590-3753	21	41
1560-586-6759	87	76	1560-590-3753	21	41
1560-586-6760	87	80	1560-590-7769	110	62
1560-586-6762	87		1560-590-7769	111	67
1560-586-6778	152	36	1560-590-7769	111	72
1560-586-6780	112	23	1560-590-7774	95	8
1560-586-6786	126	22	1560-591-0531	154	
1560-586-6787	126	29	1560-591-0534	108	44
1560-586-6788	126	16	1560-591-0535	108	46
1560-586-6789	126	17	1560-591-0541	80	46
1560-586-6790	126	18	1560-591-0541	81	35
1560-586-6799	128	6	1560-591-0547	172	30
1560-586-6800	128	7	1560-591-0547	172	75
1560-586-6801	128	8	1560-591-0548	172	32
1560-586-6802	128	18	1560-591-0548	172	77
1560-586-6820	A18		1560-591-0549	170	7
1560-587-0979	116	10	1560-591-0555	112	1
1560-587-0982	116	8	1560-591-0560	41	107
1560-587-2609	47	14	1560-591-0560	50	248B
1560-587-2610	44		1560-591-0560	123	8
1560-587-2610	45		1560-591-6533	150	111
1560-587-2611	107	39	1560-591-6534	150	108

STOCK NUMBER	FIGURE NUMBER	ITEM NUMBER	STOCK NUMBER	FIGURE NUMBER	ITEM NUMBER
1560-591-6545	123	15	1560-601-0301	172	1
1560-591-6555	177		1560-601-0302	176	59
1560-591-6576	172	20	1560-601-0344	178	
1560-591-6584	91	38	1560-603-4199	114G	106
1560-591-6585	91	43	1560-603-4199	114H	102
1560-591-6589	87	159	1560-603-4199	114J	87
1560-591-6590	87	161	1560-604-5252	123	
1560-591-6591	87	167	1560-605-3175	123	
1560-591-6592	87	169	1560-605-9136	123	
1560-591-6593	87	151	1560-605-9137	123	
1560-591-6594	87	148	1560-606-7515	79	10
1560-591-6598	87	104	1560-606-7515	80	10
1560-591-6599	87	121	1560-606-7515	81	10
1560-591-6600	87	122	1560-606-7516	88	
1560-591-6601	87	163	1560-606-7517	88	17
1560-591-6604	107	17	1560-606-7518	88	21
1560-591-6605	107	14	1560-606-7519	88	8
1560-591-6606	107	22	1560-606-7520	93	14
1560-591-6645	178		1560-606-7521	87	165
1560-591-6648	177	3	1560-606-7522	102	19
1560-591-6661	154		1560-606-7523	105	9
1560-591-6664	158	14	1560-606-7524	153	13
1560-591-6665	158	17	1560-606-7525	153	17
1560-591-6669	155		1560-606-7526	159	17
1560-591-6673	79	158	1560-606-7527	159	26
1560-591-6673	80	102	1560-606-7528	159	20
1560-591-6673	81	85	1560-608-0702	12	43
1560-591-6698	123		1560-608-1119	36	16
1560-591-6704	87	6	1560-608-1834	172	64
1560-591-6705	88	38	1560-609-3026	41	206
1560-591-6706	89	6	1560-611-2531	74	4
1560-591-6707	88	22	1560-611-3468	41	200
1560-591-6707	89	4	1560-611-3469	41	159
1560-591-6708	89	5	1560-611-3472	46	22
1560-591-6709	88	32	1560-611-3473	46	
1560-591-6710	88		1560-611-3474	46	44
1560-591-6716	56	54	1560-611-3475	46	46
1560-591-6727	58	21	1560-611-3476	46	55
			1560-611-3477	46	
			1560-611-3478	46	39
1560-591-6748	102	32	1560-611-3479	46	34
1560-591-6751	150	37	1560-611-3480	46	
1560-591-6762	162	53	1560-611-3481	76	
1560-591-6764	93	8	1560-611-3482	76	55
1560-591-6766	93	19	1560-611-5911	49	37
1560-591-6767	93	22	1560-611-6555	25	64
1560-591-6771	91	41	1560-611-6556	26	
1560-591-6772	91	17	1560-611-7230	123	1
1560-591-6772	91	20	1560-611-7269	159	10
1560-591-6775	93	39	1560-612-7198	177	
1560-591-6776	93	32	1560-613-0949	39	22
1560-591-6791	25	11	1560-613-0950	58	
1560-591-6796	23	23	1560-613-0952	74	24
1560-591-6797	23	5	1560-613-0952	75	37
1560-591-6800	37		1560-613-0955	18	17
1560-591-6808	50		1560-613-0965	67	
1560-591-6826	41	207	1560-613-0965	67	23
1560-591-6831	41	162	1560-613-0969	67	1
1560-591-9655	41		1560-613-1007	107	94
1560-592-0603	76	28	1560-613-1009	101	46
1560-592-0603	76	67	1560-613-1260	123	33
1560-592-0610	150		1560-613-1302	123	
1560-592-5461	78	12	1560-613-3007	58	26
1560-592-8168	170	36	1560-613-3014	39	24
1560-600-2197	178		1560-613-3019	43	71
1560-600-2202	178		1560-613-3025	151	
1560-600-2212	178		1560-613-3027	48	11
1560-600-3411	174		1560-613-3029	50	
1560-600-4568	112	47	1560-613-3041	169	39
1560-601-0298	105	66	1560-613-3214	41	
1560-601-0299	102	22	1560-613-4841	33	12

STOCK NUMBER	FIGURE NUMBER	ITEM NUMBER	STOCK NUMBER	FIGURE NUMBER	ITEM NUMBER
1560-613-9283	58		1560-625-4512	53	
1560-613-9570	117	31	1560-625-4514	41	191
1560-613-9570	117	31	1560-625-4515	150	
1560-613-9620	123		1560-625-4516	42	
1560-613-9621	123		1560-625-4517	42	
1560-613-9622	126	20	1560-625-4518	43	20
1560-613-9657	123	35	1560-625-4519	43	
1560-613-9660	140	5	1560-625-4521	79	45
1560-613-9660	141	2	1560-625-4523	74	50
1560-613-9661	141	3	1560-625-4523	75	63
1560-613-9670	141	25	1560-625-8726	77	
1560-613-9679	35	36	1560-625-9316	169	
1560-614-1752	177		1560-625-9360	58	17
1560-614-4740	43	4	1560-625-9361	58	27
1560-614-5134	165	63	1560-625-9363	74	17
1560-614-7954	123		1560-625-9363	75	30
1560-614-7956	123	5	1560-625-9365	76	
1560-618-2311	103	57	1560-625-9366	76	
1560-618-9274	39	21	1560-625-9370	78	35
1560-620-4118	46	81	1560-625-9372	78	32
1560-620-4119	46		1560-625-9373	A21	2
1560-620-4121	79	176	1560-626-1934	83A	12
1560-620-4121	80	116	1560-626-1976	154	
1560-620-4121	81	100	1560-626-1978	150	
1560-620-5410	165	35	1560-626-7234	115	49
1560-620-5413	16	78	1560-626-7259	118	115
1560-620-5609	177		1560-626-7260	119	6
1560-620-5614	26	32	1560-626-7261	119	9
1560-620-5617	178		1560-626-7272	145	55
1560-620-6052	19		1560-626-7273	79	152
1560-620-6744	177		1560-626-7273	80	125
1560-620-6929	43		1560-626-7273	81	108
1560-620-9527	123	8A	1560-626-7274	75	14
1560-622-4862	48	7	1560-626-7275	74	
1560-622-5048	162	9	1560-626-7277	75	6
1560-622-5320	162		1560-626-7286	122	
1560-622-6293	56	75	1560-626-7287	122	
1560-622-6293	65		1560-626-7289	116	2
1560-622-6358	169	60	1560-626-7290	119	43
1560-622-6359	170	31	1560-626-7292	118	28
1560-622-6369	177		1560-626-7294	118	138
1560-622-6403	104	12	1560-626-7383	173	
1560-622-6403	104	44	1560-626-7387	173	14
1560-623-1336	43		1560-626-8403	126	19
1560-623-1336	43	41	1560-626-8413	50	154
1560-623-1411	43	35	1560-627-2106	173	12
1560-623-1415	169	3	1560-627-2107	173	13
1560-623-5851	F1	12	1560-627-2111	173	11
1560-623-5864	57		1560-627-2114	74	2
1560-623-5865	57		1560-627-2153	126	21
1560-623-5867	154	65	1560-627-2157	32	193
1560-623-5869	169	25	1560-627-2157	144	129
1560-623-5869	169	32	1560-627-2157	145	179
1560-623-6190	122		1560-627-2158	145	16
1560-624-0175	K2		1560-627-2159	145	
1560-624-0175	41		1560-627-2160	145	158
1560-624-0175	KITS		1560-627-2161	145	155
1560-624-0175	MSUP		1560-627-2219	75	5
1560-624-1878	153	9	1560-627-3979	169	
1560-624-3151	177		1560-627-3981	169	
1560-624-3181	178	52	1560-627-8074	57	27
1560-624-6156	79	35	1560-628-0723	165	57
1560-624-6157	79	4	1560-628-3759	78	31
1560-624-6158	80	4	1560-628-3761	169	49
1560-624-6158	81	4	1560-628-5425	24	
1560-624-9997	74	58	1560-629-1595	F3	6
1560-624-9997	75	71	1560-629-4450	28	
1560-624-9998	74	48	1560-629-4603	50	239
1560-624-9998	75	61	1560-629-4603	50	242
1560-625-0000	74	51	1560-629-4603	50	245
1560-625-0000	75	64	1560-629-4603	50	45

STOCK NUMBER	FIGURE NUMBER	ITEM NUMBER	STOCK NUMBER	FIGURE NUMBER	ITEM NUMBER
1560-629-4603	132		1560-633-6943	31	
1560-629-9512	174	21	1560-633-6948	118	103
1560-629-9519	174	11	1560-633-6948	119	48
1560-629-9595	173	35	1560-633-6950	50	191
1560-630-0932	154		1560-633-6950	82	60
1560-630-0943	154		1560-633-6951	48	45
1560-630-9041	170	29	1560-633-6952	50	362
1560-630-9042	170	21	1560-633-6954	41	133
1560-630-9044	A22		1560-633-6955	41	129
1560-631-1074	182	13	1560-633-6959	50	237
1560-631-1553	181		1560-633-6960	132	149A
1560-631-3641	104	18	1560-633-6961	50	227
1560-631-3641	104	50	1560-633-6962	46	111
1560-631-3641	104	78	1560-633-6964	46	
1560-631-3641	104	94	1560-633-6967	41	113
1560-631-3701	25		1560-633-6968	41	
1560-631-5751	23	30	1560-633-6970	41	99
1560-631-5754	87	128	1560-633-6971	166	2
1560-631-5755	176	73	1560-633-6973	165	62
1560-632-0982	74	56	1560-633-6978	79	8
1560-632-0982	75	69	1560-633-6978	80	8
1560-632-0983	74		1560-633-6978	81	8
1560-632-0983	75		1560-633-6979	79	165
1560-632-2845	101	4	1560-633-6979	80	100
1560-632-2846	101	7	1560-633-6979	81	83
1560-632-2849	17		1560-633-6980	77	10
1560-632-4411	17	21	1560-633-8434	16	100
1560-632-4414	77	37	1560-633-8439	12	42
1560-632-4420	77		1560-633-8445	16	5
1560-632-4421	154	236	1560-633-8472	45	
1560-632-4427	43		1560-637-3400	36	27
1560-632-4432	132		1560-639-0582	46	88
1560-632-4546	55	58	1560-639-0588	156	8
1560-632-9104	49	1	1560-639-0591	156	7
1560-632-9105	49	8	1560-639-0595	178	
1560-633-0789	31	8	1560-639-0599	120	88
1560-633-0790	169	28A	1560-639-0599	120	90
1560-633-0790	169	44A	1560-639-0600	131	42
1560-633-0883	50	292	1560-639-0600	132	58
1560-633-0883	50	379	1560-639-0601	128	23
1560-633-0884	49	90	1560-639-5975	103	55
1560-633-0888	172	99	1560-650-1597	49	
1560-633-0890	75	7	1560-650-1598	49	
1560-633-1426	16	50	1560-650-1599	49	
1560-633-4387	90	14	1560-650-1600	49	
1560-633-4389	101	1	1560-650-1601	49	
1560-633-4390	91	30	1560-650-1602	49	
1560-633-4391	55	71	1560-650-1603	49	
1560-633-4391	56	86	1560-650-1604	49	
1560-633-4392	87	70	1560-650-1605	49	
1560-633-4393	87	40	1560-650-1606	49	
1560-633-4394	87	24	1560-650-1609	49	
1560-633-4395	87	64	1560-650-1610	49	
1560-633-4396	87	98	1560-650-1611	49	
1560-633-5137	169	7	1560-650-1612	49	
1560-633-6120	41		1560-650-1613	49	
1560-633-6120	43		1560-650-1635	49	
1560-633-6121	43		1560-650-7010	42	
1560-633-6127	82	59	1560-650-8590	21	35
1560-633-6128	41		1560-651-4142	49	
1560-633-6131	126	30	1560-651-4143	49	
1560-633-6132	50	156	1560-651-4144	49	
1560-633-6472	172	95	1560-651-4145	49	
1560-633-6474	74	21	1560-651-4153	43	54
1560-633-6474	75	34	1560-651-4154	43	76
1560-633-6770	49		1560-651-4155	43	61
1560-633-6771	49		1560-651-4156	43	94
1560-633-6936	169	8	1560-651-4157	43	
1560-633-6938	169	20	1560-651-4158	43	
1560-633-6939	169	84	1560-651-4159	43	
1560-633-6940	169	86	1560-651-4160	43	69

STOCK NUMBER	FIGURE NUMBER	ITEM NUMBER	STOCK NUMBER	FIGURE NUMBER	ITEM NUMBER
1560-651-7293	32	177	1560-662-6716	158	56
1560-651-8928	36	1	1560-662-6880	18	
1560-651-8929	36		1560-662-7077	17	41
1560-651-8930	36		1560-662-7077	17	47
1560-652-6400	94	13	1560-662-7079	25	
1560-652-9240	44	40	1560-662-7482	158	93
1560-652-9240	45		1560-662-7499	70	22
1560-653-0001	140	41	1560-662-7507	98	16
1560-653-0001	141	22	1560-662-7507	98	3
1560-653-4308	100		1560-662-7507	99	3
1560-653-4375	50		1560-662-7520	104	35
1560-653-4375	50	27	1560-662-7529	23	7
1560-653-5887	43	63	1560-662-7566	1 50	
1560-653-5888	106		1560-662-7733	1 65	15
1560-654-1391	11	45	1560-662-7803	128	26
1560-654-1393	50		1560-662-7930	158	91
1560-654-3164	44	32	1560-662-8018	15 8	27
1560-654-3176	46		1560-662-8088	2 5	
1560-654-3179	115	67	1560-662-8143	265	
1560-654-3179	120	56	1560-663-1579	50	104
1560-654-3180	122	43	1560-663-1579	50	141
1560-654-3181	176	14	1560-663-1630	105	25
1560-654-3181	176	17	1560-663-2854	156	
1560-654-8858	49		1560-663-2854	156	12
1560-654-8860	43	82	1560-663-2870	45	7
1560-654-8867	43		1560-663-2872	32	192
1560-654-8868	43	52	1560-663-2872	144	128
1560-654-8870	43	75	1560-663-2872	145	178
1560-654-8871	43	74	1560-663-2936	104	75
1560-654-8872	43	28	1560-663-2936	104	91
1560-654-8873	43	14	1560-663-2937	122	60
1560-654-8877	83	7	1560-663-2942	104	15
1560-654-8901	50	197	1560-663-2942	104	47
1560-656-9808	106		1560-663-2954	41	
1560-657-2858	115	54	1560-663-2966	39	9
1560-657-2903	80	136	1560-663-2973	42	12
1560-657-2903	81	119	1560-663-2973	42	22
1560-657-2905	41	108	1560-663-2985	45	8
1560-657-2911	169	73	1560-663-4461	80	36
1560-657-2912	88	2	1560-663-4461	80	45
1560-657-2924	44	1	1560-663-4461	81	25
1560-657-2926	58	4	1560-663-4461	81	34
1560-658-2899	83	28	1560-663-4462	79	13
1560-658-2902	24	16	1560-663-4462	79	229
1560-658-2902	25	95	1560-663-4462	79	41
1560-658-2903	172		1560-663-4462	80	1 3
1560-658-2903	172	100	1560-663-4462	80	244
1560-658-2908	41	94	1560-663-4462	81	131
1560-658-2924	100	8	1560-663-4463	76	44
1560-658-6199	180	6	1560-663-4463	76	44
1560-659-1110	25	97	1560-663-4465	76	35
1560-659-1110	30		1560-663-4465	76	74
1560-659-1114	29	10	1560-663-4465	79	58
1560-659-9192	50	41	1560-663-4465	79	71
1560-659-9197	17	40	1560-663-4465	80	90
1560-659-9199	106		1560-663-4465	81	73
1560-659-9200	50	8	1560-663-7068	74	
1560-659-9234	87	124	1560-663-8858	79	
1560-659-9237	79	72	1560-670-1669	158	6 1
1560-662-0894	30	2	1560-670-3024	170	4 2
1560-662-1558	15	7	1560-671-1926	162	6 3
1560-662-5499	20		1560-671-1927	162	
1560-662-5513	165	67	1560-671-1928	39	1 2
1560-662-5643	41	127	1560-671-4947	33	17
1560-662-5689	163	12	1560-671-5305	105	63
1560-662-5823	107	53	1560-671-5306	21	22
1560-662-5898	26	35	1560-671-5306	21	51
1560-662-6223	12		1560-671-5883	44	20
1560-662-6230	102	26	1560-671-5884	41	
1560-662-6464	23	36	1560-671-5912	177	
1560-662-6627	102	29	1560-671-5925	179	1

STOCK NUMBER	FIGURE NUMBER	ITEM NUMBER	STOCK NUMBER	FIGURE NUMBER	ITEM NUMBER
1560-671-5926	179		1560-675-1253	101	72
1560-672-0055	103	61	1560-675-3284	43	
1560-672-0056	115		1560-675-3285	43	49
1560-672-0057	145	23	1560-675-3286	101	57
1560-672-0058	145	9	1560-675-3287	122	9
1560-672-0059	104	2	1560-675-5768	150	34
1560-672-0060	50	186	1560-675-5769	44	22
1560-672-0061	50		1560-675-5770	44	24
1560-672-0062	50		1560-675-5776	49	73
1560-672-3531	145	22	1560-675-5777	49	
1560-672-3532	107	43	1560-675-5778	49	71
1560-672-3532	107	67	1560-675-5779	49	72
1560-672-3533	101	58	1560-675-5780	49	93
1560-672-3534	172	37	1560-675-5781	49	
1560-672-3534	172	82	1560-675-5782	49	99
1560-672-3539	44		1560-675-5783	49	102
1560-672-3540	26	1	1560-675-5784	49	105
1560-672-3549	42		1560-675-5785	49	108
1560-672-3559	122	30	1560-675-5786	49	
1560-672-3561	121	9	1560-675-5787	49	
1560-672-3564	25	16	1560-675-5788	49	117
1560-672-3564	28		1560-675-5789	49	120
1560-672-4050	177		1560-675-5790	115	57
1560-672-4809	145	3	1560-675-5793	154	87
1560-672-4810	113	34	1560-675-5802	117	11
1560-672-4810	114	54	1560-675-5802	118	50
1560-672-4811	101	96	1560-675-5804	107	1
1560-672-4812	101	95	1560-676-1663	174	15
1560-672-4816	21		1560-676-3428	49	
1560-672-4821	132		1560-676-3429	43	29
1560-672-4825	42	1	1560-676-3431	123	56
1560-672-5451	101	60	1560-677-9838	43	84
1560-672-5451	101	98	1560-679-2381	101	131
1560-672-7375	49		1560-679-2382	101	
1560-672-7376	50	346	1560-679-2601	49	
1560-672-7377	50	348	1560-679-8124	141	
1560-672-7386	169	91	1560-680-4123	21	8
1560-672-7387	101		1560-680-4182	21	9
1560-672-9446	169	81	1560-680-4183	21	47
1560-672-9447	169	82	1560-685-0665	16	
1560-672-9451	178		1560-691-4465	110	59
1560-672-9452	154	131	1560-691-4467	115	
1560-672-9453	48	19	1560-691-4469	131	54
1560-673-0265	96	29	1560-691-4469	132	78
1560-673-0293	138	54	1560-691-4470	137	
1560-673-0293	139	37	1560-691-4473	121	8
1560-673-0302	103	58	1560-692-2523	41	
1560-673-0306	31	39	1560-692-2609	11	39
1560-673-2050	123	80	1560-692-2614	87	34
1560-673-2051	115	23	1560-692-2627	87	
1560-673-2079	165	39	1560-693-8815	50	
1560-673-3813	172		1560-693-8818	125	8
1560-673-3813	172	106	1560-693-8819	74	
1560-673-3945	100		1560-693-8820	172	91
1560-673-7717	170		1560-693-8826	72	14
1560-673-7718	77	22	1560-693-8827	158	
1560-674-1173	48	5	1560-694-2473	21	
1560-674-1174	48		1560-694-4725	11	30
1560-674-1176	48	21	1560-694-4758	37	
1560-674-1179	78	44	1560-694-4760	23	
1560-674-1184	56	110	1560-694-4761	27	
1560-674-1186	78	45	1560-694-4764	25	
1560-674-1187	78	42	1560-694-4768	107	
1560-674-5490	56	55	1560-695-4909	41	
1560-674-5493	107	5	1560-695-4909	K2A	
1560-674-5494	87	17	1560-695-4909	KITS	
1560-674-5494	87	36	1560-697-0482	108	49
1560-674-6924	79	81	1560-697-0506	48	26
1560-674-6984	145	147	1560-697-8477	178	24
1560-675-1235	41		1560-698-5449	158	80
1560-675-1236	41	205A	1560-698-9812	24	28

STOCK NUMBER	FIGURE NUMBER	ITEM NUMBER	STOCK NUMBER	FIGURE NUMBER	ITEM NUMBER
1560-698-9812	24	31	1560-711-4585	49	
1560-699-0468	28		1560-711-4587	45	
1560-699-0469	28	13	1560-711-4589	45	
1560-699-4340	70	14	1560-711-4590	43	62
1560-699-4342	25		1560-714-0130	177	
1560-699-4366	76		1560-715-2242	28	
1560-699-4367	76	15	1560-715-2242	KITS	
1560-699-4368	76	11	1560-715-2256	38	
1560-699-4369	176	82	1560-715-2256	KITS	
1560-699-4370	176	80	1560-715-2258	158	
1560-699-4371	170		1560-715-2258	KITS	
1560-699-4374	82	25	1560-715-2259	158	
1560-699-4375	82		1560-715-2259	KITS	
1560-699-4378	91	26	1560-715-2260	157	
1560-699-4379	91	33	1560-715-2260	KITS	
1560-700-5326	171	3	1560-715-2261	157	
1560-700-5327	171	9	1560-715-2261	KITS	
1560-701-0561	43	86	1560-715-2262	22	
1560-701-2214	133	13	1560-715-2262	KITS	
1560-701-4705	84	43	1560-715-2263	22	
1560-701-4709	169	57	1560-715-2263	KITS	
1560-701-4709	169	59	1560-715-2267	100	
1560-701-4709	169	64	1560-715-2267	KITS	
1560-701-4709	169	66	1560-715-2268	100	
1560-701-4709	169	78	1560-715-2268	KITS	
1560-701-4709	169	80	1560-715-2269	103	
1560-701-4710	169	23	1560-715-2269	KITS	
1560-701-5726	110	9	1560-715-7864	122	
1560-701-5729	110	71	1560-715-7864	KITS	
1560-701-5729	111	81	1560-716-8508	154	29
1560-701-5735	110	41	1560-717-5841	103	32
1560-701-7528	110	37	1560-717-5841	103	46
1560-701-9198	108	47	1560-717-6922	178	40
1560-701-9198	108	51	1560-717-8179	94	
1560-701-9199	108		1560-717-8179	106	
1560-701-9955	115	56	1560-717-8180	106	
1560-703-8954	156	22	1560-724-3306	38	
1560-703-9639	171	1	1560-724-3306	KITS	
1560-703-9641	171	5	1560-731-7925	41	
1560-703-9642	171	7	1560-731-7925	123	
1560-705-0423	121	7	1560-733-2565	38	
1560-706-4486	87	55	1560-733-2565	KITS	
1560-706-4486	87	60	1560-757-4828	49	
1560-706-4497	41	70	1560-757-4829	49	
1560-706-9283	36		1560-757-4830	49	
1560-707-3313	79	49	1560-757-4831	49	
1560-707-3314	79	86	1560-757-4832	50	
1560-707-3315	77	42	1560-758-5697	154	165
1560-707-3316	77		1560-758-9955	37	
1560-707-3317	77	39	1560-765-7787	50	208
1560-707-3318	77	31	1560-765-7787	50	208
1560-707-3319	77	30	1560-765-7787	150	
1560-707-3320	76	7	1560-765-7903	25	19A
1560-707-3323	138	7	1560-765-8713	77	3
1560-707-3323	139	10	1560-765-9620	112	
1560-707-7806	87	52	1560-766-0924	42	
1560-708-0801	36		1560-766-1990	173	
1560-708-0869	150		1560-766-2014	43	
1560-708-0869	150	79	1560-766-2015	44	
1560-708-0869	150	79	1560-766-2016	50	
1560-708-2227	77	44	1560-766-2017	48	6A
1560-709-8617	12	4	1560-766-2018	50	
1560-709-8620	77		1560-766-3477	115	25
1560-709-8625	105	15	1560-766-4849	151	8
1560-710-6648	48	9	1560-766-6369	46	83
1560-711-4571	50	100	1560-766-8576	165	
1560-711-4571	50	137	1560-767-0452	87	1
1560-711-4581	48	34	1560-767-0452	87	38
1560-711-4582	49		1560-767-6417	144	21
1560-711-4583	49		1560-768-0331	150	
1560-711-4584	49		1560-768-2594	25	41

STOCK NUMBER	FIGURE NUMBER	ITEM NUMBER	STOCK NUMBER	FIGURE NUMBER	ITEM NUMBER
1560-768-3769	144	3	1560-830-5705	50	235
1560-768-3770	144	18	1560-830-5706	50	236
1560-768-3771	147	13	1560-831-7519	125A	112
1560-768-3772	144	22	1560-833-1632	67	20
1560-768-3773	144	28	1560-847-7492	37	
1560-768-3773	145	18	1560-847-7493	37	
1560-768-3774	144	5	1560-847-7495	169	45
1560-769-3118	112	31	1560-847-7497	169	46
1560-769-3118	112	40	1560-851-2220	178	15
1560-769-3118	112	51	1560-854-9080	50	
1560-769-3128	144	17	1560-856-0197	154	13
1560-769-3129	144	15	1560-856-9222	MSUP	
1560-769-3130	144	9	1560-857-3307	41	
1560-769-3132	144	24	1560-858-5937	177	
1560-770-3444	107	101	1560-862-5551	178	59
1560-770-3444	107	45	1560-862-5552	178	61
1560-770-3444	107	69	1560-864-3475	43	
1560-770-3444	107	97	1560-866-6006	122	
1560-771-5664	44	36	1560-866-6035	154	166
1560-772-1874	F2		1560-866-6082	56	19
1560-772-5447	157		1560-866-6083	56	39
1560-772-5540	150		1560-866-6084	169	
1560-772-5541	154		1560-866-6085	169	48
1560-772-5542	42		1560-866-6086	169	47
1560-773-2318	A1		1560-866-9483	21	11
1560-774-5030	130	8	1560-866-9483	21	13
1560-774-9505	115		1560-867-1140	56	21
1560-775-5956	177		1560-868-6963	56	57
1560-779-2463	50		1560-868-6964	56	60
1560-780-1117	50	224	1560-868-9786	113	
1560-780-4363	85	19A	1560-868-9786	114	
1560-780-4364	85	62	1560-869-0699	43	
1560-783-4796	20	2	1560-869-2422	50	
1560-783-5231	77	28	1560-869-8160	41	77
1560-783-5232	96	27	1560-874-7389	107	63
1560-785-6773	50		1560-876-9665	177	6
1560-785-6774	50		1560-876-9665	179	
1560-787-2435	87	57	1560-876-9887	179	21
1560-787-2436	104	71	1560-879-2479	150	29
1560-787-2436	104	87	1560-879-2480	154	
1560-790-3645	172	4	1560-879-6675	50	89
1560-790-3645	172	42	1560-880-8754	13	
1560-790-3645	172	44	1560-880-8754	14	14
1560-792-6392	55	97	1560-883-1699	80	72
1560-792-6403	A5	2	1560-883-1699	81	55
1560-792-6464	75	12	1560-886-5981	100	20
1560-795-1901	79	174	1560-886-5981	106	72
1560-795-1901	80	115	1560-894-0455	112	57
1560-795-1901	81	98	1560-901-1827	109	27
1560-795-2786	21	2	1560-904-5111	43	
1560-796-1283	A6		1560-904-5117	43	74E
1560-798-3630	115	66	1560-905-2104	45	25
1560-798-3630	120	55	1560-905-5114	43	74F
1560-798-3634	79	11	1560-908-6774	42	
1560-798-3634	79	27	1560-909-7441	43	74D
1560-798-3634	79	39	1560-918-0689	41	
1560-798-3634	80	11	1560-918-0689	43	
1560-798-3634	80	23	1560-918-0690	41	112
1560-798-3634	81	11	1560-918-0690	43	
1560-802-2698	82	87	1560-918-1911	79	110
1560-804-2456	50	318	1560-918-1911	79	121
1560-805-4884	50		1560-918-3062	56	61
1560-805-4891	25	46	1560-918-3063	56	58
1560-805-4908	118	99	1560-919-7315	50	
1560-805-4908	119		1560-919-9988	57	20
1560-805-5105	150	31	1560-922-8287	152	18
1560-823-5983	169	62	1560-923-4349	115	100
1560-823-5986	117		1560-923-4350	115	
1560-823-5986	118	51	1560-924-0383	144	126
1560-823-5986	118	61	1560-924-0383	145	176
1560-830-4300	176	9	1560-924-7150	41	71

STOCK NUMBER	FIGURE NUMBER	ITEM NUMBER	STOCK NUMBER	FIGURE NUMBER	ITEM NUMBER
1560-931-2276	150	59	1610-212-8722	177	4
1560-931-2305	130	78	1610-326-0627	114F	
1560-932-5121	109	22	1610-326-0628	114F	
1560-932-5122	109	24	1610-628-7104	29	4
1560-936-5527	93	35	1610-862-4872	114G	
1560-939-7619	41	134	1610-862-4872	114G	54
1560-940-0343	145	14	1615-014-2032	37	4
1560-942-2248	45		1615-024-4974	11	18
1560-943-0761	46		1615-034-6179	82	51
1560-944-4873	57	21	1615-034-6179	82	75
1560-946-2146	74	3	1615-034-6179	82	9
1560-947-3520	150	11	1615-034-6179	151	12
1560-948-0437	42		1615-034-6179	155	10
1560-948-0438	173	42	1615-034-6179	155	26
1560-949-5466	49		1615-062-9520	154	
1560-956-2944	49	96	1615-065-2055	16	
1560-956-2945	42	48	1615-070-2692	21	32
1560-960-0433	42		1615-070-2692	21	61
1560-960-8903	172	47	1615-083-6217	177	2
1560-960-8903	172	87	1615-083-6217	178	
1560-961-1722	154	121	1615-083-6756	178	71
1560-962-0109	45	63	1615-083-6758	178	42
1560-968-4667	50		1615-083-6759	178	16
1560-969-9215	154		1615-083-6760	178	55
1560-972-0255	154		1615-091-3820	12	
1560-972-0258	50		1615-091-3829	25	
1560-974-9852	103		1615-091-3860	12	
1560-975-9387	120		1615-092-5538	12	
1560-979-7500	50		1615-092-5539	12	73
1560-980-9424	50		1615-098-8279	26	29
1560-981-1297	42		1615-098-8284	158	
1560-981-1298	45	15A	1615-203-6358	25	71
1560-981-1731	154	64	1615-203-6359	25	57
1560-981-3029	49		1615-203-6360	25	76
1560-981-8730	41	6	1615-203-6360	25	78
1560-981-8731	41		1615-209-2411	158	67
1560-981-8732	41	5	1615-209-2761	157	17
1560-981-8733	44	26	1615-209-2761	157	46
1560-983-0496	49		1615-251-9685	19	
1560-983-2485	158		1615-285-6634	12	27
1560-986-0385	50		1615-286-9597	158	84
1560-986-0389	50		1615-301-3545	37	1
1560-987-3296	150	95	1615-302-3445	12	74
1560-987-3311	178		1615-302-3446	19	
1560-987-3314	44	30	1615-302-3448	21	
1560-987-3327	50	47	1615-302-3451	21	
1560-987-3335	151		1615-303-2490	12	19
1560-987-8924	50		1615-303-2491	16	
1560-987-8925	50		1615-303-2492	16	17
1560-987-8926	50		1615-303-2496	20	
1560-987-8927	50		1615-303-2498	16	
1560-987-8928	50		1615-303-2501	20	8
1560-987-8929	50		1615-303-2502	18	
1560-987-8930	50		1615-303-2505	19	
1560-987-8931	50		1615-303-2506	18	
1560-990-1334	158	10	1615-303-2510	19	9A
1560-991-0352	122		1615-303-2511	21	
1560-991-0387	82	15	1615-303-2512	21	
1560-991-0387	155	14	1615-303-2514	21	
1560-991-0433	154		1615-303-2518	16	
1560-991-0815	44	28	1615-303-2520	14	
1560-991-3246	49		1615-303-2521	14	
1560-991-8961	122	34	1615-303-2522	21	15
1560-991-8964	122	40	1615-303-2528	15	3
1560-992-0538	118	24	1615-303-2532	17	
1560-992-2519	154		1615-303-2534	17	
1560-994-9483	225		1615-303-2544	27	
1560-996-0850	45	12	1615-303-2550	27	6
1560-996-2178	154	126	1615-303-2567	29	7
1560-997-6296	46	78	1615-303-2571	26	15
1610-097-4286	187	5	1615-303-8591	155	

STOCK NUMBER	FIGURE NUMBER	ITEM NUMBER	STOCK NUMBER	FIGURE NUMBER	ITEM NUMBER
1615-304-4582	19		1615-334-6364	82	
1615-304-4597	16		1615-334-6364	155	
1615-304-4603	15	4	1615-339-9573	179	17
1615-304-4603	120	27	1615-340-0165	19	29
1615-304-4603	120	72	1615-340-0168	16	71
1615-304-4617	24	27	1615-340-0169	37	12
1615-304-4621	155	4	1615-340-1357	16	
1615-304-4622	156	19	1615-340-2044	16	10
1615-304-4623	156		1615-340-2123	103	37
1615-304-4628	157	44	1615-340-2123	103	44
1615-304-4630	157	36	1615-343-4332	103	17
1615-305-1661	178		1615-343-9182	103	21
1615-305-4156	82	34	1615-346-1157	12	
1615-305-4174	178	2	1615-346-1165	18	
1615-305-4180	183	4	1615-346-1166	37	
1615-305-4181	183	5	1615-346-1167	16	48
1615-305-4182	183	6	1615-397-1385	15	1
1615-305-4183	87		1615-486-6957	19	25
1615-306-4447	183	10	1615-508-6864	38	53
1615-307-3607	18		1615-508-6867	38	60
1615-307-3609	19		1615-508-6868	38	61
1615-307-3610	19	8	1615-508-6870	38	
1615-307-3611	18		1615-508-6950	14	
1615-307-3612	21		1615-509-0495	25	22
1615-307-3613	13		1615-510-4097	105	37
1615-307-3614	14		1615-511-9516	16	72
1615-307-3620	38	34	1615-511-9517	37	
1615-307-3641	24	19	1615-511-9518	14	
1615-307-3656	158	12	1615-511-9519	11	
1615-307-3659	158	34	1615-511-9520	25	34
1615-307-3661	158	9	1615-516-2323	13	
1615-307-3667	158		1615-516-2323	14	12
1615-307-3673	157	21	1615-517-0216	18	29
1615-307-3673	157	38	1615-517-9137	24	24
1615-308-0166	183		1615-517-9145	13	6
1615-308-3536	158	44	1615-517-9150	14	
1615-310-1418	82		1615-517-9150	14	4
1615-310-1419	82		1615-517-9368	24	26
1615-310-1422	183	1	1615-517-9368	24	8
1615-310-5373	24	3	1615-520-6300	12	30
1615-313-0543	25	18	1615-520-6302	12	31
1615-315-0897	158	11	1615-522-8895	38	30
1615-315-6333	24	29	1615-522-8896	82	
1615-317-0850	25	58	1615-526-9384	25	
1615-317-0851	23	26	1615-527-6289	26	4
1615-323-4352	15		1615-527-7067	178	
1615-323-4356	18	25	1615-528-0755	25	
1615-326-3400	12		1615-528-5367	14	15
1615-326-3401	20	14	1615-529-9381	16	
1615-326-3405	13		1615-529-9954	14	5
1615-326-3409	17	36A	1615-529-9960	16	12
1615-326-3460	154	137	1615-532-2327	21	45
1615-326-3493	156	24	1615-533-0282	19	22
1615-326-3494	82	17	1615-534-2051	12	
1615-326-3494	82	47	1615-536-3054	12	51
1615-326-3494	82	8	1615-536-7335	19	13
1615-326-3494	82	89	1615-543-3114	12	50
1615-326-3494	155	16	1615-543-3114	12	50
1615-326-3494	155	37	1615-551-7054	82	48
1615-326-3494	155	5	1615-554-1089	26	9
1615-326-3495	82		1615-554-6329	13	11
1615-326-3495	155		1615-559-1094	16	
1615-327-3817	25		1615-559-4758	178	3
1615-327-3911	25		1615-560-5348	38	
1615-328-4832	155		1615-560-5397	31	4
1615-330-6173	12		1615-563-6713	16	
1615-332-3511	16		1615-563-9771	16	8
1615-332-3512	20		1615-563-9818	16	31
1615-332-3545	25	86	1615-563-9820	16	88
1615-332-3547	155		1615-563-9832	12	28
1615-333-7047	155		1615-563-9834	16	6

STOCK NUMBER	FIGURE NUMBER	ITEM NUMBER	STOCK NUMBER	FIGURE NUMBER	ITEM NUMBER
1615-563-9838	38	43	1615-591-6686	19	31
1615-563-9940	11	13	1615-591-6687	19	33
1615-563-9943	82		1615-591-6693	21	62
1615-563-9944	82	45	1615-591-6694	21	64
1615-563-9950	182		1615-591-6728	16	52
1615-564-1498	12	37	1615-591-6729	16	87
1615-564-1499	16		1615-591-6732	16	
1615-564-1502	16	3	1615-591-6737	20	6
1615-564-1502	16	3	1615-591-6738	16	
1615-564-1513	25		1615-591-6740	16	51
1615-564-1513	30		1615-591-6799	37	10
1615-564-5718	172	21	1615-591-9708	178	
1615-564-5718	178	37	1615-592-0608	14	
1615-565-5596	37	14	1615-600-3285	18	28
1615-565-5597	37	16	1615-600-3459	13	
1615-565-5599	37	7	1615-600-3460	13	
1615-565-5600	37	39	1615-600-3462	14	
1615-565-5601	37		1615-600-6148	16	
1615-565-5602	37		1615-601-0342	11	
1615-567-1087	12	18	1615-601-0581	25	47
1615-567-1113	82	40	1615-603-1332	103	59
1615-568-3825	12	25	1615-604-0952	26	19
1615-568-3826	12		1615-606-8364	178	51
1615-568-3827	12	26	1615-607-8802	12	68
1615-568-7717	12		1615-608-0700	158	29
1615-569-6105	25		1615-608-1120	36	20
1615-570-2344	21	10	1615-609-3034	11	
1615-570-9766	25	43	1615-611-3886	11	1
1615-570-9766	29		1615-611-3886	12	
1615-574-6392	17	26	1615-611-5910	19	30
1615-574-6394	12		1615-611-6552	11	
1615-574-8023	37	11	1615-611-6553	25	53
1615-574-8023	37	13	1615-611-6554	25	20
1615-574-8023	37	15	1615-611-6557	25	50
1615-574-8024	37	9	1615-611-7268	159	35
1615-574-8026	37		1615-613-0959	87	118
1615-575-2001	16	2	1615-613-1298	37	33
1615-575-2001	16	2	1615-613-3061	25	
1615-576-3547	27	9	1615-613-3216	16	56
1615-576-8120	16		1615-613-3217	18	27
1615-576-8120	16	102	1615-614-1754	178	26
1615-576-9134	13	5	1615-614-1755	178	
1615-576-9134	14		1615-614-5138	24	6
1615-576-9135	12	41	1615-618-2531	178	56
1615-576-9142	19	34	1615-618-6374	17	44
1615-576-9143	19	35	1615-618-6374	17	45
1615-576-9144	19	37	1615-619-6721	16	99
1615-576-9145	19	38	1615-619-6722	19	36
1615-586-6817	A16		1615-619-6726	21	37
1615-587-6365	12		1615-619-6727	16	49
1615-587-6371	38	32	1615-620-4117	38	36
1615-587-6385	155	40	1615-620-4502	38	37
1615-587-6385	158		1615-620-4505	27	18
1615-587-6385	158	52	1615-620-4506	82	
1615-588-3511	103	12	1615-620-4506	155	
1615-589-8446	101	41	1615-620-5408	114	3
1615-589-8446	103		1615-620-5608	11	
1615-591-6561	103	39	1615-620-5616	178	39
1615-591-6562	103	31	1615-620-6051	16	37
1615-591-6566	103	50	1615-620-6054	13	3
1615-591-6567	103		1615-622-3846	178	49
1615-591-6612	21	43	1615-624-3174	16	45
1615-591-6614	13	13	1615-624-3175	16	94
1615-591-6614	14		1615-624-3179	178	46
1615-591-6619	14	7	1615-625-0150	13	8
1615-591-6619	14	8	1615-626-8401	182	11
1615-591-6620	14	6	1615-626-8402	182	4
1615-591-6621	12	69	1615-626-8454	82	65
1615-591-6625	12		1615-626-8454	82	69
1615-591-6667	158	71	1615-626-8454	151	4
1615-591-6683	16		1615-627-2034	16	13

STOCK NUMBER	FIGURE NUMBER	ITEM NUMBER	STOCK NUMBER	FIGURE NUMBER	ITEM NUMBER
1615-627-2034	17		1615-941-5600	178	21
1615-627-2042	14	10	1615-944-2543	17	
1615-628-5251	25	24	1615-944-2543	KITS	
1615-628-5396	38	26	1615-944-4900	21	34
1615-629-4613	31	34	1615-960-3926	14	9
1615-629-4614	31	24	1615-977-9286	38	
1615-629-4615	31		1615-978-2150	16	
1615-629-4618	31	33	1615-978-5911	12	36
1615-629-4619	31	32	1615-980-9397	19	6
1615-630-9367	21	63	1615-981-6913	19	9
1615-632-2848	12		1615-987-1384	21	7
1615-633-0457	16	98	1615-991-0383	82	71
1615-633-6122	37	5	1615-994-4287	27	16
1615-633-8423	12		1620-091-3982	165	
1615-633-8425	19		1620-098-1567	165	66
1615-639-0586	31	1	1620-302-9077	164	15
1615-639-0593	178	8	1620-302-9078	164	14
1615-650-8589	17	20	1620-302-9079	164	7
1615-651-2333	18	3	1620-306-4442	164	5
1615-651-7294	A10	3	1620-307-3571	165	41
1615-652-6918	11		1620-307-3629	165	32
1615-652-6918	11	40	1620-307-3631	165	44
1615-653-5864	25	19	1620-346-1171	162	
1615-658-9520	11	48	1620-373-7043	165	29
1615-658-9520	22		1620-516-8242	164	
1615-659-9196	12		1620-525-1497	164	1
1615-662-5605	13	4	1620-564-1509	166	5
1615-662-6462	23	37	1620-571-3674	162	
1615-662-6735	26		1620-591-6765	162	35
1615-662-7233	13	10	1620-591-8323	162	
1615-663-2851	178		1620-591-8324	162	
1615-671-1773	155	38	1620-608-0699	165	42
1615-671-1773	157		1620-628-3844	165	37
1615-671-1929	16	62	1620-629-1597	164	
1615-672-7374	25	81	1620-654-1478	162	
1615-673-3028	12	20	1620-657-2957	162	
1615-676-2266	12	76	1620-662-4004	165	68
1615-676-2266	21		1620-662-4856	164	10
1615-680-4181	16	70	1620-671-5895	163	5
1615-680-4181	21	3	1620-674-6936	162	
1615-697-8475	82		1620-674-6937	162	
1615-698-5430	37	30	1620-675-1256	57	31
1615-701-4158	158	94	1620-692-2624	165	19
1615-703-8950	25		1620-692-2624	165	22
1615-703-8950	29		1620-694-8565	68	4
1615-706-1039	25	19B	1620-694-8565	68	6
1615-706-1039	25	27	1620-713-1373	163	1
1615-706-5733	14		1620-715-2264	166	
1615-706-5755	12		1620-715-2265	166	
1615-707-3312	14	16	1620-775-5970	56	100
1615-709-8616	12	5	1620-775-5970	73	
1615-709-8618	17	36	1620-777-0011	KITS	
1615-715-2252	12		1620-777-0011	104A	
1615-715-2252	KITS		1620-831-7078	164	6
1615-715-2590	15	6	1620-953-2354	166	
1615-715-8739	17		1620-953-2354	KITS	
1615-715-8739	KITS		1620-974-7729	164	
1615-733-2563	12		1620-987-1359	164	
1615-733-2563	KITS		1620-987-1359	KITS	
1615-765-9621	178	64	1620-996-3909	166	
1615-766-8573	154		1620-996-3909	KITS	
1615-767-0450	A10	2	1630-028-0846	82	
1615-789-7819	37	29	1630-028-0846	84B	
1615-798-9009	18	9	1630-028-0859	104	29
1615-820-3355	11		1630-028-0859	104	61
1615-847-7491	37		1630-028-0859	104A	
1615-847-7494	37		1630-031-4394	162A	
1615-861-3853	12	54	1630-047-2404	162A	1
1615-886-5986	155		1630-065-8727	85B	19
1615-893-0158	11		1630-094-3010	84B	14
1615-923-0580	178		1630-182-6129	84A	7

STOCK NUMBER	FIGURE NUMBER	ITEM NUMBER	STOCK NUMBER	FIGURE NUMBER	ITEM NUMBER
1630-182-6129	84B	10	1630-650-4757	85B	31
1630-182-6129	162A	7	1630-654-3202	85	
1630-218-8708	165		1630-659-1602	104	
1630-218-8840	162B	4	1630-663-2923	54	58
1630-302-9080	165	71	1630-674-9552	90	
1630-305-0408	162	48	1630-676-5116	85	
1630-307-3630	165	52	1630-692-3171	84B	15
1630-307-3632	166	14	1630-694-7347	165	34
1630-307-3635	166	7	1630-707-6864	84A	
1630-310-1413	163	13	1630-707-6864	KITS	
1630-310-1414	163	10	1630-713-1372	166	1
1630-315-4825	82		1630-732-1763	90	
1630-320-7155	104A	39	1630-732-1763	KITS	
1630-330-7840	163	2	1630-733-8381	85B	
1630-332-5739	84B	16	1630-733-8381	KITS	
1630-341-7131	104A	18	1630-733-8382	85B	
1630-341-7132	104A	6	1630-733-8382	KITS	
1630-341-7133	104A	17	1630-765-5507	90	
1630-341-7134	104A	37	1630-766-3488	54	11
1630-341-7138	104A	43	1630-766-3492	75	3
1630-341-7139	104A	33	1630-775-1810	165	28
1630-341-7140	104A	35	1630-778-2232	KITS	
1630-341-7141	104A	29	1630-778-2232	104A	
1630-341-7142	104A	9	1630-778-2972	90	
1630-341-7146	104A	19	1630-778-2972	KITS	
1630-341-7147	104A	15	1630-785-3637	90	
1630-343-4614	104A	45	1630-785-3637	90A	
1630-347-7132	166	10	1630-785-3637	KITS	
1630-370-7266	162	42	1630-785-5200	162A	23
1630-370-7266	162A		1630-793-2053	90	
1630-394-1581	162A	10	1630-865-8075	84A	26
1630-394-1587	162A	4	1630-898-0056	84A	27
1630-436-9900	84B	13	1630-898-0056	84B	3
1630-436-9911	162B		1630-898-0056	84B	4
1630-483-7959	84A	23	1630-955-9605	85	
1630-483-7959	84B	25	1630-981-3073	KITS	
1630-483-7959	162A	18	1630-981-3073	162A	
1630-505-9659	84B	17	1630-992-4590	85B	9
1630-507-1397	85		1630-992-4592	85B	32
1630-507-1418	84B	2	1630-992-4593	85B	40
1630-516-6682	162	38	1630-992-4594	85B	18
1630-516-6682	162B		1630-992-4595	85B	15
1630-516-8438	84A	22	1650-024-9665	34	10
1630-516-8438	84B	24	1650-024-9665	149	11
1630-516-8438	162A	17	1650-031-5686	85	
1630-517-8958	162		1650-095-1936	35A	17
1630-520-6311	165	60	1650-095-1996	35A	15
1630-529-8501	163	6	1650-095-4146	181A	25
1630-534-6578	162A	2	1650-096-5347	100	60
1630-545-9435	85B	20	1650-096-5348	100	40
1630-554-2557	162	33	1650-096-5349	100	51
1630-562-5053	54		1650-096-5350	100	30
1630-562-5053	54	61	1650-096-5351	100	
1630-569-2559	165	49	1650-096-5352	100	
1630-571-9098	165		1650-096-5354	100	64
1630-573-6563	82	31	1650-096-5355	100	5
1630-573-6563	84A	28	1650-096-5356	92	20
1630-573-6563	84B	1	1650-096-5357	92	19
1630-589-4153	85	6	1650-096-5358	94	
1630-589-4153	85B		1650-098-2011	172	
1630-589-4157	90		1650-166-5921	181A	40
1630-593-3882	54		1650-166-5929	181A	39
1630-622-6235	84A	5	1650-166-5931	181A	42
1630-624-3430	82	32	1650-167-4891	125B	30
1630-624-3430	83	34	1650-167-4892	125B	26
1630-624-3430	84	14	1650-180-6055	125B	12
1630-624-3430	84A		1650-203-6321	76	30
1630-631-3760	90		1650-203-6321	76	69
1630-631-3760	90A		1650-203-9958	32	
1630-633-6986	165	40	1650-203-9958	181A	
1630-641-5807	162	34	1650-204-1688	32	

STOCK NUMBER	FIGURE NUMBER	ITEM NUMBER	STOCK NUMBER	FIGURE NUMBER	ITEM NUMBER
1650-204-1688	181A		1650-394-0156	34	23
1650-289-8605	32	174	1650-394-0156	149	24
1650-289-8605	181	30	1650-397-5788	35A	11
1650-289-8605	181A		1650-397-5791	35A	23
1650-294-1367	164	13	1650-397-5903	124	
1650-302-3433	96	77	1650-397-5924	181A	35
1650-302-3435	96	37	1650-439-1140	35	31
1650-302-3436	96	119	1650-439-1140	35A	
1650-302-9076	16		1650-474-4752	125B	31
1650-302-9085	100	6	1650-474-4754	125B	20
1650-302-9086	100	21	1650-474-4755	125B	28
1650-302-9086	106	73	1650-486-2773	80	
1650-302-9087	98	4	1650-486-4279	125B	21
1650-302-9087	99		1650-507-0184	94	1
1650-302-9088	98		1650-507-1447	103	3
1650-302-9088	98	17	1650-510-2048	34	11
1650-302-9088	99		1650-510-2048	149	1
1650-302-9093	96	108	1650-513-4031	106	
1650-302-9095	106		1650-513-5225	175E	27
1650-302-9099	106	136	1650-515-9436	125B	10
1650-302-9100	106		1650-516-1248	97	32
1650-305-4146	16		1650-516-1251	97	34
1650-305-4147	16		1650-516-1267	100	11
1650-305-4514	106	109	1650-521-3838	100	65
1650-305-4515	106	104	1650-522-9003	32	49
1650-305-4515	106	94	1650-523-4941	49	
1650-305-4516	106		1650-523-4942	100	66
1650-305-4517	106	32	1650-526-9717	125B	29
1650-305-4522	106	131	1650-527-6584	34	8
1650-306-4437	92	13	1650-527-6584	149	9
1650-306-4441	92	22	1650-528-2386	113	16
1650-310-1423	93	43	1650-528-2386	114	8
1650-310-1425	98		1650-529-1169	33	31
1650-310-1426	98	11	1650-529-1169	147	20
1650-310-1429	106		1650-529-1169	148	29
1650-315-6384	100		1650-529-3225	35	20
1650-321-1760	106		1650-530-2938	34	16
1650-322-5184	181A		1650-530-2938	149	13
1650-322-5194	181A		1650-531-9878	92	21
1650-322-5205	181A	15	1650-532-6637	91	
1650-323-4929	106		1650-534-4084	12	52
1650-323-4930	106		1650-534-4095	12	
1650-323-4931	106		1650-534-4147	32	202
1650-323-4932	96	91	1650-540-0170	125A	1
1650-326-0607	124		1650-540-0170	125B	
1650-328-3442	181A	13	1650-540-4106	35	23
1650-332-6818	181A	63	1650-540-4108	33	36
1650-332-7207	98		1650-540-4108	147	27
1650-332-7208	91		1650-540-4108	148	20
1650-333-7993	34	32	1650-564-1501	17	38
1650-333-8084	181A	47	1650-564-1581	91	1
1650-340-0893	181A	33	1650-564-1581	92	
1650-340-0896	181A	31	1650-565-8502	96	95
1650-341-9773	96	146	1650-565-8503	97	53
1650-341-9774	96	93	1650-566-2428	106	127
1650-341-9777	94		1650-566-2451	106	
1650-341-9780	94	21	1650-567-1086	34	19
1650-342-0495	181A	62	1650-567-1086	149	16
1650-343-4337	103		1650-567-6933	105	18
1650-343-4345	95	13	1650-567-6935	106	
1650-343-4347	95	2	1650-567-7244	35	
1650-343-4371	34	15	1650-567-7244	35A	5
1650-343-4371	149	5	1650-570-0579	34	
1650-343-5605	113C	45	1650-570-0579	149	35
1650-343-5652	144	26	1650-572-6999	106	35
1650-343-5652	145	21	1650-573-7437	99	
1650-347-1490	181A	48	1650-573-7438	99	8
1650-348-2020	181A	43	1650-587-2211	125B	17
1650-348-2023	181A	71	1650-595-4219	32	58
1650-348-3688	96	94	1650-595-4219	32	99
1650-382-0325	35A	29	1650-600-2131	181A	

STOCK NUMBER	FIGURE NUMBER	ITEM NUMBER	STOCK NUMBER	FIGURE NUMBER	ITEM NUMBER
1650-601-5607	181A		1650-862-5553	96	113
1650-601-5607	181A	41	1650-937-4110	106	69
1650-604-8216	96		1650-996-2125	96	89
1650-613-1010	94		1660-054-3575	123	
1650-621-0573	181A	28	1660-075-1897	123	
1650-627-8104	105	43	1660-166-5509	123	
1650-627-8104	106		1660-166-5511	123	
1650-630-3665	132	43	1660-167-1421	124	
1650-633-8513	34	22	1660-167-2613	123	
1650-633-8513	148	35	1660-308-1052	123	75
1650-639-6257	33		1660-308-1052	123A	
1650-640-8538	166	13	1660-347-5520	83A	10
1650-640-8541	100	54	1660-347-8239	123A	33
1650-640-8557	162	65	1660-449-1415	123	
1650-651-4200	32	200	1660-485-4091	123	
1650-651-4201	32	198	1660-509-4435	124	
1650-651-4638	125B	23	1660-509-4435	124	59
1650-654-1457	91	35	1660-510-2418	123	67
1650-654-1457	94		1660-516-6493	123	
1650-656-4462	106		1660-529-5487	124	79
1650-656-4463	106		1660-532-3698	150	64
1650-656-4464	106	61	1660-533-2411	123	57
1650-656-4464	106	61	1660-534-6999	123A	43
1650-662-3599	96	120	1660-534-7000	123A	2
1650-662-3600	96	73	1660-534-7001	123A	5
1650-662-3600	96	74	1660-535-8761	74	
1650-662-4285	17		1660-566-2548	123A	
1650-662-4941	97	54	1660-572-5429	123	81
1650-662-7106	181A	52	1660-572-5429	123	83
1650-663-3440	103	33	1660-587-6386	123	85
1650-663-3440	103	45	1660-587-6399	123	76
1650-663-4826	125B	35	1660-591-4265	84	
1650-671-1923	100	14	1660-591-4265	83A	3
1650-672-4829	98	13	1660-591-4266	83A	6
1650-672-4829	98	26	1660-592-8295	123	
1650-672-4829	99	12	1660-592-8296	123	
1650-672-4829	100		1660-608-4664	123A	11
1650-672-7943	35A		1660-626-4774	123	60
1650-672-7943	KITS		1660-633-6143	123	82
1650-673-3946	100	9	1660-639-0616	123	11
1650-673-6998	181A	36	1660-699-0226	123B	18
1650-675-2669	181A	60	1660-716-3441	KITS	
1650-684-0733	165		1660-716-3441	123A	
1650-685-1136	85	26	1660-897-9985	123	88
1650-690-2039	35A		1670-180-5309	49	56
1650-690-2039	KITS		1670-180-5309	49	61
1650-692-2330	100	44	1670-180-5309	49	74
1650-692-2524	34	30	1670-180-5309	49	77
1650-692-2524	149	29	1670-180-5309	49	80
1650-692-2633	98	24	1670-360-0551	115	70
1650-692-2635	105	53	1670-360-0551	115	79
1650-694-4669	34	7	1670-640-8852	115	
1650-694-4669	149	8	1680-024-6240	44B	25
1650-699-4380	96	92	1680-031-5319	44A	
1650-701-2240	34	35	1680-062-9521	120	29
1650-704-8551	181A		1680-062-9521	120	31
1650-715-2243	17		1680-062-9521	120	36
1650-715-2266	149		1680-062-9521	120	37
1650-715-2266	KITS		1680-062-9521	120	39
1650-715-2270	92		1680-062-9521	120	41
1650-715-2270	KITS		1680-062-9521	120	43
1650-717-2361	KITS		1680-062-9521	120	74
1650-717-2361	181A		1680-062-9521	120	76
1650-717-2362	KITS		1680-062-9521	120	81
1650-717-2362	181A		1680-062-9521	120	82
1650-719-7688	181A	12	1680-062-9521	120	84
1650-731-8902	146	4	1680-062-9521	120	86
1650-787-4289	96	15	1680-087-0296	117	
1650-803-6399	105	45A	1680-087-0296	118	
1650-803-6399	106		1680-300-3068	136	53
1650-859-2756	106		1680-303-8603	44A	8

STOCK NUMBER	FIGURE NUMBER	ITEM NUMBER	STOCK NUMBER	FIGURE NUMBER	ITEM NUMBER
1680-303-8604	44A	9	1680-560-0681	125A	14
1680-304-4627	157		1680-560-6399	125	
1680-305-4166	177		1680-560-6402	125A	97
1680-309-4708	116		1680-560-6403	125A	12
1680-315-4079	123	24	1680-560-6404	125A	85
1680-315-4080	123		1680-560-6405	125A	46
1680-315-5806	118		1680-560-6406	125A	56
1680-321-1908	44A	11	1680-560-6407	125A	113
1680-321-1908	44B		1680-560-6408	125A	52
1680-326-4470	44B	17	1680-560-6409	125A	110
1680-328-1690	44B	18	1680-560-6410	125A	
1680-332-4941	122	58	1680-560-6411	125A	133
1680-346-4003	90A	34	1680-560-6413	125A	148
1680-346-4004	90A	31	1680-560-6415	125A	141
1680-346-4005	90A	32	1680-560-6416	125A	132
1680-347-3431	107	60	1680-560-6418	125A	149
1680-347-7946	90A	22	1680-560-6419	125A	103
1680-416-2499	KITS		1680-560-6420	125A	96
1680-416-2499	125A		1680-560-6421	125A	94
1680-416-2500	KITS		1680-560-6422	125A	137
1680-416-2500	125A		1680-560-6424	125A	43
1680-439-8648	119	1	1680-560-6425	125A	150
1680-439-8648	119	1	1680-560-6426	125A	130
1680-446-7580	120		1680-560-6428	125A	120
1680-447-9504	117	1	1680-560-6429	125A	66
1680-447-9504	118	1	1680-560-6430	125A	57
1680-476-1396	139		1680-560-6434	125A	7
1680-485-2834	115		1680-560-6439	125A	125
1680-485-2934	115	32	1680-560-6440	125A	83
1680-485-2955	115		1680-560-6441	125A	84
1680-485-3047	115	36	1680-560-6442	125A	67
1680-497-6279	122	32	1680-560-6444	125A	115
1680-497-6279	122	35	1680-560-6445	125	18
1680-509-7594	116		1680-560-6445	125A	18
1680-509-7598	116		1680-560-6446	125A	20
1680-509-7602	116		1680-560-6447	125A	118
1680-516-6543	115	34	1680-560-6449	125A	129
1680-516-6815	117	56	1680-564-1537	125	
1680-516-8427	115	63	1680-569-2570	79	
1680-517-0337	116	41	1680-570-0592	48	24
1680-527-1703	90A	14	1680-570-0666	116	
1680-527-1703	90A	38	1680-570-0667	116	36
1680-530-6164	90A	19	1680-570-0670	116	
1680-530-6164	90A	42	1680-570-4852	115	3
1680-532-6678	150	16	1680-570-4895	117	17
1680-532-6678	176	55	1680-570-4895	117	41
1680-535-5202	90A	26	1680-570-4895	118	59
1680-535-5203	90A	24	1680-570-4895	118	69
1680-536-7546	117	21	1680-572-5424	113	11
1680-536-7546	117	82	1680-572-5424	114	3
1680-536-8047	116	27	1680-572-5424	114	45
1680-536-8048	116		1680-572-6473	123	37
1680-536-8051	116	23	1680-586-6772	87	
1680-536-8052	116	25	1680-587-0980	116	16
1680-536-8060	116	29	1680-587-0981	116	18
1680-536-8061	120	2	1680-587-0983	116	
1680-536-8061	120	2	1680-587-0984	116	35
1680-536-8061	120	46	1680-589-5434	90A	25
1680-536-8091	117	76	1680-590-3782	125A	109
1680-536-8091	118	159	1680-591-8327	120	51
1680-536-8105	115	39	1680-591-8327	120	7
1680-544-0918	122	31	1680-600-2114	120	52
1680-544-0951	117	112	1680-600-2114	120	8
1680-544-0951	117	60	1680-600-6144	120	
1680-544-0951	118	80	1680-601-1536	41	69
1680-544-0951	118	9	1680-604-3243	122	
1680-544-0952	118	123	1680-604-8381	90	
1680-544-0952	118	23	1680-605-3412	115	
1680-546-1137	117	58	1680-624-8168	115	87
1680-546-1137	118	2	1680-626-1993	123	
1680-560-0664	125A	119	1680-626-7339	119	14

STOCK NUMBER	FIGURE NUMBER	ITEM NUMBER	STOCK NUMBER	FIGURE NUMBER	ITEM NUMBER
1680-626-7340	119	5	1680-730-7627	115	8
1680-626-7341	119	11	1680-736-8862	119	
1680-626-7342	119	4	1680-736-8879	44B	10
1680-626-7342	119	4	1680-759-5500	119	10
1680-626-7343	118		1680-759-5500	119	8
1680-626-7344	118	107	1680-773-6265	150	10
1680-626-7345	118	46	1680-773-6265	152	
1680-626-7346	118	148	1680-773-6267	101	19
1680-626-7346	118	47	1680-775-5969	154	
1680-626-7347	118	49	1680-775-6541	117	
1680-626-7348	118	98	1680-775-6541	117	96
1680-626-7349	118	147	1680-775-6541	118	
1680-626-7351	118	149	1680-780-0897	115	40
1680-626-7353	118	96	1680-784-3902	122	
1680-626-7354	118	97	1680-787-3985	125A	33
1680-626-7355	115	41	1680-795-0794	118	102A
1680-629-9642	118	89	1680-795-0794	119	45
1680-629-9643	118	140	1680-795-0805	90A	41
1680-630-5659	132	61A	1680-825-8489	117	26
1680-631-1052	132		1680-825-8489	117	57
1680-632-4437	115		1680-825-8489	117	87
1680-639-0614	123		1680-835-3175	118	161
1680-639-0614	123B		1680-855-9244	107	
1680-639-0617	115	94	1680-860-9472	119	22
1680-639-0618	115	95	1680-860-9472	119	22
1680-639-0619	115	96	1680-860-9472	119	29
1680-639-0620	115	97	1680-862-9125	120	33A
1680-639-1342	44B	21	1680-862-9125	120	78A
1680-640-4944	82	41	1680-872-1113	115	
1680-640-8570	136	27	1680-893-2867	116	
1680-647-3028	122		1680-898-0318	115	46
1680-650-1636	46	61	1680-898-0318	115	47
1680-650-1637	46	60	1680-922-5841	118	94
1680-658-2963	115		1680-961-4365	119	21
1680-663-3442	116	33	1680-983-7262	119	40
1680-663-3442	119	39	1680-983-7262	119	44
1680-670-2260	125A	152	1686-386-4306	115	
1680-671-4952	118	38	1730-028-1040	A14	7
1680-671-5887	118	40	1730-099-3244	F1	11
1680-672-7396	118	150	1730-142-8105	E5	6
1680-673-2047	87	46	1730-232-4525	E56	2
1680-673-2961	125	1	1730-240-8534	E1	6
1680-673-2961	125A		1730-240-8542	E71	5
1680-673-5489	118	128	1730-243-9064	F1	6
1680-673-5490	118	15	1730-277-7562	A6	3
1680-674-6933	50	369	1730-277-7563	A16	2
1680-674-6933	52	51	1730-293-3790	A6	
1680-691-2188	118	48	1730-300-2096	F2	2
1680-699-5797	136	6	1730-300-2107	F2	5
1680-701-4734	117	53	1730-300-2123	F3	4
1680-701-4734	118	6	1730-300-9444	F4	1
1680-701-9219	125	17	1730-300-9445	F2	3
1680-703-3359	115	20	1730-300-9446	F4	6
1680-703-3361	125A	40	1730-300-9447	F3	1
1680-703-3367	125A	39	1730-300-9448	F3	2
1680-706-3061	177		1730-300-9449	F3	3
1680-706-3063	177		1730-305-8648	A1	
1680-708-2341	122	14	1730-321-1028	A5	1
1680-710-1843	87	31	1730-491-0330	F1	1
1680-710-1843	87	9	1730-492-3018	F1	5
1680-710-8536	125A	88	1730-492-3134	F1	7
1680-710-8537	125A	58	1730-492-3519	F1	8
1680-710-8539	125A	16	1730-492-3605	F1	9
1680-710-8541	125A	78	1730-525-6223	A1	
1680-714-2019	125A		1730-545-6163	F2	
1680-715-9537	90	29	1730-545-6164	F2	
1680-715-9537	90	31	1730-555-4600	A19	
1680-716-1805	125A	10	1730-562-4965	162	44
1680-717-1213	125A	35	1730-562-4965	165	64
1680-727-5054	90A	29	1730-587-4027	F4	5
1680-730-2089	90A	36	1730-606-0193	F4	4

STOCK NUMBER	FIGURE NUMBER	ITEM NUMBER	STOCK NUMBER	FIGURE NUMBER	ITEM NUMBER
1730-606-0299	A2	5	2810-075-9162	188	
1730-608-6592	A23		2810-075-9163	188	
1730-613-1037	F3	5	2810-076-0590	202A	1
1730-623-5920	F2	1	2810-076-0592	199	16
1730-625-0791	A23		2810-076-0593	202A	8
1730-632-4547	150	12	2810-076-2693	190	
1730-633-0928	F2		2810-076-2695	190	
1730-633-0929	F2		2810-076-2696	190	6
1730-633-0933	A22	4	2810-076-2697	190	
1730-633-0935	A5	5	2810-076-2698	187	
1730-633-1000	F4	8	2810-076-2699	184	20
1730-633-1001	F4	7	2810-076-6042	190	
1730-633-1002	F2	4	2810-076-6042	207	
1730-640-7096	E66	6	2810-076-6091	202A	10
1730-658-8436	A5	6	2810-076-9042	190	
1730-659-5259	A23	2	2810-076-9043	190	
1730-685-5658	A19	1	2810-076-9060	189	
1730-712-1390	F4		2810-076-9061	189	
1730-794-4910	F2		2810-076-9062	189	7
1730-797-4793	A2		2810-076-9369	199	14
1730-798-3752	F2		2810-076-9371	183A	
1740-544-4712	A6	1	2810-077-1757	189	1
1740-673-0366	A21	5	2810-077-1757	183A	6
2590-693-4120	178		2810-084-1320	190	
2620-141-8813	162		2810-084-3314	192	2
2620-174-1746	162	36	2810-084-3314	192	6
2620-269-7266	165	27	2810-084-3314	193	4
2620-269-7577	165		2810-084-3314	194	15
2620-528-9251	162	37	2810-085-7402	190	
2620-542-0127	165	26	2810-086-4998	190	
2805-767-0492	116		2810-091-5683	190A	7
2810-016-0129	202A	6	2810-091-5684	190A	6
2810-016-0643	190		2810-091-5734	E73	2
2810-016-0646	190		2810-091-5793	211	
2810-017-2676	202A	7	2810-092-1743	190	28
2810-018-4007	194	1	2810-092-1743	190	28
2810-018-4007	183A		2810-092-1749	184	44
2810-020-6369	194	9	2810-092-1750	200	
2810-020-6370	194	7	2810-092-1751	206	70
2810-028-1722	202A	3	2810-092-1752	195	4
2810-034-3701	188		2810-097-4276	190	
2810-034-3702	188		2810-097-4277	190	
2810-034-3711	188	18	2810-097-4278	206	28
2810-034-3711	190	39	2810-097-4279	190	
2810-045-6625	188		2810-097-4282	191	15
2810-048-8137	192		2810-097-4283	191	9
2810-048-8139	191		2810-097-4284	186	8
2810-048-8145	192	15	2810-097-4285	184	36
2810-048-8145	193	14	2810-097-4287	189	8
2810-048-8718	206	22	2810-097-4289	185	10
2810-048-8819	190		2810-097-4293	183A	
2810-048-8820	190		2810-098-2642	210	20
2810-048-8843	190		2810-098-2644	188	22
2810-048-8844	190		2810-098-2657	188	
2810-048-9100	192	17	2810-118-1643	190	19
2810-048-9100	193	16	2810-118-2379	209	4
2810-048-9152	196	6	2810-118-3571	208	
2810-048-9525	190		2810-118-4482	207	50
2810-049-0088	188		2810-118-6350	188	
2810-049-0160	200		2810-118-6358	200	52
2810-049-0285	211	17	2810-118-6387	188	
2810-052-4358	190A	41	2810-118-6917	191	26
2810-055-5179	189		2810-118-6917	191	7
2810-064-5503	190		2810-118-6979	190	43
2810-066-4182	190		2810-118-6980	190	
2810-069-3342	190	45	2810-118-6981	190	
2810-070-6825	210	39	2810-118-6982	190	
2810-070-7830	190		2810-118-7605	201	6
2810-075-8295	202A		2810-118-7662	190A	9
2810-075-8296	199	12	2810-118-7665	206	58
2810-075-8297	202A	11	2810-118-7665	206	68

STOCK NUMBER	FIGURE NUMBER	ITEM NUMBER	STOCK NUMBER	FIGURE NUMBER	ITEM NUMBER
2810-118-8183	190A	23	2810-217-3698	190	16
2810-118-8220	188	37	2810-217-3699	190	26
2810-118-8489	205		2810-217-3700	198	37
2810-118-8718	201	13	2810-217-3702	186	5
2810-118-8718	BULK		2810-217-3703	186	10
2810-141-3580	198	30	2810-217-3704	185	
2810-149-7014	208	56	2810-217-3706	200	7
2810-149-7053	190A	10	2810-217-3707	206	73
2810-165-7047	187	6	2810-217-3708	207	18
2810-168-5115	188		2810-217-3710	198	7
2810-168-6422	E33	3	2810-217-3711	190	
2810-200-1635	187	33	2810-217-3712	205	6
2810-203-8307	768	1	2810-217-3713	205	23
2810-203-8536	190		2810-217-3714	190	48
2810-210-5457	207		2810-217-3715	190	51
2810-210-5460	206	54	2810-217-3716	207	
2810-210-5461	206	59	2810-217-3717	190	52
2810-213-1772	199	10	2810-217-3718	190	49
2810-213-1772	199	4	2810-217-3721	183A	
2810-213-1785	201	9	2810-217-3722	183A	
2810-215-9627	191	28	2810-217-3724	194	12
2810-215-9630	188	41	2810-217-3728	183A	
2810-215-9631	185	2A	2810-217-3730	198	
2810-215-9632	184	8	2810-217-3732	190	
2810-215-9635	206	80	2810-217-3735	190	53
2810-215-9636	206	77	2810-217-3737	190A	
2810-215-9637	206	74	2810-217-3765	204	16
2810-215-9639	190	18	2810-227-5715	208	54
2810-215-9648	191		2810-251-9354	200	42
2810-215-9649	191		2810-251-9354	206	52
2810-215-9655	205	15	2810-253-7569	207	48
2810-215-9677	207		2810-286-9298	185	8
2810-215-9679	207	28	2810-288-5915	206	
2810-215-9682	190	50	2810-290-8871	198	29
2810-215-9683	186		2810-290-8872	208	4
2810-215-9686	197	1	2810-291-0442	204	5
2810-215-9686	183A		2810-292-3630	190A	38
2810-215-9687	196	1	2810-293-5537	208	53
2810-215-9687	183A		2810-293-5563	187	
2810-215-9688	210	13	2810-293-5578	190A	16
2810-215-9689	210	27	2810-294-3051	190A	
2810-215-9690	204	14	2810-294-3052	190A	
2810-215-9692	202A	13	2810-294-3107	190	
2810-215-9693	198		2810-294-3117	190	
2810-215-9694	198		2810-294-3124	190	
2810-215-9695	195		2810-294-3493	190	
2810-217-3189	207		2810-298-0551	210	19
2810-217-3668	201	1	2810-303-6049	199	
2810-217-3669	205	8	2810-303-6057	199	
2810-217-3671	190	58	2810-303-6061	199	
2810-217-3671	207	11	2810-303-6080	199	
2810-217-3672	207	30	2810-303-6083	199	
2810-217-3673	210	1	2810-303-6087	199	
2810-217-3674	190	57	2810-303-6091	199	
2810-217-3674	198	36	2810-303-6097	199	
2810-217-3675	199	9	2810-303-7774	190	61
2810-217-3676	200	4	2810-303-9399	199	
2810-217-3677	194		2810-303-9403	199	
2810-217-3678	194		2810-304-0034	206	50
2810-217-3679	191	33	2810-304-0038	195	9
2810-217-3680	191	17	2810-305-1822	201	19
2810-217-3681	190A	15	2810-305-1822	206	27
2810-217-3682	194	6	2810-306-5768	201	8
2810-217-3684	192		2810-306-5768	BULK	
2810-217-3684	193		2810-306-5773	208	52
2810-217-3687	196	7	2810-306-5774	208	42
2810-217-3687	197	7	2810-306-5790	188	38
2810-217-3689	200	38	2810-306-5791	188	
2810-217-3690	184	2	2810-306-5792	188	
2810-217-3696	205	11	2810-306-5793	188	
2810-217-3697	198	4	2810-306-5794	188	

STOCK NUMBER	FIGURE NUMBER	ITEM NUMBER	STOCK NUMBER	FIGURE NUMBER	ITEM NUMBER
2810-306-5850	188	14	2810-326-6625	187	4
2810-306-5850	188	21	2810-326-6683	190	
2810-306-5860	208	73	2810-326-6684	190	
2810-306-5861	208	70	2810-326-6685	190	21
2810-306-5862	208	71	2810-326-6686	190	
2810-306-5863	208	64	2810-326-6687	190	
2810-306-5870	190A	30	2810-326-6688	190	
2810-306-5871	190A	31	2810-326-6711	189	10
2810-306-5877	207	47	2810-327-6962	192	10
2810-306-5894	199	19	2810-330-6494	185	
2810-306-5896	186	4	2810-331-6438	190	
2810-306-5897	208		2810-331-6438	190	22
2810-306-5899	199	3	2810-331-6446	200	48
2810-306-5901	200	36	2810-332-6719	196	4
2810-306-5904	200	31	2810-333-4348	208	
2810-306-5917	214		2810-333-4349	208	
2810-306-6077	190A	24	2810-335-4809	187	14
2810-306-6113	184	1	2810-335-6401	190	
2810-306-6124	190A	3	2810-340-7802	207	40
2810-306-6128	208	19	2810-341-4849	208	
2810-306-6129	208	25	2810-341-4849	208	
2810-306-6139	208	26	2810-342-1177	200	
2810-306-6144	200		2810-343-3857	204	15
2810-306-6145	200	43	2810-343-3857	205	7
2810-306-6162	186	1	2810-343-3858	186	14
2810-310-2865	187	34	2810-343-9278	192	4
2810-310-8834	208	80	2810-343-9278	193	6
2810-310-8834	208	80	2810-343-9298	200	
2810-310-8837	190		2810-343-9305	211	19
2810-310-8848	190A	36	2810-344-1389	187	
2810-310-8849	190A	34	2810-344-1392	187	
2810-310-8851	208	50	2810-344-1393	187	
2810-310-8852	208	45	2810-344-1402	206	44
2810-310-8963	190		2810-344-1432	190	
2810-310-9074	184	17	2810-344-1434	190	
2810-310-9078	208	61	2810-345-1512	190	15
2810-310-9094	214	6	2810-345-3909	188	
2810-313-3600	190		2810-346-1435	192	1
2810-314-4607	200	13	2810-346-1435	183A	
2810-314-4607	200	13	2810-346-4197	205	3
2810-314-4643	203	5	2810-346-4232	208	23
2810-314-8130	201	3	2810-346-4362	201	10
2810-314-8167	200	12	2810-347-5955	185	6
2810-315-7910	192	21	2810-386-4366	206	29
2810-315-7910	193	20	2810-386-4439	188	
2810-316-9777	205		2810-386-4442	184	
2810-316-9778	203	3	2810-386-4442	190	
2810-316-9779	205	1	2810-386-4442	198	
2810-320-2086	185	13	2810-386-4442	206	
2810-320-2088	199		2810-386-4442	207	
2810-320-2101	187	19	2810-386-4442	208	
2810-320-2110	203	15	2810-386-4443	190	
2810-320-2111	187	18	2810-386-4443	207	
2810-320-2112	208	78	2810-393-7638	187	29
2810-320-2113	207	35	2810-396-4317	206	63
2810-320-2114	207	36	2810-440-2854	188	
2810-320-2115	207	37	2810-440-2855	188	
2810-320-2132	185	9	2810-440-2862	188	
2810-320-2133	204	9	2810-440-4372	190A	42
2810-320-2134	187	46	2810-440-7428	203	11
2810-320-2140	186	11	2810-440-7990	E38	6
2810-322-4194	190	12	2810-440-8226	E6	5
2810-322-4204	190	8	2810-445-1509	188	
2810-322-4205	190	7	2810-445-1509	190	
2810-322-4206	190	11	2810-445-1510	188	
2810-322-4209	190	10	2810-445-2455	188	
2810-322-4216	192	8	2810-445-3497	199	8
2810-322-4251	200		2810-446-8208	187	7
2810-326-0364	197	4	2810-474-3120	E24	5
2810-326-0369	202A	17	2810-478-8835	188	15
2810-326-0817	210		2810-478-8860	201	4

STOCK NUMBER	FIGURE NUMBER	ITEM NUMBER	STOCK NUMBER	FIGURE NUMBER	ITEM NUMBER
2810-478-8910	205	21	2810-479-1281	199	
2810-478-8920	191	27	2810-479-1291	208	29
2810-478-8920	191	8	2810-479-1302	200	40
2810-478-8920	195	16	2810-479-1308	201	2
2810-478-8920	196	9	2810-479-1342	189	
2810-478-8920	197	9	2810-479-1359	205	
2810-478-8924	203	2	2810-479-1359	205	26
2810-478-8924	204	13	2810-479-1387	184	19
2810-478-8924	205	5	2810-501-2888	188	48
2810-478-9111	201	15	2810-501-2894	188	
2810-478-9125	187	42	2810-501-2898	188	
2810-478-9127	187	11	2810-501-2899	188	
2810-478-9150	211	23	2810-501-2900	188	
2810-478-9188	211	22	2810-501-2901	188	
2810-478-9360	208	24	2810-501-2902	188	
2810-478-9385	203	10	2810-501-2903	188	
2810-478-9411	201	17	2810-505-8608	187	
2810-478-9412	187	26	2810-505-8609	187	
2810-478-9418	187	27	2810-505-8624	190	
2810-478-9436	198	32	2810-505-8636	210	22
2810-478-9440	201	11	2810-505-8637	210	23
2810-478-9451	188	17	2810-509-5888	190	30
2810-478-9512	203	13	2810-511-3654	190	9
2810-478-9553	190	13	2810-512-9528	187	
2810-478-9562	190A	29	2810-512-9529	187	
2810-478-9589	190	3	2810-512-9564	190	
2810-478-9731	206	30	2810-512-9580	187	43
2810-478-9767	207	49	2810-512-9585	198	20
2810-478-9782	188	28	2810-512-9595	188	
2810-478-9783	187	17	2810-512-9596	188	
2810-478-9785	187		2810-512-9632	208	1
2810-478-9787	199	15	2810-512-9676	207	23
2810-478-9847	188		2810-512-9709	190A	37
2810-478-9850	210	24	2810-512-9732	190	29
2810-478-9850	210	3	2810-512-9757	191	12
2810-478-9853	210	17	2810-512-9757	191	31
2810-478-9869	208	49	2810-512-9757	195	13
2810-478-9870	208	69	2810-512-9773	207	32
2810-478-9877	208	35	2810-512-9813	204	8
2810-478-9877	208	41	2810-512-9874	187	38
2810-478-9881	210		2810-512-9920	208	
2810-478-9905	187	12	2810-512-9927	209	1
2810-478-9924	206		2810-512-9927	183A	20
2810-478-9956	198	27	2810-512-9973	208	62
2810-479-0220	188	47	2810-515-2804	200	39
2810-479-0221	188	46	2810-515-4189	203	9
2810-479-0221	188	50	2810-521-0734	210	21
2810-479-0222	188		2810-522-4806	190	
2810-479-0371	206	21	2810-522-4807	190	
2810-479-0372	206		2810-522-4818	190	
2810-479-0421	208	11	2810-522-4831	184	35
2810-479-1029	208		2810-523-3112	191	21
2810-479-1030	208		2810-524-3467	188	16
2810-479-1062	187		2810-524-3467	188	23
2810-479-1105	184		2810-525-7430	206	
2810-479-1105	190		2810-525-7431	206	
2810-479-1105	198		2810-525-7432	206	
2810-479-1105	206		2810-525-7433	206	
2810-479-1105	207		2810-525-7435	206	
2810-479-1105	208		2810-525-7436	206	
2810-479-1108	200	22	2810-533-4911	205	24
2810-479-1109	200		2810-533-5039	210	37
2810-479-1110	190		2810-536-3670	211	12
2810-479-1111	190		2810-536-3671	211	16
2810-479-1158	199	13	2810-540-4976	210	8
2810-479-1161	208	79	2810-544-1007	204	4
2810-479-1162	201	5	2810-545-7859	194	4
2810-479-1204	190A		2810-555-6236	208	
2810-479-1251	208	22	2810-555-6533	190	
2810-479-1276	201	14	2810-555-6670	198	13
2810-479-1280	199	18	2810-555-7021	190A	

STOCK NUMBER	FIGURE NUMBER	ITEM NUMBER	STOCK NUMBER	FIGURE NUMBER	ITEM NUMBER
2810-567-6384	190		2810-662-2415	188	24
2810-569-2845	185	4	2810-662-2449	187	
2810-569-2856	207	42	2810-662-2468	184	
2810-569-2857	200	34	2810-662-2481	190	
2810-569-2864	184		2810-662-2492	208	
2810-570-2780	190	41	2810-662-2513	187	
2810-573-4038	190A	21	2810-662-2987	190A	13
2810-575-3051	190	62	2810-662-3048	208	
2810-575-6604	192	18	2810-663-1535	215	2
2810-575-6604	193	17	2810-663-2147	208	28
2810-579-7838	210	38	2810-670-7180	200	45
2810-579-7839	200	35	2810-671-6637	190	
2810-579-7840	207	43	2810-671-6638	190	
2810-579-7841	200	33	2810-672-2006	187	31
2810-579-7841	207	45	2810-672-4938	189	13
2810-580-1091	190		2810-672-5841	188	
2810-580-1092	190		2810-674-2762	192	
2810-580-1093	190		2810-675-3377	206	24
2810-580-1094	190	42	2810-675-3378	206	
2810-580-1095	190		2810-686-1730	190	14
2810-580-1096	190		2810-690-5198	188	
2810-580-1097	190		2810-694-0102	190	20
2810-580-1098	190		2810-694-0103	190	
2810-590-8855	211	13	2810-694-0125	190A	39
2810-594-1508	190A	35	2810-696-9504	190	
2810-599-6332	210	26	2810-696-9505	190	
2810-599-6332	210	5	2810-697-8592	190	
2810-600-3418	199		2810-715-2709	190	
2810-602-6537	193	1	2810-717-8912	188	
2810-602-6537	183A		2810-719-4420	207	16
2810-605-8930	190	44	2810-719-4421	207	17
2810-608-6170	190		2810-719-4422	207	15
2810-608-6814	184	34	2810-719-7617	190	46
2810-608-6815	184		2810-722-0104	190A	5
2810-608-6816	184		2810-724-1300	211	20
2810-609-0375	187		2810-727-5697	190A	
2810-609-0376	187		2810-732-9269	208	
2810-609-0377	187		2810-737-0931	198	
2810-609-0433	191	1	2810-737-0932	198	
2810-609-0434	191	2	2810-751-8688	188	
2810-609-0435	191	14	2810-751-8752	188	
2810-614-8713	200				
2810-618-5678	190		2810-757-4845	190	
2810-618-5679	190		2810-763-2154	190	
2810-623-3767	190	47	2810-765-9629	200	30
2810-626-1283	205	17	2810-770-4694	200	37
2810-626-2016	198	24	2810-771-7147	210	
2810-628-3866	190		2810-775-4303	195	1
2810-628-3870	190		2810-780-0901	188	39
2810-629-4571	210	6	2810-780-0903	188	
2810-630-2173	190		2810-780-6486	188	
2810-632-7158	204		2810-783-1513	199	
2810-632-7158	205		2810-783-1524	198	1
2810-640-2639	204	1	2810-784-3979	188	
2810-640-2641	208	74	2810-785-6886	211	8
2810-640-8352	190A	22	2810-793-2846	183A	
2810-641-6515	202A	5	2810-794-5935	199	5
2810-641-6519	205		2810-794-5936	199	6
2810-641-7151	198	38	2810-794-7862	188	43
2810-641-7152	210	12	2810-796-5093	206	1
2810-641-7152	210	12	2810-796-5093	183A	17
2810-651-1292	190	67	2810-797-1594	191	37
2810-654-1504	176		2810-797-4037	190	
2810-654-1504	183A		2810-797-4038	190	
2810-654-3205	190	17	2810-797-4829	188	
2810-654-9051	190		2810-797-4830	188	
2810-656-3134	204	10	2810-798-8574	189	
2810-656-3658	190		2810-803-5249	189	
2810-662-1792	187		2810-803-5311	190	
2810-662-2281	203		2810-807-0721	188	34
2810-662-2412	186	13	2810-808-2976	184	

STOCK NUMBER	FIGURE NUMBER	ITEM NUMBER	STOCK NUMBER	FIGURE NUMBER	ITEM NUMBER
2810-820-4380	190		2810-939-7789	214	5
2810-820-6089	190				
2810-820-9215	190				
2810-825-8255	188		2810-953-9495	176	85
2810-828-9693	188		2810-953-9495	183A	
2810-828-9698	188		2810-954-3985	188	
2810-847-7471	188		2810-954-4725	188	
2810-850-4461	208		2810-954-5863	188	7
2810-850-8480	188		2810-957-8514	188	
2810-856-0335	188		2810-963-0982	188	
2810-856-7056	190		2810-963-9073	188	
2810-857-0431	214	4	2810-963-9075	188	
2810-859-6034	210		2810-967-3389	188	
2810-860-0597	190	32	2810-971-3947	188	
2810-860-0602	208		2810-972-5309	188	
2810-862-4857	188		2810-980-7831	188	3
2810-863-1146	188		2810-987-3291	206	
2810-863-1152	199		2810-987-3292	206	
2810-863-1153	199		2810-987-5108	211	
2810-863-1154	199		2810-987-5108	183A	
2810-863-1155	199		2810-987-5188	183A	
2810-863-1157	199		2810-989-9803	188	
2810-863-1158	199		2810-989-9804	188	
2810-863-1159	199		2810-989-9805	188	
2810-863-1160	199		2810-991-8489	190	
2810-863-1161	199		2810-992-2559	211	15
2810-863-1162	199		2810-992-4601	207	
2810-863-1163	199		2810-992-6497	187	
2810-863-1165	199		2810-992-6507	187	
2810-863-1166	199		2810-992-7618	211	
2810-863-1167	199		2810-995-2483	211	14
2810-863-1168	199		2810-995-6902	188	
2810-863-1169	199		2810-997-4732	200	1
2810-863-1180	188		2810-997-4732	183A	11
2810-863-1185	188		2815-085-7178	212A	6
2810-863-7947	188		2815-085-7178	212A	80
2810-863-7949	188		2815-353-9197	28	11
2810-863-7950	188		2825-570-6309	212A	155
2810-863-7951	188		2840-954-3987	188	
2810-863-7954	188		2840-954-3999	188	
2810-870-0837	188	11	2840-954-4299	188	
2810-870-0837	201	18	2910-203-3322	124	84
2810-870-3894	188		2910-442-1646	214A	420
2810-870-3895	188		2915-030-6795	214A	217
2810-870-3896	188		2915-031-7444	214A	246
2810-870-3897	188		2915-031-7542	175G	33
2810-872-9410	190		2915-032-8178	74	77
2810-872-9412	190		2915-032-8178	75	93
2810-872-9413	190		2915-035-5072	214A	310
2810-872-9414	190		2915-035-5077	214A	438
2810-872-9415	190		2915-035-5083	214A	82
2810-875-1463	198	5	2915-035-5090	214A	530
2810-882-8283	188		2915-035-5090	214A	537
2810-884-5808	208		2915-035-6974	175F	13
2810-885-4054	211		2915-035-6978	175F	36
2810-885-4060	188	45	2915-037-8777	175F	37
2810-885-6436	188	49	2915-037-8780	175F	3
2810-885-6547	188		2915-037-8782	175F	6
2810-886-1787	188		2915-037-8787	175F	29
2810-887-2139	214		2915-037-8789	175F	38
2810-895-9422	188		2915-037-8790	175F	31
2810-895-9423	188		2915-037-8791	175F	20
2810-895-9424	188		2915-037-8911	76B	23
2810-904-2458	211	3	2915-037-8911	175C	4
2810-905-6441	190	25	2915-037-9052	214A	212
2810-911-8046	190A	18	2915-037-9104	214A	590
2810-911-8047	190A	19	2915-037-9290	214A	1
2810-914-1821	190		2915-037-9411	214A	441
2810-919-2092	190		2915-037-9423	214A	452
2810-925-9881	199		2915-037-9423	214A	478
2810-939-7695	190A		2915-037-9543	214A	

STOCK NUMBER	FIGURE NUMBER	ITEM NUMBER	STOCK NUMBER	FIGURE NUMBER	ITEM NUMBER
2915-037-9899	175G	47	2915-201-2097	214A	474
2915-041-0328	214A	67	2915-202-5626	214A	97
2915-053-1748	175E	26	2915-202-5816	175	
2915-053-1750	175E	28	2915-202-5816	175C	
2915-053-3908	79A	48	2915-202-5827	80	118
2915-070-4564	78A	19	2915-202-5827	81	101
2915-070-4567	78A	18	2915-202-5827	81A	
2915-091-6769	214A	432	2915-202-5931	124	81
2915-092-6298	214A	458	2915-203-5494	124	13
2915-093-4019	214A	551	2915-203-5494	124	76
2915-093-4021	214A	400	2915-203-6129	175	
2915-093-4022	214A	195	2915-203-6129	175	
2915-093-4024	214A	288	2915-203-6129	175F	
2915-093-4027	214A		2915-203-7781	78	25
2915-095-0450	78A	14	2915-205-1733	175C	20
2915-095-0451	78A	13	2915-205-1765	81A	33
2915-095-0621	78A	5	2915-213-6767	214A	249
2915-095-0623	78A	11	2915-213-6768	214A	243
2915-095-0706	78A	7	2915-229-2874	214A	139
2915-097-0311	74	79	2915-231-3143	214A	375
2915-097-0311	75	95	2915-231-3143	214A	398
2915-097-0319	79	162	2915-233-2088	214A	216
2915-097-0319	80	97	2915-233-2179	214A	113
2915-097-0319	81	80	2915-233-2179	214A	286
2915-097-4640	214A	122	2915-233-7896	214A	535
2915-097-4642	214A		2915-233-7896	214A	542
2915-097-4643	214A		2915-233-7906	214A	153
2915-098-3931	214A	544	2915-235-0676	214A	79
2915-098-3932	214A	80	2915-235-1596	214A	545
2915-098-3936	214A	7	2915-235-7635	214A	509
2915-098-3939	214A	13	2915-243-4358	214A	323
2915-098-8804	214A	503	2915-256-8025	78A	20
2915-098-8859	214A	220	2915-265-0863	214A	196
2915-118-3951	214A		2915-265-0863	214A	350
2915-119-1494	214A	231	2915-265-0863	214A	83
2915-119-7229	175H	9	2915-265-1066	214A	494
2915-119-7234	175H	28	2915-265-1067	214A	172
2915-142-4674	175G	48	2915-265-9855	175E	39
2915-142-4677	175G	49	2915-288-2976	214A	
2915-142-4680	175G		2915-288-3130	214A	
2915-147-1795	214A	329	2915-289-8412	175	
2915-147-6137	214A	159	2915-291-6328	80	120
2915-147-9309	214A	131	2915-291-6328	81	103
2915-147-9312	214A	20	2915-291-9301	78A	15
2915-148-4727	214A	185	2915-293-4222	214A	341
2915-149-9395	214A	168	2915-293-4529	214A	
2915-149-9396	214A		2915-293-4684	214A	124
2915-149-9397	214A		2915-293-4690	214A	
2915-149-9412	214A	586	2915-293-4905	78A	12
2915-149-9767	214A		2915-299-0949	175E	17
2915-166-4804	175H	7	2915-302-4277	79B	16
2915-166-5389	175B	10	2915-302-4278	79B	21
2915-166-5392	175B	36	2915-302-4365	175C	34
2915-166-6488	175H	23	2915-304-5661	214A	252
2915-166-6581	175B	20	2915-304-5662	214A	255
2915-167-1410	175E	41	2915-305-2121	79B	6
2915-167-1410	175E	46	2915-306-0053	175F	30
2915-167-1436	175G	46	2915-307-4973	214A	211
2915-167-2383	175F	14	2915-307-4992	214A	296
2915-167-2429	175F		2915-307-5063	214A	457
2915-167-2524	76B	19	2915-307-5064	214A	202
2915-167-4767	175F	34	2915-307-5115	214A	210
2915-167-4779	175G	50	2915-307-5158	214A	78
2915-180-4971	175F	5	2915-307-5163	214A	464
2915-180-6032	175G	8	2915-307-5172	214A	362
2915-200-9654	78A	22	2915-307-5191	214A	136
2915-200-9733	214A		2915-307-5195	214A	520
2915-201-0032	175F	23	2915-307-5195	214A	525
2915-201-0033	175F	8	2915-307-5197	214A	
2915-201-0165	214A	360	2915-307-5207	214A	331
2915-201-2093	214A	317	2915-307-5209	214A	324

STOCK NUMBER	FIGURE NUMBER	ITEM NUMBER	STOCK NUMBER	FIGURE NUMBER	ITEM NUMBER
2915-307-5213	214A	206	2915-323-4517	79	
2915-307-5220	214A	276	2915-325-4559	77	86
2915-307-5223	214A	546	2915-328-1224	214A	
2915-307-5235	214A	21	2915-328-2179	79B	14
2915-307-5273	214A	455	2915-328-2180	79B	12
2915-307-5275	214A	295	2915-328-2195	79B	20
2915-307-5275	214A	505	2915-328-3006	175G	29
2915-307-5328	214A	303	2915-328-3104	78	21
2915-307-5331	214A	31	2915-329-9205	214A	46
2915-307-5334	214A	8	2915-335-5260	214A	42
2915-307-5340	214A	5	2915-335-5270	81A	
2915-307-5343	214A	369	2915-335-5271	175C	1
2915-307-5343	214A	392	2915-335-7073	214A	256
2915-307-5344	214A	370	2915-335-7073	214A	411
2915-307-5344	214A	393	2915-335-7073	214A	412
2915-307-5348	214A	43	2915-335-7073	214A	413
2915-307-5356	214A	149	2915-335-7073	214A	414
2915-307-5357	214A	148	2915-335-7140	81A	1
2915-307-5406	214A	407	2915-345-5538	79B	19
2915-307-5407	214A	330	2915-347-5051	175G	16
2915-307-5476	214A	533	2915-349-2135	79B	1
2915-307-5476	214A	540	2915-363-2953	175F	1
2915-307-5491	214A	510	2915-370-9875	214A	429
2915-307-5513	214A	191	2915-370-9875	214A	437
2915-307-5516	214A	269	2915-370-9876	214A	465
2915-307-5532	214A	560	2915-370-9876	214A	467
2915-307-5547	214A	371	2915-370-9892	214A	364
2915-307-5553	214A	394	2915-370-9913	214A	258
2915-307-5560	214A	120	2915-373-8729	175F	10
2915-307-5571	214A	308	2915-373-8730	175F	27
2915-307-5578	214A	118	2915-373-8766	76B	14
2915-307-5581	214A	450	2915-373-8766	175C	33
2915-307-5586	214A	512	2915-373-8767	76B	13
2915-307-5592	214A	129	2915-373-8767	175C	32
2915-307-5595	214A	145	2915-373-8778	76B	12
2915-307-5644	214A	133	2915-373-8778	175C	31
2915-307-5649	214A	451	2915-376-6873	175F	28
2915-307-5650	214A	471	2915-376-6879	175C	24
2915-307-5651	214A	433	2915-376-6881	76B	10
2915-307-5652	214A	476	2915-386-8799	175G	
2915-307-5653	214A	470	2915-397-5742	175C	41
2915-307-5655	214A	479	2915-438-9178	78A	17
2915-307-5668	214A	326	2915-438-9272	78A	9
2915-307-5707	214A	513	2915-442-2416	214A	367
2915-307-5711	214A	154	2915-442-2572	214A	
2915-307-5728	214A	230	2915-442-2675	214A	281
2915-308-0878	214A	461	2915-442-3303	214A	74
2915-308-0879	214A	443	2915-442-4292	214A	204
2915-308-1579	175G	53	2915-442-4297	214A	485
2915-310-3523	214A	524	2915-442-4692	214A	126
2915-310-3523	214A	529	2915-442-4792	214A	460
2915-310-3526	214A	52	2915-442-5848	175G	35
2915-310-3528	214A	62	2915-446-4770	81A	
2915-310-3529	214A	322	2915-446-7590	175G	5
2915-310-3582	214A	333	2915-449-1806	175B	
2915-310-3586	214A	209	2915-449-1813	175B	12
2915-310-5389	79	80	2915-449-2092	175G	45
2915-310-5389	79B		2915-449-2092	175G	52
2915-310-6177	214A	218	2915-449-2095	175G	
2915-314-9495	214A	72	2915-474-3815	175H	21
2915-314-9497	214A	63	2915-484-7871	214A	164
2915-314-9499	214A	229	2915-484-7871	214A	347
2915-315-8427	76B	6	2915-484-7871	214A	489
2915-316-2098	214A	150	2915-484-7871	214A	490
2915-316-2119	214A	234	2915-484-7871	214A	491
2915-316-2131	214A	418	2915-484-7871	214A	492
2915-321-1766	214A	435	2915-484-7871	214A	591
2915-321-1766	214A	468	2915-484-8167	214A	311
2915-321-2067	79B		2915-484-8168	214A	
2915-322-2478	214A	115	2915-484-8169	214A	
2915-323-4284	78	1	2915-484-8172	214A	205

STOCK NUMBER	FIGURE NUMBER	ITEM NUMBER	STOCK NUMBER	FIGURE NUMBER	ITEM NUMBER
2915-484-8172	214A	357	2915-513-5230	175	
2915-484-8172	214A	498	2915-513-5230	175E	
2915-484-8172	214A	502	2915-513-5230	175E	
2915-484-8264	214A		2915-514-1729	214A	192
2915-484-8265	214A		2915-516-7793	214A	313
2915-484-8316	214A	104	2915-516-7962	214A	588
2915-484-8316	214A	265	2915-516-7962	214A	589
2915-484-8337	214A	342	2915-516-8082	214A	517
2915-484-8338	214A		2915-524-4332	214A	584
2915-484-8380	214A	30	2915-524-4451	214A	346
2915-484-8490	214A	306	2915-524-4452	214A	
2915-484-8493	214A	304	2915-531-2821	214A	240
2915-484-8494	214A		2915-531-2821	214A	242
2915-484-8495	214A		2915-531-3247	175E	7
2915-484-8516	214A	327	2915-535-0235	214A	38
2915-484-8538	214A	554	2915-535-6265	79A	6
2915-484-8554	214A	277	2915-540-7291	175C	27
2915-484-8554	214A	563	2915-545-0456	175C	13
2915-484-9377	214A	103	2915-560-5362	65	12
2915-484-9419	214A	366	2915-560-5365	73	11
2915-484-9419	214A	389	2915-560-5383	56	52
2915-484-9710	214A	486	2915-571-3504	175E	42
2915-484-9794	214A	415	2915-571-3511	175E	21
2915-484-9794	214A	416	2915-593-5731	214A	190
2915-484-9878	214A	430	2915-595-4268	78	40
2915-484-9883	214A	68	2915-595-4268	78A	
2915-484-9895	214A	401	2915-595-4875	175	
2915-484-9954	214A	466	2915-595-4875	175B	
2915-485-0386	214A	499	2915-603-6451	175E	1
2915-485-0452	214A	182	2915-603-6452	175E	14
2915-485-0533	214A	273	2915-604-8359	214A	
2915-485-0576	214A	179	2915-604-8359	214A	39
2915-485-0596	214A	319	2915-605-4553	175	
2915-485-0603	214A	203	2915-605-9862	175	
2915-485-0603	214A	454	2915-605-9862	KITS	
2915-485-0603	214A	484	2915-605-9863	175	
2915-485-0603	214A	504	2915-606-3709	214A	
2915-485-0672	214A	94	2915-608-6856	214	
2915-485-0697	214A	132	2915-609-3663	175C	28
2915-485-0759	214A	344	2915-614-5527	214A	143
2915-485-0820	214A	183	2915-620-2140	214A	264
2915-485-1051	214A	475	2915-624-8595	79B	18
2915-485-1053	214A	442	2915-625-7443	175C	8
2915-485-1125	214A		2915-625-7444	175C	15
2915-485-1126	214A		2915-625-7445	175C	17
2915-485-1159	214A		2915-625-7447	175C	42
2915-485-1160	214A		2915-625-7448	175C	11
2915-485-1187	214A	259	2915-625-7449	175C	18
2915-485-1188	214A	127	2915-625-7450	175C	22
2915-485-1243	214A	163	2915-625-7451	175C	40
2915-485-1380	214A	6	2915-625-7451	175C	45
2915-485-1441	214A	69	2915-625-7453	175C	16
2915-485-1587	214A	162	2915-625-7454	175C	19
2915-485-1590	214A	134	2915-626-7448	214A	
2915-486-1628	175B	11	2915-628-3760	169	50
2915-486-1645	175		2915-639-8879	79B	
2915-486-1645	175		2915-640-9144	214A	152
2915-486-1645	175H		2915-641-5615	78A	1
2915-486-2856	78A	16	2915-653-7212	79B	
2915-504-9986	175		2915-653-7212	KITS	
2915-504-9986	175		2915-654-9611	175	
2915-504-9986	175G		2915-654-9611	KITS	
2915-504-9999	175		2915-658-9923	175	
2915-506-3374	214A	160	2915-658-9923	KITS	
2915-506-3456	79B		2915-663-4655	78	
2915-508-6169	78		2915-664-3144	28	8
2915-508-6187	78		2915-664-7818	28	17
2915-510-8383	81A		2915-671-0346	215	8
2915-511-9122	214A	146	2915-672-6066	79A	
2915-512-4427	214A	473	2915-672-6066	KITS	
2915-513-1329	78		2915-694-1562	79A	29

STOCK NUMBER	FIGURE NUMBER	ITEM NUMBER	STOCK NUMBER	FIGURE NUMBER	ITEM NUMBER
2915-694-9188	214A	193	2925-033-2452	212A	182
2915-697-5771	79A	18	2925-033-2463	212A	212
2915-697-5776	79A	23	2925-033-2553	212A	5
2915-703-7091	175B	22	2925-033-4621	175D	
2915-703-7095	175B	27	2925-037-8133	175A	115
2915-703-8483	175		2925-037-8322	175A	77
2915-703-8483	KITS		2925-037-8920	213	
2915-703-8483	175G		2925-056-7058	213	11
2915-703-8538	175G	36	2925-065-7746	183A	21
2915-703-8631	175G		2925-065-7746	212A	
2915-716-2267	175		2925-066-0307	175D	
2915-716-2267	KITS		2925-066-0307	175D	15
2915-731-9396	214		2925-085-7316	175D	1
2915-731-9396	214A		2925-085-7318	175D	81
2915-738-6782	175E	36	2925-085-7320	175D	33
2915-740-1463	175		2925-085-7322	175D	65
2915-740-1463	175		2925-085-7323	175D	
2915-740-1463	KITS		2925-085-7326	175D	80
2915-740-1463	175G		2925-085-7335	175D	48
2915-752-9585	175	2	2925-090-4714	213	
2915-766-6739	KITS		2925-091-6619	175A	71
2915-767-8380	81A	6	2925-091-6633	175A	44
2915-775-0580	214A		2925-141-9261	213	
2915-775-0591	KITS		2925-141-9378	175	
2915-775-0591	214A		2925-141-9378	175A	
2915-775-0606	KITS		2925-141-9736	128	
2915-775-0606	214A		2925-141-9746	175	
2915-775-0610	KITS		2925-141-9746	175D	
2915-775-0610	175B		2925-143-5434	175D	89
2915-775-0611	KITS		2925-143-5806	175D	12
2915-775-0611	175B		2925-143-5809	175D	10
2915-775-6528	KITS		2925-143-5857	175D	13
2915-775-6528	214A		2925-143-5858	175D	88
2915-775-6536	KITS		2925-143-5859	175D	20
2915-775-6536	175H		2925-167-2640	175	
2915-775-6537	KITS		2925-180-1266	175	
2915-775-6537	175H		2925-180-3194	175	
2915-775-7845	79		2925-182-9163	175D	14
2915-777-6536	KITS		2925-182-9718	212A	4
2915-783-6757	214A		2925-182-9887	175A	84
2915-787-4018	214A	447	2925-201-1846	212A	39
2915-788-3351	KITS		2925-201-8000	212A	104
2915-788-3351	214A		2925-211-4026	175A	7
2915-795-2667	214A	557	2925-211-4759	212A	
2915-800-2985	214A	251	2925-211-4761	213	
2915-819-9573	214A		2925-215-4952	212A	47
2915-856-9722	KITS		2925-215-4953	212A	63
2915-856-9722	214A		2925-215-4954	212A	
2915-859-8472	79	160	2925-231-3108	212A	132
2915-859-8472	79A		2925-231-3108	212A	134
2915-859-8587	79A	16	2925-233-0889	175A	82
2915-859-8589	KITS		2925-233-5644	175	
2915-868-9781	175F		2925-233-5644	175A	
2915-888-9545	214A	299	2925-253-0643	175D	67
2915-913-7043	214	1	2925-284-1084	175D	69
2915-970-1779	81A		2925-284-1085	175D	68
2915-970-1779	KITS		2925-290-6110	212A	79
2915-970-1779	KITS		2925-291-1048	212A	118
2915-974-0148	79A		2925-293-4223	175A	58
2915-974-8157	214A	250	2925-293-4237	175A	6
2920-090-4676	212A	57	2925-293-4538	175A	49
2920-268-4069	175A		2925-293-4695	213	4
2920-441-8297	175D	62	2925-293-6695	175D	93
2920-484-0189	175A	52	2925-294-2596	183A	
2920-484-0208	175A	43	2925-294-2596	212A	
2920-484-0289	175A	64	2925-295-1994	175D	101
2920-776-7469	175A	85	2925-295-1995	175D	36
2920-776-7470	175A	9	2925-301-0814	175A	28
2920-776-7484	175A	76	2925-302-9923	212A	198
2920-776-7507	175A	88	2925-312-8542	175D	95
2925-031-7440	E94	2	2925-321-1082	175A	22

STOCK NUMBER	FIGURE NUMBER	ITEM NUMBER	STOCK NUMBER	FIGURE NUMBER	ITEM NUMBER
2925-321-1162	175D	54	2925-603-6626	190	
2925-325-4372	212A	152	2925-603-6628	190	
2925-325-4374	212A	151	2925-605-5932	KITS	
2925-326-0531	175A	68	2925-605-5932	212A	
2925-326-4535	213	8	2925-605-5935	175	8
2925-326-4535	213B		2925-611-3910	KITS	
2925-327-9521	175		2925-611-3910	212A	
2925-328-2073	213		2925-613-9685	131	4
2925-333-0727	175A	41	2925-613-9685	132	30
2925-334-9524	175A	101	2925-624-8184	132	38
2925-336-8296	175D		2925-626-7443	138	
2925-338-4667	212A		2925-632-0562	175	
2925-370-9326	175A	62	2925-633-6859	213	
2925-370-9327	175A	81	2925-633-7221	176	67
2925-370-9667	212A	213	2925-635-6907	175D	28
2925-370-9679	212A	146	2925-639-6677	213	
2925-370-9679	212A	149	2925-646-7957	213	
2925-370-9681	212A	202	2925-654-3206	175A	
2925-370-9685	212A	199	2925-664-2522	212A	
2925-370-9686	212A		2925-671-4584	213	1
2925-370-9687	212A	208	2925-671-4584	213A	
2925-370-9691	212A	3	2925-674-6979	138	
2925-370-9694	212A	200	2925-684-2356	175	
2925-370-9712	212A	203	2925-684-2988	213	
2925-373-8672	175		2925-698-4579	212A	58
2925-373-8672	175A		2925-698-4591	213A	11
2925-373-8688	175		2925-701-9991	213	
2925-373-8688	175A		2925-705-3679	212A	15
2925-373-8810	212A	35	2925-708-5443	175	
2925-373-8824	212A	140	2925-708-5443	175D	
2925-373-8831	212A	187	2925-708-5444	175	
2925-373-8834	212A	133	2925-708-8334	213A	12
2925-373-8835	212A	131	2925-710-6155	KITS	
2925-373-8837	212A	122	2925-710-6155	175A	
2925-388-8932	175A	78	2925-710-6157	KITS	
2925-394-2332	212A	147	2925-710-6157	175A	
2925-440-1769	213		2925-710-6158	KITS	
2925-440-1769	BULK		2925-710-6158	175A	
2925-441-6027	175A	55	2925-730-2095	213	7
2925-441-6239	175A	53	2925-732-8906	E93	
2925-441-6239	175A	87	2925-732-8906	183A	
2925-441-6249	175A	93	2925-732-8906	212A	214
2925-441-6260	175A	1	2925-733-3516	213	
2925-441-6284	175A	59	2925-733-8573	175D	85
2925-441-6361	175A	72	2925-733-8627	175A	48
2925-441-8221	175D	75	2925-733-8628	175A	8
2925-441-8255	175D	86	2925-733-8636	175A	74
2925-441-8316	175D	31	2925-737-6476	175	
2925-441-8323	175D	32	2925-737-6476	KITS	
2925-442-0674	212A	111	2925-737-6476	175D	
2925-442-0675	212A	107	2925-740-7029	212A	223
2925-442-0826	212A	110	2925-753-9409	11D	36
2925-442-0827	212A		2925-753-9409	11D	64
2925-442-0828	212A		2925-776-1988	KITS	
2925-483-9878	175A	16	2925-776-1988	213B	
2925-484-0145	175A	50	2925-799-3236	175A	66
2925-504-3665	212A	153	2925-839-8234	E93	
2925-523-6944	A15	5	2925-839-8234	212A	218
2925-523-6945	A15	6	2925-841-0187	139	23
2925-523-7102	212A	55	2925-859-8579	213	
2925-523-7111	212A	117	2925-860-0600	206	
2925-533-5978	175D	17	2925-875-6453	175D	21
2925-548-8124	175A	14	2925-927-3591	212A	
2925-554-4823	212A	222	2925-927-3592	212A	64
2925-555-5349	129	26	2925-927-3593	212A	65
2925-555-5349	138	19	2925-927-3594	212A	
2925-561-5028	128	9	2925-927-3596	212A	68
2925-562-9867	213		2925-927-3597	212A	162
2925-574-8796	175A	24	2925-927-3597	212A	173
2925-599-6350	212A	221	2925-927-5758	212A	
2925-603-6624	190	23	2925-927-5759	212A	

STOCK NUMBER	FIGURE NUMBER	ITEM NUMBER	STOCK NUMBER	FIGURE NUMBER	ITEM NUMBER
2925-927-5760	212A		2995-335-7146	76B	17
2925-927-5761	212A	67	2995-336-0382	70	10
2925-927-5762	212A		2995-370-7855	176	
2925-927-5763	212A		2995-370-7856	176	30
2925-927-5787	212A		2995-446-4768	169	17
2925-927-5788	212A		2995-507-1123	55	3
2925-928-6320	212A		2995-560-5356	56	
2925-929-0996	212A		2995-560-5357	67	22
2925-929-0997	212A		2995-560-5359	67	3
2925-929-0998	212A		2995-560-5360	67	9
2925-934-8381	175A	83	2995-560-5363	65	1
2925-934-8383	212A		2995-560-5364	56	77
2925-957-7329	212A	201	2995-560-5366	73	9
2925-959-6144	212A		2995-560-5367	73	7
2925-979-3621	175A		2995-560-5368	56	108
2925-980-0231	175A	25	2995-560-5382	56	40
2925-980-5748	212A	154	2995-573-3982	56	3
2925-980-5749	212A	166	2995-576-8110	74	19
2925-991-6997	212A		2995-576-8110	75	32
2925-992-2508	212A	87	2995-604-9819	176	54
2925-994-8684	25		2995-612-1553	75	
2935-028-0228	74	14	2995-613-9688	56	
2935-028-0228	75	25	2995-622-6001	55	37A
2935-141-9332	83	14	2995-632-2844	56	93
2935-294-1543	74		2995-632-9181	76	9
2935-294-1919	84	21	2995-632-9181	76B	
2935-315-6031	74		2995-632-9363	75	24
2935-318-5703	84		2995-654-8939	55	
2935-328-2276	74		2995-754-7433	169	4
2935-332-6573	74		2995-765-5527	76	
2935-332-6573	74	63	2995-765-5527	76B	
2935-332-6573	75	76	2995-765-5527	KITS	
2935-508-6096	74		2995-765-5528	76	
2935-570-4196	74		2995-765-5528	76B	
2935-671-5295	74		2995-765-5528	KITS	
2935-691-6005	74		2995-766-8662	76	
2935-691-6006	74		2995-766-8662	KITS	
2935-695-4159	84		2995-774-7455	205	18
2935-697-5628	74		2995-830-5699	169	
2935-715-2290	74		2995-830-5707	169	
2935-715-2290	75		2995-911-3706	67	21
2935-715-2290	KITS		2995-945-2160	74	20
2935-715-2291	74		2995-945-2160	75	33
2935-715-2291	75		3020-277-1119	56	31
2935-715-2291	KITS		3020-277-1119	56	67
2935-767-8069	74		3020-277-1119	66	11
2935-767-8069	75		3020-277-1123	101	54
2935-767-8069	KITS		3020-277-1123	101	92
2940-353-9192	28	10	3020-277-1123	105	56
2940-353-9196	28	15	3020-277-1123	105	59
2945-332-5399	211	18	3020-277-1123	105	64
2945-654-1480	170	43	3020-287-7919	59	5
2945-790-3902	211		3020-287-7919	60	11
2945-790-3902	183A		3020-287-7919	61	12
2945-790-3939	211		3020-287-7919	61	3
2945-854-5467	211	4	3020-287-7919	67	18
2945-878-7385	211	7	3020-287-7919	69	2
2995-024-6472	176	25	3020-287-7919	108	21
2995-024-6473	176	32	3020-287-7919	108	28
2995-025-2244	32	48	3020-287-7919	108	4
2995-079-8956	169	70	3020-288-3411	56	106
2995-098-2214	76B	18	3020-288-3411	56	24
2995-213-6989	176	29	3020-288-3411	56	32
2995-304-6620	176	20	3020-288-3411	56	42
2995-307-6209	174	18	3020-288-3411	65	7
2995-327-3888	71	10	3020-288-3411	66	6
2995-327-3891	70	19	3020-288-3411	152	11
2995-327-3895	55	90	3020-288-3411	169	74
2995-327-3896	55	95	3020-288-5026	113E	85
2995-332-3517	62	14	3020-533-3496	114C	
2995-332-3519	62	24	3020-542-0530	60	7

STOCK NUMBER	FIGURE NUMBER	ITEM NUMBER	STOCK NUMBER	FIGURE NUMBER	ITEM NUMBER
3030-528-3944	83	10	3110-142-4476	21	60
3030-528-3944	84	15	3110-142-4485	107	23
3040-739-4896	175E	38	3110-142-4486	93	10
3040-948-3215	113F	104	3110-142-4486	93	23
3110-018-4036	23	25	3110-142-4490	88	
3110-067-6405	165		3110-143-3034	55	
3110-068-8119	41	13	3110-144-8522	125B	34
3110-068-9395	165	31B	3110-144-8666	125A	93
3110-100-2359	175A	35	3110-144-8840	BULK	
3110-100-6147	17		3110-144-8870	175D	76
3110-100-6147	103		3110-144-8989	123B	47
3110-100-6149	188	29	3110-151-8179	113F	247
3110-100-6149	175E	12	3110-151-9149	28	
3110-100-6168	28	16	3110-155-8418	133	
3110-108-9196	175A		3110-155-8425	125A	107
3110-112-5892	13	12	3110-155-9590	90A	27
3110-112-5892	13	9	3110-155-9590	90A	43
3110-112-5892	14	13	3110-155-9623	113E	
3110-112-6012	97	33	3110-155-9623	113E	256
3110-120-3089	178	4	3110-155-9630	114F	77
3110-120-3089	BULK		3110-155-9634	114H	69
3110-120-3102	104	58	3110-155-9634	114J	56
3110-142-4277	95	12	3110-155-9635	114H	50
3110-142-4277	96	12	3110-155-9635	114J	38
3110-142-4277	96	3	3110-156-7522	125B	32
3110-142-4277	106	59	3110-157-0455	113F	248
3110-142-4312	96	38	3110-158-6298	91	19
3110-142-4312	96	4	3110-158-6298	91	22
3110-142-4312	106	13	3110-158-6298	153	12
3110-142-4314	97	31	3110-158-6298	159	19
3110-142-4314	101	33	3110-159-1632	55	57
3110-142-4314	105	14	3110-159-1634	68	10
3110-142-4314	106	118	3110-159-1636	169	27
3110-142-4316	98	20	3110-159-1636	169	30
3110-142-4316	98	7	3110-159-1636	169	40
3110-142-4316	99	5	3110-159-1636	169	43
3110-142-4326	97	27	3110-159-1652	97	10
3110-142-4330	158	43	3110-159-9153	113E	248
3110-142-4453	55	96	3110-159-9153	113E	279
3110-142-4453	55	98	3110-173-5072	100	16
3110-142-4456	56	74	3110-173-5075	55	43
3110-142-4456	69	14	3110-173-5075	55	53
3110-142-4456	71	13	3110-173-5075	55	74
3110-142-4456	73	5	3110-173-5075	55	82
3110-142-4456	105	41	3110-173-5075	55	87
3110-142-4456	169	53	3110-173-5075	169	93
3110-142-4456	169	54	3110-173-5077	55	83
3110-142-4456	169	69	3110-183-9175	200	44
3110-142-4456	169	72	3110-183-9175	79A	13
3110-142-4461	88	19	3110-183-9772	113E	252
3110-142-4461	89	7	3110-183-9858	87	
3110-142-4461	97	11	3110-183-9969	84	
3110-142-4461	101	51	3110-183-9969	175A	90
3110-142-4461	153	15	3110-186-0961	BULK	
3110-142-4464	70	20	3110-190-9385	169	55
3110-142-4464	87	119	3110-198-0129	114J	
3110-142-4464	97	21	3110-198-0338	21	18
3110-142-4464	105	58	3110-198-1010	55	64
3110-142-4464	105	62	3110-198-1010	62	17
3110-142-4466	41	17	3110-198-1010	62	4
3110-142-4466	102	27	3110-198-1010	62	9
3110-142-4468	19	18	3110-198-1050	78A	6
3110-142-4468	21	26	3110-198-1264	55	44
3110-142-4468	21	29	3110-198-1264	68	13
3110-142-4468	21	55	3110-198-2168	165	31A
3110-142-4468	21	58	3110-198-2844	90A	12
3110-142-4470	93	34	3110-208-3363	157	18
3110-142-4472	72	5	3110-227-2800	97	13
3110-142-4472	72	9	3110-227-2885	113F	226
3110-142-4472	107	24	3110-227-3430	19	21
3110-142-4476	21	31	3110-227-3497	11D	35

STOCK NUMBER	FIGURE NUMBER	ITEM NUMBER	STOCK NUMBER	FIGURE NUMBER	ITEM NUMBER
3110-227-3497	11D	65	3110-555-6803	113E	273
3110-227-3498	113F	142	3110-563-9892	56	
3110-227-3501	113F	163	3110-566-8872	157	19
3110-227-4217	212A	145	3110-580-0704	158	24
3110-227-4283	212A		3110-580-1124	38	69
3110-227-4283	212A	211	3110-585-3372	25	
3110-227-4431	104	20	3110-585-3684	23	24
3110-227-4431	104	52	3110-585-3685	23	29
3110-227-4431	104	80	3110-585-3686	24	
3110-227-4431	104	96	3110-585-3686	24	30
3110-227-4492	212A	150	3110-592-2159	100	45
3110-227-4667	20		3110-603-1697	113E	208
3110-227-4950	113E	265	3110-605-0033	79A	59
3110-271-0011	93	21	3110-605-0033	79A	61
3110-271-0011	93	24	3110-606-1050	113E	176
3110-271-0011	93	9	3110-620-2820	25	65
3110-271-0042	178		3110-624-3486	16	92
3110-271-0042	178	63	3110-624-3487	16	60
3110-271-0112	175A	45	3110-624-3488	16	91
3110-271-0114	114Q	61	3110-624-3489	16	93
3110-275-0044	25		3110-624-3490	158	65
3110-275-0110	107	77	3110-624-3491	158	64
3110-275-0112	158		3110-624-3492	16	43
3110-275-0136	23		3110-624-3493	16	40
3110-275-0137	93	3	3110-624-3493	16	41
3110-275-0137	93	42	3110-624-3494	25	89
3110-275-0210	23		3110-624-3494	158	58
3110-275-0245	27		3110-624-3495	25	84
3110-277-0256	125A	55	3110-624-3495	158	57
3110-277-0304	188		3110-624-3496	20	10
3110-277-0305	188		3110-624-3496	20	11
3110-277-0317	186		3110-624-3497	20	5
3110-277-0475	133		3110-624-3497	20	7
3110-277-0782	113E		3110-624-3500	158	88
3110-278-6941	96	40	3110-624-3501	158	87
3110-278-7157	133	16	3110-624-3502	26	18
3110-286-1221	128A	92	3110-624-3502	26	31
3110-289-6908	188		3110-624-3503	26	17
3110-293-8267	BULK		3110-624-3503	26	30
3110-506-1605	55	31	3110-624-3504	158	85
3110-506-1605	55	37	3110-624-3504	162B	13
3110-516-5413	44B	13	3110-624-3505	158	86
3110-516-5413	125A	124	3110-624-3505	162B	10
3110-516-5763	87	101	3110-624-3505	162B	5
3110-516-5763	87	115	3110-624-3506	27	13
3110-516-5763	87	127	3110-624-3507	27	11
3110-516-5763	87	131	3110-624-3508	27	14
3110-516-5763	87	137	3110-624-3509	27	17
3110-516-5763	87	145	3110-624-3510	25	88
3110-516-5763	87	156	3110-624-3511	25	87
3110-516-5763	87	21	3110-624-3616	25	
3110-516-5763	87	27	3110-624-3617	25	
3110-516-5763	87	43	3110-624-3618	25	
3110-516-5763	87	49	3110-624-3620	157	13
3110-516-5763	87	67	3110-624-3620	157	43
3110-516-5763	87	73	3110-624-3621	156	20
3110-516-5763	88	6	3110-624-3622	82	
3110-516-5763	98	22	3110-624-3623	158	75
3110-516-5763	98	9	3110-624-3624	178	54
3110-516-5763	99	6	3110-624-3625	157	20
3110-516-5763	159	16	3110-624-3625	157	37
3110-516-5763	159	34	3110-624-3626	21	
3110-516-5763	159	4	3110-624-3628	18	
3110-516-5763	159	9	3110-626-9515	21	44
3110-516-5777	12		3110-626-9521	82	
3110-529-9453	38	28	3110-626-9521	151	30
3110-540-7680	113E	272	3110-626-9521	155	31
3110-542-0146	96	21	3110-627-7823	38	57
3110-542-0146	106	45	3110-627-7825	18	23
3110-542-9134	212A	220	3110-627-7827	18	24
3110-554-3379	90	16	3110-627-7831	25	51

STOCK NUMBER	FIGURE NUMBER	ITEM NUMBER	STOCK NUMBER	FIGURE NUMBER	ITEM NUMBER
3110-627-7831	25	52	3120-478-9500	187	10
3110-627-7831	25	62	3120-516-1803	178	10
3110-627-7831	25	63	3120-517-8417	BULK	
3110-627-7831	25	68	3120-525-1487	97	
3110-627-7831	25	70	3120-528-5637	170	38A
3110-627-7831	25	73	3120-528-6604	BULK	
3110-627-7833	25	48	3120-528-6605	BULK	
3110-627-7833	25	55	3120-528-6623	93	
3110-627-7835	25	56	3120-528-6624	153	23
3110-627-7837	25	75	3120-529-8377	105	13
3110-627-7837	25	77	3120-542-1202	88	
3110-680-5671	83A		3120-580-9991	93	12
3110-682-2394	56	89	3120-580-9991	93	17
3110-682-2394	90	11	3120-580-9991	93	26
3110-686-1347	175E	47	3120-580-9991	93	37
3110-686-1353	113F	139	3120-580-9991	102	23
3110-686-1363	123B		3120-580-9991	158	31
3110-686-1364	123B		3120-591-6792	25	15
3110-690-7297	96	31	3120-601-7314	188	
3110-690-7297	106	8	3120-627-2143	93	
3110-690-8683	56	88	3120-661-7390	116	
3110-690-8683	56	99	3120-661-7536	104A	3
3110-690-8683	56	99A	3120-662-0831	114G	51
3110-691-1357	114G	24	3120-662-0831	114H	52
3110-691-1357	114H	26	3120-662-0831	114J	40
3110-691-1357	114J	20	3120-662-0839	165	13
3110-694-2785	96	85	3120-662-0839	165	18
3110-694-2785	96	86	3120-662-0839	165	21
3110-701-0102	114E	46	3120-662-0839	165	24
3110-701-0102	114F	61	3120-662-1738	206	
3110-702-0561	123B	48	3120-662-1746	206	
3110-709-8614	68		3120-662-1752	206	
3110-731-4266	38	65	3120-662-1753	206	
3110-731-4266	38	68	3120-662-1754	206	23
3110-761-3726	123	66	3120-662-6989	152	13
3110-769-3573	84	42	3120-662-9211	BULK	
3110-779-9155	84	40	3120-682-2397	150	101
3110-791-5467	44C	21	3120-682-2397	150	97
3110-791-9847	114P	74	3120-682-2409	E57	
3110-791-9847	114P	84	3120-708-0081	101	34
3110-791-9847	114Q	64	3120-708-0082	101	35
3110-794-7284	186	9	3120-725-2962	87	
3110-852-0398	114E	61	3120-725-2962	93	11
3110-877-9576	162	40	3120-725-2962	93	16
3110-898-9744	188	5	3120-725-2962	93	25
3110-901-6349	114G	49	3120-725-2962	93	36
3110-926-4655	55	77	3120-725-2962	102	25
3110-926-4655	158	49	3120-776-7490	175A	67
3110-926-4655	159	12	3120-810-1964	158	32
3110-926-4655	159	37	3120-826-5618	162	58
3110-932-5189	188		3120-826-8541	128A	163
3110-932-5189	188	1	3120-826-8541	128A	93
3110-953-0243	175B	31	3120-826-8544	128A	162
3110-953-0243	175B	37	3120-850-2541	188	
3110-953-0245	114J		3120-881-1683	188	
3110-958-7325	85B	14	3120-925-8029	96	5
3110-969-8657	178		3120-957-2706	16	
3110-969-8657	178	14	3439-163-4363	BULK	
3110-992-1065	82	43	3439-178-8590	BULK	
3110-992-1065	151	30	3439-245-0234	BULK	
3110-992-1065	155	31			
3110-994-3280	114G	69	3439-268-9654	BULK	
3120-068-8121	154	125	3455-012-2262	E57	8
3120-068-8121	154	130	3455-012-2265	E57	2
3120-086-8127	128A	91	3455-012-2277	E57	
3120-098-4772	188	9	3455-018-5334	E45	5
3120-286-4305	188		3455-018-5337	E45	
3120-286-4306	188		3455-021-3642	E45	
3120-287-7933	36	14	3455-033-0527	E38	7
3120-287-7933	36	8	3455-033-4936	E68	3
3120-478-8899	203	4	3455-037-7292	E74	1

STOCK NUMBER	FIGURE NUMBER	ITEM NUMBER	STOCK NUMBER	FIGURE NUMBER	ITEM NUMBER
3455-212-2633	E15	5	4010-894-2593	BULK	
3455-212-2634	E15		4010-926-4601	58	
3455-212-2635	E15		4020-247-1737	BULK	
3455-212-2636	E15		4020-298-3394	F1	2
3455-212-2639	E15		4020-555-8334	BULK	
3455-398-2996	E48	7	4030-273-3081	122	28
3455-398-3046	E10	5	4030-273-3087	108	34
3455-398-3048	E71	2	4030-303-6359	56	59
3455-516-3744	E87	3	4030-641-0321	F1	3
3455-516-3746	E87		4130-489-0107	85B	24
3455-517-5492	E68		4140-631-3411	83	26
3455-528-3379	E68	1	4140-631-3411	84	30
3455-528-3381	E70	1	4140-640-5784	83	
3455-529-4438	E75	3	4140-640-5784	84	
3455-571-5703	E77	1	4140-640-5784	84	
3455-571-5704	E65	3	4140-654-9146	123B	21
3455-571-5706	E78	1	4140-716-4647	84	39
3455-684-3607	E81	2	4140-723-5803	84	36A
3455-684-3748	E39		4140-723-5804	84	37
3455-684-3752	E39	5	4210-555-8837	115	48
3460-012-2285	E57	3	4210-708-0031	115	
3460-033-4588	E41		4210-906-6768	115	
3460-091-5774	E75	4	4240-673-5679	125	
3460-091-5776	E52	7	4320-031-7399	175C	12
3460-144-5261	E38	1	4330-033-4783	32	207
3460-169-7791	E70	5	4330-033-4783	144	122
3460-169-7792	E45	1	4330-033-4783	145	185
3460-212-3929	E36	6	4330-252-0592	34	28
			4330-252-0592	149	27
3460-546-8704	E79	1	4330-512-5239	32	163
3460-684-3777	E80	6	4330-512-5239	35	35
3940-624-8206	122	17	4330-517-7776	32	161
3940-624-8206	122	21	4330-517-7776	35	33
3940-624-8281	122	37	4330-517-7776	144	13
4010-058-2321	117	13	4330-517-7776	145	27
4010-058-2321	117	72	4440-476-1460	139	
4010-058-2321	118	105	4440-476-1460	KITS	
4010-058-2321	118	113	4520-610-6407	123A	18
4010-058-2321	118	131	4710-202-9731	BULK	
4010-058-2321	118	136	4710-277-3627	BULK	
4010-058-2321	118	153	4710-277-9870	BULK	
4010-058-2321	118	26	4710-278-6383	BULK	
4010-058-2321	118	31	4710-278-6398	BULK	
4010-058-2321	118	36	4710-278-7799	BULK	
4010-058-2321	118	53	4710-278-7803	BULK	
4010-058-2341	118		4710-278-8688	BULK	
4010-058-2341	118	63	4710-278-8726	BULK	
4010-563-9889	152		4710-278-8727	BULK	
4010-565-8491	101		4710-278-8731	BULK	
4010-566-2406	45		4710-278-8735	BULK	
4010-631-3788	45	4	4710-278-8740	BULK	
4010-631-3789	153	2	4710-278-8742	BULK	
4010-631-3809	44	47	4710-279-0894	BULK	
4010-631-3816	108	33	4710-279-0901	BULK	
4010-631-3817	152	6	4710-279-0917	BULK	
4010-631-3827	44	48	4710-279-0919	BULK	
4010-631-3835	101	130	4710-279-0921	BULK	
4010-631-3836	101	105	4710-279-0948	BULK	
4010-631-3837	101	67	4710-279-0955	BULK	
4010-631-3838	101	90	4710-279-0974	BULK	
4010-632-1194	57	30	4710-287-1467	BULK	
4010-632-1195	57	29	4710-287-1747	BULK	
4010-632-1196	58	13	4710-580-6126	BULK	
4010-632-1197	58	14	4710-933-4416	BULK	
4010-651-5487	182	2	4720-078-8704	144	119
4010-674-6983	141	20	4720-086-6845	41	
4010-852-9798	58		4720-141-9157	110	66C
4010-853-0680	57		4720-141-9157	111	23
4010-853-1207	57		4720-141-9157	111	24
4010-882-1646	56	18	4720-200-0423	111	20B
4010-894-2592	BULK		4720-200-0423	111	20C

STOCK NUMBER	FIGURE NUMBER	ITEM NUMBER	STOCK NUMBER	FIGURE NUMBER	ITEM NUMBER
			4730-033-4554	54	50
4720-274-9294	181		4730-033-4554	167	18
4720-289-2959	111	66A	4730-050-4203	14	11
4720-289-4870	162		4730-050-4203	15	8
4720-289-6161	110	66D	4730-050-4203	16	
4720-289-6161	111	22	4730-050-4203	16	34
4720-289-6161	111	71A	4730-050-4203	16	4
4720-289-6162	111	20A	4730-050-4203	16	53
4720-289-6314	144	30	4730-050-4203	16	7
4720-289-6346	32		4730-050-4203	19	10
4720-541-4104	176	72	4730-050-4203	19	28
4720-541-9243	32	126	4730-050-4203	21	20
4720-560-9976	181		4730-050-4203	21	48
4720-587-6301	174	7	4730-050-4203	162	56
4720-587-6302	174	3	4730-050-4205	13	
4720-589-3790	32		4730-050-4207	156	23
4720-593-3811	77		4730-052-7689	BULK	
4720-595-0460	167		4730-052-7691	BULK	
4720-595-2435	145		4730-052-9516	BULK	
4720-613-9694	123	9	4730-052-9517	BULK	
4720-618-8791	125	20	4730-052-9519	BULK	
4720-622-1594	109	5	4730-057-4553	85	25
4720-633-6493	77		4730-057-4553	162	27
4720-633-6988	174		4730-060-2852	BULK	
4720-684-0563	125	21	4730-061-0719	BULK	
4720-707-6900	11	16	4730-062-1174	170	6
4720-720-1165	32		4730-062-3968	BULK	
4720-736-0984	BULK		4730-062-6821	32	28
4720-738-8306	145	1	4730-062-6821	33	30
4720-738-8309	145	7	4730-062-6821	35	22
4720-778-8881	145	153	4730-062-7435	BULK	
4720-786-5274	32	184	4730-062-7436	BULK	
4720-786-5274	32	185	4730-080-1846	103	26
4720-786-5312	12	47	4730-080-1846	35A	34
4720-790-8099	32	34	4730-080-1847	34	1
4720-795-0592	77	12	4730-080-1847	149	33
4720-795-0595	32	151	4730-080-1847	BULK	
4720-815-6354	BULK		4730-080-1852	85B	22
4720-822-4894	84		4730-080-1852	BULK	
4720-857-1729	BULK		4730-082-5965	206	
4720-857-1730	BULK		4730-089-6303	BULK	
4720-857-1731	BULK		4730-096-5353	100	62
4720-857-1732	BULK		4730-098-4262	162	
4720-857-1733	76	17	4730-142-2060	123	59
4720-857-1734	BULK		4730-142-2167	77	5
4720-857-1735	BULK		4730-142-2167	123	52
4720-857-1736	BULK		4730-142-2167	145	45
4720-868-5799	144	140	4730-142-2167	145	63
4720-868-5799	181	6	4730-142-2167	146	25
4720-868-5828	11	3	4730-142-2167	146	29
4720-868-6978	74	70	4730-142-2167	147	10
4720-868-6978	75	86	4730-142-2167	147	2
4720-868-6979	167	12	4730-142-2167	147	6
4720-868-6980	11	8	4730-142-2167	148	3
4720-868-6985	173	29	4730-142-2167	148	8
4720-868-8462	125	19	4730-142-2167	BULK	
4720-875-1482	85	17	4730-147-2021	214A	114
4720-910-7518	84	3	4730-147-2021	214A	287
4720-916-2570	162	1	4730-147-6194	208	58
4720-916-2571	32	183	4730-165-4730	214A	421
4720-977-1069	81	41	4730-165-4731	214A	
4730-017-8659	BULK		4730-165-4732	214A	
4730-017-8660	BULK		4730-172-0010	21	49
4730-017-8661	BULK		4730-172-0010	38	21
4730-017-8846	BULK		4730-172-0010	38	50
4730-017-8887	BULK		4730-172-0010	38	63
4730-027-6594	BULK		4730-172-0015	16	77
4730-027-6595	20	13	4730-172-0028	20	12
4730-027-6595	81	84	4730-172-0049	184	12
4730-033-4554	54		4730-176-5492	207	29
4730-033-4554	54	25	4730-186-9951	74	71

STOCK NUMBER	FIGURE NUMBER	ITEM NUMBER	STOCK NUMBER	FIGURE NUMBER	ITEM NUMBER
4730-186-9951	75	87	4730-203-0373	184	33
4730-186-9961	76	8	4730-203-0373	190	37
4730-186-9962	173		4730-203-0373	198	11
4730-186-9962	174	16	4730-203-0373	206	36
4730-186-9997	32		4730-203-0373	207	13
4730-187-0839	174		4730-203-0373	208	5
4730-187-0840	BULK		4730-203-0721	79	166
4730-188-3509	76B	24	4730-203-0721	80	104
4730-188-3509	175B	38	4730-203-0721	81	87
4730-188-3509	175C	47	4730-203-2658	110	10
4730-188-3509	175E	24	4730-203-2658	110	68
4730-188-3509	175F	15	4730-203-2658	111	10
4730-188-3509	175G	7	4730-203-2658	BULK	
4730-188-3509	212A	60	4730-203-3831	145	59
4730-188-3509	214A	175	4730-203-3831	BULK	
4730-188-3509	214A	177	4730-203-3914	25	30
4730-188-3509	214A	198	4730-203-3914	157	27
4730-188-3509	214A	199	4730-203-3914	158	1
4730-188-3509	214A	201	4730-203-6973	206	10
4730-188-3509	214A	238	4730-203-7499	32	129
4730-188-3509	214A	353	4730-203-7720	BULK	
4730-188-3509	214A	354	4730-203-8143	173	27
4730-188-3509	214A	355	4730-221-2134	BULK	
4730-188-3509	214A	356	4730-222-1794	79A	9
4730-188-3509	214A	453	4730-222-9637	200	18
4730-188-3509	214A	480	4730-230-8710	181	
4730-188-3509	214A	481			
4730-188-3509	214A	482			
4730-188-3509	214A	483			
4730-188-3509	214A	496	4730-231-3905	BULK	
4730-188-3509	214A	497	4730-231-3908	174	17
4730-188-3509	214A	85			
4730-188-3509	214A	86			
4730-188-3509	214A	87	4730-231-3991	145	57
4730-188-3509	214A	88	4730-231-4009	175	
4730-188-3513	214A	90	4730-231-4013	123	
4730-188-3513	214A	91	4730-231-4013	BULK	
4730-188-3515	214A	89	4730-240-5905	11	9
4730-188-3516	184	16	4730-240-5905	74	76
4730-194-1044	145	108	4730-240-5905	75	92
			4730-240-5905	124	64
			4730-240-5905	114C	
4730-194-1114	BULK		4730-240-5905	114S	19
4730-194-1121	123		4730-274-3144	184	13
4730-196-9580	123	55	4730-277-2458	32	
4730-196-9580	208	72	4730-277-2458	33	
4730-196-9581	80	58	4730-277-5026	31	
4730-196-9581	81	46	4730-277-5055	35	21
4730-196-9584	31	25	4730-277-5055	81	
4730-196-9587	BULK		4730-277-5077	182	7
4730-197-2917	32	160	4730-277-5078	31	20
4730-197-2917	33	5	4730-277-5078	32	165
4730-197-2917	35	11	4730-277-5078	147	35
4730-197-2917	35	12	4730-277-5078	148	39
4730-197-2917	35	17	4730-277-5081	32	154
4730-197-2917	35	30	4730-277-5081	32	157
4730-197-2917	75		4730-277-5081	32	25
4730-197-2917	144		4730-277-5081	32	27
4730-197-2917	144		4730-277-5081	32	32
4730-197-2917	145		4730-277-5081	32	35
4730-197-2917	147		4730-277-5081	32	50
4730-197-2917	148		4730-277-5081	33	
4730-197-2917	BULK		4730-277-5081	33	16
4730-197-2919	83	9	4730-277-5081	33	29
4730-197-2919	84		4730-277-5081	35	
4730-197-2921	74		4730-277-5081	35	27
4730-197-2921	75		4730-277-5081	85	5
4730-197-2921	BULK		4730-277-5081	144	138
4730-200-0580	157	6	4730-277-5081	144	4
4730-202-8826	79	78	4730-277-5081	144	6
4730-202-9463	207	10	4730-277-5081	144	69

STOCK NUMBER	FIGURE NUMBER	ITEM NUMBER	STOCK NUMBER	FIGURE NUMBER	ITEM NUMBER
4730-277-5081	144	79	4730-277-6371	32	185D
4730-277-5081	145	26	4730-277-6371	32	203
4730-277-5081	147	17	4730-277-6371	32	40
4730-277-5081	148		4730-277-6371	32	44
4730-277-5081	148	18	4730-277-6371	33	25
4730-277-5081	148	19	4730-277-6371	54	22
4730-277-5081	148	40	4730-277-6371	54	46
4730-277-5082	28	20	4730-277-6371	85	
4730-277-5083	32		4730-277-6371	85	16
4730-277-5083	32	127	4730-277-6371	85	24
4730-277-5083	32	128	4730-277-6371	85	38
4730-277-5083	32	182E	4730-277-6371	97	4
4730-277-5083	32	183A	4730-277-6371	106	37
4730-277-5083	32	183B	4730-277-6371	144	109
4730-277-5083	33		4730-277-6371	144	120
4730-277-5083	147	16	4730-277-6371	144	123
4730-277-5083	147	18	4730-277-6371	144	141
4730-277-5083	147	25	4730-277-6371	144	59
4730-277-5083	147	30	4730-277-6371	144	84
4730-277-5083	147	31	4730-277-6371	144	94
4730-277-5083	147	32	4730-277-6371	144	99
4730-277-5083	147	34	4730-277-6371	145	154
4730-277-5083	148	11	4730-277-6371	145	173
4730-277-5083	148	12	4730-277-6371	145	183
4730-277-5083	148	6	4730-277-6371	147	14
4730-277-5084	181	24	4730-277-6371	147	22
4730-277-5358	50	148	4730-277-6371	148	27
4730-277-5358	50	152	4730-277-6371	162	13
4730-277-5358	145	111	4730-277-6371	165	8
4730-277-5358	145	115	4730-277-6372	17	16
4730-277-5358	145	51	4730-277-6372	144	29
4730-277-5358	146	34	4730-277-6372	181	7
4730-277-5358	BULK		4730-277-6372	BULK	
4730-277-5373	32	68	4730-277-6374	28	2
4730-277-5373	32	73	4730-277-6429	32	181C
4730-277-5373	32	90	4730-277-6429	32	182C
4730-277-5373	35	3	4730-277-6429	78	7
4730-277-5373	35	9	4730-277-6458	32	
4730-277-5373	110	58	4730-277-6836	32	183C
4730-277-5373	144	136	4730-277-6836	33	27
4730-277-5373	144	20	4730-277-6836	147	
4730-277-5373	144	62	4730-277-9386	74	
4730-277-5373	144	67	4730-277-9386	75	
4730-277-5373	145	140	4730-278-0375	BULK	
4730-277-5373	145	145	4730-278-0678	54	13
4730-277-5373	145	150	4730-278-0678	54	18
4730-277-5373	145	162	4730-278-0678	54	38
4730-277-5373	145	167	4730-278-0678	54	43
4730-277-5373	145	36	4730-278-0678	110	24
4730-277-5373	145	95	4730-278-0678	111	32
4730-277-5373	145	99	4730-278-0678	111	36
4730-277-5373	146	14	4730-278-0678	181	3
4730-277-5373	146	18	4730-278-0678	BULK	
4730-277-5373	146	22	4730-278-0682	145	60
4730-277-5373	146	16	4730-278-0682	BULK	
4730-277-5373	BULK		4730-278-2980	206	57
4730-277-6324	31	12	4730-278-2980	206	61
4730-277-6339	184	42	4730-278-3122	31	23
4730-277-6352	17	43	4730-278-3122	145	
4730-277-6352	96	131	4730-278-3423	175F	16
4730-277-6352	96	133	4730-278-3462	96	132
4730-277-6352	97	3	4730-278-3462	97	2
4730-277-6352	103	54	4730-278-3462	100	61
4730-277-6352	106	140	4730-278-3462	157	57
4730-277-6352	206	13	4730-278-3462	178	5
4730-277-6352	206	14	4730-278-3462	206	15
4730-277-6371	32		4730-278-3462	206	16
4730-277-6371	32	125	4730-278-3682	32	184C
4730-277-6371	32	181D	4730-278-3682	32	185C
4730-277-6371	32	182D	4730-278-3682	54	21
4730-277-6371	32	184D	4730-278-3682	54	49

STOCK NUMBER	FIGURE NUMBER	ITEM NUMBER	STOCK NUMBER	FIGURE NUMBER	ITEM NUMBER
4730-278-3682	162	18	4730-287-0288	145	166
4730-278-3682	BULK		4730-287-0288	145	35
4730-278-3683	32		4730-287-0288	145	94
4730-278-3683	33	26	4730-287-0288	145	98
4730-278-3683	173		4730-287-0288	146	13
4730-278-4646	76	6	4730-287-0288	146	17
4730-278-4698	BULK		4730-287-0288	146	21
4730-278-5006	85	64	4730-287-0288	148	15
4730-278-5006	162	22	4730-287-0288	BULK	
4730-278-5126	BULK		4730-287-0289	32	121
4730-278-5303	208	16	4730-287-0289	32	135
4730-278-5817	BULK		4730-287-0289	32	140
4730-278-5823	26		4730-287-0289	54	12
4730-278-5823	26	25	4730-287-0289	54	28
4730-278-6070	77	6	4730-287-0289	54	3
4730-278-6070	123	53	4730-287-0289	54	33
4730-278-6070	145	46	4730-287-0289	54	37
4730-278-6070	145	64	4730-287-0289	54	8
4730-278-6070	146	26	4730-287-0289	110	15
4730-278-6070	146	30	4730-287-0289	110	19
4730-278-6070	147	11	4730-287-0289	110	2
4730-278-6070	147	3	4730-287-0289	110	27
4730-278-6070	147	7	4730-287-0289	110	31
4730-278-6070	148	4	4730-287-0289	110	35
4730-278-6070	148	9	4730-287-0289	110	39
4730-278-6070	BULK		4730-287-0289	110	43
4730-278-8225	BULK		4730-287-0289	110	47
4730-278-8230	BULK		4730-287-0289	110	52
4730-278-8800	BULK		4730-287-0289	110	6
4730-278-9100	123	10	4730-287-0289	110	64
4730-278-9100	123	21	4730-287-0289	110	76
4730-278-9100	176	66	4730-287-0289	111	
4730-278-9100	176	71	4730-287-0289	111	18
4730-278-9105	11	19	4730-287-0289	111	2
4730-278-9383	77		4730-287-0289	111	27
4730-279-0122	22	8	4730-287-0289	111	39
4730-279-0122	76	3	4730-287-0289	111	43
4730-279-0122	174		4730-287-0289	111	47
4730-279-0122	182		4730-287-0289	111	51
4730-287-0064	74	6	4730-287-0289	111	55
4730-287-0064	79	74	4730-287-0289	111	59
4730-287-0067	79	114	4730-287-0289	111	6
4730-287-0067	79	61	4730-287-0289	111	64
4730-287-0067	79	67	4730-287-0289	111	69
4730-287-0067	80	93	4730-287-0289	111	74
4730-287-0067	81	76	4730-287-0289	111	82
4730-287-0067	BULK		4730-287-0289	111	86
4730-287-0095	78	17	4730-287-0289	122	26
4730-287-0267	BULK		4730-287-0289	124	19
4730-287-0271	74	5	4730-287-0289	124	73
4730-287-0271	79	73	4730-287-0289	144	101
4730-287-0285	79	113	4730-287-0289	144	32
4730-287-0285	79	60	4730-287-0289	144	46
4730-287-0285	79	66	4730-287-0289	144	54
4730-287-0285	80	92	4730-287-0289	144	87
4730-287-0285	81	75	4730-287-0289	145	104
4730-287-0288	32	67	4730-287-0289	145	119
4730-287-0288	32	72	4730-287-0289	145	124
4730-287-0288	32	76	4730-287-0289	145	129
4730-287-0288	32	84	4730-287-0289	145	134
4730-287-0288	32	89	4730-287-0289	145	30
4730-287-0288	35	2	4730-287-0289	145	68
4730-287-0288	35	8	4730-287-0289	145	72
4730-287-0288	110	57	4730-287-0289	145	76
4730-287-0288	144	135	4730-287-0289	145	80
4730-287-0288	144	61	4730-287-0289	145	84
4730-287-0288	144	66	4730-287-0289	145	89
4730-287-0288	145	139	4730-287-0289	148	24
4730-287-0288	145	144	4730-287-0289	162	10
4730-287-0288	145	149	4730-287-0289	162	67
4730-287-0288	145	161	4730-287-0289	162	71

STOCK NUMBER	FIGURE NUMBER	ITEM NUMBER	STOCK NUMBER	FIGURE NUMBER	ITEM NUMBER
4730-287-0289	173	16	4730-302-8641	111	65
4730-287-0289	BULK		4730-302-8641	111	7
4730-287-0289	114S	21	4730-302-8641	111	70
4730-287-0290	50	147	4730-302-8641	111	75
4730-287-0290	50	151	4730-302-8641	111	83
4730-287-0290	145	110	4730-302-8641	111	87
4730-287-0290	145	114	4730-302-8641	122	27
4730-287-0290	145	50	4730-302-8641	124	20
4730-287-0290	146	33	4730-302-8641	124	74
4730-287-0290	BULK		4730-302-8641	144	102
4730-287-0292	BULK		4730-302-8641	144	33
4730-287-0295	BULK		4730-302-8641	144	47
4730-287-0297	144	19	4730-302-8641	144	55
4730-287-0540	83	3	4730-302-8641	144	88
4730-287-0540	84	4	4730-302-8641	145	105
4730-287-1024	23	14	4730-302-8641	145	120
4730-287-1024	BULK		4730-302-8641	145	125
4730-287-1027	84	12	4730-302-8641	145	130
4730-287-1032	215	7	4730-302-8641	145	135
4730-287-2345	214A	10	4730-302-8641	145	31
4730-287-2345	214A	11	4730-302-8641	145	41
4730-287-2345	214A	12	4730-302-8641	145	69
4730-287-2345	214A	9	4730-302-8641	145	73
4730-287-3053	BULK		4730-302-8641	145	77
4730-287-3712	18	26	4730-302-8641	145	81
4730-287-3712	BULK		4730-302-8641	145	85
4730-288-8054	184	27	4730-302-8641	145	90
4730-288-8054	198	28	4730-302-8641	148	25
4730-288-8054	206	12	4730-302-8641	162	11
4730-289-0786	76	19	4730-302-8641	162	68
4730-289-0786	76	58	4730-302-8641	162	72
4730-289-0786	79	77	4730-302-8641	173	17
4730-289-0788	74	10	4730-302-8641	BULK	
4730-289-0788	75	16	4730-323-4285	78	23
4730-289-0788	75	19	4730-324-1457	31	35
4730-289-2191	155	17	4730-328-4802	167	15
4730-289-3019	206	48	4730-329-7098	210	2
4730-289-3019	79A	19	4730-329-7115	79	
4730-289-3019	125A	5	4730-329-7116	78	
4730-289-3072	200	16	4730-334-7845	54	17
4730-289-3073	184	25	4730-334-7845	54	42
4730-289-4981	184		4730-334-7845	110	23
4730-289-5144	75	22	4730-334-7845	111	31
4730-289-5531	206	19	4730-334-7845	111	35
4730-289-5894	76	18	4730-334-7845	111	78
4730-289-5894	BULK		4730-334-7845	181	2
4730-289-6122	75	9	4730-334-7845	BULK	
4730-289-6448	25		4730-343-4335	103	27
4730-293-7391	190		4730-349-1848	17	9
4730-293-7391	207		4730-394-2468	83	
4730-293-7838	173	22	4730-394-2468	84	
4730-293-7992	190	59	4730-433-2582	BULK	
4730-302-8641	32	122	4730-433-2583	181	25
4730-302-8641	32	136	4730-449-0906	84A	6
4730-302-8641	32	141	4730-449-0906	84B	9
4730-302-8641	54	29	4730-449-0906	162A	3
4730-302-8641	54	34	4730-479-0148	210	35
4730-302-8641	54	4	4730-479-0477	200	14
4730-302-8641	54	9	4730-479-0482	184	
4730-302-8641	110	7	4730-483-7834	84A	18
4730-302-8641	110	77	4730-483-7834	84B	20
4730-302-8641	111		4730-483-7834	162A	20
4730-302-8641	111	19	4730-484-7878	214A	500
4730-302-8641	111	28	4730-484-8419	214A	18
4730-302-8641	111	3	4730-484-9342	214A	95
4730-302-8641	111	40	4730-484-9391	214A	92
4730-302-8641	111	44	4730-485-0670	214A	200
4730-302-8641	111	48	4730-486-5318	BULK	
4730-302-8641	111	52	4730-512-9848	184	
4730-302-8641	111	56	4730-516-2905	207	
4730-302-8641	111	60	4730-516-3001	209	5

STOCK NUMBER	FIGURE NUMBER	ITEM NUMBER	STOCK NUMBER	FIGURE NUMBER	ITEM NUMBER
4730-516-3004	198	25	4730-684-4363	206	17
4730-529-3278	104A	13	4730-684-6903	32	47
4730-529-4894	207	7	4730-684-6903	85	48A
4730-540-0392	181		4730-684-6903	85	52A
4730-540-0392	181	20	4730-684-6903	148	
4730-541-0780	83		4730-684-6903	BULK	
4730-541-3228	173	20	4730-684-6911	144	25
4730-541-8296	110	61	4730-684-6911	144	27
4730-541-8459	110	13	4730-684-6911	145	20
4730-541-8459	BULK		4730-684-6911	162	1C
4730-541-8997	77	11	4730-684-6913	76	1
4730-541-8997	77	14	4730-684-6913	174	20
4730-541-8997	110		4730-684-6914	79	116
4730-541-8997	111	16	4730-684-6914	79	63
4730-541-8997	162	1A	4730-684-6914	79	98
4730-554-7737	144	2	4730-684-6914	80	95
4730-554-7737	145	8	4730-684-6914	BULK	
4730-554-7737	181	22	4730-684-6915	32	101
4730-554-7738	83		4730-684-6915	32	30
4730-554-7738	84		4730-684-6915	32	56
4730-554-7738	144	8	4730-684-6915	32	60
4730-554-7738	145	5	4730-684-6915	32	65
4730-554-7738	181	15	4730-684-6915	32	70
4730-554-7831	BULK		4730-684-6915	32	87
4730-554-8139	184	28	4730-684-6915	32	92
4730-554-8139	207	6	4730-684-6915	32	97
4730-555-0883	BULK		4730-684-6915	35	18
4730-566-4291	79	88	4730-684-6915	35	26
4730-568-7438	167	13	4730-684-6915	35	5
4730-580-6361	207	8	4730-684-6915	76	53
4730-585-6749	200	15	4730-684-6915	80	69
4730-585-6749	207		4730-684-6915	81	47
4730-585-8529	74	9	4730-684-6915	96	125
4730-585-8529	75	15	4730-684-6915	96	127
4730-585-8529	75	18	4730-684-6915	110	60
4730-585-8769	74	15	4730-684-6915	144	118
4730-585-8769	75	27	4730-684-6915	145	142
4730-585-8769	208		4730-684-6915	145	152
4730-591-0656	83	8	4730-684-6915	145	164
4730-591-0656	84	10	4730-684-6915	145	169
4730-591-0659	BULK		4730-684-6915	145	25
4730-591-6564	103	53	4730-684-6915	35A	31
4730-595-0638	198		4730-684-6916	74	16
4730-595-0869	207	9	4730-684-6916	75	28
4730-595-2858	214A	166	4730-684-6917	32	181B
4730-595-3920	103	4	4730-684-6917	32	182B
4730-595-4505	80		4730-684-6917	32	182F
4730-611-7283	124	6	4730-684-6917	32	183D
4730-613-4867	128	22	4730-684-6917	32	184B
4730-613-9717	77		4730-684-6917	32	185B
4730-613-9751	181	27	4730-684-6917	BULK	
4730-633-6148	32		4730-684-6918	147	33
4730-633-6150	32	155	4730-684-6922	32	
4730-633-6150	32	26	4730-684-6922	33	18
4730-633-6150	32	33	4730-684-6922	33	19
4730-633-6150	32	51	4730-684-6922	123	73
4730-639-9023	76	25	4730-684-6922	145	
4730-639-9023	76	64	4730-684-6922	147	
4730-639-9023	BULK		4730-684-6922	148	
4730-640-1313	83		4730-684-6922	181	
4730-640-1313	84		4730-684-7075	30	
4730-640-1313	181	13	4730-684-7157	33	13
4730-640-5053	76	21	4730-684-7157	33	24
4730-640-5053	76	60	4730-684-7157	34	5
4730-640-5773	206	45	4730-684-7157	148	1
4730-640-5854	80	101	4730-684-7157	149	6
4730-640-6451	78		4730-684-7158	35	19
4730-676-1707	32	168	4730-684-7292	80	
4730-677-2227	17	22	4730-684-7292	BULK	
4730-677-2227	17	5	4730-684-7447	BULK	
4730-683-8454	77	27	4730-684-7450	32	152

STOCK NUMBER	FIGURE NUMBER	ITEM NUMBER	STOCK NUMBER	FIGURE NUMBER	ITEM NUMBER
4730-684-7450	181	17	4730-803-5049	144	
4730-684-7452	BULK		4730-803-5049	145	
4730-693-6910	162	26	4730-803-5049	BULK	
4730-698-4030	BULK		4730-803-5050	31	11
4730-715-0018	78	10	4730-803-5050	145	
4730-715-0018	124		4730-803-5050	147	
4730-720-1511	BULK		4730-803-5050	148	
4730-720-3960	144	64	4730-803-5050	BULK	
4730-720-3960	144	74	4730-803-5051	182	
4730-720-3960	145	92	4730-803-5051	182	10
4730-720-4482	147		4730-803-5051	BULK	
4730-720-4482	148		4730-804-1901	79	87
4730-720-4984	85		4730-804-1901	BULK	
4730-720-4984	85	61	4730-804-1932	32	
4730-720-4984	124	43	4730-804-1932	35	6
4730-720-4984	145		4730-804-1932	144	
4730-722-1207	32	124	4730-804-1932	144	
4730-722-1207	32	138	4730-804-1932	144	
4730-722-1207	85	44A	4730-804-1932	145	
4730-722-1207	110	50	4730-804-8683	33	
4730-722-1207	111	25	4730-804-8683	85	
4730-722-1207	111	62	4730-804-8684	33	28
4730-722-1207	144	44	4730-804-8684	148	
4730-722-1207	144	57	4730-805-0680	33	15
4730-722-1207	145	127	4730-805-0680	33	6
4730-722-7212	124	70	4730-805-0680	33	8
4730-722-7212	144	35	4730-805-0680	147	19
4730-722-7212	145	102	4730-805-0680	148	
4730-722-7212	145	122	4730-805-5100	32	169
4730-722-7216	174		4730-805-5100	181	10
4730-725-0100	32	181A	4730-809-5999	76	45
4730-725-0100	32	182A	4730-812-6431	33	
4730-725-0100	32	184A	4730-816-3487	BULK	
4730-725-0100	32	185A	4730-824-2044	25	30
4730-725-0100	148		4730-826-6460	BULK	
4730-725-0100	BULK		4730-826-7567	22	9
4730-725-0537	78		4730-828-1395	33	14
4730-725-4351	31	7	4730-828-1395	81	
4730-725-4351	32		4730-828-1395	110	55
4730-725-4351	32	206	4730-828-1395	148	28
4730-725-4351	32	43	4730-828-9981	77	38
4730-725-4351	80		4730-828-9981	77	43
4730-725-4351	81		4730-834-9560	12	56
4730-725-4351	85	15	4730-834-9560	32	14
4730-725-4351	85	56A	4730-834-9560	32	19
4730-725-4351	97	7	4730-834-9560	32	9
4730-725-4351	106	40	4730-834-9560	54	20
4730-725-4351	124		4730-834-9560	54	31
4730-725-4351	124	41	4730-834-9560	54	45
4730-725-4351	144		4730-834-9560	54	6
4730-725-4351	144		4730-834-9560	77	
4730-725-4351	144		4730-834-9560	85	18
4730-725-4351	162	16	4730-834-9560	85	29
4730-725-4351	165	7	4730-834-9560	85	40
4730-725-4351	BULK		4730-834-9560	96	129
4730-752-9336	173	31	4730-834-9560	124	17
4730-752-9336	BULK		4730-834-9560	124	22
4730-756-1937	33	7	4730-834-9560	124	49
4730-756-1937	80	59	4730-834-9560	124	55
4730-756-1937	148		4730-834-9560	144	104
4730-768-4703	200	32	4730-834-9560	144	139
4730-768-4703	207	44	4730-834-9560	144	85
4730-773-2600	173	33	4730-834-9560	145	107
4730-801-2369	145		4730-834-9560	145	87
4730-803-5049	11		4730-834-9560	162	2
4730-803-5049	32	187	4730-834-9560	BULK	
4730-803-5049	85		4730-837-0856	31	16
4730-803-5049	124		4730-837-0856	31	26
4730-803-5049	144		4730-837-0856	34	3
4730-803-5049	144		4730-837-0856	78	19
4730-803-5049	144		4730-837-0856	145	

STOCK NUMBER	FIGURE NUMBER	ITEM NUMBER	STOCK NUMBER	FIGURE NUMBER	ITEM NUMBER
4730-837-0856	149	31	4730-972-3250	85B	25
4730-837-0856	81A	4	4730-982-9736	BULK	
4730-837-0856	181A	73	4730-992-6529	169	24
4730-837-8169	17	3	4730-994-0883	79	
4730-841-5508	110		4730-995-7986	12	44
4730-842-2199	83	6	4810-768-0375	33	
4730-845-3502	33	35	4810-768-0375	KITS	
4730-845-3502	147	26	4810-769-1980	33	
4730-845-3502	148	13	4810-769-1980	KITS	
4730-866-1829	77	102	4820-203-3302	78	6
4730-866-1829	77	60	4820-289-1478	79	
4730-866-1829	77	67	4820-289-1478	80	64
4730-866-1829	77	97	4820-289-1478	81	48
4730-866-1829	BULK		4820-299-1045	175E	15
4730-877-5582	BULK		4820-299-1046	175E	19
4730-879-4071	BULK		4820-497-4648	85	63
4730-885-6381	178	1	4820-497-4648	162	23
4730-889-2283	BULK		4820-535-6483	85	26A
4730-889-2473	BULK		4820-535-6483	164	2
4730-952-5528	BULK		4820-535-6483	165	6
4730-952-5529	BULK		4820-541-4030	85	41
4730-952-5530	BULK		4820-580-8687	77	40
4730-952-5532	BULK		4820-580-8687	77	45
4730-952-5534	BULK		4820-633-0953	75	
4730-952-5535	BULK		4820-654-1523	75	
4730-952-5536	BULK		4820-654-3210	79B	
4730-958-8194	77	2	4920-010-5527	E27	4
4730-958-8194	144	11	4920-010-5528	E26	4
4730-958-8194	145	2	4920-010-5529	E27	3
4730-958-8194	181		4920-010-5530	E26	5
4730-958-8194	181	29	4920-010-5531	E27	6
4730-967-9511	BULK		4920-010-5534	E47	4
4730-967-9512	BULK		4920-010-5536	E69	
4730-967-9513	BULK		4920-010-5537	E69	
4730-967-9514	BULK		4920-010-5538	E40	6
4730-967-9515	BULK		4920-010-5539	E41	
4730-967-9516	BULK		4920-010-5540	E41	
4730-967-9517	BULK		4920-012-8939	E46	5
4730-967-9518	BULK		4920-012-8948	E88	
4730-967-9519	BULK		4920-012-8971	E68	7
4730-967-9521	BULK		4920-012-8977	E67	
4730-967-9522	BULK		4920-012-8983	E42	3
4730-967-9524	BULK		4920-012-8987	E63	8
4730-967-9525	BULK		4920-012-8991	E58	
4730-967-9526	BULK		4920-012-8997	E58	
4730-967-9527	BULK		4920-021-4962	E58	
4730-968-4719	20B		4920-028-1060	A12	7
4730-969-0605	110	11	4920-033-0723	E13	3
4730-969-0605	110	16	4920-033-0724	E13	
4730-969-0605	110	20	4920-037-3320	E92	2
4730-969-0605	110	28	4920-053-3928	E27	2
4730-969-0605	110	3	4920-066-0302	E86	
4730-969-0605	110	32	4920-066-0303	E86	
4730-969-0605	110	36	4920-066-0305	E86	
4730-969-0605	110	40	4920-072-9504	E14	5
4730-969-0605	110	44	4920-072-9505	E95	
4730-969-0605	110	48	4920-072-9506	E63	3
4730-969-0605	110	53	4920-072-9507	E93	
4730-969-0605	110	65	4920-072-9512	E49	6
4730-969-0605	110	69	4920-072-9515	E26	6
4730-969-0605	111	11	4920-072-9516	E40	3
4730-969-0605	111	79	4920-072-9517	E93	
4730-969-0605	BULK		4920-072-9518	E23	2
4730-969-0605	114S	20	4920-072-9519	E93	5
4730-969-6653	BULK		4920-072-9520	E95	
4730-969-6659	BULK		4920-073-3309	E50	4
4730-969-6665	BULK		4920-073-3310	E50	6
4730-969-6666	BULK		4920-073-3311	E51	2
4730-969-6668	BULK		4920-073-3312	E51	1
4730-969-6669	BULK		4920-073-3313	E51	3
4730-969-6670	BULK		4920-073-3314	E82	2

STOCK NUMBER	FIGURE NUMBER	ITEM NUMBER	STOCK NUMBER	FIGURE NUMBER	ITEM NUMBER
4920-073-3315	E83				
4920-073-3317	E30A		4920-144-5651	E50	1
4920-073-3318	E94	1	4920-144-5770	E69	3
4920-073-3319	E96	5	4920-144-5870	E88	5
4920-073-3321	E93	1	4920-144-5945	E30	2
4920-073-3322	E81		4920-168-4683	E32	7
4920-073-3323	E82	1	4920-204-2283	A17	4
4920-073-4440	E26	7	4920-212-2524	E3	4
4920-073-4441	E46	6	4920-212-2578	E12	
4920-073-4442	E47	1	4920-212-2579	E49	5
4920-073-5403	E51	4	4920-212-2580	E13	1
4920-073-5413	E48	5	4920-212-2668	E92	1
4920-073-5425	E39	3	4920-213-9399	E3	1
4920-073-5428	E67	4	4920-213-9400	E4	1
4920-073-6577	E39	1	4920-213-9415	E43	4
4920-073-6580	E48		4920-215-2321	E13	2
4920-073-9775	E53	4	4920-215-2323	E14	2
4920-073-9776	E53	5	4920-215-2326	E72	4
4920-073-9777	E53	2	4920-215-2327	E14	4
4920-073-9778	E54	1	4920-215-2328	E50	3
4920-073-9781	E55	1	4920-215-4304	A17	
4920-073-9784	E55	3	4920-216-7053	E28	3
4920-073-9785	E55	4	4920-302-6431	A9	
4920-073-9795	E54	5	4920-302-6436	A16	3
4920-074-1183	E48	2	4920-302-6442	A17	2
4920-074-1957	E57	5	4920-305-4956	E28	
4920-091-5729	E7	4	4920-306-5172	E96	1
4920-091-5747	E16	2	4920-306-5235	A11	4
4920-091-5751	E16	4	4920-310-2076	A10	
4920-091-5768	E72		4920-310-2077	A10	7
4920-091-6755	E31	2	4920-310-2078	A10	
4920-099-3517	A10	4	4920-310-2079	A10	8
4920-099-3524	A11	5	4920-313-7423	E14	7
4920-099-3525	A11	6	4920-318-1951	A17	5
4920-099-3529	A12	3	4920-319-4331	E17	
4920-099-3532	A12		4920-336-0283	E18	6
4920-099-3533	A12	6	4920-336-0284	E19	3
4920-099-3538	A13		4920-336-0285	E19	5
4920-099-3542	A14	1	4920-337-9928	E6	3
4920-099-3546	A14	5	4920-337-9929	E7	5
4920-099-3547	A14	6	4920-337-9930	E7	
4920-099-3547	A14	6	4920-337-9931	E8	3
4920-099-3550	A15	1	4920-337-9932	E8	4
4920-099-8267	E91	2	4920-337-9935	E9	3
4920-142-3924	E28	5	4920-337-9938	E19	2
4920-143-7888	E32	3	4920-337-9939	E10	1
4920-143-8001	E34	2	4920-343-0891	E1	
4920-143-8026	E34	6	4920-343-0892	E1	
4920-143-8038	E35	1	4920-343-0893	E1	
4920-143-8039	E35	2	4920-388-0438	A2	2
4920-143-8040	E35	3	4920-388-9277	E38	4
4920-143-8048	E35	4	4920-395-8347	E2	6
4920-143-8089	E87	9	4920-398-3008	E8	1
4920-144-2619	E87	8	4920-398-3009	E8	2
4920-144-2620	E88	7	4920-398-3010	E8	
4920-144-2621	E88	1	4920-398-3054	E56	4
4920-144-2632	E88	3	4920-398-3080	E11	5
4920-144-2649	E88	4	4920-398-3090	E11	7
4920-144-2672	E89	1	4920-398-3096	E12	
4920-144-5054	E35	7	4920-398-3118	E13	6
4920-144-5085	E36	3	4920-398-3184	E90	9
4920-144-5086	E36	2	4920-439-8878	E27	1
4920-144-5268	E38	3	4920-440-7991	E32	6
4920-144-5277	E38	5	4920-440-7997	E34	
4920-144-5365	E3		4920-440-8025	E34	4
4920-144-5406	E95		4920-440-8215	E6	4
4920-144-5529	E2	1	4920-440-8237	E7	1
4920-144-5530	E2	3	4920-440-8358	E7	6
4920-144-5561	E3	2	4920-440-8662	E11	1
4920-144-5626	E4	4	4920-440-8672	E56	5
4920-144-5627	E4	5	4920-442-1060	E30	4

STOCK NUMBER	FIGURE NUMBER	ITEM NUMBER	STOCK NUMBER	FIGURE NUMBER	ITEM NUMBER
4920-475-7882	A6	6	4920-633-0966	A6	
4920-490-6953	E34	1	4920-633-0967	A6	
4920-490-6956	E36	1	4920-653-5986	E63	
4920-490-7001	E4	3	4920-654-1388	A9	7
4920-490-7012	E5		4920-654-1524	A7	3
4920-490-7018	E6	1	4920-654-1525	A7	5
4920-490-7046	E7	7	4920-658-8438	A18	5
4920-490-7064	E8	5	4920-658-8439	A20	
4920-490-7067	E70		4920-671-8062	E22	3
4920-490-7075	E9	2	4920-674-1264	A21	3
4920-490-7101	E9	6	4920-678-4819	A20	3
4920-490-7111	E10	3	4920-690-7510	A25	3
4920-490-7112	E10	4	4920-696-6787	E32	2
4920-490-7123	E10	6	4920-696-6797	E32	
4920-490-7192	E11	6	4920-698-4211	E70	3
4920-490-7208	E12	4	4920-802-2678	E14	
4920-490-7209	E12	5	4920-802-2679	E73	1
4920-490-7210	E12		4920-802-2680	E16	8
4920-490-7254	E89	4	4920-802-2681	E16	
4920-490-7268	E90	8	4920-802-2686	E72	6
4920-490-7269	E90		4920-807-7830	E21	7
4920-490-7270	E90		4920-834-1448	E77	3
4920-490-7302	E91	3	4920-858-8429	E25	3
4920-497-7682	E7		4920-859-6137	E25	4
4920-522-1635	E29	7	4920-859-8048	E25	2
4920-534-0779	E12	3	4920-859-8049	E25	6
4920-535-1748	E8	6	4920-859-8050	E25	
4920-535-1795	A3	5	4920-874-7050	A23	4
4920-544-1095	E7		4920-888-9528	E34	7
4920-544-1119	E92	5	4920-888-9533	E18	4
4920-544-4723	A18	3	4920-888-9535	E20	6
4920-544-5410	E67	5	4920-897-8377	E25	5
4920-546-8706	E20	7	4920-945-9564	A1A	
4920-563-0873	E16		4920-946-6939	A1A	
4920-564-6653	E18	5	4920-946-6941	A1A	
4920-565-4903	A20		4920-946-6987	A1A	
4920-567-9371	A4	4	4920-946-7002	A1A	
4920-568-0476	E17		4920-946-7003	A1A	
4920-571-5707	E19	1	4920-955-9571	E19	6
4920-571-5743	E21	1	4920-961-1375	E20	5
4920-571-6226	A16	5	4920-962-8935	E86	
4920-571-6263	E21	2	4920-979-5632	E30	1
4920-572-7219	E21	3	4920-979-5633	E24	3
4920-573-7122	E21	4	4920-983-2464	E24	8
4920-573-8370	E20	3	4920-983-2465	E24	
4920-573-8371	E20	4	4920-983-2470	E24	
4920-574-7430	E21	6	4920-991-3280	A18	1
4920-575-1621	A1	2	4930-339-1165	A1	5
4920-589-1354	A11		4930-627-0215	12	
4920-591-2429	E80		4930-672-2011	A3	9
4920-600-3412	E41	1	5110-012-2245	E68	2
4920-604-5211	A21	1	5110-012-2250	E58	6
4920-605-1935	E19	4	5110-012-2251	E59	1
4920-605-3972	E20	2	5110-012-2252	E59	
4920-605-5936	A4	5	5110-012-2255	E59	
4920-611-3926	A24	6	5110-012-2257	E59	
4920-613-5426	A19	5	5110-012-2258	E59	
4920-623-5972	A17	3	5110-012-2259	E59	
4920-623-5974	A5		5110-012-2281	E93	3
4920-628-2568	A24		5110-033-4938	E68	4
4920-628-4267	E67		5110-065-8162	E88	6
4920-628-8231	E31	4	5110-212-2590	E67	3
4920-629-1622	A5		5110-329-6105	E85	6
4920-629-9775	A21		5110-395-8404	E12	8
4920-630-0989	A22	2	5110-395-8409	E13	5
4920-633-0095	A12	5	5110-395-8448	E91	
4920-633-0096	A13	3	5110-398-2998	E70	8
4920-633-0098	A17	1	5110-440-8154	E3	3
4920-633-0959	A6	2	5110-440-8446	E9	4
4920-633-0963	A23	1	5110-440-9220	E91	5
4920-633-0965	A6	4	5110-440-9221	E91	

STOCK NUMBER	FIGURE NUMBER	ITEM NUMBER	STOCK NUMBER	FIGURE NUMBER	ITEM NUMBER
5110-490-7059	E63	7	5120-091-5775	E54	2
5110-560-2452	E78		5120-091-5777	E75	5
5110-730-0777	E88	2	5120-091-5778	E53	1
5110-758-7311	A3	3	5120-091-5780	E54	6
5120-010-5556	E59		5120-091-5781	E76	3
5120-010-5557	E82	3	5120-092-8457	A7	1
5120-012-2288	E59	4	5120-092-8458	A7	2
5120-012-4662	E46	3	5120-096-5881	A7	4
5120-012-4665	E40		5120-096-5882	A18	
5120-012-4666	E58	2	5120-096-5884	A8	2
5120-012-4671	E54	3	5120-098-4426	E67	6
5120-012-9264	E4	6	5120-098-4484	E95	3
5120-021-9091	E23		5120-099-3523	A11	
5120-028-1646	E28	2	5120-099-3527	A12	1
5120-030-7934	A1A		5120-099-3540	A13	6
5120-030-7938	A1	3	5120-099-3544	A14	3
5120-030-7942	A23	6	5120-099-3551	A15	4
5120-033-0541	E33	1	5120-142-3931	E29	2
5120-033-0566	E34	9	5120-142-3940	E29	3
5120-033-0619	E1	2	5120-142-3949	E70	4
5120-033-0635	E65		5120-142-6630	E48	6
5120-033-0653	E6	6	5120-143-7891	E48	8
5120-033-0712	E66	8	5120-143-7892	E32	4
5120-033-0725	E13	4	5120-143-8022	E34	5
5120-033-0727	E2		5120-143-8116	E38	8
5120-033-0764	E64	7	5120-144-2588	E34	
5120-033-0776	E84	4	5120-144-2591	E50	2
5120-033-0817	E69	4	5120-144-2615	E42	6
5120-033-0839	E90	7	5120-144-2624	E84	5
5120-033-0841	E48	6A	5120-144-5045	E35	5
5120-034-3760	E60	2	5120-144-5049	E35	6
5120-034-3766	E42	2	5120-144-5194	E36	5
5120-034-3769	E47	6	5120-144-5260	E12	2
5120-034-3779	E57	4	5120-144-5299	E14	8
5120-034-3780	E44	1	5120-144-5395	E37	2
5120-034-3782	E50		5120-144-5397	E37	
5120-034-3784	E50		5120-144-5398	E37	
5120-034-3796	E60	3	5120-144-5419	E38	2
5120-034-3797	E66		5120-144-5464	E38	9
5120-034-3798	E95	1	5120-144-5471	E10	2
5120-034-3799	E43	2	5120-144-5478	E1	1
5120-034-3800	E43	3	5120-144-5483	E13	7
5120-034-3806	E47	5	5120-144-5508	E13	
5120-034-3818	E48	1	5120-144-5509	E13	
5120-037-7287	E73	3	5120-144-5528	E2	2
5120-037-7305	E94	5	5120-144-5625	E3	
5120-037-7315	E53	3	5120-144-5691	E94	3
5120-037-7318	E76	4	5120-144-5775	E87	1
5120-065-8142	E73	4	5120-144-5886	E85	2
5120-065-8146	E64	8	5120-144-5895	E43	1
5120-065-8147	E65	1	5120-144-5903	E96	3
5120-065-8148	E47	3	5120-144-5987	E49	3
5120-065-8150	E55	2	5120-168-4642	E65	6
5120-065-8151	E41	5	5120-168-6479	E37	5
5120-065-8152	E41		5120-169-7411	E45	3
5120-065-8153	E42	1	5120-169-7548	E92	4
5120-065-8154	E68	6	5120-169-7652	E42	5
5120-069-9612	A3	1	5120-169-7666	E9	5
5120-070-6192	E59	5	5120-169-7684	E65	2
5120-070-8427	E52	3	5120-169-7685	E9	7
5120-075-7408	E27	5	5120-169-7787	E60	1
5120-081-9055	A1	4	5120-169-7793	E45	2
5120-086-6692	E84	2	5120-169-7794	E45	
5120-091-5732	E15	1	5120-169-7795	E45	6
5120-091-5740	E61	1	5120-169-7826	E66	2
5120-091-5749	E89	8	5120-169-7946	E46	1
5120-091-5750	E89	9	5120-169-7958	E46	2
5120-091-5753	E55	6	5120-169-7970	E23	
5120-091-5767	E47	2	5120-189-7928	A3	
5120-091-5769	E8		5120-203-9530	E18	2
5120-091-5771	E52	1	5120-212-2521	E11	

STOCK NUMBER	FIGURE NUMBER	ITEM NUMBER	STOCK NUMBER	FIGURE NUMBER	ITEM NUMBER
5120-212-2523	E11		5120-566-2858	E89	7
5120-212-2560	E44	5	5120-566-2859	E89	6
5120-212-2585	E65	9	5120-566-5311	A19	2
5120-212-2629	E15	4	5120-568-0469	E71	3
5120-212-2657	E40	5	5120-570-7337	E41	
5120-212-2667	E56	1	5120-571-3620	A1	9
5120-212-3924	E30	5	5120-571-3924	E5	4
5120-212-3928	E30	6	5120-571-3925	E5	5
5120-212-3932	E31	1	5120-573-6362	E21	5
5120-213-9736	E70	2	5120-574-6055	E36	8
5120-215-2343	E16	3	5120-575-1664	E17	5
5120-215-2347	E65	5	5120-575-1665	E17	
5120-215-2352	E85	3	5120-589-1347	A9	3
5120-230-6392	E36		5120-589-1348	A9	6
5120-302-5857	A25	1	5120-589-1349	A10	6
5120-302-6433	A11	3	5120-589-1350	A13	1
5120-302-6437	A16	4	5120-589-1351	A13	2
5120-303-3516	A3	6	5120-589-1352	A13	4
5120-305-5179	E30	3	5120-590-8303	E31	5
5120-306-5181	E66	3	5120-591-0668	A19	3
5120-306-5187	E65	8	5120-595-8194	E91	4
5120-306-5188	E48	5A	5120-596-4095	E51	5
5120-306-5233	A4	1	5120-596-4407	A14	2
5120-308-3771	A25	2	5120-602-8567	A18	2
5120-313-7020	A9		5120-605-8990	A8	3
5120-330-5090	A2	4	5120-606-1755	A19	4
5120-330-5091	A7	6	5120-608-6414	A19	7
5120-330-6565	E17		5120-608-6415	A19	8
5120-330-6575	E18	3	5120-608-6416	A20	7
5120-331-5952	E17		5120-608-6417	A20	1
5120-336-3412	A11		5120-608-6591	A20	2
5120-339-0575	E77		5120-608-8086	E90	2
5120-341-4851	E18	1	5120-609-4346	A20	6
5120-345-3719	E5	3	5120-609-4348	A20	4
5120-348-4855	A2		5120-613-9356	E66	
5120-394-5224	A24	4	5120-613-9373	A24	3
5120-394-5408	A24	1	5120-613-9387	A17	4
5120-395-8511	E92	3	5120-624-7004	A1	8
5120-396-0155	E67	1	5120-626-1933	A1	
5120-398-2980	E4	7	5120-626-5122	F1	10
5120-398-4304	E29	5	5120-628-3942	E90	3
5120-398-4322	E77	2	5120-629-1733	A22	
5120-398-4323	E29	6	5120-629-4710	A9	4
5120-440-8084	E9	8	5120-629-4711	A22	
5120-440-8109	E14	9	5120-629-4712	A22	
5120-440-8158	E23	4	5120-629-4713	A22	
5120-440-8310	E49	2	5120-629-9784	A12	2
5120-440-8436	E9	1	5120-629-9787	A14	4
5120-440-8742	E12	1	5120-631-5766	A20	5
5120-449-3953	A2	1	5120-632-1238	A3	2
5120-490-7255	E85	4	5120-632-4325	A8	6
5120-490-7256	E89	5	5120-632-4326	A22	1
5120-490-7259	E90	4	5120-632-9434	A15	2
5120-490-7261	E90	5	5120-633-0971	A23	3
5120-490-7264	E90	6	5120-640-6776	E31	3
5120-490-7288	E91	1	5120-650-7076	A9	1
5120-490-7309	E91		5120-650-7077	A8	7
5120-490-7311	E85	5	5120-650-7079	A9	2
5120-506-8152	A4	2	5120-654-3237	A19	6
5120-506-8168	A4	3	5120-654-3241	A22	5
5120-511-0189	E44	3	5120-654-8927	E81	1
5120-511-0191	E78	6	5120-654-8995	E4	8
5120-511-0610	E28	6	5120-672-0414	A2	7
5120-511-0611	E29	1	5120-674-0346	E24	2
5120-535-5841	E29		5120-674-0347	E24	1
5120-540-0664	E96		5120-683-8614	A10	5
5120-544-4729	A18	4	5120-691-1022	A24	2
5120-555-0869	E22	4	5120-703-9682	39	19
5120-561-7142	A18		5120-704-7535	E33	2
5120-562-3173	A11	1	5120-708-0083	A1	
5120-566-2857	E89	3	5120-765-8715	A23	5

STOCK NUMBER	FIGURE NUMBER	ITEM NUMBER	STOCK NUMBER	FIGURE NUMBER	ITEM NUMBER
5120-767-2111	A22	3	5136-490-7151	E11	3
5120-769-3380	E17	2	5136-490-7154	E11	
5120-771-7178	A1A		5136-490-7155	E11	
5120-776-1292	E78	2	5136-490-7156	E11	
5120-786-5318	E28	1	5136-490-7160	E11	
5120-795-7244	E25	1	5136-490-7162	E11	
5120-909-4311	E33	4	5136-490-7165	E4	
5120-963-1149	E24	4	5136-490-7166	E11	
5120-979-5639	A13	5	5136-525-6882	E11	
5120-979-5655	A15	3	5136-596-1593	E22	
5120-980-0226	E83	2	5136-613-9357	E15	
5120-980-0227	E24	2	5136-618-3312	E22	
5120-980-0229	E83	1	5136-618-4695	E22	
5120-983-0501	E83		5136-671-2246	E22	
5120-983-2467	E24		5136-671-2249	E22	
5120-983-4060	A11	2	5136-671-2250	E22	5
5120-986-7205	A11	7	5136-671-2253	E22	
5120-986-7213	E37	6	5136-671-2254	E81	3
5120-988-5324	E87	7	5136-671-2256	E22	
5130-012-4711	E59	2	5136-671-2258	E22	
5130-142-0953	E82	4	5136-671-2259	E22	
5130-144-5735	E40	1	5136-671-2260	E22	6
5130-398-3210	E69	5	5136-671-2261	E22	
5130-398-3211	E69		5136-671-2262	E22	
5130-612-0602	E43	6	5136-671-2263	E22	
5130-612-0604	E43		5136-671-2264	E22	
5130-612-0629	E43		5136-671-2265	E22	
5133-012-4710	E58	5	5136-671-2266	E22	
5133-037-7293	E29A		5136-671-2267	E22	
5133-037-7296	E63		5136-671-2268	E22	
5133-037-7297	E63		5136-671-2269	E22	
5133-037-7298	E63	9	5136-671-2270	E22	
5133-037-7299	E63	11	5136-671-2271	E22	
5133-037-7300	E63	12	5136-671-2272	E22	
5133-037-7301	E63	10	5136-671-2273	E22	
5133-072-1996	E52	2	5136-671-2274	E22	
5133-072-1997	E52	4	5136-776-1305	E81	
5133-072-1998	E52	5	5136-776-1306	E39	
5133-142-1624	E53	6	5136-776-3683	E23	5
5133-143-7942	E1	4	5136-776-9509	E23	
5133-143-7997	E38		5136-808-2373	E11	
5133-143-8047	E63	4	5136-808-2374	E64	
5133-203-6884	E32	5	5136-808-2375	E11	
5133-203-6886	E32		5136-808-2376	E64	
5133-212-2637	E15		5136-808-2377	E11	
5133-212-2638	E15		5136-851-9627	E37	
5133-212-2640	E15		5136-859-8127	E26	1
5133-219-5890	E29A		5136-859-8128	E26	
5133-357-0130	E70	7	5136-859-8130	E26	
5133-377-7295	E29A		5136-861-4020	E56	3
5133-440-8055	E37	3	5210-012-4678	E45	4
5133-440-8441	E12		5210-012-9242	E17	
5133-490-7061	E63	5	5210-018-0204	E41	3
5133-490-7063	E63	6	5210-018-0206	E46	4
5133-541-4058	E68	5	5210-018-0210	E48	3
5133-574-5312	E57		5210-018-0213	E51	6
5133-574-5313	E57	9	5210-034-3770	E44	4
5133-574-5314	E57	7	5210-034-3824	E57	
5133-595-8257	E75		5210-034-3825	E57	6
5133-596-6251	E96		5210-070-6815	E86	3
5133-621-7536	E79	3	5210-098-4713	E16	
5133-730-3096	E20	1	5210-098-4714	E61	2
5133-895-0424	E79		5210-098-4715	E16	
5136-012-4677	E59	3	5210-212-2625	E15	3
5136-144-5239	E36		5210-212-2644	E15	6
5136-174-6251	E4		5210-212-2645	E60	
5136-229-9285	E64	1	5210-217-3223	E73	5
5136-275-9698	E64		5210-217-3235	E17	
5136-275-9699	E64		5210-320-1948	E72	5
5136-277-6705	A5		5210-395-8416	E14	1
5136-277-6709	E64		5210-490-7213	E12	7

STOCK NUMBER	FIGURE NUMBER	ITEM NUMBER	STOCK NUMBER	FIGURE NUMBER	ITEM NUMBER
5210-506-9454	E85	7	5220-267-3392	E87	
5210-545-9302	E14		5220-267-3394	E5	1
5210-584-3884	E60	6	5220-267-3395	E19	
5210-584-3886	E80	5	5220-267-3401	E37	
5210-611-2633	E79	2	5220-267-3405	E87	
5210-654-8914	E15		5220-267-3413	E76	1
5210-691-4881	E37		5220-267-4830	E87	
5210-795-1063	A24	6	5220-267-4831	E87	
5210-868-1095	E82		5220-267-4842	E29	
5210-868-1097	E83		5220-273-0274	E87	
5210-868-1098	E82		5220-278-1015	E60	5
5210-894-5196	A3		5220-278-1051	E54	4
5210-895-0427	E30A		5220-278-1052	E4	
5220-012-4680	E57	1	5220-278-1478	E87	
5220-012-4681	E39	4	5220-278-1479	E87	
5220-012-4682	E19		5220-289-8515	E74	
5220-012-4686	E19		5220-289-8516	E74	3
5220-012-4687	E19		5220-289-8517	E29A	
5220-012-9271	E61	3	5220-289-8518	E75	
5220-012-9350	E61	6	5220-289-8519	E74	5
5220-012-9358	E62	2	5220-300-3053	A16	1
5220-014-2053	E61	4	5220-316-6683	E49	
5220-014-2054	E58	3	5220-320-8158	E15	
5220-015-0486	E16		5220-335-0158	E78	3
5220-015-6938	E58	4	5220-440-8063	E87	
5220-015-6939	E58		5220-440-8065	E87	
5220-018-0208	E62	1	5220-440-8066	E37	4
5220-028-1778	E17	3	5220-440-8067	E87	
5220-031-6689	E5	2	5220-440-8068	E87	
5220-031-6756	E17	4	5220-440-8069	E87	
5220-034-3812	E96		5220-440-8070	E87	
5220-034-3813	E31	6	5220-440-8155	E20	8
5220-034-3814	E48	9	5220-440-8238	E87	
5220-034-3815	E29A		5220-440-8239	E87	
5220-034-3816	E76	2	5220-440-8335	E48	
5220-045-4505	E33	5	5220-440-8394	E87	
5220-053-3964	E86	7	5220-440-8396	E7	8
5220-053-3965	E86	6	5220-440-8400	E7	
5220-053-3966	E86	8	5220-440-8645	E87	
5220-053-3968	E86	5	5220-440-8793	E44	2
5220-070-6816	E58	1	5220-490-7013	E86	4
5220-083-7324	E27	7	5220-490-7060	E70	
5220-086-6691	E84	3	5220-490-7099	E71	1
5220-092-8530	E36	7	5220-490-7194	E71	4
5220-141-9386	E52	6	5220-490-7212	E12	6
5220-141-9696	E55	5	5220-506-8108	E16	
5220-142-6626	E87	4			
5220-142-7640	E87	6	5220-529-2800	E87	
5220-143-7962	E34	8	5220-529-2801	E77	
5220-143-8025	E27		5220-540-0838	E87	
5220-143-8062	E19	7	5220-546-3972	E87	5
5220-144-2564	E62		5220-560-0774	E30	7
5220-144-2585	E4	2	5220-560-0775	E79	5
5220-144-2614	E62	6	5220-568-0472	E16	
5220-144-2645	E84	6	5220-568-0474	E16	
5220-144-5320	E1	5	5220-572-7205	E77	
5220-144-5321	E1		5220-572-7206	E77	
5220-144-5329	E21	8	5220-572-7207	E77	
5220-144-5339	E2	4	5220-573-3620	E70	
5220-144-5611	E87		5220-588-6028	E22	2
5220-144-5781	E62	5	5220-595-4768	E87	
5220-144-5782	E87	2	5220-640-1484	E78	
5220-144-5880	E44	6	5220-640-1485	E76	
5220-202-5263	E19	8	5220-640-1486	E76	5
5220-202-8639	A9	5	5220-651-7849	E80	3
5220-212-3362	A24	5	5220-654-9104	E80	1
5220-217-3236	E15		5220-677-2854	E81	5
5220-267-3381	E87		5220-770-0051	E32	8
5220-267-3383	E63	1	5220-780-4419	E61	5
5220-267-3385	E60		5220-780-4420	E62	3
5220-267-3386	E60	4	5220-789-7835	E43	5

STOCK NUMBER	FIGURE NUMBER	ITEM NUMBER	STOCK NUMBER	FIGURE NUMBER	ITEM NUMBER
5220-859-6245	E26	2	5305-058-5049	105	17
5220-859-6246	E26		5305-059-3663	167	19
5220-859-6247	E26		5305-059-3663	173	23
5220-861-1591	E26	3	5305-059-3663	173	28
5220-861-1594	E26		5305-059-3663	173	34
5220-907-2263	A2	8	5305-059-4573	90A	8
5220-963-1113	E80	4	5305-059-8226	114E	112
5280-490-6944	E1	3	5305-059-8226	114E	18
5305-010-5137	156	5	5305-059-8226	114F	13
5305-012-4723	175D	25	5305-059-8226	114F	52
5305-013-1904	57	14	5305-059-8226	114G	
5305-014-0750	78A	2	5305-059-8226	114G	11
5305-014-2070	114S	56	5305-059-8226	114H	13
5305-022-5375	113F	217	5305-059-8226	114J	10
5305-025-8016	114E	101	5305-059-8248	47	13
5305-025-8016	114E	97	5305-059-8248	79A	
5305-025-8017	114E	34	5305-059-8248	79A	52
5305-025-8017	114F	30	5305-059-8248	81A	45
5305-030-7751	113E	172	5305-059-8248	BULK	
5305-033-0418	206	8	5305-059-8256	114H	1
5305-033-2189	181A	26	5305-059-8256	114J	1
5305-033-3270	113F	90	5305-059-8280	BULK	
5305-033-3271	113A	24	5305-059-8670	115	58
5305-033-3271	113A	7	5305-059-8807	BULK	
5305-033-3271	114R	16	5305-060-5752	BULK	
5305-033-3271	114R	5	5305-060-5753	BULK	
5305-033-3501	113F	69	5305-060-7900	113	
5305-033-6173	114A	3	5305-060-7900	114	
5305-033-6174	114A	51	5305-060-7900	114	
5305-033-6174	114C	86	5305-063-3503	37	2
5305-033-6174	114L	31	5305-066-7324	41	
5305-034-3794	114L	7	5305-067-7792	212A	12
5305-038-2052	113E	167	5305-067-7792	212A	174
5305-042-0535	113F	203	5305-067-9862	BULK	
5305-044-4181	144	143	5305-068-0485	82	61
5305-044-4181	BULK		5305-068-0522	BULK	
5305-045-3180	79	18	5305-068-9191	BULK	
5305-045-3180	79	26	5305-079-1159	130	
5305-045-3180	79	38	5305-079-1159	132	145
5305-045-3180	79	48	5305-079-1159	133	11
5305-045-3180	157	31	5305-079-1159	139	
5305-045-3180	158	8	5305-083-2051	79A	58
5305-045-3180	BULK		5305-083-2051	81A	54
5305-049-6384	113C	44	5305-088-1939	113B	114
5305-050-4043	113F	211	5305-088-3543	214A	173
5305-051-2352	BULK		5305-090-0571	113E	13
5305-052-3537	BULK		5305-090-0571	113E	14
5305-052-5946	114E	104	5305-090-2080	212A	28
5305-052-5946	114G	115	5305-090-2080	212A	48
5305-052-5946	114H	110	5305-090-2232	113E	165
5305-052-5946	114J	95	5305-090-2232	113E	189
5305-052-5967	109	13	5305-090-2232	113E	194
5305-052-5968	113		5305-093-5615	113F	205
5305-052-5968	114		5305-095-4196	175F	19
5305-052-9501	113		5305-095-8435	114B	73
5305-052-9501	114		5305-095-8435	114D	81
5305-052-9956	123	25	5305-096-1427	113E	184
5305-052-9956	BULK		5305-096-1614	113C	5
5305-052-9957	123	38	5305-096-1636	113C	7
5305-052-9971	BULK		5305-119-9643	208	21
5305-052-9977	BULK		5305-141-8469	114L	8
5305-053-1111	175A	40			
5305-053-1114	122	3			
5305-053-1117	175D	84			
5305-053-1118	BULK		5305-144-3828	33	37
5305-054-5646	BULK		5305-144-3828	118	
5305-054-6670	172	92	5305-144-3828	124	14
5305-057-9612	137				
5305-057-9613	123	43			
5305-057-9613	123	46			
5305-057-9613	123	49			

STOCK NUMBER	FIGURE NUMBER	ITEM NUMBER
5305-144-3928	115	22
5305-144-3933	145	175
5305-144-3996	175E	25
5305-144-4066	114E	74
5305-144-4066	114G	100
5305-144-4066	114G	90
5305-144-4066	114H	90
5305-144-4066	114H	96
5305-144-4066	114J	75
5305-144-4066	114J	81
5305-145-6917	114E	79
5305-145-6917	114E	95
5305-145-6917	114F	38
5305-145-6917	114F	64
5305-145-6917	114F	95
5305-145-6917	114G	108
5305-145-6917	114G	121
5305-145-6917	114G	73
5305-145-6917	114H	104
5305-145-6917	114H	73
5305-145-6917	114J	59
5305-145-6917	114J	89
5305-145-6921	114E	49
5305-145-6921	114F	86
5305-145-6921	114G	52
5305-145-6971	34	27
5305-145-6971	39	17
5305-145-6971	101	21
5305-145-6971	11D	33
5305-145-6971	11D	5
5305-145-6971	11D	56
5305-145-6971	11D	8
5305-145-6971	116	31
5305-145-6971	149	23
5305-145-6971	178	19
5305-145-6971	79A	21
5305-145-6971	81A	7
5305-145-6971	175A	
5305-145-7011	58	18
5305-145-7011	78	36
5305-145-7011	106	34
5305-145-7012	100	31
5305-145-7012	79B	3
5305-145-7012	175A	96
5305-145-7013	BULK	
5305-145-7014	94	5
5305-145-7014	BULK	
5305-145-7016	18	1
5305-145-7016	58	25
5305-145-7016	78	33
5305-145-7016	11D	16
5305-145-7016	11D	37
5305-145-7016	149	20
5305-145-7016	123B	8
5305-145-7017	78	15
5305-145-7017	78	24
5305-145-7017	78	30
5305-145-7017	92	4
5305-145-7017	125A	62
5305-145-7017	175B	28
5305-145-7017	175C	35
5305-145-7018	18	
5305-145-7018	175H	31
5305-145-7018	214A	221
5305-145-7018	214A	271
5305-145-7018	214A	300
5305-145-7018	214A	531
5305-145-7018	214A	538
5305-145-7019	83A	11
5305-145-7019	214A	155
5305-145-7019	214A	157
5305-145-7676	114E	41
5305-145-7676	114E	54
5305-145-7676	114F	67
5305-145-7676	114F	70
5305-145-7676	114G	44
5305-145-7676	114G	58
5305-145-7676	114G	64
5305-145-7676	114H	38
5305-145-7676	114H	58
5305-145-7676	114H	64
5305-145-7676	114J	30
5305-145-7676	114J	45
5305-145-7676	114J	51
5305-145-7678	114F	34
5305-146-9038	214A	184
5305-146-9040	214A	100
5305-147-1919	214A	547
5305-147-2627	187	
5305-147-9503	206	7
5305-148-4268	203	8
5305-148-4268	204	2
5305-148-4279	214A	332
5305-148-6343	214A	213
5305-148-6344	214A	274
5305-148-6346	214A	137
5305-150-9207	44C	4
5305-150-9208	11D	27
5305-150-9208	BULK	
5305-150-9208	175D	29
5305-150-9209	79	131
5305-150-9209	106	87
5305-150-9210	11D	52
5305-150-9210	BULK	
5305-150-9210	213B	3
5305-150-9212	26	
5305-150-9213	16	18
5305-150-9213	17	37
5305-150-9213	32	191
5305-150-9213	72	11
5305-150-9213	72	8
5305-150-9213	145	177
5305-150-9213	186	2
5305-150-9213	190	
5305-150-9215	78	14
5305-150-9215	175H	10
5305-150-9267	214A	16
5305-150-9345	114	
5305-150-9515	BULK	
5305-150-9520	23	28
5305-150-9964	134	2
5305-150-9964	BULK	
5305-151-0376	39	28
5305-151-0385	96	34
5305-151-0385	106	9
5305-151-0386	BULK	
5305-151-0581	122	59
5305-151-0651	113C	26
5305-151-0696	128A	66

STOCK NUMBER	FIGURE NUMBER	ITEM NUMBER	STOCK NUMBER	FIGURE NUMBER	ITEM NUMBER
5305-151-0975	BULK		5305-180-0010	169	12
5305-151-1358	212A	119	5305-180-0010	176	3
			5305-180-0010	176	4
			5305-180-0010	181	12
			5305-180-0010	181	19
			5305-180-0010	181	26
			5305-180-0012	44	54
			5305-180-0012	44	56
5305-151-2081	113B	93	5305-180-0012	44	57
5305-151-2081	128A	116	5305-180-0012	44	59
5305-151-2084	BULK		5305-180-0012	46	84
5305-151-2106	104	17	5305-180-0012	49	33
5305-151-2106	104	49	5305-180-0012	56	12
5305-151-2106	104	93	5305-180-0012	56	16
5305-151-2198	44C	30	5305-180-0012	56	9
			5305-180-0012	59	2
5305-151-2233	130		5305-180-0012	59	3
5305-151-2235	122	6	5305-180-0012	61	2
5305-151-2238	55	7	5305-180-0012	115	33
5305-151-2297	79A	73	5305-180-0012	128	11
5305-151-2297	81A	41	5305-180-0012	169	13
5305-151-2297	90A	33	5305-180-0014	49	89
			5305-180-0014	56	5
			5305-180-3322	79	153
5305-151-2943	KITS		5305-180-3322	BULK	
5305-151-3220	11D	63	5305-180-3326	42	11
5305-151-3220	11D	66	5305-180-3326	128	
			5305-206-0514	114E	28
5305-151-3563	128A	74	5305-206-0514	114F	27
5305-156-2817	90A	7	5305-206-0514	114G	25
5305-156-2817	BULK		5305-206-0514	114H	28
5305-156-2861	129	11	5305-206-0514	114J	22
5305-156-2861	134	7	5305-206-0921	113F	88
5305-156-2937	BULK		5305-206-1201	44	58
5305-166-4882	175E	8	5305-206-1201	49	
5305-167-3635	115	35	5305-206-1201	150	109
5305-167-4108	214A	549	5305-206-1201	150	112
5305-167-4132	214A	506	5305-206-3657	44B	19
5305-174-0702	87	56	5305-206-3759	19	24
5305-174-0702	87	61	5305-206-5949	194	13
5305-174-0702	128		5305-206-8082	114A	8
5305-174-0702	125A	59	5305-206-8189	BULK	
5305-175-3230	BULK		5305-206-8189	175F	2
5305-180-0004	44	34	5305-206-8750	201	16
5305-180-0004	137		5305-206-9944	175F	32
5305-180-0004	180	10	5305-207-0145	79A	44
5305-180-0005	BULK		5305-207-3065	114A	97
5305-180-0010	44	18	5305-207-3065	114B	54
5305-180-0010	44	33	5305-207-3065	114C	47
5305-180-0010	44	37	5305-207-3069	114C	35
5305-180-0010	44	55	5305-207-3084	114A	99
5305-180-0010	46	79	5305-207-3084	114C	46
5305-180-0010	46	85	5305-207-3647	114D	77
5305-180-0010	46	86	5305-207-3657	114C	33
5305-180-0010	49	15	5305-207-3676	114B	35
5305-180-0010	49	17	5305-207-3676	114D	37
5305-180-0010	49	19	5305-207-3903	114B	49
5305-180-0010	49	20	5305-207-3903	114D	56
5305-180-0010	49	22	5305-207-3958	114E	77
5305-180-0010	49	23	5305-207-3958	114F	93
5305-180-0010	49	25	5305-207-4287	212A	188
5305-180-0010	49	27	5305-207-5006	113E	89
5305-180-0010	49	28	5305-207-5019	113E	54
5305-180-0010	49	30	5305-207-5021	113E	223
5305-180-0010	49	32	5305-207-5083	113E	
5305-180-0010	49	36	5305-207-5341	212A	215
5305-180-0010	80	127	5305-207-5341	212A	40
5305-180-0010	81	110	5305-207-5402	114D	47
5305-180-0010	115		5305-207-5638	113F	
5305-180-0010	160	25	5305-207-6524	124	
5305-180-0010	160	26	5305-207-7465	44C	40

STOCK NUMBER	FIGURE NUMBER	ITEM NUMBER	STOCK NUMBER	FIGURE NUMBER	ITEM NUMBER
5305-207-7468	BULK		5305-264-2100	94	2
5305-207-7940	114C	34	5305-264-2220	68	2
5305-207-9473	113E	228	5305-264-2220	175A	29
5305-207-9473	113E	236	5305-264-2220	212A	20
5305-207-9473	113E	262	5305-264-2220	214A	399
5305-207-9737	113C	32	5305-271-3550	210	28
5305-207-9958	114G	118	5305-271-5222	BULK	
5305-207-9958	114H	107	5305-271-5230	178	57
5305-207-9958	114H	113	5305-271-7746	BULK	
5305-207-9958	114J	92	5305-271-7778	84	38
5305-207-9958	114J	98	5305-271-7778	94	11
5305-208-0312	212A	7	5305-271-7778	11D	
5305-208-0312	212A	93	5305-271-7778	79B	2
5305-208-2595	187	2	5305-271-7778	123B	24
5305-208-4628	184	29	5305-271-7778	123B	56
5305-214-0635	113E		5305-271-7778	175B	21
5305-214-0635	113E	224	5305-271-7778	175F	21
5305-214-1553	113E	150	5305-271-7778	214A	108
5305-215-6223	113E	147	5305-271-8361	BULK	
5305-215-6227	113E	170	5305-271-8679	BULK	
5305-215-6227	113E	281	5305-272-4949	153	28
5305-215-6236	113E	175	5305-273-2187	114F	79
5305-215-6236	113E	198	5305-273-2187	114G	68
5305-215-6238	113E	134	5305-273-2187	114H	68
5305-215-6297	113E		5305-273-2187	114J	55
5305-215-6297	113E	213	5305-273-5342	41	114
5305-215-6528	113E	135	5305-273-5342	41	2
5305-215-8290	114D		5305-273-5342	75	
5305-215-8333	113E	74	5305-273-5342	101	121
5305-215-8341	113E	202	5305-273-5342	101	123
5305-217-8094	114A	71	5305-273-5342	101	127
5305-217-8094	114C	55	5305-273-5342	101	81
5305-217-8147	114A	72	5305-273-5342	101	83
5305-217-8147	114C	53	5305-273-5342	101	87
5305-217-8147	114L	69	5305-273-5342	154	15
5305-219-7948	114B	27	5305-273-5348	70	27
5305-219-7948	114D	29	5305-273-5348	101	129
5305-245-0442	114P	16	5305-273-5348	101	89
5305-245-0442	114Q	10	5305-273-5349	126	33
5305-249-0528	BULK		5305-273-5349	126	38
5305-249-0531	130		5305-274-0526	113F	39
5305-249-0531	130				
5305-249-0531	130				
5305-249-0531	130		5305-276-1728	175A	30
5305-253-5603	35A	30	5305-281-2607	76B	7
5305-253-5603	76B	27	5305-281-4175	212A	85
5305-253-5603	79A	47	5305-281-8526	149	3
5305-253-5603	81A	34	5305-281-8526	154	18
5305-253-5603	85B	41	5305-281-8526	176	11
5305-253-5603	104A	2	5305-281-8527	42	49
5305-253-5603	114H	5	5305-281-8527	50	4
5305-253-5603	114J	3	5305-281-8527	101	125
5305-253-5603	175C	21	5305-281-8527	101	85
5305-253-5603	175C	38	5305-281-8527	115	
5305-253-5603	175G	9	5305-281-8527	128	
5305-253-5603	175H	13	5305-281-8527	129	17
5305-253-5603	175H	42	5305-281-8527	129	18
5305-253-5606	84A	25	5305-281-8527	154	4
5305-253-5606	84B	27	5305-281-8527	154	72
5305-253-5606	114B	18	5305-281-8527	154	73
5305-253-5606	114D		5305-281-8527	154	89
5305-253-5606	175D	2	5305-281-8527	180	3
5305-253-5606	175E	23	5305-281-8874	50	10
5305-253-5606	181A	10	5305-281-8874	101	119
5305-253-5607	83A	13	5305-281-8874	101	79
5305-253-5607	123B	27	5305-281-8874	126	32
5305-253-5609	BULK		5305-281-8874	126	37
5305-253-5615	113		5305-281-8892	112	15
5305-253-5615	114		5305-282-0138	129	20
5305-253-5616	212A	59	5305-282-2712	94	20
5305-253-5618	BULK		5305-282-2712	128	

STOCK NUMBER	FIGURE NUMBER	ITEM NUMBER	STOCK NUMBER	FIGURE NUMBER	ITEM NUMBER
5305-282-2712	130	43	5305-286-1772	153	19
5305-282-2712	154	11	5305-286-4958	113F	230
5305-282-3385	BULK		5305-290-0651	210	29
5305-282-3385	175H	34	5305-290-3003	113B	77
5305-282-3386	175B	35	5305-290-3209	114F	41
5305-282-3861	192	24	5305-292-5923	138	
5305-282-3861	193	23	5305-292-5923	152	21
5305-282-4045	95	3	5305-292-5923	152	23
5305-282-4045	90A	21	5305-297-2173	114A	22
5305-282-4045	113B	5	5305-297-2173	114C	19
5305-282-4851	128A	21	5305-297-2173	114L	20
5305-282-5509	201	7	5305-297-2527	190A	11
5305-282-5509	BULK		5305-297-2918	113F	115
5305-282-5511	200	5	5305-297-2918	113F	137
5305-282-5546	140	22	5305-297-2949	114P	69
5305-282-5956	113		5305-297-2962	181A	49
5305-282-5956	114		5305-297-8622	113F	23
5305-282-9145	200	8	5305-298-1054	114P	52
5305-282-9854	78A		5305-298-2761	184	3
5305-282-9940	81A	36	5305-298-4521	114R	67
5305-285-2619	127	12	5305-298-4665	214A	14
5305-285-2619	127	14	5305-298-8210	28	22
5305-285-2619	127	16	5305-298-8368	17	2
5305-285-2619	127	18	5305-298-8368	21	21
5305-285-2619	127	2	5305-298-8368	21	50
5305-285-2619	127	20	5305-299-1061	175E	10
5305-285-2619	127	4	5305-302-5466	188	
5305-285-2619	127	6	5305-302-8639	190A	12
5305-285-2619	127	8	5305-303-6839	113E	
5305-285-2630	113		5305-303-6840	113E	
5305-285-2630	114		5305-303-6841	113E	
5305-285-8658	114A	7	5305-303-6842	113E	
5305-286-0213	41		5305-303-6843	113E	
5305-286-0213	44	16	5305-303-6844	113E	
5305-286-0213	44	19D	5305-303-6845	113E	
5305-286-0213	44	2	5305-303-9586	113E	123
5305-286-0213	44	21	5305-335-6005	188	8
5305-286-0213	44	23	5305-337-5581	113C	14
5305-286-0213	44	25	5305-347-0300	104A	23
5305-286-0213	44	27	5305-347-2106	113F	209
5305-286-0213	44	29	5305-367-6225	114T	23
5305-286-0213	44	31	5305-371-0798	114B	38
5305-286-0213	46	82	5305-371-0798	114D	40
5305-286-0213	50	3	5305-373-8999	113B	13
5305-286-0213	50	42	5305-394-1588	162B	2
5305-286-0213	101	77	5305-407-8551	114E	17
5305-286-0213	123	34	5305-407-8551	114F	12
5305-286-0213	132	86	5305-407-8551	114G	10
5305-286-0213	138		5305-407-8551	114H	12
5305-286-0213	139	9	5305-407-8551	114J	9
5305-286-0213	146	7	5305-441-4447	175A	15
5305-286-0213	154	66	5305-441-6437	175A	42
5305-286-0213	154	67	5305-443-2671	114A	98
5305-286-0213	154	68	5305-443-2685	114B	60
5305-286-0213	154	69	5305-443-2685	114D	66
5305-286-0213	154	70	5305-443-2748	114B	24
5305-286-0213	154	71	5305-443-2748	114B	26
5305-286-0213	154	74	5305-443-2748	114D	26
5305-286-0213	154	75	5305-443-2748	114D	28
5305-286-0213	154	76	5305-443-6149	114S	5
5305-286-0213	154	77	5305-443-6150	113E	180
5305-286-0213	154	78	5305-443-6150	113E	65
5305-286-0213	154	79	5305-443-6151	113E	187
5305-286-1375	113F		5305-443-7508	113C	27
5305-286-1375	113F	102	5305-478-8220	BULK	
5305-286-1375	113F	222	5305-483-9966	175A	19
5305-286-1766	116	1	5305-485-9182	212A	183
5305-286-1768	133	19	5305-487-5596	114C	
5305-286-1772	45	13	5305-487-5600	114A	66
5305-286-1772	131	55	5305-487-5600	114B	59
5305-286-1772	132	79	5305-487-5600	114C	45

STOCK NUMBER	FIGURE NUMBER	ITEM NUMBER	STOCK NUMBER	FIGURE NUMBER	ITEM NUMBER
5305-487-5600	114D	110	5305-558-8934	136	45
5305-487-5690	114D		5305-558-8934	136	50
5305-487-5921	113E	81	5305-558-8934	137	1
5305-487-5921	113E	97	5305-558-8934	137	23
5305-487-6085	113E	268	5305-558-8934	137	3
5305-487-6089	113E	220	5305-558-8934	137	33
5305-487-6096	113E	246	5305-558-8934	139	
5305-487-6096	113E	275	5305-558-8934	180	
5305-487-6121	113E	261	5305-559-0711	114D	
5305-487-7087	114S	55	5305-562-4974	123	65
5305-487-7178	114S	99	5305-568-3961	113E	
5305-508-9728	113C	37	5305-568-3962	113E	
5305-525-6002	113C	35	5305-568-3963	113E	
5305-527-4371	44C	15	5305-568-3964	113E	
5305-527-5850	114Y	11	5305-568-3965	113E	
5305-530-9323	202A	2	5305-568-3966	113E	
5305-530-9489	113F	184	5305-568-3967	113E	
5305-530-9499	113F	193	5305-568-3975	113E	
5305-530-9503	113B	46	5305-570-2978	106	86
5305-530-9584	114C		5305-572-9402	114B	3
5305-531-0202	123B	15	5305-572-9402	114D	3
5305-531-0298	123A	10	5305-576-1499	126	31
5305-531-0447	BULK		5305-576-1499	126	36
5305-531-1382	114C	37	5305-576-7810	41	190
5305-534-4106	23	11	5305-576-7810	109	15
5305-534-4106	24	2	5305-576-7810	118	
5305-537-1302	114A	77	5305-576-7810	140	29
5305-537-1302	114C	68	5305-579-1704	114A	6
5305-537-1302	114L	76	5305-579-3399	113A	12
5305-537-1399	114R	19	5305-579-3399	113A	4
5305-537-1403	113A	49	5305-579-3399	114R	2
5305-537-1403	114R	35	5305-579-3701	114E	87
5305-537-1407	113A	60	5305-579-3701	114F	100
5305-537-1407	114R	46	5305-579-3701	114G	80
5305-543-2023	81A	28	5305-579-4554	94	8
5305-543-2665	25	12	5305-579-4685	114F	49
5305-543-2665	124	80	5305-579-4828	114H	79
5305-544-9969	188	35	5305-579-4828	114J	65
5305-545-1632	203		5305-579-5742	114L	6
5305-545-5703	113C	39	5305-582-0057	44C	33
5305-545-9035	114D	48	5305-582-8998	32	107
5305-546-6930	42		5305-582-8998	35	
5305-546-6930	45	31	5305-584-6751	199	17
5305-546-6930	46	21	5305-584-8279	44	17
5305-546-6930	49	42	5305-584-8279	44	198
5305-546-6930	115	85	5305-598-6221	139	38
5305-550-0330	114P	42	5305-604-2599	113B	109
5305-550-2598	96	8	5305-612-8605	74	
5305-550-3131	104	77	5305-614-0247	11D	19
5305-550-3180	114B	45	5305-614-0247	11D	2
5305-550-3180	114D	51	5305-614-0270	213A	5
5305-550-4750	94	18	5305-616-2013	BULK	
5305-550-4750	106	54	5305-616-6615	96	53
5305-551-7941	113F	153	5305-616-8124	106	2
5305-558-8934	41	189	5305-619-1691	113F	109
5305-558-8934	46	18	5305-619-1691	113F	99
5305-558-8934	74	27	5305-619-2261	49	
5305-558-8934	75	40	5305-619-4411	114L	2
5305-558-8934	77	130	5305-622-9480	58	6
5305-558-8934	77	132	5305-622-9486	BULK	
5305-558-8934	115	51	5305-628-5586	BULK	
5305-558-8934	132	106C	5305-628-5586	175D	46
5305-558-8934	132	141	5305-637-1471	175A	23
5305-558-8934	132	143	5305-637-1702	94	12
5305-558-8934	132	147	5305-637-6678	113C	13
5305-558-8934	136	10	5305-637-7088	114C	
5305-558-8934	136	13	5305-637-8020	200	
5305-558-8934	136	17	5305-637-9044	113F	194
5305-558-8934	136	29	5305-637-9064	175A	116
5305-558-8934	136	32	5305-638-0448	78A	3
5305-558-8934	136	43	5305-638-0635	BULK	

STOCK NUMBER	FIGURE NUMBER	ITEM NUMBER	STOCK NUMBER	FIGURE NUMBER	ITEM NUMBER
5305-638-1425	212A	123	5305-697-5616	175C	9
5305-638-2373	114S	111	5305-702-0609	117	111
5305-638-2373	114S	113	5305-702-0609	118	77
5305-638-2399	113C	1	5305-702-0609	172	110
5305-638-3689	212A	24	5305-702-0609	172	112
5305-638-4093	107	52	5305-705-1640	80	18
5305-638-6448	23		5305-705-1640	80	29
5305-638-6448	24		5305-705-1640	80	51
5305-638-8449	113E	200	5305-705-2388	BULK	
5305-639-0914	114E	5	5305-709-9157	212A	61
5305-639-0914	114G	5	5305-717-5592	43	
5305-639-0914	114H	6	5305-717-6950	114E	56
5305-639-0914	114J	4	5305-717-6950	114E	90
5305-639-1339	114L	5	5305-717-6950	114F	72
5305-639-2807	212A		5305-717-6950	114F	90
5305-639-2807	212A	209	5305-717-6950	114G	55
5305-639-4812	41	109	5305-717-6950	114H	55
5305-639-4812	43	70	5305-717-6950	114J	42
5305-639-4812	132	19	5305-719-5330	123B	37
5305-639-5154	114P		5305-719-5342	104A	25
5305-639-5307	96	23	5305-719-5342	104A	5
5305-639-5308	96	16	5305-719-5342	175C	23
5305-639-6491	212A	115	5305-719-5400	BULK	
5305-639-6491	212A	141	5305-719-5403	42	53
5305-639-6491	212A	177	5305-719-5403	42	55
5305-639-6491	212A	180	5305-719-5403	81	18
5305-639-6963	113A	42	5305-719-5403	81	40
5305-639-6963	114R	26	5305-719-5405	BULK	
5305-639-6963	114R	28	5305-719-8681	113	
5305-639-8154	BULK		5305-719-8681	114	
5305-639-8966	212A	10	5305-720-8428	94	4
5305-639-8966	212A	164	5305-720-8428	106	1
5305-639-8966	212A	45	5305-720-8428	BULK	
5305-639-8966	212A	71	5305-720-8706	41	211
5305-652-4483	BULK		5305-724-6740	104A	16
5305-655-5779	49		5305-753-7077	214A	197
5305-655-5849	43	53	5305-753-7077	214A	2
5305-655-6556	BULK		5305-753-7077	214A	351
5305-655-7450	113E	34	5305-753-7077	214A	495
5305-656-0283	152	16	5305-753-7077	214A	84
5305-660-2625	90A	9	5305-753-7078	BULK	
5305-660-2625	175D	58	5305-761-4113	114D	
5305-679-6192	154		5305-770-2529	117	14
5305-680-9233	25	13	5305-770-2529	117	38
5305-684-8911	114L	86	5305-770-2529	117	73
5305-684-9773	204	11	5305-770-2529	118	
5305-685-2290	44C	28	5305-770-2529	118	154
5305-685-2290	90A	1	5305-770-2529	118	54
5305-685-2290	90A	2	5305-770-2529	118	64
5305-685-2290	90A	45	5305-776-7478	175A	5
5305-685-6867	113E	3	5305-781-7240	175C	2
5305-685-6867	113E	4	5305-785-1155	212A	126
5305-685-6881	114D		5305-803-9738	17	13
5305-687-6724	11	6	5305-803-9738	17	7
5305-687-6724	77	20	5305-808-1534	113E	
5305-687-6724	96	28	5305-808-1534	113E	41
5305-687-6724	136	26	5305-808-1994	113E	
5305-687-6724	136	35	5305-810-8209	128A	121
5305-687-6724	136	4	5305-810-8209	128A	43
5305-687-6724	136	55	5305-810-8209	128A	52
5305-687-6724	136	8	5305-811-9853	123B	30
5305-687-6724	123A	17	5305-812-3549	114E	67
5305-687-6724	123A	34	5305-812-3549	114F	107
5305-687-6724	123A	6	5305-812-3549	114F	109
5305-687-6724	123B	52	5305-812-3549	114G	85
5305-688-2342	35	38	5305-812-3549	114G	95
5305-688-2342	114		5305-812-3549	114H	85
5305-688-2342	140	42	5305-812-3549	114H	93
5305-689-5973	179	12	5305-812-3549	114J	71
5305-693-7480	181A	34	5305-812-3549	114J	78
5305-697-5616	BULK		5305-816-0032	113E	67

STOCK NUMBER	FIGURE NUMBER	ITEM NUMBER	STOCK NUMBER	FIGURE NUMBER	ITEM NUMBER
5305-821-9866	11D		5305-889-2999	132	
5305-822-7225	119	7	5305-889-2999	132	7
5305-824-2021	50	258	5305-889-2999	134	13
5305-824-2021	50	263	5305-889-2999	139	
5305-824-2021	50	384	5305-889-2999	128A	141
5305-824-2021	50	389	5305-889-3000	130	21
5305-828-7659	114E	38	5305-889-3000	130	72
5305-828-7659	114G	32	5305-889-3000	131	47
5305-828-7659	114H	33	5305-889-3000	131	5
5305-828-7659	114J	25	5305-889-3000	132	25
5305-834-5980	109	7	5305-889-3000	132	71
5305-839-4514	114E	13	5305-889-3000	132	84
5305-839-4514	114G	39	5305-889-3000	138	
5305-839-4514	114H	42	5305-889-3000	139	
5305-840-6694	115	2	5305-889-3001	133	15
5305-840-6694	176	84	5305-889-3116	128A	118
5305-840-6694	BULK		5305-889-3116	128A	134
5305-841-8148	128A	9	5305-889-3116	128A	147
5305-843-7897	212A	74	5305-889-3116	128A	48
5305-844-3572	43		5305-900-0598	BULK	
5305-844-3572	46	15	5305-901-3119	BULK	
5305-844-3572	46	17	5305-902-1050	113F	35
5305-844-3572	46	20	5305-902-1089	113	
5305-844-3572	139		5305-902-1089	114	
5305-844-3572	152	19	5305-912-4837	212A	112
5305-844-9888	48	42	5305-912-9206	43	74C
5305-849-7186	113A	10	5305-922-8778	112	16
5305-849-8055	132		5305-925-4849	113	
5305-849-8055	138		5305-925-4849	114	
5305-855-0969	61	9	5305-928-3885	212A	108
5305-855-6303	109	10	5305-928-3885	212A	82
5305-855-6303	130	63	5305-939-9179	214A	477
5305-855-6303	130	65	5305-939-9188	BULK	
5305-855-6303	131	34	5305-939-9189	214A	448
5305-855-6303	131	38	5305-939-9189	214A	521
5305-855-6303	132	48	5305-939-9189	214A	526
5305-855-6303	132	53	5305-939-9232	175H	24
5305-855-6303	132	54	5305-942-8431	85B	16
5305-855-6303	138		5305-942-8431	214A	116
5305-861-0032	79A	50	5305-942-8431	214A	130
5305-861-0032	79A	77	5305-942-8431	214A	266
5305-862-4895	114G		5305-942-8431	214A	289
5305-862-4896	114G		5305-945-3944	113E	73
5305-862-4897	114G		5305-946-2425	113F	145
5305-862-4899	114G		5305-946-2426	113F	135
5305-862-4901	114G	111	5305-946-2428	113F	
5305-862-9298	114G	34	5305-946-2429	113F	
5305-862-9298	114H	35	5305-946-2430	113F	118
5305-862-9298	114J	27	5305-946-2431	113F	158
5305-862-9301	114G	71	5305-952-7756	BULK	
5305-862-9301	114H	71	5305-954-0944	132	92
5305-862-9301	114J	57	5305-954-0944	132	93
5305-862-9302	114G		5305-954-3487	125A	8
5305-889-2997	128		5305-954-3938	128A	126
5305-889-2997	128	15	5305-954-4617	BULK	
5305-889-2997	129		5305-954-8996	BULK	
5305-889-2997	139		5305-955-9529	114D	
5305-889-2997	128A	102	5305-955-9530	114D	
5305-889-2997	128A	113	5305-955-9542	114B	2
5305-889-2997	128A	171	5305-955-9542	114D	
5305-889-2997	128A	77	5305-955-9542	114D	2
5305-889-2999	75		5305-957-1499	113B	28
5305-889-2999	128		5305-957-6269	BULK	
5305-889-2999	131		5305-957-7811	122	63
5305-889-2999	131		5305-957-7814	37	3
5305-889-2999	131		5305-957-7814	44C	39
5305-889-2999	132		5305-958-1009	50	
5305-889-2999	132		5305-958-1009	76	41
5305-889-2999	132		5305-958-1009	85	43
5305-889-2999	132		5305-958-1009	BULK	
5305-889-2999	132		5305-958-1011	50	248

STOCK NUMBER	FIGURE NUMBER	ITEM NUMBER	STOCK NUMBER	FIGURE NUMBER	ITEM NUMBER
5305-958-1011	120	16	5305-984-6194	115	9
5305-958-1011	176	61	5305-984-6195	77	16
5305-958-1011	176	64	5305-984-6195	101	64
5305-958-1011	176	70	5305-984-6195	108	11
5305-958-1012	132	67	5305-984-6195	133	2
5305-958-1012	BULK		5305-984-6195	170	22
5305-958-1013	BULK		5305-984-6195	170	30
5305-958-4351	32	189	5305-984-6196	BULK	
5305-958-4358	175D	35	5305-984-6197	41	
5305-958-5453	175A		5305-984-6197	104	14
5305-958-5453	175A	10	5305-984-6197	104	46
5305-958-5473	BULK		5305-984-6198	48	2
5305-958-5477	BULK		5305-984-6198	101	100
5305-959-3610	76B	20	5305-984-6198	102	31
5305-964-0780	18	15	5305-984-6198	BULK	
5305-964-0780	BULK		5305-984-6201	132	69
5305-964-9221	24	20	5305-984-6201	BULK	
5305-964-9221	BULK		5305-984-6208	138	
5305-965-5879	BULK		5305-984-6208	139	
5305-969-6487	162A	21	5305-984-6211	138	
5305-977-7491	113E		5305-984-6211	138	
5305-977-7492	113E	140	5305-984-6211	139	
5305-977-7493	113E	91	5305-984-6221	138	
5305-977-7494	113E	59	5305-984-7341	115	
5305-978-2176	114B	9	5305-984-7342	105	40
5305-978-2176	114D	9	5305-984-7343	185	3
5305-981-3912	188	2	5305-984-7343	BULK	
5305-983-7430	175A	89	5305-984-7351	138	
5305-984-4976	67	2	5305-984-7357	BULK	
5305-984-4976	67	5	5305-985-0775	114F	58
5305-984-4976	132		5305-989-7434	74	
5305-984-4978	128A	130	5305-989-7434	75	
5305-984-4979	41	95	5305-989-7434	77	48
5305-984-4983	162	21	5305-989-7434	123	4
5305-984-4983	123A	23	5305-989-7434	124	82
5305-984-4983	123A	26	5305-989-7434	138	
5305-984-4988	11	7	5305-989-7434	141	23
5305-984-4988	77	18	5305-989-7435	75	2
5305-984-4988	77	21	5305-989-7435	79	144
5305-984-4988	77	24	5305-989-7435	79	85
5305-984-4988	118	106	5305-989-7435	122	57
5305-984-4988	118	114	5305-989-7435	122	8
5305-984-4988	118	130	5305-989-7435	132	91
5305-984-4988	118	135	5305-989-7435	162	19
5305-984-4988	118	25	5305-989-7435	162	5
5305-984-4988	118	30	5305-989-7435	162	8
5305-984-4988	118	35	5305-989-7435	165	4
5305-984-4988	118	84	5305-989-7435	BULK	
5305-984-4988	135	17	5305-990-1347	BULK	
5305-984-4988	138		5305-990-6444	104	74
5305-984-4988	79A	65	5305-990-6444	123	69
5305-984-4988	81A	43	5305-990-6444	84A	20
5305-984-4988	128A	24	5305-990-6444	84B	22
5305-984-5697	76		5305-990-6444	BULK	
5305-984-6191	146	2	5305-990-6444	162A	15
5305-984-6191	146	6	5305-993-1848	59	4
5305-984-6191	176	10	5305-993-1848	138	
5305-984-6191	BULK		5305-993-1848	144	127
5305-984-6193	57	2	5305-995-1332	187	37
5305-984-6193	101	102	5305-995-3440	124	77
5305-984-6193	101	62	5305-995-3442	114	
5305-984-6193	118	162	5305-995-3444	BULK	
5305-984-6193	123	92	5306-023-7195	23	2
5305-984-6193	123	94	5306-023-7195	23	3
5305-984-6193	123	96	5306-141-4507	104	34
5305-984-6193	123	98	5306-141-4507	104	83
5305-984-6193	138		5306-141-4507	BULK	
5305-984-6193	140	4	5306-141-4511	36	6
5305-984-6193	154	232	5306-141-4511	105	38
5305-984-6194	108	13	5306-141-4514	87	150
5305-984-6194	115	11	5306-141-4517	BULK	

STOCK NUMBER	FIGURE NUMBER	ITEM NUMBER	STOCK NUMBER	FIGURE NUMBER	ITEM NUMBER
5306-141-4524	96	2	5306-151-1963	42	21
5306-141-4524	96	7	5306-151-1963	122	53
5306-141-4524	106	55	5306-151-1966	105	16
5306-141-4765	165	12	5306-151-1969	88	12
5306-141-4766	105	57	5306-151-1969	BULK	
5306-141-4766	165	23	5306-151-1970	BULK	
5306-141-4776	125	9	5306-151-1971	42	24
5306-141-4788	BULK		5306-151-2301	108	39
5306-144-3849	160	2	5306-151-2305	104	73
5306-144-3849	160	8	5306-151-2305	104	89
5306-144-3853	122	16	5306-151-2324	125	13
5306-144-3856	BULK		5306-151-2325	125	6
5306-144-3859	46		5306-151-2527	BULK	
5306-144-3868	BULK		5306-151-2531	BULK	
5306-144-3870	116	11	5306-151-3087	BULK	
5306-144-3870	BULK		5306-151-3088	BULK	
5306-144-3973	167	9	5306-151-3091	38	33
5306-144-4072	116	13	5306-151-3091	BULK	
5306-144-4072	116	42	5306-151-3092	BULK	
5306-144-4072	117	55	5306-151-3094	BULK	
5306-144-4073	BULK		5306-151-3538	105	65
5306-147-1898	185	14	5306-151-3539	BULK	
5306-147-1908	214A	37	5306-151-3542	BULK	
5306-147-6497	214A	363A	5306-151-3705	98	1
5306-147-9494	190	65	5306-151-3705	98	14
5306-150-9081	BULK		5306-151-3705	99	1
5306-150-9285	BULK		5306-156-2288	56	70
5306-150-9290	157	35	5306-156-2297	BULK	
5306-150-9550	BULK		5306-156-2339	39	32
5306-150-9838	BULK		5306-156-2389	116	
5306-150-9848	BULK		5306-156-2389	BULK	
5306-150-9878	175E		5306-156-2391	65	2
5306-150-9906	50	173	5306-156-2392	BULK	
5306-150-9906	50	178	5306-156-2395	46	2
5306-150-9911	116	24	5306-156-2472	55	92
5306-150-9911	116	26	5306-156-2472	104	38
5306-150-9918	BULK		5306-156-2527	46	3
5306-150-9925	46	4	5306-156-2533	41	54
5306-150-9928	55	89	5306-156-2537	73	3
5306-150-9956	BULK		5306-156-2537	BULK	
5306-151-0329	38	2	5306-156-2541	96	82
5306-151-0332	BULK		5306-156-2541	119	23
5306-151-0334	96		5306-156-2542	55	76
5306-151-0405	96	48	5306-156-2542	55	81
5306-151-0523	116	44	5306-156-2542	56	91
5306-151-0526	108	50	5306-156-2542	96	81
5306-151-0526	BULK		5306-156-2694	45	
5306-151-0722	37	24	5306-156-2694	45	24
5306-151-1058	BULK		5306-156-2695	45	2
5306-151-1060	169	61	5306-156-2695	45	5
5306-151-1060	169	75	5306-156-2696	45	
5306-151-1092	79A	1	5306-156-2700	125	
5306-151-1193	105	51	5306-156-2702	122	38
5306-151-1193	BULK		5306-156-2703	116	43
5306-151-1194	BULK		5306-166-2071	190	31
5306-151-1423	101	71	5306-167-4086	198	21
5306-151-1423	179	24	5306-168-5093	188	13
5306-151-1523	BULK		5306-168-5093	188	20
5306-151-1530	BULK		5306-174-3863	215	6
5306-151-1532	176	44	5306-174-3951	90A	4
5306-151-1960	42	15	5306-174-4091	83	11
5306-151-1960	42	18	5306-174-4105	BULK	
5306-151-1960	84	11	5306-174-4114	38	4
5306-151-1960	84	6	5306-174-4114	158	20
5306-151-1961	42	14	5306-174-4115	169	51
5306-151-1961	50	168	5306-174-4116	96	
5306-151-1961	122	25	5306-174-4117	101	25
5306-151-1961	122	29	5306-174-4117	101	26
5306-151-1962	104	72	5306-174-4117	101	55
5306-151-1962	104	88	5306-174-4117	101	93
5306-151-1962	122	54	5306-174-4118	176	36

STOCK NUMBER	FIGURE NUMBER	ITEM NUMBER	STOCK NUMBER	FIGURE NUMBER	ITEM NUMBER
5306-174-4118	176	37	5306-182-1528	76	26
5306-174-4120	BULK		5306-182-1528	76	65
5306-180-0140	84	18	5306-182-1528	174	5
5306-180-1778	39	31	5306-182-1528	174	9
5306-180-2705	21	42	5306-182-1530	BULK	
5306-180-2708	BULK		5306-182-1531	76	20
5306-180-2712	173	36	5306-182-1816	84	44
5306-180-2716	119	41	5306-182-1849	169	5
5306-180-2716	119	42	5306-182-1851	25	80
5306-180-2717	BULK		5306-182-1851	176	15
5306-180-2721	82	10	5306-182-1852	76	10
5306-180-2721	82	26	5306-182-1853	50	364
5306-180-2721	82	35	5306-182-1854	39	33
5306-180-2721	82	52	5306-182-1854	45	17
5306-180-2721	82	76	5306-182-1854	85	8
5306-180-2721	151	13	5306-182-1854	150	15
5306-180-2721	151	19	5306-182-1854	154	179
5306-180-2721	155	11	5306-182-1855	112	6
5306-180-2721	155	27	5306-182-1855	150	103
5306-180-2723	BULK		5306-182-1856	112	7
5306-180-2724	22	2	5306-182-1859	109	29
5306-180-2725	105	60	5306-182-1863	BULK	
5306-180-2748	BULK		5306-182-1864	BULK	
5306-180-2749	41	126	5306-182-1865	171	10
5306-180-2749	125	2	5306-182-1865	171	2
5306-180-2749	162	43	5306-182-1865	171	4
5306-180-2750	21	16	5306-182-1865	171	6
5306-180-2750	82	24	5306-182-1865	171	8
5306-180-2750	83	27	5306-182-1866	85	7
5306-180-2751	23	17	5306-182-1866	BULK	
5306-180-2751	125	7	5306-182-1898	214A	25
5306-180-2751	170	3	5306-182-1899	48	37
5306-180-2752	38	20	5306-182-1900	106	64
5306-180-2752	74	18	5306-182-1900	106	65
5306-180-2753	37	19	5306-182-1920	BULK	
5306-180-2754	75	31	5306-182-1922	104	13
5306-180-2754	91	36	5306-182-1922	104	45
5306-180-2756	150	88	5306-182-1926	76	56
5306-180-2757	BULK		5306-182-1931	169	6
5306-180-2769	176	75	5306-182-1938	42	2
5306-180-2769	176	77	5306-182-1958	41	
5306-180-2770	BULK		5306-182-1958	56	103
5306-180-2778	176	16	5306-182-1958	72	1
5306-180-2778	176	19	5306-182-1958	79	89
5306-180-2785	179	2	5306-182-1958	81	118
5306-180-3347	BULK		5306-182-1958	87	110
5306-180-3348	39	30	5306-182-1958	101	70
5306-180-3348	BULK		5306-182-1958	107	11
5306-180-3349	38	13	5306-182-1958	108	22
5306-180-3360	65	8	5306-182-1958	108	29
5306-180-3360	117	34	5306-182-1958	115	37
5306-180-3360	117	69	5306-182-1958	125	11
5306-180-3360	117	9	5306-182-1959	51	23
5306-180-3360	120		5306-182-1959	52	
5306-180-3360	120	83	5306-182-1959	52	20
5306-180-3360	165	45	5306-182-1959	56	102
5306-180-3369	187	41	5306-182-1959	56	68
5306-180-3372	204	17	5306-182-1959	79	147
5306-180-3372	205	9	5306-182-1959	82	2
5306-180-3372	206	25	5306-182-1959	82	7
5306-180-3372	206	78	5306-182-1959	82	72
5306-180-3372	206	81	5306-182-1959	101	18
5306-180-3374	209	2	5306-182-1959	105	11
5306-180-3374	209	6	5306-182-1960	66	12
5306-180-3384	187	15	5306-182-1960	67	19
5306-180-4212	213	5	5306-182-1960	79	142
5306-182-1526	76	33	5306-182-1960	79	148
5306-182-1526	76	49	5306-182-1960	79	5
5306-182-1526	76	72	5306-182-1960	80	5
5306-182-1528	41	123	5306-182-1960	81	5
5306-182-1528	41	124	5306-182-1960	82	22

STOCK NUMBER	FIGURE NUMBER	ITEM NUMBER	STOCK NUMBER	FIGURE NUMBER	ITEM NUMBER
5306-182-1960	107	31	5306-182-2008	41	97
5306-182-1960	129	21	5306-182-2008	104	6
5306-182-1960	155	23	5306-182-2008	104	66
5306-182-1960	155	3	5306-182-2009	67	10
5306-182-1960	155	7	5306-182-2009	105	54
5306-182-1960	176	31	5306-182-2011	33	32
5306-182-1961	76	59	5306-182-2011	148	30
5306-182-1961	79	57	5306-182-2013	57	23
5306-182-1961	152	12	5306-182-2014	84	17
5306-182-1962	64	4	5306-182-2014	176	83
5306-182-1962	82	21	5306-182-2015	41	65
5306-182-1962	107	30	5306-182-2015	75	10
5306-182-1962	108	5	5306-182-2015	75	17
5306-182-1963	87	106	5306-182-2015	79	145
5306-182-1963	107	28	5306-182-2015	79	15
5306-182-1963	176	23	5306-182-2015	79	30
5306-182-1963	176	27	5306-182-2015	79	42
5306-182-1964	79	82	5306-182-2015	80	15
5306-182-1964	80	133	5306-182-2015	80	26
5306-182-1964	80	89	5306-182-2015	80	42
5306-182-1964	81	116	5306-182-2015	81	15
5306-182-1964	81	72	5306-182-2015	81	31
5306-182-1964	82	58	5306-182-2015	83	15
5306-182-1964	82	64	5306-182-2015	104	100
5306-182-1964	82	68	5306-182-2015	104	65
5306-182-1964	116	37	5306-182-2016	12	48
5306-182-1964	117	32	5306-182-2016	76	14
5306-182-1964	117	68	5306-182-2016	78	22
5306-182-1964	117	8	5306-182-2016	78	27
5306-182-1964	117	97	5306-182-2016	79	161
5306-182-1964	118	124	5306-182-2016	79	171
5306-182-1964	118	17	5306-182-2016	82	57
5306-182-1964	118	4	5306-182-2016	82	67
5306-182-1964	118	71	5306-182-2016	117	102
5306-182-1964	119	19	5306-182-2016	117	20
5306-182-1964	151	1	5306-182-2016	117	46
5306-182-1964	151	5	5306-182-2016	117	81
5306-182-1964	151	9	5306-182-2016	118	126
5306-182-1964	155	19	5306-182-2016	118	19
5306-182-1965	79	141	5306-182-2016	118	79
5306-182-1965	117	106	5306-182-2016	118	8
5306-182-1965	117	54	5306-182-2016	138	15
5306-182-1965	118	5	5306-182-2016	151	
5306-182-1965	118	72	5306-182-2016	151	2
5306-182-1965	120		5306-182-2016	151	6
5306-182-1966	56	107	5306-182-2016	157	26
5306-182-1966	56	41	5306-182-2016	162	45
5306-182-1966	56	43	5306-182-2016	165	65
5306-182-1966	60	8	5306-182-2017	51	17
5306-182-1966	117	10	5306-182-2017	51	21
5306-182-1966	117	33	5306-182-2017	52	26
5306-182-1966	117	35	5306-182-2017	52	27
5306-182-1966	117	67	5306-182-2017	52	45
5306-182-1966	117	7	5306-182-2017	52	47
5306-182-1966	117	70	5306-182-2017	67	11
5306-182-1966	117	98	5306-182-2017	67	14
5306-182-1966	144	14	5306-182-2017	78	26
5306-182-1966	145	28	5306-182-2017	79	2
5306-182-2005	35	32	5306-182-2017	80	112
5306-182-2005	63	6	5306-182-2017	80	119
5306-182-2005	64	2	5306-182-2017	80	126
5306-182-2005	116	38	5306-182-2017	80	140
5306-182-2005	35A		5306-182-2017	80	2
5306-182-2006	42	5	5306-182-2017	80	73
5306-182-2006	42	7	5306-182-2017	80	80
5306-182-2006	67	16	5306-182-2017	80	87
5306-182-2006	104	3	5306-182-2017	81	102
5306-182-2006	170	14	5306-182-2017	81	109
5306-182-2006	176	46	5306-182-2017	81	2
5306-182-2007	118	108	5306-182-2017	81	56
5306-182-2007	118	116	5306-182-2017	81	70

STOCK NUMBER	FIGURE NUMBER	ITEM NUMBER	STOCK NUMBER	FIGURE NUMBER	ITEM NUMBER
5306-182-2017	81	95	5306-182-2057	123	89
5306-182-2017	82	5	5306-182-2057	138	
5306-182-2017	82	74	5306-182-2057	145	10
5306-182-2017	102	34	5306-182-2057	146	11
5306-182-2017	155	22	5306-182-2057	147	38
5306-182-2017	155	25	5306-182-2057	148	32
5306-182-2017	155	9	5306-182-2057	148	36
5306-182-2018	70	17	5306-182-2057	148	38
5306-182-2018	107	29	5306-182-2057	154	46
5306-182-2019	61	4	5306-182-2057	172	108
5306-182-2019	96	47	5306-182-2058	49	2
5306-182-2019	165	33	5306-182-2058	49	3
5306-182-2020	35	34	5306-182-2058	49	9
5306-182-2021	60	12	5306-182-2058	50	9
5306-182-2022	12	33	5306-182-2058	51	1
5306-182-2038	66	3	5306-182-2058	52	1
5306-182-2038	90	30	5306-182-2058	55	4
5306-182-2038	90	32	5306-182-2058	56	112
5306-182-2039	96	46	5306-182-2058	56	4
5306-182-2056	11	31	5306-182-2058	56	78
5306-182-2056	35	37	5306-182-2058	56	79
5306-182-2056	110	48	5306-182-2058	56	81
5306-182-2056	123	77	5306-182-2058	56	82
5306-182-2056	146	37	5306-182-2058	57	32
5306-182-2056	150	54	5306-182-2058	57	8
5306-182-2056	150	56	5306-182-2058	60	3
5306-182-2056	150	58	5306-182-2058	62	16
5306-182-2056	154	47	5306-182-2058	62	3
5306-182-2056	178	27	5306-182-2058	62	8
5306-182-2057	32	213	5306-182-2058	70	3
5306-182-2057	33		5306-182-2058	71	2
5306-182-2057	50	252	5306-182-2058	77	33
5306-182-2057	55	60	5306-182-2058	80	122
5306-182-2057	56	111	5306-182-2058	81	105
5306-182-2057	56	36	5306-182-2058	85	
5306-182-2057	56	38	5306-182-2058	87	84
5306-182-2057	56	48	5306-182-2058	88	28
5306-182-2057	56	50	5306-182-2058	91	11
5306-182-2057	56	63	5306-182-2058	101	15
5306-182-2057	56	83	5306-182-2058	105	39
5306-182-2057	63	2	5306-182-2058	108	17
5306-182-2057	63	4	5306-182-2058	117	100
5306-182-2057	63	7	5306-182-2058	117	109
5306-182-2057	64	1	5306-182-2058	117	44
5306-182-2057	74	61	5306-182-2058	117	59
5306-182-2057	74	62	5306-182-2058	118	129
5306-182-2057	74	67	5306-182-2058	118	139
5306-182-2057	74	69	5306-182-2058	118	16
5306-182-2057	75	23	5306-182-2058	118	29
5306-182-2057	75	42	5306-182-2058	118	3
5306-182-2057	75	74	5306-182-2058	118	39
5306-182-2057	75	75	5306-182-2058	118	75
5306-182-2057	75	83	5306-182-2058	118	83
5306-182-2057	75	85	5306-182-2058	122	
5306-182-2057	78		5306-182-2058	122	20
5306-182-2057	78	43	5306-182-2058	122	22
5306-182-2057	79	179	5306-182-2058	146	10
5306-182-2057	80	34	5306-182-2058	154	38
5306-182-2057	81	23	5306-182-2058	154	48
5306-182-2057	87	82	5306-182-2058	165	46
5306-182-2057	87	85	5306-182-2058	169	83
5306-182-2057	91	10	5306-182-2058	182	17
5306-182-2057	104	4	5306-182-2058	182	3
5306-182-2057	108	15	5306-182-2058	BULK	
5306-182-2057	108	25	5306-182-2059	41	9
5306-182-2057	108	32	5306-182-2059	51	2
5306-182-2057	108	8	5306-182-2059	52	2
5306-182-2057	112	32	5306-182-2059	56	22
5306-182-2057	112	41	5306-182-2059	60	2
5306-182-2057	112	52	5306-182-2059	71	12
5306-182-2057	123	78	5306-182-2059	72	18

STOCK NUMBER	FIGURE NUMBER	ITEM NUMBER	STOCK NUMBER	FIGURE NUMBER	ITEM NUMBER
5306-182-2059	73	2	5306-182-2060	214A	35
5306-182-2059	75	43	5306-182-2061	32	212
5306-182-2059	85	28	5306-182-2061	33	
5306-182-2059	88	14	5306-182-2061	34	13
5306-182-2059	88	29	5306-182-2061	34	20
5306-182-2059	88	30	5306-182-2061	49	10
5306-182-2059	89	2	5306-182-2061	49	4
5306-182-2059	102	33	5306-182-2061	50	370
5306-182-2059	104	67	5306-182-2061	52	52
5306-182-2059	104	7	5306-182-2061	57	18
5306-182-2059	107	106	5306-182-2061	67	4
5306-182-2059	115		5306-182-2061	79	12
5306-182-2059	116	3	5306-182-2061	79	28
5306-182-2059	117	113	5306-182-2061	79	40
5306-182-2059	117	28	5306-182-2061	80	12
5306-182-2059	117	61	5306-182-2061	80	20
5306-182-2059	117	63	5306-182-2061	81	12
5306-182-2059	117	89	5306-182-2061	81	20
5306-182-2059	118	10	5306-182-2061	88	13
5306-182-2059	118	100	5306-182-2061	101	12
5306-182-2059	118	12	5306-182-2061	117	18
5306-182-2059	118	121	5306-182-2061	117	42
5306-182-2059	118	21	5306-182-2061	117	77
5306-182-2059	118	81	5306-182-2061	118	160
5306-182-2059	119	27	5306-182-2061	118	60
5306-182-2059	122	19	5306-182-2061	118	70
5306-182-2059	122	24	5306-182-2061	122	18
5306-182-2059	132	106E	5306-182-2061	122	23
5306-182-2059	150	28	5306-182-2061	125	15
5306-182-2060	44	43	5306-182-2061	147	37
5306-182-2060	53	2	5306-182-2061	178	9
5306-182-2060	55	11	5306-182-2062	34	21
5306-182-2060	55	18	5306-182-2062	54	68
5306-182-2060	57	19	5306-182-2062	57	26
5306-182-2060	69	10	5306-182-2062	63	3
5306-182-2060	74	65	5306-182-2062	82	33
5306-182-2060	75	78	5306-182-2062	88	11
5306-182-2060	79	20	5306-182-2062	118	101
5306-182-2060	80	31	5306-182-2062	119	47
5306-182-2060	87	105	5306-182-2063	32	194
5306-182-2060	87	2	5306-182-2063	34	
5306-182-2060	87	39	5306-182-2063	50	31
5306-182-2060	88	26	5306-182-2063	101	103
5306-182-2060	101	59	5306-182-2063	101	65
5306-182-2060	101	69	5306-182-2063	144	130
5306-182-2060	101	97	5306-182-2063	145	180
5306-182-2060	105	2	5306-182-2063	149	17
5306-182-2060	105	44	5306-182-2064	11	32
5306-182-2060	107	105	5306-182-2064	34	
5306-182-2060	117		5306-182-2064	35	24
5306-182-2060	117	110	5306-182-2064	44	44
5306-182-2060	117	22	5306-182-2064	148	21
5306-182-2060	117	24	5306-182-2064	149	18
5306-182-2060	117	48	5306-182-2064	159	22
5306-182-2060	117	50	5306-182-2064	159	28
5306-182-2060	117	52	5306-206-0847	BULK	
5306-182-2060	117	79	5306-206-0946	198	22
5306-182-2060	117	83	5306-206-1353	91	8
5306-182-2060	117	85	5306-206-1366	91	
5306-182-2060	118	134	5306-206-3871	BULK	
5306-182-2060	118	34	5306-206-4911	101	42
5306-182-2060	118	76	5306-206-6281	70	2
5306-182-2060	118	88	5306-206-6281	70	31
5306-182-2060	125	10	5306-206-6281	80	71
5306-182-2060	125	14	5306-206-6281	81	54
5306-182-2060	138		5306-206-6370	87	125
5306-182-2060	152	35	5306-206-6370	87	129
5306-182-2060	159	21	5306-206-6370	87	135
5306-182-2060	159	27	5306-206-6370	87	143
5306-182-2060	170	13	5306-206-6370	87	154
5306-182-2060	178	12	5306-206-6370	87	19

STOCK NUMBER	FIGURE NUMBER	ITEM NUMBER	STOCK NUMBER	FIGURE NUMBER	ITEM NUMBER
5306-206-6370	87	25	5306-272-2141	119	30
5306-206-6370	87	41	5306-275-9528	36	11
5306-206-6370	87	47	5306-275-9528	BULK	
5306-206-6370	87	65	5306-275-9562	98	15
5306-206-6370	87	71	5306-275-9562	98	2
5306-206-6370	87	99	5306-275-9562	99	2
5306-206-6370	88	3	5306-275-9562	BULK	
5306-206-6370	88	4	5306-275-9643	138	
5306-206-6370	91	14	5306-275-9696	120	20
5306-206-6370	91	16	5306-275-9696	BULK	
5306-206-6370	91	2	5306-275-9901	E84	
5306-206-6370	91	40	5306-281-8936	87	91
5306-206-6370	93	29	5306-281-8936	109	19
5306-206-6370	93	7	5306-281-8936	172	
5306-206-6370	101	2	5306-281-8936	172	96
5306-206-6370	101	5	5306-281-8945	11	34
5306-206-6370	101	8	5306-281-9545	210	7
5306-206-6370	107	2	5306-281-9545	210	9
5306-206-6370	107	7	5306-281-9997	BULK	
5306-206-6370	152	38	5306-282-0904	83	18
5306-206-6370	153	5	5306-282-0921	52	48B
5306-206-6370	159	14	5306-282-2310	198	34
5306-206-6370	159	32	5306-282-2678	59	6
5306-206-6370	159	6	5306-282-2680	153	25
5306-206-6375	87	5	5306-282-3340	206	46
5306-206-6375	88	33	5306-282-3342	190	63
5306-206-6380	153	10	5306-282-3342	196	2
5306-206-6381	91	42	5306-282-3342	197	2
5306-206-6381	BULK		5306-282-4309	39	34
5306-206-6546	176	43	5306-282-4310	BULK	
5306-206-9248	BULK		5306-282-4312	77	34
5306-207-0980	87	152	5306-282-4313	BULK	
5306-207-0980	102	20	5306-282-4696	13	1
5306-207-0980	165	20	5306-282-5821	BULK	
5306-207-0980	BULK		5306-282-5822	BULK	
5306-207-0995	153	14	5306-282-5842	BULK	
5306-207-1051	88	9	5306-282-5843	116	6
5306-207-1058	102	17	5306-282-6537	207	22
5306-207-1062	162	30	5306-282-6540	185	11
5306-207-1067	159	36	5306-282-8802	BULK	
5306-207-1666	206	2	5306-283-0560	82	63
5306-207-2317	93	15	5306-285-3934	97	9
5306-207-2321	87	113	5306-285-5325	38	52
5306-207-2321	159	2	5306-285-5325	41	55
5306-207-2321	159	7	5306-285-5325	101	111
5306-207-4233	14	1	5306-285-5325	104	30
5306-207-4594	51	27	5306-285-5325	104	62
5306-207-4594	BULK		5306-285-5326	98	12
5306-207-6434	189	3	5306-285-5326	98	19
5306-207-6437	187	22	5306-285-5326	98	25
5306-207-8130	BULK		5306-285-5326	98	6
5306-207-8177	203	6	5306-285-5326	101	47
5306-207-8177	206	75	5306-285-5326	169	26
5306-207-8749	114R	64	5306-285-5505	191	22
5306-207-9791	61	13	5306-285-5505	191	3
5306-208-1239	176	21	5306-285-5505	195	2
5306-208-6401	BULK		5306-285-5507	193	11
5306-208-7661	188	42	5306-285-5524	213	9
5306-208-9029	79	23	5306-285-7528	BULK	
5306-208-9029	84	24	5306-285-7529	BULK	
5306-208-9036	12	10	5306-286-0836	84A	3
5306-226-8248	148	34	5306-286-0836	84B	7
5306-260-7573	74	64	5306-286-1452	107	6
5306-260-7573	75	77	5306-286-1458	BULK	
5306-260-7573	BULK		5306-286-1462	BULK	
5306-260-7580	119	16	5306-286-1463	BULK	
5306-260-7580	BULK		5306-286-1467	162	60
5306-260-7581	BULK		5306-286-1469	BULK	
5306-260-9692	91	3	5306-286-3319	BULK	
5306-269-6865	BULK		5306-286-8141	162B	9
5306-269-6986	84		5306-292-3102	12	23

STOCK NUMBER	FIGURE NUMBER	ITEM NUMBER	STOCK NUMBER	FIGURE NUMBER	ITEM NUMBER
5306-292-5099	101	9	5306-527-5909	198	2
5306-292-5106	BULK		5306-531-0863	125A	11
5306-292-5173	93	33	5306-531-8553	37	
5306-292-5204	41	174	5306-531-8554	37	
5306-292-5204	48	17	5306-531-9600	190	69
5306-292-5204	49		5306-550-0486	78	41
5306-292-5204	84	31	5306-550-1159	119	34
5306-292-6465	BULK		5306-550-2586	37	
5306-292-6466	BULK		5306-550-2595	38	23
5306-292-8252	37	32	5306-550-2685	37	
5306-292-8252	41	10	5306-550-3405	55	23
5306-292-8252	51	25	5306-550-3405	55	29
5306-292-8252	79	51	5306-550-3405	55	35
5306-292-8252	80	137	5306-550-3405	55	49
5306-292-8252	81	120	5306-550-3405	55	52
5306-292-8252	82	3	5306-550-3405	55	72
5306-292-8252	82	50	5306-550-3405	55	80
5306-292-8252	107	10	5306-550-3405	55	86
5306-292-8252	153	3	5306-550-3405	56	92
5306-292-8252	155	2	5306-550-3405	91	27
5306-292-8275	55	36	5306-550-3405	96	30
5306-292-8275	90	9	5306-550-3406	90	2
5306-292-8275	91	28	5306-550-3406	104	32
5306-292-8275	BULK		5306-550-3408	55	91
5306-292-8276	55	24	5306-550-3408	101	48
5306-292-8276	55	30	5306-550-3408	105	10
5306-292-8276	55	42	5306-550-3568	39	2
5306-292-8276	55	48	5306-550-9134	BULK	
5306-292-8276	55	73	5306-550-9142	175E	4
5306-292-8276	56	87	5306-551-1793	37	
5306-292-8276	90	15	5306-551-6996	70	24
5306-292-8276	90	3	5306-551-6997	11	12
5306-292-8276	96		5306-551-7298	41	57
5306-292-8276	107	27	5306-558-4529	16	
5306-292-8277	56	94	5306-558-8910	37	37
5306-292-8280	BULK		5306-558-8910	37	38
5306-292-8282	95	11	5306-558-9446	32	162
5306-292-8282	100	7	5306-558-9447	BULK	
5306-292-8285	73	4	5306-558-9459	BULK	
5306-292-8285	116	40	5306-558-9467	56	30
5306-292-8530	87	111	5306-558-9467	69	13
5306-292-8555	87	164	5306-558-9467	69	3
5306-292-8555	87	168	5306-559-1080	37	
5306-297-7940	165	14	5306-559-7994	37	
5306-298-4355	16	20	5306-559-8133	49	
5306-298-6925	176	38	5306-559-8134	52	50
5306-298-8293	190		5306-559-8134	84	20
5306-302-8637	187	30	5306-559-8134	84	22
5306-302-9083	100	1	5306-559-8134	87	92
5306-302-9084	100	3	5306-559-8134	109	18
5306-441-8254	175D	22	5306-559-8134	120	89
5306-478-9788	187	25	5306-559-8134	120	92
5306-514-8077	37		5306-559-8134	150	93
5306-514-8093	16	79	5306-559-8135	49	
5306-514-8109	16	73	5306-559-8135	49	55B
5306-514-8109	16	83	5306-559-8135	49	75
5306-514-8341	84		5306-559-8135	49	81
5306-515-7310	117	2	5306-559-8136	77	35
5306-515-7310	118	141	5306-559-8139	54	62
5306-515-7310	118	41	5306-559-8140	54	63
5306-515-7310	118	90	5306-559-8140	BULK	
5306-515-7527	41	170	5306-559-8143	120	91
5306-515-7527	41	179	5306-559-8143	150	38
5306-515-8332	37		5306-561-4178	169	33
5306-515-8333	37		5306-563-6720	179	15
5306-515-8339	37		5306-567-9840	21	
5306-515-8340	37		5306-573-1036	119	17
5306-515-8341	37		5306-576-1897	BULK	
5306-515-8344	37		5306-576-1898	BULK	
5306-527-4562	36	26	5306-576-1899	BULK	
5306-527-5909	24	25	5306-576-1940	11	35

STOCK NUMBER	FIGURE NUMBER	ITEM NUMBER	STOCK NUMBER	FIGURE NUMBER	ITEM NUMBER
5306-576-1941	89	3	5306-638-3693	12	40
5306-576-1945	88	18	5306-638-4278	BULK	
5306-576-1953	BULK		5306-638-4279	BULK	
5306-576-1960	169	21	5306-638-4834	BULK	
5306-576-1962	BULK		5306-638-5075	BULK	
5306-576-5635	79	70	5306-638-5303	16	33
5306-576-6316	37		5306-638-5303	16	64
5306-576-6317	37		5306-638-5757	41	171
5306-576-6318	37		5306-638-5757	41	175
5306-576-6321	37		5306-638-5757	41	180
5306-576-7739	70	4	5306-638-5757	41	184
5306-576-7739	70	8	5306-638-5757	87	123
5306-579-0205	BULK		5306-638-5766	165	36
5306-579-0256	37	35	5306-638-5914	BULK	
5306-579-0345	105	45	5306-638-8173	101	27
5306-579-0944	41	122	5306-638-8223	BULK	
5306-579-3372	24	5	5306-638-9218	184	9
5306-579-3374	24	23	5306-639-1451	102	4
5306-582-5752	BULK		5306-639-1454	12	67
5306-582-6395	87	160	5306-639-1456	BULK	
5306-584-5034	36	17	5306-639-1464	91	18
5306-584-5086	BULK		5306-639-1568	16	23
5306-584-5131	16	32	5306-639-1569	16	27
5306-584-5131	16	63	5306-639-1774	BULK	
5306-584-5325	BULK		5306-639-1845	BULK	
5306-584-5503	150	2	5306-639-2003	88	16
5306-584-8327	163	8			
5306-584-8465	162	31	5306-639-2279	107	3
5306-584-8938	162	49	5306-639-2302	91	50
5306-584-8938	162	50	5306-639-2302	102	16
5306-591-2447	106	117	5306-639-2305	12	66
5306-591-6672	156	2	5306-639-2347	BULK	
5306-591-8322	37		5306-639-2382	23	22
5306-592-1950	16		5306-639-2458	36	2
5306-608-6768	101	43	5306-639-2474	158	15
5306-614-5128	37	36	5306-639-2517	159	18
5306-614-5129	37		5306-639-2517	165	17
5306-616-1224	11D	41	5306-639-2747	16	
5306-616-1224	11D	45	5306-639-2761	163	3
5306-616-2148	91	21	5306-639-2765	87	107
5306-619-6458	16	11	5306-639-4440	12	24
5306-619-6459	12	39	5306-639-7135	79B	11
5306-620-8294	BULK		5306-639-7587	26	8
5306-626-3843	190	4	5306-639-7701	79	6
5306-629-1746	42	19	5306-639-7701	80	6
5306-630-2089	BULK		5306-639-7701	81	6
5306-630-2099	BULK		5306-655-6145	169	92
5306-631-3872	37	34	5306-655-9964	132	34
5306-631-3923	159	11	5306-656-0358	119	46
5306-637-1577	21		5306-671-5903	21	27
5306-637-1665	122	33	5306-671-5903	21	56
5306-637-1665	122	36	5306-680-5306	169	
5306-637-1665	BULK		5306-680-6308	183	11
5306-637-8583	11	11	5306-680-6309	183	13
5306-637-8633	17		5306-680-6309	183	2
5306-637-9681	165		5306-680-6309	183	9
5306-637-9703	187	39	5306-691-4466	112	33
5306-637-9703	187	8	5306-693-6976	16	
5306-637-9893	91	6	5306-697-8483	31	13
5306-638-1466	37		5306-697-8483	31	28
5306-638-1472	184	22	5306-717-5856	176	24
5306-638-1476	48	10	5306-717-5856	176	28
5306-638-2214	140	13	5306-720-7952	213A	3
5306-638-2214	141	24	5306-721-5509	16	1
5306-638-2216	182	18	5306-754-1787	33	40
5306-638-2217	182	19	5306-754-1787	BULK	
5306-638-2217	BULK		5306-754-1788	21	6
5306-638-2221	173	40	5306-754-1791	35A	8
5306-638-2225	119	28	5306-754-3048	79	76
5306-638-2650	26		5306-754-3049	35A	3
5306-638-2650	26	22	5306-754-3049	44A	10

STOCK NUMBER	FIGURE NUMBER	ITEM NUMBER	STOCK NUMBER	FIGURE NUMBER	ITEM NUMBER
5306-754-3049	44B	1	5307-166-1118	184	39
5306-759-9947	169	52	5307-166-1119	184	
5306-780-8452	157	15	5307-166-1169	206	
5306-807-0047	119	37	5307-169-3451	200	
5306-810-6376	36	23	5307-169-3460	200	26
5306-812-1831	37	6	5307-169-3461	200	
5306-814-5533	169	1	5307-169-3518	206	40
5306-814-5533	169	2	5307-206-2530	206	
5306-816-3223	183	3	5307-206-2531	206	
5306-817-5982	105	52	5307-206-2979	206	43
5306-843-9964	21	1	5307-206-2980	206	
5306-846-4772	26	5	5307-206-2981	206	
5306-846-4772	BULK		5307-206-7933	175A	113
5306-851-5166	BULK		5307-206-8810	114E	84
5306-853-1210	175G	10	5307-206-8810	114F	105
5306-853-9119	122		5307-206-9706	184	
5306-863-1235	37		5307-206-9706	BULK	
5306-950-0125	36	30	5307-207-1955	190	
5306-963-1129	118	109	5307-207-1956	190	
5306-963-1129	118	117	5307-207-5854	104	25
5306-989-4101	107	54	5307-207-5854	104	57
5307-012-9139	E85	1	5307-207-6236	200	
5307-012-9169	114C	36	5307-207-6239	207	
5307-025-8269	11	42	5307-207-6240	207	
5307-025-8272	178	68	5307-207-6244	184	
5307-025-8284	104		5307-207-6344	206	
5307-025-8292	30	20	5307-207-7566	200	
5307-025-8292	178	70	5307-207-7567	206	
5307-025-8293	157		5307-207-8174	214A	
5307-025-8295	157	53	5307-207-8175	214A	
5307-033-0386	208		5307-208-0629	BULK	
5307-033-0387	184		5307-208-0630	208	
5307-062-4370	200	27	5307-208-0631	200	29
5307-062-4371	200		5307-208-0631	BULK	
5307-062-4381	206		5307-208-0632	214A	337
5307-062-4384	198	15	5307-208-1158	198	16
5307-087-1697	184		5307-208-1158	200	28
5307-095-8780	113E	119	5307-208-1159	200	
5307-095-8781	113E	121	5307-208-1400	198	
5307-149-4341	200		5307-208-1400	200	
5307-149-4497	214A	334	5307-208-1406	198	
5307-149-4498	214A		5307-208-3845	206	37
5307-149-4502	214A	582	5307-208-5737	208	
5307-149-4503	214A		5307-208-5788	184	23
5307-149-4508	214A	487	5307-208-7035	206	67
5307-149-4509	214A		5307-208-7042	206	
5307-149-4520	208	33	5307-208-7043	206	
5307-149-4520	208	66	5307-208-7805	206	
5307-149-4567	206		5307-208-7806	206	
5307-149-4853	206	38	5307-215-9641	206	
5307-149-4855	206		5307-216-3041	208	
5307-149-4903	206		5307-216-3045	200	
5307-149-4951	198		5307-217-1830	214A	459
5307-149-4953	198		5307-217-1831	214A	
5307-149-4954	198		5307-217-1832	214A	
5307-149-4955	198	14	5307-219-7689	206	
5307-149-5254	208		5307-262-6584	184	38
5307-149-5255	208	40	5307-264-2421	184	
5307-149-5256	208		5307-264-2427	184	
5307-149-5257	208	39			
5307-149-5494	200	24	5307-264-2568	30	26
5307-149-5495	200		5307-271-8651	30	24
5307-149-5496	200		5307-276-2634	206	42
5307-149-5653	198		5307-276-2657	206	
5307-149-5659	208		5307-285-3918	190	
5307-149-9538	184		5307-285-3921	190	33
5307-149-9548	214A		5307-292-3012	198	17
5307-149-9598	200		5307-292-3013	198	
5307-149-9599	200		5307-297-3051	184	21
5307-149-9603	184		5307-297-8320	206	
5307-151-7736	214A	339	5307-297-8412	206	

STOCK NUMBER	FIGURE NUMBER	ITEM NUMBER	STOCK NUMBER	FIGURE NUMBER	ITEM NUMBER
5307-297-8579	214A		5307-639-5025	184	
5307-298-3028	214A		5307-639-6714	206	
5307-298-4296	214A	580	5307-639-6715	206	
5307-298-4297	214A		5307-639-7774	27	21
5307-321-3431	113E	76	5307-705-9754	208	
5307-321-3431	113E	78	5307-802-5701	114G	82
5307-329-0480	114P	98	5307-802-5701	114H	82
5307-329-0480	114Q	75	5307-802-5701	114J	68
5307-334-9621	208		5307-859-0788	212A	
5307-341-9067	A8	4	5307-877-4893	BULK	
5307-348-4636	113F	256	5307-945-4769	200	23
5307-371-0838	114A	4	5307-945-4770	200	
5307-397-9940	113E	242	5307-945-8069	200	
5307-445-6319	96		5307-980-9582	113B	94
5307-479-0022	184	41	5307-981-8779	158	
5307-479-0074	206	39	5310-011-1041	44C	16
5307-479-0336	200	25	5310-013-4524	113B	23
5307-484-9942	214A	408	5310-019-5478	114D	
5307-484-9949	214A		5310-022-1417	114P	
5307-485-1600	214A	581	5310-025-8009	114B	19
5307-485-1601	214A		5310-025-8009	114D	
5307-497-4004	157	51	5310-025-8140	113E	116
5307-515-6690	208		5310-032-0263	113F	196
5307-515-7290	200		5310-032-2347	212A	184
5307-515-8775	207	14	5310-032-2347	212A	75
5307-515-9149	214A	409	5310-033-2484	212A	16
5307-515-9150	214A	410	5310-033-5280	125A	147
5307-515-9151	214A		5310-033-5329	114E	30
5307-531-1414	79		5310-033-5329	114E	33
5307-533-5021	200		5310-033-5329	114F	28
5307-533-9862	214A	340	5310-037-9348	214A	239
5307-533-9862	214A	488	5310-045-3299	39	
5307-533-9877	214A	336	5310-045-3299	39	
5307-533-9877	214A	583	5310-045-3299	41	
5307-533-9917	214A	335	5310-045-3299	11D	34
5307-533-9917	214A	338	5310-045-3299	132	
5307-533-9918	214A		5310-045-3299	113F	154
5307-533-9919	214A		5310-045-3299	123B	25
5307-546-4394	28	31	5310-045-3299	128A	14
5307-550-0498	206		5310-045-3299	128A	25
5307-550-3767	113E	206	5310-045-3299	175A	98
5307-550-3767	113E	232	5310-045-3299	212A	11
5307-558-3359	37		5310-045-3299	212A	124
5307-559-9233	113E	229	5310-045-3299	212A	13
5307-566-3227	12	16	5310-045-3299	212A	165
5307-576-1101	113E	237	5310-045-3299	212A	175
5307-576-6663	184		5310-045-3299	212A	189
5307-584-5533	206	41	5310-045-3299	212A	25
5307-611-3935	198		5310-045-3299	212A	46
5307-616-2533	206		5310-045-3299	212A	62
5307-619-1338	184		5310-045-3299	212A	72
5307-632-9239	200		5310-045-3299	213A	6
5307-632-9247	208	59	5310-045-3299	214A	548
5307-637-0870	208	60	5310-045-4007	133	
5307-637-0871	208		5310-045-4007	81A	37
5307-637-0872	208		5310-045-4007	81A	46
5307-637-7224	184		5310-045-4007	114F	29
5307-637-7544	BULK		5310-045-4007	114G	40
5307-637-8908	157	52	5310-045-4007	114H	29
5307-637-9981	200		5310-045-4007	114H	43
5307-637-9983	200		5310-045-4007	114J	23
5307-638-2064	214A		5310-045-4007	123A	24
5307-638-6990	184	40	5310-045-4007	123A	27
5307-638-6990	198		5310-045-4007	123A	35
5307-638-9575	97	16	5310-045-4007	128A	151
5307-639-0650	131	85	5310-045-4007	128A	156
5307-639-0650	132	135	5310-045-4007	128A	19
5307-639-1617	30	14	5310-045-4007	128A	30
5307-639-1617	30	33	5310-045-4007	128A	44
5307-639-1617	79		5310-045-4007	128A	53
5307-639-1617	79	156	5310-045-4007	128A	78

STOCK NUMBER	FIGURE NUMBER	ITEM NUMBER	STOCK NUMBER	FIGURE NUMBER	ITEM NUMBER
5310-045-4007	128A	81	5310-088-0551	131	
5310-045-4007	128A	96	5310-088-0551	132	
5310-045-4007	212A	120	5310-088-0551	132	
5310-045-4007	212A	192	5310-088-0551	132	
5310-045-4007	212A	49	5310-088-0551	132	
5310-045-4007	212A	8	5310-088-0551	132	
5310-045-4007	212A	94	5310-088-0551	132	
5310-045-4007	212A	97	5310-088-0551	138	
5310-049-3993	114E	102	5310-088-0551	139	
5310-050-2254	114E	50	5310-088-0551	139	
5310-050-2254	114F	88	5310-088-0551	139	
5310-050-2254	114S	102	5310-088-0551	150	
5310-052-1556	114L	55	5310-088-0551	128A	103
5310-052-9732	BULK		5310-088-0552	24	
5310-052-9734	123B	2	5310-088-0552	24	5A
5310-053-9359	114G	102	5310-088-0553	22	2A
5310-053-9359	114G	92	5310-088-0553	22	3
5310-053-9359	114H	92	5310-088-0553	23	17A
5310-053-9359	114H	98	5310-088-0553	23	18
5310-053-9359	114J	77	5310-088-0553	25	
5310-053-9359	114J	83	5310-088-0553	32	172
5310-054-0566	114R	60	5310-088-0553	32	175
5310-058-2949	113A	13	5310-088-0553	32	179
5310-058-2949	113A	28	5310-088-0553	36	13
5310-058-2949	113A	5	5310-088-0553	36	4
5310-058-2949	114R	3	5310-088-0553	37	
5310-058-2951	214A	449	5310-088-0553	38	
5310-060-2039	43		5310-088-0553	41	
5310-060-2039	45		5310-088-0553	74	
5310-060-2039	46		5310-088-0553	75	
5310-060-2039	132		5310-088-0553	82	
5310-060-2039	139		5310-088-0553	82	12
5310-060-2039	152		5310-088-0553	82	28
5310-060-2039	170		5310-088-0553	82	37
5310-060-2039	170		5310-088-0553	82	54
5310-061-1803	BULK		5310-088-0553	82	78
5310-062-4954	BULK		5310-088-0553	83	
5310-063-6716	78		5310-088-0553	84	
5310-063-6716	BULK		5310-088-0553	87	
5310-063-6717	BULK		5310-088-0553	91	
5310-069-4255	114G	75	5310-088-0553	98	
5310-069-4255	114H	75	5310-088-0553	99	
5310-069-4255	114J	61	5310-088-0553	99	4A
5310-076-6090	202A	9	5310-088-0553	105	20
5310-081-8087	104		5310-088-0553	115	
5310-081-8087	128		5310-088-0553	120	
5310-081-8087	130		5310-088-0553	125	
5310-081-8087	131		5310-088-0553	151	15
5310-081-8087	131		5310-088-0553	151	21
5310-081-8087	131		5310-088-0553	155	
5310-081-8087	132		5310-088-0553	157	8
5310-081-8087	138		5310-088-0553	158	53A
5310-081-8087	139		5310-088-0553	158	73
5310-081-8087	162		5310-088-0553	158	77
5310-081-8087	125A	70	5310-088-0553	162	
5310-081-8087	125A	74	5310-088-0553	174	
5310-081-8087	128A	67	5310-088-0553	175	
5310-083-9020	178		5310-088-0553	176	
5310-087-7493	43	85	5310-088-0553	179	6
5310-087-7493	84		5310-088-0553	181	
5310-088-0551	67		5310-088-0553	182	14
5310-088-0551	67		5310-088-0553	184	14
5310-088-0551	75		5310-088-0553	185	1
5310-088-0551	96	50	5310-088-0553	205	19
5310-088-0551	128		5310-088-0553	206	3
5310-088-0551	128		5310-088-0553	206	60
5310-088-0551	129		5310-088-0553	213	2
5310-088-0551	131		5310-088-0553	76B	2
5310-088-0551	131		5310-088-0553	183A	
5310-088-0551	131		5310-090-0411	212A	18
5310-088-0551	131		5310-090-4606	190A	14

STOCK NUMBER	FIGURE NUMBER	ITEM NUMBER	STOCK NUMBER	FIGURE NUMBER	ITEM NUMBER
5310-094-3004	84A	8	5310-141-1795	BULK	
5310-094-3004	84B	11	5310-141-1795	175D	71
5310-094-3004	162A	8	5310-141-1795	175G	11
5310-095-4188	175F	4	5310-141-1795	214A	15
5310-095-4192	175F	25	5310-141-1795	214A	17
5310-095-4195	175F	26	5310-141-1795	214A	262
5310-095-4234	175C	5	5310-141-1795	214A	385
5310-095-7238	114P	53	5310-141-1795	214A	387
5310-095-7416	114P	51	5310-141-1795	214A	446
5310-095-7416	114Q	36	5310-141-1795	214A	508
5310-095-8266	114C	28	5310-141-1795	214A	51
5310-095-9977	113E	201	5310-141-1795	214A	55
5310-095-9977	113E	203	5310-141-1795	214A	57
5310-095-9977	113E	29	5310-141-1795	214A	59
5310-096-0374	114S	79	5310-141-1795	214A	61
5310-096-0440	114S	115	5310-141-1823	BULK	
5310-096-1424	113E		5310-141-3004	BULK	
5310-096-1425	113E		5310-141-3004	202A	15
5310-096-1426	113E		5310-141-3009	100	46
5310-096-1455	113E	160	5310-141-3010	91	29
5310-122-5606	12		5310-141-3010	100	19
5310-122-5606	19	20	5310-141-3022	123	
5310-122-5606	21	30	5310-141-3191	38	46
5310-122-5606	21	59	5310-141-3194	12	
5310-141-1795	12		5310-141-3229	113A	74
5310-141-1795	23		5310-141-3229	114R	57
5310-141-1795	25	14	5310-143-5516	175A	110
5310-141-1795	27		5310-143-5631	212A	207
5310-141-1795	37		5310-143-5807	175D	98
5310-141-1795	37	25	5310-146-6497	214A	81
5310-141-1795	38		5310-146-8442	96	63
5310-141-1795	51		5310-147-2014	214A	511
5310-141-1795	52		5310-147-2027	214A	142
5310-141-1795	54	57	5310-147-2052	214A	388
5310-141-1795	54	59	5310-147-6547	187	40
5310-141-1795	62	12	5310-147-6547	187	9
5310-141-1795	70		5310-147-6555	189	5
5310-141-1795	70	12	5310-147-9567	214A	29
5310-141-1795	74	22	5310-147-9567	214A	507
5310-141-1795	75	35	5310-148-4684	196	3
5310-141-1795	82		5310-148-4684	197	3
5310-141-1795	84		5310-148-4687	183A	
5310-141-1795	87		5310-148-5180	214A	556
5310-141-1795	88		5310-148-5180	214A	565
5310-141-1795	91		5310-148-8824	190A	2
5310-141-1795	101		5310-148-8832	BULK	
5310-141-1795	104		5310-148-8835	214A	214
5310-141-1795	104		5310-148-8871	215	5
5310-141-1795	104		5310-148-8885	214A	318
5310-141-1795	104	41	5310-149-7130	214A	374
5310-141-1795	104	9	5310-149-7130	214A	397
5310-141-1795	105		5310-149-9116	56	76
5310-141-1795	107		5310-149-9119	36	28
5310-141-1795	116		5310-149-9119	BULK	
5310-141-1795	119	15	5310-149-9120	36	32
5310-141-1795	120		5310-149-9130	BULK	
5310-141-1795	151		5310-149-9146	26	
5310-141-1795	153		5310-149-9146	101	45
5310-141-1795	155		5310-149-9146	183	
5310-141-1795	157		5310-149-9242	188	12
5310-141-1795	157		5310-149-9242	188	19
5310-141-1795	158		5310-149-9245	214A	73
5310-141-1795	158		5310-149-9282	214A	181
5310-141-1795	158		5310-149-9282	214A	34
5310-141-1795	158	35	5310-151-3966	190A	4
5310-141-1795	165		5310-152-2656	213	3
5310-141-1795	169		5310-166-5228	123	
5310-141-1795	169	36	5310-166-7153	113E	
5310-141-1795	172		5310-166-7154	113E	
5310-141-1795	175	6	5310-167-0662	18	
5310-141-1795	176		5310-167-0662	11D	17

STOCK NUMBER	FIGURE NUMBER	ITEM NUMBER	STOCK NUMBER	FIGURE NUMBER	ITEM NUMBER
5310-167-0662	11D	20	5310-167-0753	49	
5310-167-0662	11D	29	5310-167-0753	50	
5310-167-0662	11D	38	5310-167-0753	50	
5310-167-0662	11D	49	5310-167-0753	50	
5310-167-0662	11D	53	5310-167-0753	50	61
5310-167-0662	123B	9	5310-167-0753	52	
5310-167-0662	212A	109	5310-167-0753	54	
5310-167-0662	212A	113	5310-167-0753	55	
5310-167-0662	212A	116	5310-167-0753	55	62
5310-167-0662	212A	142	5310-167-0753	56	
5310-167-0662	212A	157	5310-167-0753	56	64
5310-167-0662	212A	168	5310-167-0753	56	95
5310-167-0662	212A	178	5310-167-0753	57	
5310-167-0662	212A	181	5310-167-0753	58	
5310-167-0662	212A	210	5310-167-0753	59	
5310-167-0662	212A	216	5310-167-0753	60	
5310-167-0662	212A	83	5310-167-0753	63	
5310-167-0662	212A	86	5310-167-0753	64	
5310-167-0662	213B	4	5310-167-0753	67	
5310-167-0662	214A	109	5310-167-0753	70	
5310-167-0662	214A	275	5310-167-0753	71	
5310-167-0667	190	55	5310-167-0753	72	
5310-167-0667	191	23	5310-167-0753	74	
5310-167-0667	191	4	5310-167-0753	75	
5310-167-0667	BULK		5310-167-0753	75	
5310-167-0667	113F	149	5310-167-0753	77	
5310-167-0667	123B	14	5310-167-0753	78	
5310-167-0671	198	23	5310-167-0753	78	13
5310-167-0685	55		5310-167-0753	78	2
5310-167-0685	57		5310-167-0753	79	
5310-167-0685	62		5310-167-0753	79	
5310-167-0685	70		5310-167-0753	79	
5310-167-0685	71		5310-167-0753	79	
5310-167-0685	72		5310-167-0753	79	
5310-167-0685	87		5310-167-0753	79	
5310-167-0685	97		5310-167-0753	79	138
5310-167-0685	101		5310-167-0753	80	
5310-167-0685	107		5310-167-0753	80	
5310-167-0685	107		5310-167-0753	80	
5310-167-0685	170		5310-167-0753	80	
5310-167-0686	93		5310-167-0753	81	
5310-167-0686	104		5310-167-0753	81	
5310-167-0686	158		5310-167-0753	81	
5310-167-0686	158		5310-167-0753	82	
5310-167-0725	67		5310-167-0753	84	
5310-167-0751	39	3	5310-167-0753	87	
5310-167-0751	167		5310-167-0753	90	
5310-167-0753	17		5310-167-0753	91	
5310-167-0753	32		5310-167-0753	92	5
5310-167-0753	33		5310-167-0753	94	
5310-167-0753	33		5310-167-0753	95	
5310-167-0753	35		5310-167-0753	96	
5310-167-0753	35		5310-167-0753	101	
5310-167-0753	35		5310-167-0753	105	
5310-167-0753	37		5310-167-0753	106	
5310-167-0753	39		5310-167-0753	112	
5310-167-0753	41		5310-167-0753	115	
5310-167-0753	41		5310-167-0753	116	
5310-167-0753	41		5310-167-0753	116	
5310-167-0753	41		5310-167-0753	118	
5310-167-0753	42		5310-167-0753	119	
5310-167-0753	43		5310-167-0753	122	
5310-167-0753	43	87	5310-167-0753	125	
5310-167-0753	44		5310-167-0753	132	
5310-167-0753	45		5310-167-0753	138	
5310-167-0753	46		5310-167-0753	140	
5310-167-0753	48		5310-167-0753	141	
5310-167-0753	49		5310-167-0753	141	
5310-167-0753	49		5310-167-0753	144	
5310-167-0753	49		5310-167-0753	145	
5310-167-0753	49		5310-167-0753	145	

STOCK NUMBER	FIGURE NUMBER	ITEM NUMBER	STOCK NUMBER	FIGURE NUMBER	ITEM NUMBER
5310-167-0753	147		5310-167-0818	52	
5310-167-0753	148		5310-167-0818	54	
5310-167-0753	149		5310-167-0818	56	
5310-167-0753	150		5310-167-0818	72	
5310-167-0753	152		5310-167-0818	104	
5310-167-0753	154		5310-167-0818	104	76
5310-167-0753	169		5310-167-0818	104	92
5310-167-0753	169	20A	5310-167-0818	105	
5310-167-0753	172		5310-167-0818	107	
5310-167-0753	173		5310-167-0818	108	
5310-167-0753	173		5310-167-0818	122	
5310-167-0753	176		5310-167-0818	122	
5310-167-0765	35		5310-167-0818	122	
5310-167-0765	63		5310-167-0818	122	
5310-167-0765	101		5310-167-0818	138	
5310-167-0765	116		5310-167-0818	169	
5310-167-0765	132		5310-167-0818	170	
5310-167-0765	182		5310-167-0818	172	
5310-167-0766	119		5310-167-0818	172	35
5310-167-0766	169	37	5310-167-0818	172	80
5310-167-0766	169	57A	5310-167-0818	173	
5310-167-0766	169	59A	5310-167-0818	176	
5310-167-0766	169	64A	5310-167-0818	178	
5310-167-0766	169	66A	5310-167-0818	178	13
5310-167-0766	169	78A	5310-167-0818	182	
5310-167-0766	169	80A	5310-167-0818	182	
5310-167-0768	84		5310-167-0818	190	
5310-167-0797	176		5310-167-0818	35A	10
5310-167-0797	113F	177	5310-167-0818	35A	25
5310-167-0797	113F	181	5310-167-0818	35A	4
5310-167-0801	50		5310-167-0818	79A	27
5310-167-0801	170		5310-167-0818	175B	29
5310-167-0803	150		5310-167-0818	175B	9
5310-167-0803	169		5310-167-0818	175D	30
5310-167-0804	43	23	5310-167-0818	175D	43
5310-167-0804	150		5310-167-0818	175D	47
5310-167-0805	146		5310-167-0818	175E	5
5310-167-0805	210	30	5310-167-0818	175G	3
5310-167-0805	BULK		5310-167-0818	175H	11
5310-167-0806	36	24	5310-167-0818	175H	32
5310-167-0806	BULK		5310-167-0818	214A	102
5310-167-0807	BULK		5310-167-0818	214A	138
5310-167-0809	118		5310-167-0818	214A	208
5310-167-0812	43		5310-167-0818	214A	222
5310-167-0812	160		5310-167-0818	214A	237
5310-167-0812	169		5310-167-0818	214A	301
5310-167-0812	170		5310-167-0818	214A	381
5310-167-0812	176		5310-167-0818	214A	383
5310-167-0816	104		5310-167-0818	214A	41
5310-167-0816	132	115	5310-167-0818	214A	440
5310-167-0816	132	117	5310-167-0818	214A	516
5310-167-0816	132	119	5310-167-0818	214A	522
5310-167-0816	146		5310-167-0818	214A	527
5310-167-0816	162		5310-167-0818	214A	99
5310-167-0816	191	30	5310-167-0820	23	
5310-167-0816	192	12	5310-167-0820	37	
5310-167-0816	192	20	5310-167-0820	38	
5310-167-0816	193	19	5310-167-0820	68	3
5310-167-0816	195	12	5310-167-0820	98	
5310-167-0816	195	8	5310-167-0820	99	
5310-167-0816	79A	45	5310-167-0820	101	
5310-167-0816	81A	29	5310-167-0820	105	
5310-167-0818	11		5310-167-0820	122	
5310-167-0818	12		5310-167-0820	157	
5310-167-0818	16		5310-167-0820	157	
5310-167-0818	25	3	5310-167-0820	158	
5310-167-0818	39	11	5310-167-0820	158	53
5310-167-0818	46		5310-167-0820	162	
5310-167-0818	49		5310-167-0820	165	
5310-167-0818	50		5310-167-0820	176	
5310-167-0818	50		5310-167-0820	181	31

STOCK NUMBER	FIGURE NUMBER	ITEM NUMBER	STOCK NUMBER	FIGURE NUMBER	ITEM NUMBER
5310-167-0820	76B	3	5310-167-0836	175	3
5310-167-0821	12		5310-167-0837	12	
5310-167-0821	12		5310-167-0837	15	
5310-167-0821	12		5310-167-0859	128A	122
5310-167-0821	15		5310-167-0889	77	
5310-167-0821	19	16	5310-167-1273	68	
5310-167-0821	47	5	5310-167-1280	214A	445
5310-167-0821	68	7	5310-167-1281	42	
5310-167-0821	84	35	5310-167-1281	212A	196
5310-167-0821	132	127	5310-167-1284	104	
5310-167-0821	132	129	5310-167-1284	175E	
5310-167-0821	132	132	5310-167-1284	214A	515
5310-167-0821	132	134	5310-167-1285	38	
5310-167-0821	158		5310-167-1285	90	23
5310-167-0821	175	9	5310-167-1285	96	
5310-167-0821	176		5310-167-1285	169	
5310-167-0821	176	18	5310-167-1285	35A	12
5310-167-0821	183		5310-167-1285	125B	4
5310-167-0822	12	70	5310-167-1285	125B	6
5310-167-0822	13		5310-167-1285	214A	261
5310-167-0822	14		5310-167-1286	21	16A
5310-167-0822	16		5310-167-1286	101	
5310-167-0822	16	28	5310-167-1286	214A	298
5310-167-0822	122		5310-167-1288	16	
5310-167-0822	123		5310-167-1289	38	25
5310-167-0822	144		5310-167-1289	167	
5310-167-0822	162		5310-167-1300	38	14
5310-167-0822	208	8	5310-167-1300	38	6
5310-167-0823	12		5310-167-1300	68	9
5310-167-0823	12	2	5310-167-1300	87	
5310-167-0823	38		5310-167-1300	87	100
5310-167-0823	38	24	5310-167-1300	87	114
5310-167-0823	56		5310-167-1300	87	126
5310-167-0823	84	27	5310-167-1300	87	130
5310-167-0823	84	33	5310-167-1300	87	136
5310-167-0823	107	12	5310-167-1300	87	144
5310-167-0823	162		5310-167-1300	87	155
5310-167-0823	176	39	5310-167-1300	87	20
5310-167-0823	84A	2	5310-167-1300	87	26
5310-167-0823	84B	6	5310-167-1300	87	42
5310-167-0823	84B	8	5310-167-1300	87	48
5310-167-0824	162		5310-167-1300	87	66
5310-167-0825	16	21	5310-167-1300	87	72
5310-167-0825	84	28	5310-167-1300	88	5
5310-167-0825	BULK		5310-167-1300	123	64
5310-167-0826	123		5310-167-1300	159	15
5310-167-0827	BULK		5310-167-1300	159	3
5310-167-0828	BULK		5310-167-1300	159	33
5310-167-0832	123B	53	5310-167-1300	159	8
5310-167-0833	90A	5	5310-167-1300	169	28
5310-167-0834	25	1	5310-167-1300	169	31
5310-167-0834	122		5310-167-1300	169	41
5310-167-0834	81A	12	5310-167-1300	169	44
5310-167-0834	123B	44	5310-167-1300	175G	12
5310-167-0834	125A	63	5310-167-1302	106	116
5310-167-0834	175A	39	5310-167-1343	104	
5310-167-0834	175C	3	5310-167-1343	105	5
5310-167-0835	15		5310-167-1343	212A	156
5310-167-0835	26	2	5310-167-1343	212A	167
5310-167-0835	169		5310-167-1344	190	54
5310-167-0835	35A	13	5310-167-1347	12	14
5310-167-0835	35A	16	5310-167-1373	BULK	
5310-167-0835	79A	2	5310-167-1373	113E	151
5310-167-0835	125A	3	5310-167-4433	198	3
5310-167-0836	21		5310-167-4451	214A	117
5310-167-0836	37		5310-167-4451	214A	267
5310-167-0836	70	16	5310-168-5086	208	7
5310-167-0836	105		5310-168-5114	188	36
5310-167-0836	169	35	5310-168-5118	199	2
5310-167-0836	174	4	5310-171-6990	26	
5310-167-0836	174	8	5310-171-6990	26	24

STOCK NUMBER	FIGURE NUMBER	ITEM NUMBER	STOCK NUMBER	FIGURE NUMBER	ITEM NUMBER
5310-176-8103	107		5310-181-4621	113E	
5310-176-8108	26		5310-181-4621	113E	
5310-176-8108	45		5310-181-4623	113E	
5310-176-8108	87		5310-183-4356	174	
5310-176-8108	87		5310-183-4356	182	
5310-176-8108	87		5310-183-4397	182	
5310-176-8108	87		5310-183-4406	11	
5310-176-8108	87		5310-183-4406	11	36
5310-176-8108	87		5310-183-4406	18	
5310-176-8108	88		5310-183-4406	32	
5310-176-8108	88		5310-183-4406	34	
5310-176-8108	88		5310-183-4406	39	
5310-176-8108	88		5310-183-4406	41	
5310-176-8108	91		5310-183-4406	43	
5310-176-8108	91		5310-183-4406	44	
5310-176-8108	91		5310-183-4406	45	
5310-176-8108	91		5310-183-4406	46	68
5310-176-8108	93		5310-183-4406	47	
5310-176-8108	101		5310-183-4406	48	
5310-176-8108	102		5310-183-4406	49	
5310-176-8108	104		5310-183-4406	50	
5310-176-8108	107		5310-183-4406	50	32
5310-176-8108	122		5310-183-4406	51	
5310-176-8108	122		5310-183-4406	52	
5310-176-8108	152		5310-183-4406	53	
5310-176-8108	153		5310-183-4406	54	
5310-176-8108	158		5310-183-4406	54	
5310-176-8108	158		5310-183-4406	54	
5310-176-8108	159		5310-183-4406	54	
5310-176-8109	102		5310-183-4406	55	
5310-176-8109	103		5310-183-4406	56	
5310-176-8109	105		5310-183-4406	56	53
5310-176-8109	122		5310-183-4406	56	96
5310-176-8109	153		5310-183-4406	57	
5310-176-8109	159		5310-183-4406	59	
5310-176-8109	160		5310-183-4406	60	
5310-176-8110	12		5310-183-4406	61	
5310-176-8110	21	24	5310-183-4406	62	
5310-176-8110	21	53	5310-183-4406	67	
5310-176-8110	175A	3	5310-183-4406	67	
5310-176-8111	12		5310-183-4406	69	
5310-176-8111	12	12	5310-183-4406	73	
5310-176-8111	13		5310-183-4406	74	
5310-176-8111	14		5310-183-4406	75	
5310-176-8111	162		5310-183-4406	75	
5310-176-8111	BULK		5310-183-4406	77	
5310-176-8112	12		5310-183-4406	79	
5310-176-8112	38	48	5310-183-4406	81	
5310-176-8112	162		5310-183-4406	83	
5310-176-8125	113B	16	5310-183-4406	84	
5310-176-8133	128A	45	5310-183-4406	84	
5310-176-8133	128A	54	5310-183-4406	85	
5310-176-8135	18		5310-183-4406	85	
5310-176-8135	41		5310-183-4406	85	
5310-176-8135	104	16	5310-183-4406	87	
5310-176-8135	104	48	5310-183-4406	87	
5310-176-8196	175D	3	5310-183-4406	87	
5310-180-8925	114H	70	5310-183-4406	87	
5310-180-8925	114J		5310-183-4406	87	
5310-181-4217	113E		5310-183-4406	87	
5310-181-4218	113E		5310-183-4406	88	
5310-181-4219	113E	231	5310-183-4406	89	
5310-181-4219	113E	239	5310-183-4406	91	
5310-181-4220	113E		5310-183-4406	96	
5310-181-4614	113E		5310-183-4406	100	
5310-181-4615	113E		5310-183-4406	101	
5310-181-4616	113E		5310-183-4406	102	
5310-181-4617	113E		5310-183-4406	104	
5310-181-4618	113E		5310-183-4406	105	
5310-181-4619	113E		5310-183-4406	106	
5310-181-4620	113E		5310-183-4406	106	

STOCK NUMBER	FIGURE NUMBER	ITEM NUMBER	STOCK NUMBER	FIGURE NUMBER	ITEM NUMBER
5310-183-4406	106		5310-183-4406	152	
5310-183-4406	106	63	5310-183-4406	154	
5310-183-4406	107		5310-183-4406	158	
5310-183-4406	108		5310-183-4406	159	
5310-183-4406	109		5310-183-4406	162	
5310-183-4406	112		5310-183-4406	165	
5310-183-4406	115		5310-183-4406	172	
5310-183-4406	115		5310-183-4406	178	
5310-183-4406	115		5310-183-4406	180	
5310-183-4406	115	101	5310-183-4406	182	
5310-183-4406	116		5310-183-7998	114A	10
5310-183-4406	116		5310-184-8966	41	
5310-183-4406	117		5310-184-8966	42	
5310-183-4406	117		5310-184-8966	43	
5310-183-4406	117		5310-184-8966	43	3
5310-183-4406	117		5310-184-8966	44	
5310-183-4406	117		5310-184-8966	45	
5310-183-4406	117		5310-184-8966	46	
5310-183-4406	117		5310-184-8966	48	
5310-183-4406	117	104	5310-184-8966	50	
5310-183-4406	118		5310-184-8966	57	
5310-183-4406	118		5310-184-8966	58	
5310-183-4406	118		5310-184-8966	68	
5310-183-4406	118		5310-184-8966	70	
5310-183-4406	118		5310-184-8966	75	
5310-183-4406	118		5310-184-8966	78	
5310-183-4406	118		5310-184-8966	94	
5310-183-4406	118		5310-184-8966	100	
5310-183-4406	118		5310-184-8966	101	
5310-183-4406	119		5310-184-8966	102	
5310-183-4406	120		5310-184-8966	104	
5310-183-4406	120		5310-184-8966	106	
5310-183-4406	120		5310-184-8966	108	
5310-183-4406	120		5310-184-8966	115	
5310-183-4406	122		5310-184-8966	115	
5310-183-4406	122		5310-184-8966	116	
5310-183-4406	122		5310-184-8966	118	
5310-183-4406	123		5310-184-8966	122	
5310-183-4406	123		5310-184-8966	123	
5310-183-4406	123	87	5310-184-8966	126	
5310-183-4406	123	90	5310-184-8966	128	
5310-183-4406	124		5310-184-8966	129	
5310-183-4406	124		5310-184-8966	130	
5310-183-4406	128		5310-184-8966	130	9
5310-183-4406	128		5310-184-8966	131	
5310-183-4406	129		5310-184-8966	131	
5310-183-4406	130		5310-184-8966	131	
5310-183-4406	132		5310-184-8966	132	
5310-183-4406	132		5310-184-8966	132	
5310-183-4406	132		5310-184-8966	132	
5310-183-4406	132		5310-184-8966	132	
5310-183-4406	132		5310-184-8966	133	
5310-183-4406	132		5310-184-8966	138	
5310-183-4406	132	40	5310-184-8966	138	
5310-183-4406	136		5310-184-8966	139	
5310-183-4406	136		5310-184-8966	139	
5310-183-4406	137		5310-184-8966	140	
5310-183-4406	138		5310-184-8966	146	
5310-183-4406	138		5310-184-8966	149	
5310-183-4406	139		5310-184-8966	152	
5310-183-4406	140		5310-184-8966	153	
5310-183-4406	141		5310-184-8966	154	
5310-183-4406	144		5310-184-8966	154	
5310-183-4406	145		5310-184-8966	154	
5310-183-4406	148		5310-184-8966	170	
5310-183-4406	148		5310-184-8966	170	
5310-183-4406	148		5310-184-8968	79	
5310-183-4406	148		5310-184-8968	175A	31
5310-183-4406	149		5310-184-8971	131	
5310-183-4406	150		5310-184-8973	12	
5310-183-4406	152		5310-184-8973	13	

STOCK NUMBER	FIGURE NUMBER	ITEM NUMBER	STOCK NUMBER	FIGURE NUMBER	ITEM NUMBER
5310-184-8973	14		5310-184-9001	75	
5310-184-8973	16		5310-184-9001	75	20
5310-184-8973	16		5310-184-9001	76	
5310-184-8973	16	74	5310-184-9001	78	
5310-184-8973	16	80	5310-184-9001	79	
5310-184-8973	16	84	5310-184-9001	79	
5310-184-8973	184		5310-184-9001	79	
5310-184-8974	16		5310-184-9001	79	
5310-184-8974	16		5310-184-9001	79	
5310-184-8974	25	93	5310-184-9001	79	
5310-184-8974	36	18	5310-184-9001	79	
5310-184-8974	179	10	5310-184-9001	79	
5310-184-8974	183		5310-184-9001	79	
5310-184-8974	183		5310-184-9001	79	151
5310-184-8974	184	4	5310-184-9001	79	154
5310-184-8974	200	3	5310-184-9001	80	
5310-184-8974	206	56	5310-184-9001	80	
5310-184-8974	206	65	5310-184-9001	80	
5310-184-8974	207	4	5310-184-9001	80	
5310-184-8974	208	77	5310-184-9001	81	
5310-184-8976	39	4	5310-184-9001	81	
5310-184-8977	77		5310-184-9001	81	
5310-184-8977	132	121	5310-184-9001	81	
5310-184-8980	32		5310-184-9001	81	
5310-184-8980	32		5310-184-9001	81	
5310-184-8980	32		5310-184-9001	81	
5310-184-8980	32	178	5310-184-9001	81	
5310-184-8980	37		5310-184-9001	81	
5310-184-8980	42		5310-184-9001	87	
5310-184-8980	50		5310-184-9001	87	
5310-184-8980	75		5310-184-9001	87	
5310-184-8980	87		5310-184-9001	87	
5310-184-8980	101		5310-184-9001	90	
5310-184-8980	102		5310-184-9001	96	
5310-184-8980	105		5310-184-9001	96	
5310-184-8980	115	65	5310-184-9001	97	
5310-184-8980	119	18	5310-184-9001	98	
5310-184-8980	120	10	5310-184-9001	101	
5310-184-8980	120	54	5310-184-9001	101	
5310-184-8980	120	59	5310-184-9001	101	
5310-184-8980	120	65	5310-184-9001	105	
5310-184-8980	125		5310-184-9001	107	
5310-184-8980	125		5310-184-9001	116	
5310-184-8980	160		5310-184-9001	117	
5310-184-8980	163		5310-184-9001	125	
5310-184-8980	169	34	5310-184-9001	125	
5310-184-8985	12		5310-184-9001	129	
5310-184-8985	162		5310-184-9001	151	
5310-184-9001	17		5310-184-9001	153	
5310-184-9001	25		5310-184-9001	155	
5310-184-9001	32		5310-184-9001	176	
5310-184-9001	37		5310-184-9002	34	
5310-184-9001	38		5310-184-9002	77	
5310-184-9001	39		5310-185-0113	130	1
5310-184-9001	41		5310-187-2354	11	
5310-184-9001	41		5310-187-2354	11	28
5310-184-9001	43		5310-187-2354	12	49
5310-184-9001	45		5310-187-2354	17	
5310-184-9001	46		5310-187-2354	19	
5310-184-9001	55		5310-187-2354	21	
5310-184-9001	56		5310-187-2354	23	
5310-184-9001	56	71	5310-187-2354	24	
5310-184-9001	58	2	5310-187-2354	35	
5310-184-9001	60		5310-187-2354	37	
5310-184-9001	64		5310-187-2354	38	
5310-184-9001	65		5310-187-2354	39	
5310-184-9001	66		5310-187-2354	41	
5310-184-9001	67		5310-187-2354	41	
5310-184-9001	70		5310-187-2354	41	
5310-184-9001	72		5310-187-2354	41	135
5310-184-9001	74	11	5310-187-2354	43	17

STOCK NUMBER	FIGURE NUMBER	ITEM NUMBER	STOCK NUMBER	FIGURE NUMBER	ITEM NUMBER
5310-187-2354	45		5310-187-2354	118	
5310-187-2354	45		5310-187-2354	118	
5310-187-2354	45		5310-187-2354	118	
5310-187-2354	48		5310-187-2354	118	
5310-187-2354	55		5310-187-2354	118	
5310-187-2354	56		5310-187-2354	118	110
5310-187-2354	59		5310-187-2354	118	118
5310-187-2354	60		5310-187-2354	118	143
5310-187-2354	61		5310-187-2354	118	43
5310-187-2354	62	1	5310-187-2354	118	92
5310-187-2354	62	13	5310-187-2354	119	
5310-187-2354	66		5310-187-2354	122	
5310-187-2354	67		5310-187-2354	122	
5310-187-2354	69		5310-187-2354	122	
5310-187-2354	71	3	5310-187-2354	124	
5310-187-2354	71	5	5310-187-2354	129	
5310-187-2354	73		5310-187-2354	129	
5310-187-2354	76		5310-187-2354	138	
5310-187-2354	78		5310-187-2354	138	
5310-187-2354	79		5310-187-2354	145	
5310-187-2354	79	100	5310-187-2354	152	
5310-187-2354	79	107	5310-187-2354	152	
5310-187-2354	79	118	5310-187-2354	153	
5310-187-2354	79	125	5310-187-2354	156	
5310-187-2354	79	178	5310-187-2354	159	
5310-187-2354	80		5310-187-2354	165	
5310-187-2354	81		5310-187-2354	165	
5310-187-2354	81		5310-187-2354	165	
5310-187-2354	84		5310-187-2354	174	
5310-187-2354	85		5310-187-2354	83A	4
5310-187-2354	87		5310-187-2395	12	
5310-187-2354	87		5310-187-2395	98	
5310-187-2354	87		5310-187-2395	99	
5310-187-2354	87		5310-187-2395	125	
5310-187-2354	87		5310-187-2395	170	17
5310-187-2354	87		5310-187-2395	170	20
5310-187-2354	87		5310-187-2398	55	
5310-187-2354	87		5310-187-2398	57	
5310-187-2354	87		5310-187-2398	77	
5310-187-2354	88		5310-187-2398	77	
5310-187-2354	88		5310-187-2398	94	
5310-187-2354	88		5310-187-2398	96	
5310-187-2354	89		5310-187-2398	96	
5310-187-2354	91		5310-187-2398	104	
5310-187-2354	91		5310-187-2398	106	
5310-187-2354	91		5310-187-2398	118	
5310-187-2354	91		5310-187-2398	118	
5310-187-2354	93		5310-187-2398	118	
5310-187-2354	96		5310-187-2398	130	
5310-187-2354	96		5310-187-2398	131	
5310-187-2354	96		5310-187-2398	132	
5310-187-2354	99		5310-187-2398	136	
5310-187-2354	101		5310-187-2398	138	
5310-187-2354	102		5310-187-2398	139	
5310-187-2354	105		5310-187-2399	21	
5310-187-2354	107		5310-187-2399	41	
5310-187-2354	108		5310-187-2399	74	
5310-187-2354	109		5310-187-2399	83	
5310-187-2354	116		5310-187-2399	84	
5310-187-2354	117		5310-187-2399	87	
5310-187-2354	117		5310-187-2399	91	
5310-187-2354	117		5310-187-2399	93	
5310-187-2354	117		5310-187-2399	101	
5310-187-2354	117		5310-187-2399	102	
5310-187-2354	117		5310-187-2399	103	6
5310-187-2354	117		5310-187-2399	105	
5310-187-2354	117		5310-187-2399	116	
5310-187-2354	117		5310-187-2399	116	14
5310-187-2354	117		5310-187-2399	119	
5310-187-2354	117	4	5310-187-2399	153	
5310-187-2354	118		5310-187-2399	159	

STOCK NUMBER	FIGURE NUMBER	ITEM NUMBER
5310-187-2399	162	
5310-187-2399	163	
5310-187-2399	165	
5310-187-2399	170	
5310-187-2399	173	
5310-187-2400	11	21
5310-187-2400	12	
5310-187-2400	39	6
5310-187-2400	50	113
5310-187-2400	84	
5310-187-2400	87	
5310-187-2400	93	
5310-187-2400	132	
5310-187-2400	165	
5310-187-2400	172	94
5310-187-2401	12	
5310-187-2401	85	
5310-187-2401	145	
5310-187-2401	181	
5310-187-2402	123	71
5310-187-2402	145	
5310-187-2403	83	22
5310-187-2404	145	
5310-187-2404	145	
5310-187-2405	41	
5310-187-2405	80	124
5310-187-2405	81	107
5310-187-2405	145	
5310-187-2405	145	
5310-187-2413	131	
5310-187-2413	131	82
5310-187-2413	138	18
5310-188-3744	82	
5310-188-3744	200	6
5310-188-7721	11	
5310-188-7721	47	
5310-188-7721	95	
5310-188-7721	115	
5310-188-7721	128	
5310-188-7721	130	
5310-188-7721	131	
5310-188-7721	131	
5310-188-7721	132	
5310-188-7721	132	
5310-188-7721	132	
5310-188-7721	132	
5310-188-7721	134	
5310-188-7721	138	
5310-188-7721	139	
5310-188-7721	140	
5310-188-7721	141	
5310-188-7721	154	
5310-188-7721	858	27

STOCK NUMBER	FIGURE NUMBER	ITEM NUMBER
5310-188-7971	48	32
5310-188-7971	BULK	
5310-188-7972	BULK	
5310-190-2885	114B	39
5310-190-2885	114B	71
5310-190-2885	114D	100
5310-190-2885	114D	41
5310-190-2885	114D	78
5310-190-2907	114S	45
5310-190-2959	132	
5310-194-0634	131	68
5310-194-0634	131	76
5310-194-0636	16	24
5310-194-0636	22	
5310-194-0636	25	
5310-194-0636	25	44
5310-194-0636	36	12
5310-194-0636	36	3
5310-194-0636	82	
5310-194-0636	155	39
5310-194-0636	155	41
5310-194-0636	179	3
5310-194-0636	179	5
5310-194-0636	184	10
5310-194-0636	185	2
5310-194-0636	190	
5310-194-0636	190	66
5310-194-0636	198	35
5310-194-0636	205	20
5310-194-0636	206	4
5310-194-0636	206	6
5310-194-0636	207	20
5310-194-0636	208	10
5310-194-0636	208	3
5310-194-0636	209	3
5310-194-0636	209	7
	36	
	82	
	151	
	151	
	155	
	155	
	179	
	184	
	185	
	187	
	190	
	200	
	205	
	207	
	208	
	208	
	208	
	210	
	211	
	BULK	
	190A	
	202A	
5310-196-6676	BULK	
5310-199-7719	175F	22
5310-200-7749	16	66
5310-200-7749	18	4
5310-200-7749	26	28
5310-200-7749	27	19
5310-200-7749	27	20
5310-200-7749	30	13
5310-200-7749	30	25
5310-200-7749	30	32

STOCK NUMBER	FIGURE NUMBER	ITEM NUMBER	STOCK NUMBER	FIGURE NUMBER	ITEM NUMBER
5310-200-7749	30	34	5310-209-3652	175A	54
5310-200-7749	34	33	5310-209-3652	175A	86
5310-200-7749	79		5310-209-3820	98	18
5310-200-7749	79	155	5310-209-3820	98	5
5310-200-7749	80	130	5310-209-3820	99	4
5310-200-7749	80	47	5310-209-3836	BULK	
5310-200-7749	81	111	5310-209-4097	105	22
5310-200-7749	81	36	5310-209-4115	200	9
5310-200-7749	104	24	5310-209-4732	97	14
5310-200-7749	104	56	5310-209-4907	113A	50
5310-200-7749	157		5310-209-4907	114R	36
5310-200-7749	165	69	5310-209-5392	44B	20
5310-205-8211	19		5310-209-5749	214A	248
5310-205-8491	16		5310-209-6357	96	79
5310-205-9251	113E	226	5310-209-6374	179	4
5310-205-9966	BULK		5310-209-6474	114B	36
5310-207-9065	113F	162	5310-209-6474	114D	38
5310-207-9078	175D	27	5310-209-6894	165	30
5310-207-9274	39	7	5310-215-8348	113E	152
5310-207-9274	214A	227	5310-215-8348	113E	269
5310-208-2326	173	37	5310-215-9615	187	21
5310-208-3155	175D	49	5310-217-1565	32	195
5310-208-3438	114E	43	5310-217-1565	144	132
5310-208-3438	114F	55	5310-217-1565	145	182
5310-208-3467	109		5310-217-1852	212A	190
5310-208-3468	114P	2	5310-219-7548	BULK	
5310-208-3755	105		5310-222-0671	131	
5310-208-3892	165	47	5310-222-0671	175A	102
5310-208-4023	BULK				
5310-208-4107	A3	7			
5310-208-4112	22	6	5310-222-4241	58	
5310-208-4112	76	4	5310-261-7437	44C	18
5310-208-4112	76	46	5310-261-7437	113A	25
5310-208-4112	174	12	5310-261-7437	113A	8
5310-208-4112	174	22	5310-261-7437	113B	103
5310-208-4112	182	12	5310-261-7437	114R	17
5310-208-4134	74	8	5310-261-7437	114R	6
5310-208-4134	75	8	5310-261-8278	79	
5310-208-4135	BULK		5310-261-8278	80	
5310-208-4997	56	65	5310-261-8278	81	
5310-208-5297	114P	99	5310-262-4868	181A	38
5310-208-5775	145	38	5310-262-5076	132	114
5310-208-5775	BULK		5310-262-5076	132	116
5310-208-5986	16	46	5310-262-5076	132	118
5310-208-5986	16	95	5310-262-5076	132	120
5310-208-5987	18	10	5310-262-5516	188	40
5310-208-6734	28	9	5310-262-5908	BULK	
5310-208-6797	12	17	5310-262-5908	212A	9
5310-208-8942	26		5310-262-5908	212A	95
5310-208-9072	16	14	5310-262-6183	92	3
5310-208-9073	18	6	5310-262-8327	96	10
5310-208-9141	113F	169	5310-263-2862	46	
5310-209-0026	91		5310-263-2862	112	
5310-209-0027	91		5310-263-2862	169	
5310-209-0158	175F	33	5310-263-2862	169	
5310-209-0197	181A	50	5310-264-1059	123	
5310-209-0295	176		5310-264-1135	113F	103
5310-209-0865	113F	116	5310-264-1389	BULK	
5310-209-0865	113F	36	5310-264-1389	123B	3
5310-209-0865	113F	9	5310-264-1390	BULK	
5310-209-2062	181A	19	5310-264-1995	113E	68
5310-209-2401	96	76	5310-264-1995	113E	75
5310-209-2414	97	26	5310-264-1995	114A	9
5310-209-2708	214A	320	5310-266-0516	112	
5310-209-2883	190	27	5310-266-0577	214A	363
5310-209-2931	178	44	5310-268-6035	162	39
5310-209-2932	178	66	5310-268-6049	200	49
5310-209-3052	214A	49	5310-268-6049	205	13
5310-209-3573	105	19	5310-268-6054	BULK	
5310-209-3573	105	29	5310-270-7127	175A	91
5310-209-3631	211		5310-271-3204	175D	52

STOCK NUMBER	FIGURE NUMBER	ITEM NUMBER	STOCK NUMBER	FIGURE NUMBER	ITEM NUMBER
5310-271-6624	204	7	5310-282-7823	81	24
5310-272-7041	131	51	5310-282-7823	85	14
5310-272-7041	132	75	5310-282-7823	124	12
5310-272-7041	150	122	5310-282-7823	124	39
5310-274-4551	193	3	5310-282-7823	124	42
5310-274-4551	213	6	5310-282-7823	124	5
5310-274-7947	214A	224	5310-282-7823	124	50
5310-274-9377	180		5310-282-7823	124	57
5310-275-0387	96	41	5310-282-7823	124	58
5310-275-0387	96	83	5310-282-7823	124	69
5310-275-0387	98	10	5310-282-7823	124	7
5310-275-0387	98	23	5310-282-7823	145	137
5310-275-0387	99	7	5310-282-7833	79	105
5310-275-0387	106	114	5310-282-7833	79	123
5310-275-0787	190	68	5310-282-7833	84	9
5310-275-1745	114A	2	5310-282-7833	182	5
5310-275-1745	114C	38	5310-282-7833	BULK	
5310-275-1745	114L	4	5310-282-7834	31	9
5310-275-1791	113F	31	5310-282-7834	79	150
5310-275-1994	118		5310-282-7834	80	123
5310-275-2016	11		5310-282-7834	81	106
5310-275-2016	28	1	5310-282-7834	145	117
5310-275-2016	87		5310-282-7834	145	53
5310-275-2016	93		5310-282-7835	75	13
5310-275-2016	11D	12	5310-282-7835	80	53
5310-275-2016	125		5310-282-7835	145	101
5310-275-2016	165				
5310-275-2016	207	3	5310-282-7848	56	
5310-275-2017			5310-285-2177	42	
5310-275-2021	129		5310-285-2177	87	
5310-275-2021	212A	2	5310-285-2177	104	
			5310-285-2177	107	
			5310-285-2177	107	
			5310-285-2177	108	
			5310-285-2177	122	
			5310-285-2177	214A	23
5310-275-2038	162		5310-285-2177	214A	33
			5310-285-5638	12	3
			5310-285-5638	36	25
5310-275-4300	BULK		5310-285-5638	38	
5310-275-4303	BULK		5310-285-5638	84	26
5310-275-5635	113F	199	5310-285-5638	84	32
5310-276-1117	123		5310-285-7640	BULK	
5310-276-1117	123		5310-286-3183	25	67
5310-276-1214	BULK		5310-286-3183	25	72
5310-276-1226	114D		5310-286-3741	113F	239
5310-276-1226	114L	9	5310-286-8884	114G	26
5310-276-2761	176		5310-286-9297	187	45
5310-281-3114	30	30	5310-286-9596	92	14
5310-281-3146	96	134	5310-286-9625	175A	106
5310-281-5382	210		5310-286-9642	18	8
5310-281-5383	210	18	5310-286-9673	214A	194
5310-281-6889	114R	61	5310-286-9677	214A	96
5310-281-9159	191		5310-286-9678	214A	368
5310-281-9190	37	17	5310-286-9678	214A	391
5310-281-9221	16	68	5310-290-0796	16	
5310-281-9224	11	41	5310-297-3339	113A	51
5310-281-9224	30	8	5310-297-3339	114R	37
5310-281-9224	178	67	5310-297-3715	36	33
5310-282-4776	36	31	5310-297-3716	16	22
5310-282-4777	41	56	5310-297-3716	BULK	
5310-282-4777	104A	4	5310-297-3720	BULK	
5310-282-7817	173	32	5310-297-3722	12	71
5310-282-7822	BULK		5310-297-3722	16	26
5310-282-7823	11	4	5310-297-3722	16	30
5310-282-7823	31	2	5310-297-3722	16	76
5310-282-7823	31	5	5310-297-3722	16	82
5310-282-7823	77	9	5310-297-3722	16	86
5310-282-7823	78	4	5310-297-4068	91	
5310-282-7823	78	9	5310-298-2747	BULK	
5310-282-7823	80	35	5310-298-7397	44B	14

STOCK NUMBER	FIGURE NUMBER	ITEM NUMBER	STOCK NUMBER	FIGURE NUMBER	ITEM NUMBER
5310-299-1048	175E	9	5310-442-2486	214A	24
5310-299-1049	175E	11	5310-442-2486	214A	26
5310-299-1051	175E	13	5310-442-2486	214A	27
5310-302-6514	188	31	5310-442-2486	214A	28
5310-303-0404	113E	277	5310-443-1299	114P	28
5310-303-1358	187	24	5310-443-1299	114Q.	12
5310-303-1362	190	5	5310-443-1580	114P	59
5310-303-2535	38	66	5310-443-1580	114Q	41
5310-305-7612	164	4	5310-474-3808	175H	25
5310-305-7613	166	4	5310-474-9811	11D	43
5310-305-7614	177	5	5310-474-9811	11D	47
5310-311-2826	113F	141	5310-477-8775	49	63
5310-316-8956	51		5310-477-8775	49	66
5310-316-8956	52		5310-477-8775	49	79
5310-316-8956	55	56	5310-477-8775	49	82
5310-316-8956	69	8	5310-477-8775	50	29
5310-316-8956	88	15	5310-477-8775	50	33
5310-316-8956	90	12	5310-477-8775	50	36
5310-316-8956	90	17	5310-477-8775	50	39
5310-316-8956	90	8	5310-477-8775	79	140
5310-316-8956	92	2	5310-478-9293	187	36
5310-316-8956	101	112	5310-479-1252	208	20
5310-316-8956	101	28	5310-484-8413	214A	144
5310-322-4642	211	5	5310-485-0758	214A	112
5310-330-8308	114E	58	5310-485-0758	214A	285
5310-330-8308	114E	92	5310-485-9173	212A	185
5310-330-8308	114F	74	5310-487-5605	114A	45
5310-330-8308	114F	92	5310-487-5605	114C	90
5310-332-6879	114P	56	5310-487-5692	114D	12
5310-333-5681	114E	81	5310-487-6715	113E	283
5310-333-5681	114F	97	5310-487-6871	113E	255
5310-333-8123	114E		5310-487-7519	114S	9
5310-333-8123	114F		5310-487-8207	114G	
5310-334-9617	199	11	5310-487-8207	114H	
5310-334-9618	199		5310-487-8207	114J	
5310-334-9618	BULK		5310-487-8215	114G	
5310-334-9619	199		5310-487-8215	114H	
5310-335-5215	19	11	5310-487-8215	114J	
5310-341-9775	96	137	5310-489-5665	162A	24
5310-347-9986	190A	17	5310-497-3782	133	20
5310-363-2949	175F	18	5310-497-3889	78A	
5310-363-2951	175F	17	5310-505-8490	26	16
5310-373-7013	12		5310-508-6866	38	54
5310-373-8799	212A	121	5310-511-9300	214A	215
5310-373-8819	212A	143	5310-511-9331	214A	156
5310-373-8820	212A	144	5310-511-9331	214A	158
5310-373-9408	114G	113	5310-511-9331	214A	532
5310-373-9408	114H	108	5310-511-9331	214A	539
5310-373-9408	114J	93	5310-511-9417	214A	290
5310-373-9412	114E	1	5310-512-5622	113A	68
5310-373-9412	114G	1	5310-512-5622	114R	9
5310-373-9412	114H	2	5310-512-9622	208	76
5310-382-6607	100	42	5310-512-9672	203	14
5310-407-7566	212A	197	5310-512-9696	190A	28
5310-407-9566	194	14	5310-514-8223	178	58
5310-407-9566	195	3	5310-514-8948	213	10
5310-407-9566	162B	3	5310-514-8948	212A	17
5310-439-8851	128A	28	5310-515-7449	169	
5310-441-4349	175A	56	5310-515-7799	212A	138
5310-441-4418	11D	9	5310-515-7844	212A	128
5310-441-4594	11D	21	5310-515-8000	113B	112
5310-441-4594	11D	3	5310-515-8000	113B	17
5310-441-4594	11D	30	5310-515-8000	113B	40
5310-441-4594	11D	50	5310-515-8000	113E	221
5310-441-4594	11D	54	5310-515-8000	113E	247
5310-441-4594	125A	80	5310-515-8000	113E	82
5310-441-4594	125A	90	5310-515-8000	113E	98
5310-441-5473	175A	104	5310-515-8000	114E	113
5310-441-6485	175A	27	5310-515-8000	114E	80
5310-442-0572	212A	76	5310-515-8000	114E	96
5310-442-0572	212A	78	5310-515-8000	114F	53

STOCK NUMBER	FIGURE NUMBER	ITEM NUMBER	STOCK NUMBER	FIGURE NUMBER	ITEM NUMBER
5310-515-8000	114F	65	5310-531-9515	38	45
5310-515-8000	114F	96	5310-531-9515	171	
5310-515-8000	114G		5310-531-9515	BULK	
5310-515-8000	114G	109	5310-533-8452	190A	25
5310-515-8000	114G	122	5310-534-9780	187	3
5310-515-8000	114G	74	5310-543-2410	122	
5310-515-8000	114H	105	5310-543-2410	113F	159
5310-515-8000	114H	74	5310-543-2410	113F	45
5310-515-8000	114J	60	5310-543-2410	128A	119
5310-515-8000	114J	90	5310-543-2410	128A	131
5310-515-8058	12	8	5310-543-2410	128A	135
5310-515-8058	18		5310-543-2410	128A	138
5310-515-8058	24		5310-543-2410	128A	142
5310-515-8058	176		5310-543-2410	128A	148
5310-515-8058	180		5310-543-2410	128A	49
5310-515-8058	79A	22	5310-543-2426	BULK	
5310-515-8058	79B	4	5310-543-4443	24	
5310-515-8058	81A	8	5310-543-4443	26	
5310-515-8058	123B	57	5310-543-4443	41	
5310-515-8058	175A	97	5310-543-4443	43	
5310-515-8058	175D	37	5310-543-4443	55	
5310-515-8058	175D	60	5310-543-4443	56	
5310-515-8706	113F	40	5310-543-4443	56	73
5310-515-8706	113F	73	5310-543-4443	60	
5310-515-8716	BULK		5310-543-4443	62	
5310-515-8716	104A	21	5310-543-4443	65	
5310-515-9371	139		5310-543-4443	66	
5310-515-9698	206	5	5310-543-4443	67	
5310-515-9743	212A		5310-543-4443	70	
5310-515-9744	212A		5310-543-4443	71	
5310-516-2701	175A	34	5310-543-4443	72	
5310-516-2701	175A	61	5310-543-4443	79	
5310-522-0483	BULK		5310-543-4443	79	
5310-523-5607	114A	85	5310-543-4443	80	
5310-523-5607	114C	62	5310-543-4443	80	
5310-523-5607	114L	81	5310-543-4443	80	
5310-524-4333	214A	316	5310-543-4443	80	
			5310-543-4443	80	
			5310-543-4443	81	
			5310-543-4443	81	
			5310-543-4443	81	
			5310-543-4443	81	
			5310-543-4443	82	
			5310-543-4443	84	
5310-526-2402	113E	87	5310-543-4443	87	
5310-527-3648	73		5310-543-4443	91	
5310-527-3648	91		5310-543-4443	93	
5310-527-3796	57		5310-543-4443	97	
5310-527-3821	90A	3	5310-543-4443	97	15
5310-527-4509	96	42	5310-543-4443	105	
5310-527-4509	96	84	5310-543-4443	108	
5310-527-4509	96	88	5310-543-4443	119	
5310-527-4509	106	115	5310-543-4443	125	
5310-527-5062	BULK		5310-543-4443	125	
5310-527-5097	186	7	5310-543-4443	151	
5310-527-5856	114R	11	5310-543-4443	153	
5310-529-7116	188		5310-543-4443	155	
5310-529-8471	39	5	5310-543-4443	156	3
5310-530-4114	186	3	5310-543-4443	157	1
5310-530-4114	78A		5310-543-4443	159	
5310-530-4114	175C	36	5310-543-4443	172	23
5310-530-9121	113F	172	5310-543-4443	172	68
5310-530-9273	113F	20	5310-543-4443	176	
5310-530-9273	113F	29	5310-543-4443	125A	98
5310-530-9362	113A	85	5310-543-4901	116	45
5310-530-9362	114R	66	5310-543-5060	113F	100
5310-530-9541	113F	19	5310-543-5060	113F	110
5310-530-9654	104	22	5310-543-5060	113F	113
5310-530-9654	104	54	5310-543-5060	113F	176
5310-531-0603	125A	30	5310-543-5060	113F	180
5310-531-1510	214A	359	5310-543-5060	113F	212

STOCK NUMBER	FIGURE NUMBER	ITEM NUMBER	STOCK NUMBER	FIGURE NUMBER	ITEM NUMBER
5310-543-5060	113F	218	5310-551-7770	114J	46
5310-543-5060	113F	91	5310-551-7770	114J	5
5310-543-5060	114G	35	5310-551-7770	114J	52
5310-544-2626	188	4	5310-551-7770	114J	63
5310-545-3360	16	59	5310-551-7770	114R	20
5310-545-4617	96	19	5310-551-7770	123B	31
5310-545-4617	96	25	5310-551-7770	128A	110
5310-545-4617	106	44	5310-551-7770	128A	114
5310-545-4617	106	51	5310-551-7770	128A	172
5310-550-0579	19		5310-551-7770	128A	174
5310-550-1920	125A	127	5310-558-4191	125A	13
5310-550-3071	99	9	5310-558-4214	44C	41
5310-550-3092	91	9	5310-558-4848	130	
5310-550-3092	96		5310-558-5278	125A	50
5310-550-5009	41		5310-558-6886	125A	60
5310-550-5009	50	93	5310-558-7115	105	6
5310-550-5009	58		5310-558-7497	16	15
5310-550-5009	65		5310-558-9763	165	31
5310-550-5009	67		5310-559-0892	16	
5310-550-5009	67		5310-559-0892	16	103
5310-550-5009	75		5310-559-1145	105	21
5310-550-5009	87		5310-559-5009	144	
5310-550-5009	106		5310-560-5569	132	
5310-550-5009	106		5310-560-5569	136	
5310-550-5009	108		5310-560-6414	125A	142
5310-550-5009	108		5310-560-9142	21	25
5310-550-5009	132		5310-560-9142	21	54
5310-550-5009	132		5310-564-7712	39	
5310-550-5009	132		5310-567-0256	117	3
5310-550-5009	134		5310-567-0256	118	142
5310-550-5009	134		5310-567-0256	118	42
5310-550-5009	138		5310-567-0256	118	91
5310-550-5009	139		5310-567-0256	119	
5310-550-5009	139		5310-567-5362	38	59
5310-550-5009	139		5310-568-5022	114G	101
5310-550-5009	44C	13	5310-568-5022	114G	53
5310-550-9237	BULK		5310-568-5022	114G	81
5310-550-9237	175E	2	5310-568-5022	114G	91
5310-551-7016	57	10	5310-568-5247	20	
5310-551-7016	BULK		5310-568-5252	18	7
5310-551-7017	BULK		5310-568-5255	18	11
5310-551-7690	98		5310-568-5260	16	39
5310-551-7770	44C	31	5310-568-5262	16	58
5310-551-7770	113B	24	5310-568-9486	21	14
5310-551-7770	113E	214	5310-569-2930	114E	36
5310-551-7770	114E	14	5310-569-2930	114F	32
5310-551-7770	114E	29	5310-573-6417	101	29
5310-551-7770	114E	39	5310-574-0152	20	4
5310-551-7770	114E	42	5310-575-6461	158	69
5310-551-7770	114E	55	5310-576-0546	BULK	
5310-551-7770	114E	83	5310-576-0546	175A	20
5310-551-7770	114F	104	5310-576-0548	131	83
5310-551-7770	114F	35	5310-576-0548	132	126
5310-551-7770	114F	68	5310-576-0548	132	131
5310-551-7770	114F	71	5310-576-0548	175A	103
5310-551-7770	114G	27	5310-576-5752	138	
5310-551-7770	114G	33	5310-576-5752	123A	47
5310-551-7770	114G	45	5310-576-7340	12	15
5310-551-7770	114G	59	5310-579-0228	58	3
5310-551-7770	114G	6	5310-579-1259	19	5
5310-551-7770	114G	65	5310-579-1521	114E	51
5310-551-7770	114G	77	5310-579-1521	114E	75
5310-551-7770	114H	34	5310-579-1521	114E	88
5310-551-7770	114H	39	5310-579-1521	114F	101
5310-551-7770	114H	59	5310-579-1521	114F	87
5310-551-7770	114H	65	5310-579-1521	114H	54
5310-551-7770	114H	7	5310-579-1521	114H	80
5310-551-7770	114H	77	5310-579-1521	114H	91
5310-551-7770	114J	26	5310-579-1521	114H	97
5310-551-7770	114J	31	5310-579-1521	114J	41
5310-551-7770	114J	34	5310-579-1521	114J	66

STOCK NUMBER	FIGURE NUMBER	ITEM NUMBER	STOCK NUMBER	FIGURE NUMBER	ITEM NUMBER
5310-579-1521	114J	76	5310-596-9485	82	11
5310-579-1521	114J	82	5310-596-9485	82	27
5310-579-1786	113E	207	5310-596-9485	82	36
5310-579-1786	123B	13	5310-596-9485	82	53
5310-579-1786	123B	6	5310-596-9485	82	77
			5310-596-9485	151	14
5310-579-5554	112		5310-596-9485	151	20
5310-579-5554	113F	32	5310-596-9485	155	
5310-579-5554	114E	35	5310-596-9503	25	54
5310-579-5554	114F	31	5310-598-9160	178	29
5310-579-5554	128A	127	5310-609-5573	19	12
5310-579-5554	128A	62	5310-616-2289	114F	50
5310-579-5554	128A	75	5310-616-6947	113B	39
5310-579-5554	128A	99	5310-622-1723	BULK	
5310-580-5606	12		5310-623-5985	BULK	
5310-580-5606	13	2	5310-624-5395	212A	127
5310-580-5606	14	2	5310-631-1300	57	
5310-582-6058	15	2	5310-631-1300	131	
5310-582-6058	16		5310-631-1300	132	
5310-582-6058	158	23	5310-631-1302	113A	27
5310-582-6058	214A	553	5310-631-6107	91	
5310-582-6058	214A	559	5310-637-0123	214A	244
5310-582-8458	189	4	5310-637-0215	113E	171
5310-584-5329	178	30	5310-637-0785	19	4
5310-584-7948	BULK		5310-637-1250	16	57
5310-587-3981	20	3	5310-637-1251	16	38
5310-587-3981	20	3	5310-637-1260	27	2
5310-595-6057	BULK		5310-637-1261	24	18
5310-595-6070	114E		5310-637-2476	114B	4
5310-595-6070	114F		5310-637-2476	114D	4
5310-595-6070	114G		5310-637-8111	178	28
5310-595-6070	114H		5310-637-8371	20	
5310-595-6070	114J		5310-637-9541	11D	42
5310-595-6607	BULK		5310-637-9541	11D	46
5310-595-7078	91		5310-637-9541	175D	50
5310-595-7078	BULK		5310-637-9541	212A	206
5310-595-7079	16		5310-638-0546	123B	20
5310-595-7079	16		5310-638-1126	88	35
5310-595-7079	16		5310-638-1148	93	2
5310-595-7079	16	25	5310-638-1895	114P	33
5310-595-7079	16	29	5310-638-1895	114Q	19
5310-595-7079	16	75	5310-638-2605	103	2
5310-595-7079	16	81	5310-638-2605	148	
5310-595-7079	16	85	5310-638-5730	36	29
5310-595-7473	84	34	5310-638-6589	199	1
5310-595-9726	28	28	5310-638-9469	137	39
5310-595-9962	210	25	5310-638-9630	160	3
5310-595-9962	210	4	5310-638-9630	160	5
5310-596-0013	123B	45	5310-638-9783	114E	15
5310-596-0335	181A	18	5310-639-1954	158	70
5310-596-0379	83A	8	5310-639-2583	114E	100
5310-596-0603	114B	12	5310-639-2583	114F	44
5310-596-1766	17		5310-639-2596	25	36
5310-596-1766	91		5310-639-3595	156	15
5310-596-1766	99		5310-639-3595	157	10
5310-596-4963	113E	230	5310-639-3595	157	33
5310-596-4963	113E	238	5310-639-3595	158	55
5310-596-4963	113E	243	5310-639-3844	20	
5310-596-6095	206		5310-639-4009	12	
5310-596-6638	165	43	5310-639-6711	212A	130
			5310-639-8747	16	
5310-596-7173	150		5310-641-9141	186	3
5310-596-7173	212A	205	5310-641-9916	78A	21
5310-596-7582	190A	20	5310-653-0182	115	52
5310-596-8061	83	21	5310-656-0094	145	33
5310-596-8422	108	43	5310-656-0094	145	43
5310-596-8422	214A	241	5310-656-0094	146	38
5310-596-8794	207	2	5310-656-0094	162	24
5310-596-8794	214	3	5310-656-0094	167	16
5310-596-8837	91	34	5310-656-0094	181	5
5310-596-8838	28	7	5310-660-2891	113A	61

STOCK NUMBER	FIGURE NUMBER	ITEM NUMBER	STOCK NUMBER	FIGURE NUMBER	ITEM NUMBER
5310-660-2891	114R	47	5310-728-5503	BULK	
5310-660-2896	83A	2	5310-728-5510	49	12
5310-660-3381	32	173	5310-728-5510	49	6
5310-660-3381	43		5310-728-5510	50	215
5310-660-3381	87		5310-728-5510	50	277
5310-660-3381	91		5310-728-5510	50	280
5310-660-3381	93		5310-728-5510	50	310
5310-660-3381	105		5310-728-5510	74	37
5310-660-3381	112	34	5310-728-5510	75	50
5310-660-3381	116		5310-728-5510	76	52
5310-660-3381	116		5310-728-5510	132	98
5310-660-3381	119		5310-728-5510	145	11
5310-660-3381	122		5310-728-5510	BULK	
5310-660-3381	163		5310-728-5519	BULK	
5310-660-3381	165		5310-728-5520	BULK	
5310-660-3381	165		5310-728-7708	51	9
5310-660-3381	207	19	5310-728-7708	52	38
5310-660-3381	208	2	5310-728-7708	BULK	
5310-660-3381	208	9	5310-728-7711	74	32
5310-674-0351	12	13	5310-728-7711	75	45
5310-678-8588	114L	41	5310-728-7711	BULK	
5310-680-7296	115		5310-735-0196	28	30
5310-682-5877	30	11	5310-735-0196	29	9
5310-682-5877	30	17	5310-735-0196	30	15
5310-682-5877	30	19	5310-735-0196	30	23
5310-682-5877	30	21	5310-738-6885	175E	37
5310-682-5877	79	101	5310-753-4151	12	
5310-682-5877	79	108	5310-753-4151	16	33A
5310-682-5877	79	119	5310-753-4151	19	15
5310-682-5877	79	126	5310-753-4394	38	16
5310-682-5877	79	183	5310-753-4394	38	8
5310-682-5877	79	185	5310-754-1834	84A	21
5310-682-5877	79	187	5310-754-1834	84B	23
5310-682-5877	79	189	5310-754-1834	162A	16
5310-682-5877	79	54	5310-754-1834	162A	22
5310-682-5877	79	92			
5310-682-5877	80	128	5310-754-3376	162	52
5310-682-5877	81	113	5310-754-4606	113E	15
5310-682-5877	157		5310-754-4606	113E	5
5310-682-5877	178	69	5310-754-4606	113E	92
5310-685-1498	114D		5310-764-7272	43	
5310-685-3744	41		5310-766-3566	19	3
5310-685-3744	115		5310-768-3862	93	13
5310-685-3744	172		5310-768-3862	93	18
5310-685-6845	BULK		5310-768-3862	93	27
5310-687-6293	BULK		5310-768-3862	93	38
5310-688-0137	113F	160	5310-768-3862	101	36
5310-688-1370	113E	205	5310-768-3862	102	24
5310-688-1370	113E	233	5310-768-3862	153	22
5310-688-1370	113E	250	5310-771-7348	BULK	
5310-693-6979	12		5310-776-7487	175A	11
5310-698-5437	26		5310-777-5793	154	163
5310-698-5440	23	12	5310-781-2804	41	
5310-698-5441	24		5310-781-2804	132	101
			5310-781-2804	139	
			5310-782-1349	96	51
5310-709-8578	212A	14	5310-793-6832	181A	23
5310-720-8106	113E	173	5310-798-9085	128A	179
5310-720-8392	114E	82	5310-798-9086	128A	146
5310-720-8392	114F	103	5310-798-9086	128A	47
5310-720-8392	114F	99	5310-798-9088	128A	178
5310-720-8392	114G	76	5310-799-6288	128A	50
5310-720-8392	114H	76	5310-804-0075	BULK	
5310-720-8392	114J	62	5310-804-4235	BULK	
5310-720-8528	132	125	5310-805-3214	113E	168
5310-720-8528	132	128	5310-805-3214	113E	60
5310-720-8528	132	130	5310-806-1831	16	
5310-720-8528	132	133	5310-806-1831	122	
5310-726-1802	46		5310-806-1831	123	
5310-726-9067	BULK		5310-806-1831	162	
5310-728-3469	79	181	5310-806-1831	162	

STOCK NUMBER	FIGURE NUMBER	ITEM NUMBER	STOCK NUMBER	FIGURE NUMBER	ITEM NUMBER
5310-806-1831	163		5310-811-3494	115	
5310-807-1466	41		5310-811-3494	115	
5310-807-1466	45		5310-811-3494	118	
5310-807-1466	48		5310-811-3494	122	
5310-807-1466	57		5310-811-3494	130	
5310-807-1466	58		5310-811-3494	131	
5310-807-1466	70		5310-811-3494	132	
5310-807-1466	77		5310-811-3494	133	
5310-807-1466	102		5310-811-3494	140	
5310-807-1466	123		5310-811-3494	146	
5310-807-1466	138		5310-811-3494	153	
5310-807-1466	139		5310-811-3494	154	
5310-807-1466	123B	39	5310-811-3494	192	25
5310-807-1467	43		5310-811-3494	193	24
5310-807-1467	50		5310-811-3494	175D	59
5310-807-1467	57		5310-811-7706	87	59
5310-807-1467	59		5310-812-3373	123B	5
5310-807-1467	61		5310-816-6981	114C	
5310-807-1467	62		5310-816-6984	114C	32
5310-807-1467	70		5310-816-6985	114C	
5310-807-1467	71		5310-818-6457	BULK	
5310-807-1467	72		5310-819-0519	181A	29
5310-807-1467	73		5310-822-4892	96	32
5310-807-1467	79		5310-822-4892	106	7
5310-807-1467	81		5310-824-4908	183	
5310-807-1467	83		5310-847-1075	212A	
5310-807-1467	84		5310-856-4143	188	
5310-807-1467	88		5310-856-4144	188	
5310-807-1467	91		5310-857-4948	75	
5310-807-1467	95		5310-857-4948	207	1
5310-807-1467	97		5310-857-4957	84	
5310-807-1467	101		5310-857-4957	132	
5310-807-1467	105		5310-857-4957	85B	36
5310-807-1467	119		5310-857-4958	214A	44
5310-807-1467	119	12	5310-857-4958	214A	47
5310-807-1467	119	13	5310-857-4959	200	2
5310-807-1467	132		5310-857-4960	19	1
5310-807-1467	137		5310-857-4960	41	
5310-807-1467	138		5310-857-4960	48	
5310-807-1467	138		5310-857-4960	214A	384
5310-807-1467	139		5310-857-4960	214A	386
5310-807-1467	170		5310-857-4960	214A	50
5310-807-1467	170		5310-857-4960	214A	54
5310-807-1467	172		5310-857-4960	214A	56
5310-807-1467	173		5310-857-4960	214A	58
5310-807-1467	173		5310-857-4960	214A	60
5310-807-1467	79A	26	5310-857-5547	50	
5310-807-1467	79B	5	5310-857-5547	130	
5310-807-1467	81A	11	5310-857-5547	130	
5310-807-1467	123A	46	5310-857-5548	58	
5310-807-1467	125A	95	5310-857-5548	109	
5310-807-1467	175A	38	5310-857-5548	113	
5310-807-1468	79		5310-857-5548	114	
5310-807-1468	178	32	5310-857-5557	169	
5310-807-1468	178	60	5310-857-5557	169	38
5310-807-1468	BULK		5310-857-5559	BULK	
5310-811-2483	41	100	5310-857-5562	BULK	
5310-811-3494	12				
5310-811-3494	41		5310-857-5976	176	
5310-811-3494	42		5310-858-7707	114T	39
5310-811-3494	46		5310-862-2792	114B	81
5310-811-3494	50		5310-862-4871	114B	61
5310-811-3494	75		5310-862-4871	114D	67
5310-811-3494	94		5310-862-4882	114G	112
5310-811-3494	94		5310-862-4882	114G	43
5310-811-3494	94	6	5310-862-4882	114H	47
5310-811-3494	100		5310-862-4882	114J	37
5310-811-3494	101		5310-863-1170	188	
5310-811-3494	104		5310-863-7959	114J	2
5310-811-3494	108		5310-863-7961	114G	47
5310-811-3494	110	58	5310-863-7961	114H	48

STOCK NUMBER	FIGURE NUMBER	ITEM NUMBER	STOCK NUMBER	FIGURE NUMBER	ITEM NUMBER
5310-863-7961	114J	35	5310-877-5796	117	
5310-871-3470	114G	41	5310-877-5796	117	
5310-871-3470	114H	44	5310-877-5796	117	
5310-877-5795	176	40	5310-877-5796	117	
5310-877-5795	84A	1	5310-877-5796	117	5
5310-877-5795	84B	5	5310-877-5796	118	
5310-877-5795	123B	19	5310-877-5796	118	
5310-877-5796	11		5310-877-5796	118	
5310-877-5796	12		5310-877-5796	118	
5310-877-5796	17	24	5310-877-5796	118	144
5310-877-5796	21	42A	5310-877-5796	118	44
5310-877-5796	27	4	5310-877-5796	118	93
5310-877-5796	32		5310-877-5796	120	
5310-877-5796	35		5310-877-5796	125	
5310-877-5796	36	8	5310-877-5796	152	
5310-877-5796	37		5310-877-5796	153	
5310-877-5796	38		5310-877-5796	155	
5310-877-5796	41		5310-877-5796	156	
5310-877-5796	43	74A	5310-877-5796	156	18
5310-877-5796	46		5310-877-5796	158	
5310-877-5796	51		5310-877-5796	158	40
5310-877-5796	52		5310-877-5796	158	7
5310-877-5796	55	61	5310-877-5796	165	
5310-877-5796	56		5310-877-5796	165	
5310-877-5796	59		5310-877-5796	174	
5310-877-5796	61		5310-877-5796	175	
5310-877-5796	64		5310-877-5796	176	
5310-877-5796	69		5310-877-5796	179	22
5310-877-5796	74		5310-877-5796	175D	18
5310-877-5796	74		5310-877-5797	11	
5310-877-5796	75		5310-877-5797	11	
5310-877-5796	75		5310-877-5797	11	
5310-877-5796	78		5310-877-5797	11	
5310-877-5796	79		5310-877-5797	25	17
5310-877-5796	82		5310-877-5797	25	2
5310-877-5796	84		5310-877-5797	25	4
5310-877-5796	85		5310-877-5797	32	
5310-877-5796	87		5310-877-5797	33	
5310-877-5796	87	149	5310-877-5797	33	
5310-877-5796	87	162	5310-877-5797	33	
5310-877-5796	87	166	5310-877-5797	34	
5310-877-5796	87	170	5310-877-5797	35	
5310-877-5796	88		5310-877-5797	39	
5310-877-5796	89		5310-877-5797	41	
5310-877-5796	96		5310-877-5797	41	
5310-877-5796	96		5310-877-5797	41	
5310-877-5796	98		5310-877-5797	42	
5310-877-5796	99		5310-877-5797	44	
5310-877-5796	101		5310-877-5797	45	
5310-877-5796	101		5310-877-5797	46	
5310-877-5796	101		5310-877-5797	48	
5310-877-5796	102		5310-877-5797	50	
5310-877-5796	104		5310-877-5797	50	
5310-877-5796	104		5310-877-5797	50	
5310-877-5796	104		5310-877-5797	50	34
5310-877-5796	104		5310-877-5797	51	
5310-877-5796	105		5310-877-5797	52	
5310-877-5796	107		5310-877-5797	52	
5310-877-5796	108		5310-877-5797	53	
5310-877-5796	115		5310-877-5797	54	
5310-877-5796	116		5310-877-5797	54	
5310-877-5796	116		5310-877-5797	56	
5310-877-5796	116		5310-877-5797	60	
5310-877-5796	116		5310-877-5797	63	
5310-877-5796	117		5310-877-5797	64	
5310-877-5796	117		5310-877-5797	67	
5310-877-5796	117		5310-877-5797	67	
5310-877-5796	117		5310-877-5797	67	
5310-877-5796	117		5310-877-5797	69	
5310-877-5796	117		5310-877-5797	73	
5310-877-5796	117		5310-877-5797	74	

STOCK NUMBER	FIGURE NUMBER	ITEM NUMBER	STOCK NUMBER	FIGURE NUMBER	ITEM NUMBER
5310-877-5797	75		5310-877-5797	215	4
5310-877-5797	75		5310-877-5797	125A	144
5310-877-5797	75		5310-877-5797	175D	45
5310-877-5797	77		5310-877-5797	175E	6
5310-877-5797	78		5310-877-5798	41	
5310-877-5797	82		5310-877-5798	46	
5310-877-5797	85		5310-877-5798	48	
5310-877-5797	87		5310-877-5798	50	
5310-877-5797	88		5310-877-5798	52	
5310-877-5797	89		5310-877-5798	56	
5310-877-5797	90		5310-877-5798	82	
5310-877-5797	96		5310-877-5798	85	
5310-877-5797	100		5310-877-5798	109	
5310-877-5797	101		5310-877-5798	115	
5310-877-5797	102		5310-877-5798	118	
5310-877-5797	104		5310-877-5798	120	
5310-877-5797	106		5310-877-5798	120	
5310-877-5797	106		5310-877-5798	120	
5310-877-5797	106		5310-877-5798	132	
5310-877-5797	107		5310-877-5798	132	
5310-877-5797	108		5310-877-5798	132	
5310-877-5797	115		5310-877-5798	150	
5310-877-5797	116		5310-877-5798	172	
5310-877-5797	116		5310-877-5798	172	
5310-877-5797	117		5310-877-5798	179	
5310-877-5797	117		5310-877-5798	180	
5310-877-5797	117		5310-877-5798	BULK	
5310-877-5797	118		5310-877-5798	214A	180
5310-877-5797	118		5310-877-5798	214A	207
5310-877-5797	118		5310-877-5798	214A	236
5310-877-5797	118		5310-877-5798	214A	380
5310-877-5797	120		5310-877-5798	214A	382
5310-877-5797	122		5310-877-5798	214A	40
5310-877-5797	122		5310-888-7356	188	
5310-877-5797	122		5310-903-8282	193	2
5310-877-5797	123		5310-903-8282	208	12
5310-877-5797	123		5310-903-8282	208	31
5310-877-5797	123		5310-903-8282	208	37
5310-877-5797	123		5310-903-8282	211	1
5310-877-5797	124		5310-903-8282	190A	32
5310-877-5797	124		5310-903-8282	214A	
5310-877-5797	124		5310-904-8809	79A	
5310-877-5797	125		5310-905-3081	70	
5310-877-5797	130		5310-905-3081	87	
5310-877-5797	138		5310-905-3081	119	
5310-877-5797	140		5310-905-3081	119	
5310-877-5797	144		5310-905-3081	132	
5310-877-5797	145		5310-905-3081	132	
5310-877-5797	147		5310-905-3081	136	
5310-877-5797	148		5310-905-3081	136	
5310-877-5797	149		5310-905-3081	136	
5310-877-5797	150		5310-905-3081	138	
5310-877-5797	152		5310-905-3081	139	
5310-877-5797	154		5310-905-8434	138	
5310-877-5797	154		5310-905-8451	77	
5310-877-5797	154		5310-905-8451	95	
5310-877-5797	158		5310-905-8451	96	
5310-877-5797	160		5310-905-8451	96	11
5310-877-5797	162		5310-905-8451	106	
5310-877-5797	165		5310-905-8451	106	6
5310-877-5797	167		5310-905-8451	118	
5310-877-5797	169		5310-905-8451	118	
5310-877-5797	170		5310-905-8451	136	
5310-877-5797	176		5310-905-8451	79B	9
5310-877-5797	176		5310-922-9081	112	44
5310-877-5797	178		5310-922-9081	119	
5310-877-5797	180		5310-939-0783	17	19
5310-877-5797	181		5310-939-0783	BULK	
5310-877-5797	182		5310-941-6440	138	
5310-877-5797	182		5310-941-6440	138	
5310-877-5797	210	31	5310-941-6440	139	

STOCK NUMBER	FIGURE NUMBER	ITEM NUMBER	STOCK NUMBER	FIGURE NUMBER	ITEM NUMBER
5310-941-6440	154		5315-081-7023	45	
5310-941-6440	180		5315-081-7023	BULK	
5310-947-9865	113F	168	5315-081-7026	69	6
5310-947-9867	113F	24	5315-081-7875	172	2
5310-948-3238	113F	190	5315-081-7875	172	40
5310-950-0039	23	22A	5315-081-7875	172	65
5310-950-0039	25		5315-088-6272	206	26
5310-950-0039	26	8A	5315-095-9664	114S	52
5310-950-0039	36	19	5315-096-1433	113E	55
5310-950-0039	98		5315-141-6268	205	
5310-950-0039	99		5315-141-6356	56	27
5310-950-0039	172		5315-141-6356	60	5
5310-950-0039	175		5315-141-6356	67	17
5310-950-0039	176		5315-148-0792	202A	
5310-950-0039	179		5315-148-0793	202A	
5310-950-0039	206	55	5315-148-0794	202A	18
5310-950-0039	206	64	5315-148-0795	184	
5310-950-0039	214	2	5315-148-0795	199	
5310-950-0039	162B	7	5315-148-0795	206	
5310-950-1310	101		5315-148-0795	207	
5310-950-1310	113B	25	5315-148-0795	208	
5310-950-3180	183A		5315-148-0817	188	
5310-950-3184	106	88	5315-148-8941	190	24
5310-950-3184	106	98	5315-148-8948	184	32
5310-952-1872	BULK		5315-148-8949	205	
5310-961-8433	43	74B	5315-148-8950	184	
5310-982-4908	183		5315-148-8950	199	
5310-982-4988	39		5315-148-8950	206	
5310-982-4988	171		5315-148-8950	207	
5310-982-4988	171		5315-148-8950	208	
5310-982-5064	BULK		5315-148-8957	186	
5310-982-6808	24		5315-148-8957	187	
5310-984-2309	184	24	5315-148-8958	186	
5310-984-2310	184		5315-148-8958	187	
5310-984-2773	184		5315-148-8960	186	
5310-984-7042	BULK		5315-149-0115	190A	40
5310-985-0765	162		5315-149-4282	214A	280
5310-988-5329	BULK		5315-151-7757	214A	
5310-990-4232	114E	6	5315-151-7758	214A	
5310-990-5680	128A	132	5315-152-2658	206	
5315-017-9252	175A		5315-181-6314	114A	32
5315-021-9090	78A	8	5315-181-6314	114C	8
5315-034-4991	188	44	5315-181-6314	114L	28
5315-038-0342	114A	65	5315-181-6346	114S	116
5315-038-0342	114C	77	5315-187-9370	BULK	
5315-038-0342	114L	66	5315-198-6112	187	23
5315-048-8056	205	25	5315-198-6112	187	28
5315-058-9698	57	28	5315-198-8091	70	11
5315-058-9698	58	12	5315-198-8093	57	34
5315-058-9698	96	44	5315-198-8093	71	7
5315-058-9698	106	71	5315-198-8093	71	9
5315-058-9756	39	14	5315-198-8093	72	2
5315-060-2409	214A	141	5315-198-8097	97	30
5315-062-7251	BULK		5315-198-8100	107	15
5315-064-2701	87	53	5315-198-8100	107	18
5315-064-2701	BULK		5315-198-8112	101	32
5315-078-7712	29	5	5315-198-8112	101	38
5315-078-7712	30	3	5315-198-8114	73	10
5315-080-0170	43	25	5315-198-8114	73	8
5315-080-0170	43	6	5315-200-2282	104	
5315-080-0170	43	8	5315-200-2284	158	16
5315-080-0170	45	15	5315-200-2285	158	30
5315-080-0170	87	54	5315-200-6477	175A	17
5315-080-0170	87	58	5315-200-6935	113E	
5315-080-0171	61	11	5315-205-0027	206	
5315-080-0488	41	68	5315-205-0029	206	
5315-080-1936	BULK		5315-205-0032	188	
5315-080-1942	105	48	5315-205-0049	202A	
5315-080-1942	108	3	5315-212-8687	214A	
5315-080-1943	105	49	5315-217-0707	113A	20
5315-080-8948	206		5315-223-6184	113A	14

STOCK NUMBER	FIGURE NUMBER	ITEM NUMBER	STOCK NUMBER	FIGURE NUMBER	ITEM NUMBER
5315-223-6184	113A	66	5315-234-1856	101	
5315-224-9423	87	7	5315-234-1856	102	
5315-224-9424	170	16	5315-234-1856	103	
5315-224-9424	170	19	5315-234-1856	104	
5315-225-5173	113B	51	5315-234-1856	105	
5315-233-2451	175F	12	5315-234-1856	105	7
5315-234-1851	69		5315-234-1856	105	8
5315-234-1851	96	49	5315-234-1856	107	
5315-234-1851	159		5315-234-1856	107	
5315-234-1851	172		5315-234-1856	108	
5315-234-1851	172		5315-234-1856	117	95
5315-234-1851	172		5315-234-1856	122	
5315-234-1851	172		5315-234-1856	122	
5315-234-1851	172		5315-234-1856	122	
5315-234-1851	172		5315-234-1856	122	
5315-234-1856	12		5315-234-1856	122	
5315-234-1856	15		5315-234-1856	140	
5315-234-1856	21		5315-234-1856	141	
5315-234-1856	26		5315-234-1856	150	
5315-234-1856	38		5315-234-1856	152	
5315-234-1856	39		5315-234-1856	152	
5315-234-1856	41		5315-234-1856	152	
5315-234-1856	41		5315-234-1856	153	
5315-234-1856	41	132	5315-234-1856	157	9
5315-234-1856	42		5315-234-1856	158	
5315-234-1856	42		5315-234-1856	158	
5315-234-1856	42		5315-234-1856	158	45
5315-234-1856	43		5315-234-1856	159	
5315-234-1856	45		5315-234-1856	160	
5315-234-1856	45		5315-234-1856	162	
5315-234-1856	46	67	5315-234-1856	169	
5315-234-1856	47		5315-234-1856	169	
5315-234-1856	54	52	5315-234-1856	169	
5315-234-1856	54	56	5315-234-1856	169	
5315-234-1856	55	21	5315-234-1856	169	20B
5315-234-1856	55	27	5315-234-1856	170	11
5315-234-1856	55	33	5315-234-1856	173	
5315-234-1856	55	40	5315-234-1856	187	1
5315-234-1856	55	46	5315-234-1856	190	2
5315-234-1856	55	78	5315-234-1856	200	
5315-234-1856	55	84	5315-234-1856	205	12
5315-234-1856	56		5315-234-1856	35A	26
5315-234-1856	56	51	5315-234-1856	85B	26
5315-234-1856	59		5315-234-1856	125A	15
5315-234-1856	61		5315-234-1856	125A	29
5315-234-1856	65	5	5315-234-1856	175A	2
5315-234-1856	67		5315-234-1856	175A	26
5315-234-1856	68		5315-234-1856	175A	60
5315-234-1856	72		5315-234-1856	175D	4
5315-234-1856	87		5315-234-1856	202A	14
5315-234-1856	87		5315-234-1856	212A	195
5315-234-1856	87		5315-234-1856	214A	22
5315-234-1856	87		5315-234-1856	214A	226
5315-234-1856	87		5315-234-1856	214A	260
5315-234-1856	87		5315-234-1856	214A	297
5315-234-1856	87		5315-234-1856	214A	32
5315-234-1856	87		5315-234-1856	214A	444
5315-234-1856	87		5315-234-1856	214A	514
5315-234-1856	88		5315-234-1860	BULK	
5315-234-1856	88		5315-234-1861	BULK	
5315-234-1856	88	1	5315-234-1864	12	
5315-234-1856	90	10	5315-234-1864	12	11
5315-234-1856	90	13	5315-234-1864	13	
5315-234-1856	90	18	5315-234-1864	14	
5315-234-1856	90	21	5315-234-1864	15	
5315-234-1856	90	6	5315-234-1864	16	
5315-234-1856	91		5315-234-1864	19	14
5315-234-1856	91		5315-234-1864	21	23
5315-234-1856	93		5315-234-1864	21	52
5315-234-1856	93	1	5315-234-1864	24	17
5315-234-1856	96		5315-234-1864	25	35

STOCK NUMBER	FIGURE NUMBER	ITEM NUMBER	STOCK NUMBER	FIGURE NUMBER	ITEM NUMBER
5315-234-1864	27	1	5315-298-1031	BULK	
5315-234-1864	38	27	5315-298-1035	55	67
5315-234-1864	39	8	5315-298-1035	55	69
5315-234-1864	45		5315-298-1035	62	21
5315-234-1864	107		5315-298-1035	62	23
5315-234-1864	150		5315-298-3641	94	15
5315-234-1864	151	23	5315-307-3608	16	
5315-234-1864	156	14	5315-308-0158	12	
5315-234-1864	157	32	5315-308-2506	114E	108
5315-234-1864	158		5315-308-2506	114F	47
5315-234-1864	158	54	5315-313-0570	12	32
5315-234-1864	162		5315-320-2127	188	
5315-234-1864	187	20	5315-328-5174	178	47
5315-234-1864	187	35	5315-328-5885	E11	4
5315-234-1864	189	2	5315-329-0378	113E	77
5315-234-1864	203	1	5315-332-6559	16	
5315-234-1864	204	12	5315-333-6839	25	23
5315-234-1864	204	6	5315-333-6839	29	2
5315-234-1864	205	4	5315-349-1849	95	9
5315-234-1864	208	75	5315-350-7274	214A	302
5315-234-1864	125A	126	5315-373-6989	12	
5315-234-1864	175D	63	5315-441-4688	175A	92
5315-234-1864	212A	204	5315-442-2677	214A	279
5315-234-1864	214A	552	5315-442-3838	214A	272
5315-234-1864	214A	558	5315-442-5106	214A	312
5315-234-7465	158	92	5315-443-5115	113E	264
5315-236-8356	88	34	5315-484-7672	214A	105
5315-236-8359	118		5315-484-7673	214A	
5315-236-8359	188	6	5315-484-7861	214A	555
5315-236-8359	BULK		5315-484-7861	214A	562
5315-236-8359	190A	1	5315-484-7862	214A	
5315-236-8365	BULK		5315-484-7927	214A	169
5315-236-8370	BULK		5315-486-2601	175E	45
5315-236-8371	BULK		5315-486-2605	175E	40
5315-241-2917	206	66	5315-511-3324	114T	77
5315-241-2920	186	12	5315-514-0446	65	4
5315-241-2920	187	13	5315-514-1050	114T	16
5315-241-2921	184	43	5315-514-1434	114A	62
5315-241-2921	199	7	5315-514-1434	114A	89
5315-241-2921	206	31	5315-514-1434	114B	44
5315-241-2921	206	32	5315-514-1434	114C	
5315-241-2921	206	33	5315-514-1434	114C	75
5315-241-2921	206	34	5315-514-1434	114D	50
5315-241-2921	207	25	5315-514-1434	114L	58
5315-241-2921	208	34	5315-514-1434	114L	62
5315-241-2921	208	67	5315-514-2190	114C	69
5315-241-2929	200	20	5315-514-2190	114D	
5315-245-1254	38	49	5315-515-2950	208	43
5315-265-9890	93	20	5315-525-5808	114L	59
5315-265-9890	93	40	5315-527-0159	114A	75
5315-265-9899	BULK		5315-527-0159	114B	52
5315-276-0092	188	32	5315-527-0159	114B	72
5315-281-7692	BULK		5315-527-0159	114D	59
5315-282-0296	101	116	5315-527-0159	114D	80
5315-282-1196	175G	51	5315-527-0164	113F	143
5315-282-1520	205		5315-527-2521	165	51
5315-282-6792	190A	8	5315-531-7730	113E	70
5315-282-6867	184		5315-531-9019	113E	270
5315-282-6867	199		5315-537-1301	BULK	
5315-282-6867	206		5315-537-1301	114A	40
5315-282-6867	207		5315-537-1301	114C	95
5315-282-6867	208		5315-537-1301	114L	51
5315-282-7245	190A		5315-545-5628	114G	124
5315-285-7161	BULK		5315-545-5628	114H	116
5315-286-8636	113A	31	5315-550-8704	87	33
5315-290-5265	24	7	5315-559-5659	49	86
5315-290-9168	97	18	5315-559-7467	17	25
5315-291-2161	38	44	5315-559-8496	206	
5315-291-2724	181A	72	5315-560-5395	169	
5315-297-3454	178	65	5315-565-8496	116	32
5315-297-7863	94	14	5315-567-9111	198	18

STOCK NUMBER	FIGURE NUMBER	ITEM NUMBER	STOCK NUMBER	FIGURE NUMBER	ITEM NUMBER
5315-570-5371	113E	23	5315-687-5218	BULK	
5315-576-5518	95	5	5315-687-5218	212A	139
5315-582-2466	17		5315-687-9702	125A	34
5315-582-2466	103		5315-691-0032	125A	87
5315-582-3493	26	34	5315-702-9650	BULK	
			5315-720-8832	175A	114
5315-584-9746	175C	44	5315-740-6711	BULK	
5315-597-0643	66	10	5315-753-3896	BULK	
5315-597-1519	56	28	5315-805-5798	BULK	
5315-597-1520	101	106	5315-810-4513	12	22
5315-597-1520	101	117	5315-811-1232	39	18
5315-597-1520	101	53	5315-811-1241	150	40
5315-597-1520	101	56	5315-811-1245	BULK	
5315-597-1520	101	68	5315-811-1265	140	11
5315-597-1520	101	75	5315-811-1265	141	15
5315-597-1520	101	91	5315-811-1266	108	18
5315-597-1520	101	94	5315-811-1266	108	19
5315-597-1520	152	17	5315-811-1266	108	2
5315-597-1520	152	24	5315-811-1266	108	20
5315-597-1562	66	9	5315-811-1266	108	26
5315-597-1562	152	2	5315-811-1266	108	27
5315-597-1562	152	3	5315-811-1272	65	6
5315-597-1562	152	4	5315-811-3791	BULK	
5315-597-1600	56	29	5315-812-1236	15	5
5315-597-1600	66	2	5315-812-3424	BULK	
5315-597-1642	66	1	5315-812-3757	152	5
5315-597-2415	101	115	5315-812-3757	153	1
5315-597-5084	188		5315-812-3759	140	9
5315-597-6665	114L	75	5315-812-3759	141	13
5315-598-3035	56	105	5315-812-3764	117	94
5315-598-3035	56	23	5315-812-3765	35A	24
5315-598-4703	60	6	5315-812-3775	BULK	
5315-598-4704	56	104	5315-822-5732	189	6
5315-603-4573	113F	186	5315-823-8682	175D	66
5315-605-2977	BULK		5315-823-8740	106	128
5315-608-0705	12	1	5315-823-8740	106	62
5315-613-5341	175F	35	5315-823-8747	45	10
5315-614-0311	54	54	5315-823-8754	BULK	
5315-616-5514	83	24	5315-823-8754	175A	51
5315-616-5514	84	29	5315-826-3251	25	59
5315-616-5516	107	91	5315-826-3251	43	15
5315-616-5727	214A	161	5315-826-3251	47	10
5315-616-5727	214A	417	5315-826-3251	47	7
5315-619-2959	214A		5315-826-3251	58	16
5315-619-2960	214A		5315-828-5486	BULK	
5315-619-2961	214A	291	5315-828-5486	214A	121
5315-619-3048	167		5315-839-5822	BULK	
5315-619-3594	208	51	5315-841-4443	12	29
5315-633-6991	152	8	5315-841-4443	BULK	
5315-633-6991	165	61	5315-844-5644	90A	28
5315-658-5750	16	16	5315-844-9710	BULK	
5315-663-0597	184		5315-850-4664	214A	165
5315-663-1298	54	65	5315-850-4664	214A	343
5315-663-2598	200	51	5315-850-4664	214A	585
5315-663-2598	208		5315-852-9234	188	
5315-663-2626	194	10	5315-857-1653	186	
5315-664-0401	84	36	5315-857-1653	187	
5315-664-1002	BULK		5315-864-5550	114L	38
5315-664-7206	11	38	5315-864-5888	114L	39
5315-664-7208	178	36	5315-877-7542	184	
5315-664-8575	179	16	5315-877-8914	184	37
5315-664-9459	29		5315-877-8915	184	
5315-664-9459	30		5315-881-2253	43	21
5315-664-9535	19	7	5315-882-1438	43	10
5315-674-5506	141	18	5315-882-1438	125A	81
5315-678-1496	114L	40	5315-888-7384	113E	94
5315-678-1507	113E	129	5315-890-0048	113E	31
5315-682-1460	85B	11	5315-899-4116	162	41
5315-682-1460	BULK		5315-899-4116	BULK	
5315-682-2056	25		5315-901-5681	113A	18
5315-687-5020	202A	4	5315-901-5681	113A	43

STOCK NUMBER	FIGURE NUMBER	ITEM NUMBER	STOCK NUMBER	FIGURE NUMBER	ITEM NUMBER
5315-901-5681	114R	12	5320-118-1995	BULK	
5315-901-5681	114R	29	5320-118-1996	BULK	
5315-901-5681	114R	7	5320-118-1997	BULK	
5315-905-8741	114F	60	5320-118-1998	BULK	
5315-909-3824	113F	101	5320-118-2005	BULK	
5315-911-9994	113F	106	5320-118-2006	BULK	
5315-913-2348	113E		5320-118-2007	BULK	
5315-913-2348	113E	217	5320-118-2016	BULK	
5315-936-2432	113F	252	5320-119-5548	50	20
5315-947-3240	113F	105	5320-119-5548	160	28
5315-947-3248	200		5320-119-5549	160	
5315-947-6257	113F	55	5320-119-5549	BULK	
5315-951-2395	47	2	5320-119-5550	BULK	
5315-951-2395	108	37	5320-119-6773	154	
5315-954-6841	48		5320-119-6819	154	164
5315-954-6841	48	20	5320-119-6825	BULK	
5315-955-1343	113E	291	5320-119-6862	113C	42
5315-957-6696	106	12	5320-147-1645	BULK	
5315-957-9416	41	67	5320-147-1646	45	56
5315-960-0007	123	16	5320-147-1647	BULK	
5315-969-6623	BULK		5320-147-1649	45	58
5315-973-2789	50	394	5320-165-8716	154	
5315-988-7660	105	47	5320-165-8755	BULK	
5315-989-7631	39	10	5320-165-8768	BULK	
5315-989-7631	108	1	5320-165-8775	BULK	
5315-989-7631	152	10	5320-165-8779	BULK	
5315-989-7631	172	25	5320-165-8785	BULK	
5315-989-7631	172	31	5320-165-8789	BULK	
5315-989-7631	172	70	5320-165-8810	BULK	
5315-989-7631	172	76	5320-165-8815	BULK	
5315-990-1338	152	7	5320-165-8817	154	
5315-990-1338	173	41	5320-165-8817	BULK	
5315-990-1338	BULK		5320-165-8818	BULK	
5320-012-2291	114H		5320-165-8820	154	
5320-038-3212	41		5320-165-8820	BULK	
5320-038-3382	49		5320-167-4943	160	15
5320-038-3382	BULK		5320-167-4944	42	38
5320-059-3312	154		5320-167-4944	BULK	
5320-060-5385	114E	4	5320-167-4945	42	40
5320-061-9660	BULK		5320-167-4946	121	2
5320-062-6628	BULK		5320-167-4946	121	4
5320-063-2447	154		5320-167-4946	154	
5320-063-2448	154		5320-167-4946	BULK	
5320-068-9987	154		5320-167-4949	154	59
5320-069-0781	154		5320-167-4950	42	41
5320-117-6010	BULK		5320-167-4950	46	121
5320-117-6021	BULK		5320-167-4950	136	21
5320-117-6376	BULK		5320-167-4950	136	38
5320-117-6377	BULK		5320-167-4950	136	41
5320-117-6382	BULK		5320-171-3771	BULK	
5320-117-6521	BULK		5320-205-7674	41	151
5320-117-6522	BULK		5320-205-7686	49	
5320-117-6523	BULK		5320-205-7705	49	
5320-117-6524	BULK		5320-205-7776	49	
5320-117-6525	BULK		5320-205-8511	49	78
5320-117-6815	50	103	5320-205-8511	BULK	
5320-117-6815	50	140	5320-205-8512	BULK	
5320-117-6885	BULK		5320-223-6092	BULK	
5320-117-6904	BULK		5320-223-6093	41	
5320-117-6907	BULK		5320-223-6093	51	
5320-117-6938	BULK		5320-223-6093	52	
5320-117-6939	37	18	5320-234-8570	192	27
5320-117-6943	188	25	5320-234-8570	193	26
5320-117-6950	BULK		5320-234-8570	194	5
5320-117-6951	178	18	5320-234-8570	195	11
5320-117-6951	BULK		5320-234-8570	195	7
5320-117-7224	BULK		5320-234-8570	196	5
5320-117-7225	BULK		5320-234-8570	197	5
5320-117-7286	BULK		5320-239-1286	42	39
5320-117-7289	49		5320-239-1286	48	41
5320-118-1762	47	4	5320-239-1287	BULK	

STOCK NUMBER	FIGURE NUMBER	ITEM NUMBER	STOCK NUMBER	FIGURE NUMBER	ITEM NUMBER
5320-239-1289	BULK		5320-579-1215	49	
5320-243-0671	45	51	5320-579-1215	154	
5320-243-3953	160	10	5320-579-5076	49	
5320-243-3955	160	19	5320-582-3268	BULK	
5320-243-8361	178	48	5320-582-3269	BULK	
5320-245-4323	BULK		5320-582-3270	BULK	
5320-252-6307	BULK		5320-582-3271	BULK	
5320-264-4247	43		5320-582-3273	123	14
5320-264-4266	194	8	5320-582-3274	BULK	
5320-269-9413	154	122	5320-582-3275	BULK	
5320-269-9414	154	123	5320-582-3276	BULK	
5320-269-9415	49	62	5320-582-3279	BULK	
5320-269-9415	49	65	5320-582-3288	BULK	
5320-269-9415	50	2	5320-582-3289	BULK	
5320-270-2772	192	11	5320-582-3298	BULK	
5320-270-2772	192	16	5320-582-3299	BULK	
5320-270-2772	192	19	5320-582-3300	BULK	
5320-270-2772	193	15	5320-582-3301	BULK	
5320-270-2772	193	18	5320-582-3302	BULK	
5320-270-2790	BULK		5320-582-3303	BULK	
5320-270-2798	50	1	5320-582-3304	128	
5320-285-9005	154		5320-582-3305	37	8
5320-286-4630	49		5320-582-3494	172	98
5320-286-4630	49	83	5320-582-3495	BULK	
5320-286-4630	50		5320-582-3497	BULK	
5320-286-4630	50	30	5320-582-3498	BULK	
5320-286-4630	50	37	5320-582-3499	BULK	
5320-286-4630	50	40	5320-582-3501	38	40
5320-286-4630	154		5320-582-3502	BULK	
5320-286-4704	49		5320-582-3503	BULK	
5320-286-4704	160	13	5320-582-3504	BULK	
5320-286-4704	160	23	5320-582-3506	107	20
5320-291-0419	192	3	5320-582-3516	BULK	
5320-291-0419	192	7	5320-582-3517	BULK	
5320-291-0419	193	5	5320-582-3520	BULK	
5320-291-0419	193	9	5320-582-3521	BULK	
5320-291-0419	194	16	5320-582-3522	BULK	
5320-297-2052	212A	129	5320-582-3523	BULK	
5320-300-9399	163	11	5320-582-7783	BULK	
5320-474-8313	114Q	4	5320-616-0377	BULK	
			5320-616-4353	BULK	
			5320-616-5855	BULK	
			5320-616-5860	BULK	
5320-489-4823	41		5320-619-0157	41	141
5320-489-4823	49		5320-619-0157	52	10
5320-489-4823	50		5320-619-0157	53	14
5320-489-4823	51		5320-619-0157	154	128
5320-489-4823	52		5320-630-5713	50	214
5320-489-4823	53		5320-630-5713	51	6
5320-489-4823	154		5320-630-5713	51	8
5320-489-4824	50		5320-630-5713	52	14
5320-489-4824	51		5320-637-4279	BULK	
5320-489-4824	52		5320-637-5005	BULK	
5320-489-4824	53		5320-637-5012	BULK	
5320-489-4824	150		5320-637-6025	BULK	
5320-531-0715	52	37	5320-638-4307	BULK	
5320-531-0719	52	9	5320-680-3598	50	317
5320-531-0719	53	11	5320-680-4456	52	43
5320-531-0736	52	29	5320-685-0320	BULK	
5320-531-0744	41	73	5320-702-3221	BULK	
5320-531-0744	49		5320-702-4999	48	6
5320-531-0744	BULK		5320-725-6927	BULK	
5320-531-0791	52	13	5320-753-3809	BULK	
5320-531-0791	BULK		5320-753-3830	191	11
5320-531-0792	41	139	5320-753-3830	191	16
5320-531-0792	49		5320-753-3830	191	29
5320-531-0792	52	8	5320-753-3830	195	14
5320-531-0792	BULK		5320-753-3830	BULK	
5320-531-0793	53	10	5320-781-8609	BULK	
5320-531-0793	BULK		5320-800-5704	123B	33
5320-558-3085	50	181	5320-800-7860	BULK	

STOCK NUMBER	FIGURE NUMBER	ITEM NUMBER	STOCK NUMBER	FIGURE NUMBER	ITEM NUMBER
5320-808-7822	39	16	5325-263-6632	194	3
5320-808-7822	BULK		5325-263-6651	BULK	
5320-819-5690	BULK		5325-270-8890	BULK	
5320-843-7881	42	9	5325-276-4945	115	89
5320-862-2816	114G	4	5325-276-4945	115	91
5320-878-7184	49		5325-276-4946	119	2
5320-911-9991	154	96	5325-276-4969	44	3
5320-911-9992	154	95	5325-276-4978	BULK	
5320-929-9305	BULK		5325-276-6089	BULK	
5320-945-8982	49	100	5325-276-6091	32	197
5320-945-8982	49	103	5325-276-6096	BULK	
5320-945-8982	49	106	5325-276-6100	BULK	
5320-945-8982	49	109	5325-276-6228	100	15
5320-945-8982	49	112	5325-276-6343	132	111
5320-945-8982	49	115	5325-276-6343	138	26
5320-945-8982	49	118	5325-276-6343	BULK	
5320-945-8982	49	121	5325-281-1557	129	29
5320-945-8982	49	94	5325-281-4965	50	226
5320-945-8982	49	97	5325-281-4965	50	234
5320-949-9193	154		5325-282-0624	112	3
5320-951-3216	102	12	5325-282-0624	130	84
5320-951-3216	BULK		5325-282-0624	139	24
5320-956-5737	79A		5325-282-2045	44	10
5320-956-5737	81A	52	5325-282-2045	44	12
5320-957-2867	188		5325-282-2045	44	14
5320-979-7618	113E	11	5325-282-2045	44	6
5320-986-0412	113E	138	5325-282-2045	44	8
5320-993-7108	BULK		5325-285-2804	191	25
5320-994-7076	191	10	5325-285-2804	191	6
5320-994-7076	191	13	5325-285-2804	194	2
5320-994-7076	191	18	5325-285-3373	50	43
5320-994-7076	191	20	5325-290-1960	138	16
5320-994-7076	191	32	5325-290-1960	BULK	
5320-994-7076	191	34	5325-290-2906	50	225
5320-994-7076	191	36	5325-290-5933	43	67
5320-994-7076	192	5	5325-290-5933	115	
5320-994-7076	192	9	5325-290-5933	115	92
5320-994-7076	193	10	5325-290-5933	126	10
5320-994-7076	193	7	5325-290-5933	126	23
5320-994-7076	195	6	5325-290-5933	126	3
5320-994-7076	196	8	5325-290-5933	126	6
5320-994-7076	197	8	5325-290-6163	BULK	
5320-994-7076	BULK		5325-290-8028	44	5
5325-141-3291	50	249	5325-290-8232	44	13
5325-141-3291	172	7	5325-290-8232	44	7
5325-141-7951	138	36	5325-290-8233	44	11
5325-171-4680	50		5325-290-8235	44	9
5325-171-6387	BULK		5325-291-0217	170	
5325-174-2923	43	66	5325-291-0217	BULK	
5325-174-2923	44	4	5325-291-2393	119	
5325-174-2923	49	45	5325-291-9360	135	23
5325-174-2923	115		5325-291-9366	BULK	
5325-174-2923	115	6	5325-292-0295	123B	42
5325-174-2923	115	86	5325-297-1970	132	
5325-174-5314	109	16	5325-298-6999	49	
5325-174-5315	BULK		5325-298-7003	112	2
5325-174-5316	123B	16	5325-332-5621	212A	66
5325-174-5317	128	12	5325-332-5621	213B	8
5325-174-5317	128A	105	5325-355-8963	50	238
5325-174-9008	BULK		5325-355-8963	50	241
5325-174-9038	138	25	5325-355-8963	50	244
5325-174-9038	BULK		5325-355-8963	132	150
5325-182-8960	175A	111	5325-440-3486	115	
5325-202-1604	BULK		5325-449-3024	132	100
5325-231-0315	50		5325-449-3156	50	
5325-250-6859	BULK		5325-449-3229	50	
5325-262-7834	BULK		5325-489-0931	132	102
5325-263-6632	128	13	5325-505-4798	50	250
5325-263-6632	170	10	5325-505-4798	50	296
5325-263-6632	191	24	5325-505-4798	50	299
5325-263-6632	191	5	5325-505-4798	50	48

STOCK NUMBER	FIGURE NUMBER	ITEM NUMBER	STOCK NUMBER	FIGURE NUMBER	ITEM NUMBER
5325-505-4798	87		5330-171-5047	106	81
5325-505-4798	87	95	5330-171-5047	106	82
5325-505-4798	113	32	5330-171-5048	96	141
5325-505-4798	114	52	5330-171-5048	96	143
5325-505-4798	130	87	5330-171-5048	96	97
5325-505-4798	130	90	5330-171-5048	96	99
5325-513-1726	49		5330-171-5048	103	14
5325-543-2418	135	21	5330-171-5048	103	15
			5330-171-5073	BULK	
			5330-171-5075	17	29
			5330-171-5075	17	31
			5330-171-5075	92	17
5325-584-0024		33	5330-171-5075	92	18
5325-584-0024	139	25	5330-171-5075	92	8
5325-619-6807	121	1	5330-171-5075	92	9
5325-639-5575	41	92	5330-171-5075	96	114
5325-693-2837	213A	9	5330-171-5075	96	116
5325-700-6014	50	233	5330-171-5075	96	117
5325-769-5359	132	104	5330-171-5099	166	8
5325-808-0572	115		5330-171-5099	BULK	
5325-923-1041	214		5330-171-5889	97	51
5330-023-7623	11	29	5330-171-5889	100	36
5330-023-7623	208	14	5330-171-5889	100	38
5330-032-1966	113F	70	5330-171-5889	100	57
5330-037-9120	214A	325	5330-171-5889	100	58
5330-037-9389	214A	19	5330-171-5889	BULK	
5330-037-9425	214A	245	5330-171-5893	85	26E
5330-037-9425	214A	254	5330-171-5897	103	8
5330-037-9427	214A	365	5330-171-5902	164	11
5330-037-9444	214A	361	5330-171-5902	BULK	
5330-037-9691	214A	167	5330-171-6746	100	49
5330-049-6380	113C	28	5330-171-6746	100	50
5330-050-1211	103	36	5330-171-6748	96	
5330-050-1211	103	43	5330-171-6748	103	19
5330-050-1211	106	16	5330-171-6748	103	20
5330-050-1211	85B	39	5330-171-6757	BULK	
5330-050-1211	104A	42	5330-171-6758	92	11
5330-050-1224	76B	8	5330-171-6758	92	12
5330-050-1224	104A	28	5330-171-6758	BULK	
5330-054-6880	BULK		5330-171-6760	96	100
5330-054-6890	18	2	5330-171-6760	96	102
5330-057-6953	178		5330-171-6768	106	138
5330-066-2781	158		5330-171-6768	106	96
5330-067-3358	96	142	5330-171-6768	106	97
5330-067-3358	96	75	5330-171-6768	BULK	
5330-067-3358	96	98	5330-171-6770	BULK	
5330-067-3358	103	13	5330-171-6945	74	23
5330-071-5927	178		5330-171-6945	75	36
5330-074-4017	174	19	5330-171-6945	76	22
5330-076-6057	18	22	5330-171-6945	76	27
5330-083-9019	178		5330-171-6945	76	61
5330-083-9019	178	43	5330-171-6945	76	66
5330-084-7777	203		5330-171-6945	79	79
5330-141-3445	114B	13	5330-171-6945	174	10
5330-141-3445	114D	15	5330-171-7346	96	138
5330-141-3479	19	27	5330-171-7346	96	140
5330-141-4206	38	64	5330-171-7379	97	36
5330-141-4206	38	67	5330-171-7379	97	39
5330-148-4690	200	47	5330-171-7379	97	41
5330-148-4690	200	47	5330-171-7379	97	44
5330-154-1223	23		5330-171-7379	97	46
5330-166-1430	214A	405	5330-171-7379	97	49
5330-171-5042	103	49	5330-171-7380	100	34
5330-171-5044	96		5330-171-7380	100	35
5330-171-5044	103	52	5330-171-7380	BULK	
5330-171-5047	96	109	5330-171-8068	104A	44
5330-171-5047	96	111	5330-171-9220	164	8
5330-171-5047	100	23	5330-171-9225	96	105
5330-171-5047	100	24	5330-171-9225	96	107
5330-171-5047	100	29	5330-176-3111	113F	41
5330-171-5047	106	76	5330-178-7298	18	

STOCK NUMBER	FIGURE NUMBER	ITEM NUMBER	STOCK NUMBER	FIGURE NUMBER	ITEM NUMBER
5330-180-5441	175E	16	5330-199-5873	206	9
5330-182-1288	BULK		5330-199-5886	208	27
5330-186-1295	32		5330-202-1521	76B	21
5330-186-1295	33		5330-202-1521	79A	15
5330-186-1295	147		5330-202-1521	81A	3
5330-186-1295	148		5330-202-2272	175	4
5330-186-1295	181		5330-202-4475	94	9
5330-186-1380	28	21	5330-202-5047	184	7
5330-186-1380	32		5330-226-1833	76	29
5330-186-1380	32	159	5330-226-1833	76	68
5330-186-1380	32	42	5330-227-9483	100	2
5330-186-1380	33		5330-227-9483	100	4
5330-186-1380	35		5330-227-9483	103	24
5330-186-1380	35	29	5330-227-9483	103	9
5330-186-1380	144		5330-227-9483	106	121
5330-186-1380	144		5330-227-9483	106	123
5330-186-1380	144		5330-227-9483	106	125
5330-186-1380	144		5330-227-9483	114E	60
5330-186-1380	144		5330-227-9483	114F	76
5330-186-1380	145		5330-227-9483	114F	84
5330-186-1380	147		5330-228-5466	175A	100
5330-186-1380	148		5330-240-1954	207	34
5330-186-1381	31	22	5330-242-6628	200	46
5330-186-1381	32	167	5330-242-6635	113E	117
5330-186-1381	147		5330-242-6636	113E	110
5330-186-1381	148		5330-242-6636	113E	38
5330-186-4946	28	4	5330-242-6636	113E	43
5330-186-4947	17	18	5330-242-6637	BULK	
5330-186-4947	32		5330-242-6637	113E	33
5330-186-4947	32	205	5330-242-6638	BULK	
5330-186-4947	32	46	5330-242-6640	198	19
5330-186-4947	33		5330-242-6640	206	18
5330-186-4947	54	24	5330-246-5794	214A	219
5330-186-4947	54	48	5330-248-3833	79A	31
5330-186-4947	85		5330-248-3833	81A	17
5330-186-4947	97	5	5330-248-3834	79A	17
5330-186-4947	106	39	5330-248-3835	79A	3
5330-186-4947	144		5330-248-3836	79A	20
5330-186-4947	144		5330-248-3836	81A	5
5330-186-4947	144		5330-248-3846	175C	26
5330-186-4947	144		5330-248-3848	79A	5
5330-186-4947	144		5330-250-0230	77	
5330-186-4947	144		5330-250-0230	78	11
5330-186-4947	145		5330-250-0230	78	20
5330-186-4947	147		5330-250-0230	78	5
5330-186-4947	148		5330-250-0230	78	8
5330-186-4947	162	15	5330-250-0230	79	159
5330-186-4947	165	10	5330-250-0230	80	
5330-186-4947	181		5330-250-0230	80	103
5330-194-3711	123A	42	5330-250-0230	81	
5330-194-3713	34	18	5330-250-0230	81	86
5330-194-3713	149	14	5330-250-0230	124	
5330-194-3713	162A	5	5330-250-0230	124	44
5330-194-3719	164	12	5330-250-0230	124	56
5330-194-3720	114E	10	5330-250-1217	210	36
5330-194-3720	114G	126	5330-250-1218	158	2
5330-194-3720	114H	101	5330-250-1220	204	18
5330-194-3720	114J	86	5330-250-1220	206	72
5330-194-3721	17	35	5330-250-1220	206	82
5330-194-3722	164	9	5330-250-1221	206	79
5330-196-5314	96	139	5330-250-1223	207	33
5330-196-5314	BULK		5330-251-8839	32	170
5330-196-5381	BULK		5330-251-8839	84	
5330-196-6695	34	24	5330-251-8839	181	
5330-196-6695	34	29	5330-251-8839	182	8
5330-196-6695	149	26	5330-252-6048	113E	104
5330-196-6695	149	28	5330-252-6048	113E	128
5330-198-6163	BULK		5330-252-9165	BULK	
5330-198-6163	KITS		5330-256-0195	BULK	
5330-198-6204	BULK		5330-256-4103	214A	147
5330-199-5873	184	26	5330-260-8156	134	3

STOCK NUMBER	FIGURE NUMBER	ITEM NUMBER	STOCK NUMBER	FIGURE NUMBER	ITEM NUMBER
5330-260-8178	114D	45	5330-291-3291	203	7
5330-260-9275	190A		5330-291-3291	205	10
5330-260-9311	84B	19	5330-291-3291	206	76
5330-261-2896	214A		5330-291-4179	125B	16
5330-263-4587	214A	315	5330-291-7295	81A	24
5330-263-4587	214A	358	5330-291-8898	175G	13
5330-263-4601	214A	223	5330-291-8910	175F	9
5330-263-7924	214A	577	5330-292-0436	181A	20
5330-263-7924	214A	578	5330-292-0444	114S	34
5330-263-7925	214A	419	5330-292-0511	214A	406
5330-263-8011	78	18	5330-292-0570	31	19
5330-263-8012	206	11	5330-292-0570	31	31
5330-263-8028	124	40	5330-292-0570	BULK	
5330-263-8030	77		5330-292-0580	114L	53
5330-263-8031	80		5330-292-0580	114T	25
5330-263-8031	81		5330-292-3318	214A	536
5330-263-8033	79		5330-292-3318	214A	543
5330-263-8033	79	172	5330-292-4310	214A	404
5330-263-8033	79	64	5330-297-4424	25	42
5330-263-8033	80	113	5330-297-6527	17	34
5330-263-8033	80	96	5330-297-9832	157	
5330-263-8033	81	79	5330-297-9908	214A	123
5330-263-8033	81	96	5330-297-9908	214A	345
5330-263-8034	77	41	5330-297-9909	214A	462
5330-263-8034	77	46	5330-297-9986	166	12
5330-263-8034	79	167	5330-297-9990	76B	15
5330-263-8034	80	105	5330-297-9990	BULK	
5330-263-8034	81	88	5330-297-9990	104A	20
5330-265-1075	175C	25	5330-298-0434	207	
5330-265-1078	175G		5330-298-0438	207	
5330-265-1084	79A	25	5330-298-0445	214A	294
5330-265-1084	81A	10	5330-298-3900	96	121
5330-265-1088	175F	11	5330-298-3900	96	123
5330-265-1089	124	83	5330-298-4929	79A	11
5330-265-1090	175C	39	5330-298-5788	214A	373
5330-265-1092	123A	8	5330-298-5788	214A	396
5330-265-7988	214A	523	5330-298-5791	78A	10
5330-265-7988	214A	528	5330-350-9013	17	39
5330-265-7991	214A		5330-350-9013	30	28
5330-285-8150	214A	434	5330-350-9013	96	110
5330-285-8150	214A	463	5330-350-9013	96	112
5330-285-8150	214A	469	5330-350-9013	100	22
5330-285-9427	214A	501	5330-350-9013	100	25
5330-285-9842	25	29	5330-350-9013	100	26
5330-285-9842	31	10	5330-350-9013	100	27
5330-285-9842	31	14	5330-350-9013	100	28
5330-285-9842	31	21	5330-350-9013	101	108
5330-285-9842	31	29	5330-350-9013	101	74
5330-285-9842	32	153	5330-350-9013	106	102
5330-285-9842	32	166	5330-350-9013	106	74
5330-285-9842	84	2	5330-350-9013	106	77
5330-285-9842	147		5330-350-9013	106	78
5330-285-9842	148		5330-350-9013	106	79
5330-285-9842	157	28	5330-350-9013	106	92
5330-285-9842	181		5330-350-9013	76B	11
5330-285-9847	BULK		5330-350-9013	81A	21
5330-286-0389	113A	91	5330-350-9013	104A	32
5330-286-0389	114R	75	5330-350-9013	114T	26
5330-290-1483	214A	128	5330-350-9013	125A	36
5330-290-1483	214A	228	5330-350-9013	175C	29
5330-290-7953	114S	44	5330-370-7857	176	22
5330-290-9383	209	8	5330-370-7857	176	26
5330-290-9390	184	5	5330-390-7650	113C	38
5330-290-9391	23	9	5330-433-8437	114B	16
5330-290-9393	BULK		5330-433-8437	114D	19
5330-290-9402	200	17	5330-441-8225	175D	11
5330-291-3281	125A	6	5330-441-8292	175D	53
5330-291-3282	207	38	5330-442-1937	214A	66
5330-291-3283	206	20	5330-442-2590	214A	309
5330-291-3285	206	51	5330-443-2979	114B	40
5330-291-3287	206		5330-443-2979	114D	42

STOCK NUMBER	FIGURE NUMBER	ITEM NUMBER	STOCK NUMBER	FIGURE NUMBER	ITEM NUMBER
5330-443-5207	113E		5330-579-3161	25	10
5330-474-8534	25		5330-579-3163	25	
5330-474-8538	25		5330-579-3163	100	32
5330-474-8539	25		5330-579-3163	100	33
5330-474-8542	27		5330-579-3163	BULK	
5330-474-8638	BULK		5330-579-3163	181A	
5330-474-8829	BULK		5330-579-7544	125A	123
5330-474-8895	BULK		5330-579-7911	96	106
5330-474-8896	25	40	5330-579-7911	96	39
5330-474-8898	25		5330-579-7914	17	32
5330-474-8899	158	63	5330-579-7914	76	12
5330-478-9674	189		5330-579-7916	BULK	
5330-479-0177	184	18	5330-579-7918	181A	65
5330-479-1603	189		5330-579-7925	96	101
5330-483-9866	175A	105	5330-579-8156	25	33
5330-487-5593	114C		5330-579-8156	97	35
5330-487-6433	114S	68	5330-579-8156	97	37
5330-487-8205	114G	37	5330-579-8156	97	38
5330-487-8205	114H	37	5330-579-8156	97	40
5330-487-8205	114J	29	5330-579-8156	97	42
5330-514-3289	23	32	5330-579-8156	97	43
5330-514-3289	25		5330-579-8156	97	45
5330-515-5145	214A	253	5330-579-8156	97	47
5330-522-6514	214A	232	5330-579-8156	97	48
5330-522-7616	175C	14	5330-579-8156	106	133
5330-526-8902	113		5330-579-8156	85B	29
5330-526-8902	114		5330-579-8156	85B	38
5330-527-8018	113F	6	5330-579-8156	181A	70
5330-527-9778	56	72	5330-580-5327	76	
5330-530-3516	114B	5	5330-580-5327	76	
5330-530-3516	114D	5	5330-580-5327	81	
5330-530-3516	114L	12	5330-580-5329	17	14
5330-530-3522	114B	10	5330-580-5329	17	8
5330-530-3522	114D	10	5330-582-1538	103	35
5330-530-4341	92	6	5330-582-1538	103	42
5330-530-4341	100	39	5330-582-2108	BULK	
5330-530-4341	100	55	5330-582-2113	106	122
5330-530-4341	106	101	5330-582-2113	106	124
5330-530-4341	106	139	5330-582-2116	106	100
5330-530-4341	106	91	5330-582-2116	106	90
5330-530-4341	BULK		5330-582-2133	34	31
5330-543-7088	106	134	5330-582-2133	96	122
5330-543-7088	106	135	5330-582-2133	149	30
5330-543-7088	85B	44	5330-582-2133	166	9
5330-544-2919	214A	45	5330-582-2133	104A	7
5330-544-2919	214A	48	5330-582-2146	106	106
5330-559-1291	103	18	5330-582-2855	97	50
5330-559-6182	17	30	5330-582-2855	100	37
5330-559-6182	92	16	5330-582-2855	100	56
5330-559-6182	92	7	5330-582-2855	106	137
5330-559-6182	96	115	5330-582-2855	106	95
5330-559-6182	96	118	5330-582-2855	104A	10
5330-559-6182	106	89	5330-582-2856	BULK	
5330-559-6182	106	99	5330-584-0263	92	10
5330-559-6182	181A		5330-584-0263	35A	6
5330-559-6184	85	26G	5330-584-0265	12	57
5330-559-8674	200		5330-584-0265	17	11
5330-576-3206	BULK		5330-584-0265	17	4
5330-576-4081	210	11	5330-584-0265	103	28
5330-576-4082	200	19	5330-584-0265	103	48
5330-576-4669	208	15	5330-584-0265	44B	11
5330-576-9732	76	38	5330-584-0265	181A	
5330-579-1070	84A	16	5330-584-0265	181A	64
5330-579-1070	84B	18	5330-584-0266	103	51
5330-579-3156	12	55	5330-584-0266	106	129
5330-579-3156	103	7	5330-584-0266	35A	19
5330-579-3156	106	17	5330-584-0266	84A	17
5330-579-3156	181A		5330-584-0266	125B	2
5330-579-3158	104A	34	5330-584-0266	162A	6
5330-579-3158	113F	14	5330-584-0266	181A	27
5330-579-3158	113F	21	5330-584-1038	100	48

STOCK NUMBER	FIGURE NUMBER	ITEM NUMBER	STOCK NUMBER	FIGURE NUMBER	ITEM NUMBER
5330-584-1038	106	105	5330-641-3407	85	26D
5330-584-1038	181A	17	5330-641-3819	114E	11
5330-584-9080	11	26	5330-641-5245	114T	20
5330-584-9080	175	10	5330-641-5794	165	53
5330-585-0871	114G	62	5330-641-7517	114A	13
5330-585-0871	114H	62	5330-641-8494	113C	41
5330-585-0871	114J	49	5330-663-5970	200	
5330-585-1064	BULK		5330-663-6880	128A	160
5330-585-4623	181A	69	5330-663-7151	166	11
5330-591-6685	18	13	5330-663-7151	BULK	
5330-599-0046	189		5330-663-7158	182	15
5330-599-0047	190	40	5330-684-3206	182	9
5330-599-0523	28	6	5330-684-3418	114B	33
5330-599-0523	BULK		5330-684-3418	114D	
5330-599-0878	214A	111	5330-684-3419	104A	8
5330-599-0878	214A	284	5330-684-3419	181A	24
5330-599-0927	162A	9	5330-684-7787	38	
5330-599-1108	114B	93	5330-684-7795	16	55
5330-599-1108	114D	101	5330-691-0145	85B	43
5330-599-1108	114D	79	5330-701-5772	BULK	
5330-599-1319	74	12	5330-702-4562	38	58
5330-599-1319	75	21	5330-702-7656	158	
5330-599-1319	174	6	5330-707-6807	157	
5330-599-1432	114D	35	5330-712-0532	195	15
5330-599-1469	114B	41	5330-712-6092	113B	19
5330-599-1469	114D	43	5330-713-1401	23	1
5330-599-1469	114D	76	5330-718-4844	204	3
5330-599-2056	212A	217	5330-722-0101	189	11
5330-599-2239	214A		5330-722-0101	206	53
5330-599-2295	113E	37	5330-722-0101	208	57
5330-599-2295	113E	93	5330-722-0103	189	12
5330-599-3052	190		5330-722-1734	207	51
5330-599-5989	32	176	5330-722-1734	202A	19
5330-599-5989	181	32	5330-726-1235	34	25
5330-599-5989	206	62	5330-726-1235	149	21
5330-599-6373	198	6	5330-726-1235	149	25
5330-599-6437	113F	75	5330-729-5041	207	41
5330-599-7018	198	33	5330-732-1733	150	33
5330-599-7708	56	8	5330-738-0543	175	7
5330-599-7708	BULK		5330-752-1558	BULK	
5330-599-8170	190A	26	5330-752-1558	175A	65
5330-599-8208	190A	27	5330-773-2650	25	39
5330-599-8381	17	28	5330-798-7760	178	22
5330-599-9761	38	47	5330-803-2648	207	39
5330-601-0300	27	7	5330-803-2651	206	71
5330-603-0238	16	44	5330-803-2652	206	49
5330-603-0238	16	90	5330-803-2652	208	18
5330-608-6432	16	36	5330-803-2652	211	6
5330-611-8010	178	53	5330-803-7208	17	6
5330-613-5463	114E	78	5330-803-7208	85B	23
5330-613-5463	114F	94	5330-804-5694	22	7
5330-618-3755	79A	41	5330-804-5694	76	2
5330-618-8893	96		5330-804-5694	76	47
5330-624-5393	E30A		5330-804-5694	76	5
5330-630-5958	106	103	5330-804-5695	17	10
5330-630-5958	106	75	5330-804-5695	25	
5330-630-5958	106	80	5330-804-5695	32	
5330-630-5958	106	93	5330-804-5695	33	
5330-640-9466	175D	61	5330-804-5695	34	6
5330-640-9634	208		5330-804-5695	74	
5330-641-0109	113E	111	5330-804-5695	75	29
5330-641-0109	113E	39	5330-804-5695	76	31
5330-641-0178	178	25	5330-804-5695	76	70
5330-641-0178	178	62	5330-804-5695	103	1
5330-641-0231	BULK		5330-804-5695	123	72
5330-641-0887	157	41	5330-804-5695	147	
5330-641-1571	103	10	5330-804-5695	148	
5330-641-1571	103	23	5330-804-5695	149	7
5330-641-2293	175C	10	5330-804-5695	157	
5330-641-2649	28	19	5330-804-5695	158	
5330-641-3260	185	5	5330-804-5695	173	

STOCK NUMBER	FIGURE NUMBER	ITEM NUMBER	STOCK NUMBER	FIGURE NUMBER	ITEM NUMBER
5330-804-5695	181		5330-808-0794	148	
5330-804-5695	85B	21	5330-808-0794	155	18
5330-805-2966	11		5330-808-0794	158	4
5330-805-2966	17	17	5330-808-0794	162	28
5330-805-2966	17	23	5330-808-0794	35A	32
5330-805-2966	31	17	5330-808-0794	35A	35
5330-805-2966	31	27	5330-808-0794	84A	19
5330-805-2966	31	3	5330-808-0794	84A	24
5330-805-2966	31	6	5330-808-0794	84B	21
5330-805-2966	32		5330-808-0794	84B	26
5330-805-2966	32	204	5330-808-0794	162A	19
5330-805-2966	32	208	5330-815-9489	25	32
5330-805-2966	32	210	5330-815-9489	31	36
5330-805-2966	32	41	5330-815-9489	31	38
5330-805-2966	32	45	5330-815-9489	170	9
5330-805-2966	33		5330-815-9489	174	2
5330-805-2966	34	4	5330-815-9489	208	17
5330-805-2966	54		5330-816-3546	74	
5330-805-2966	54	23	5330-816-3546	75	
5330-805-2966	54	47	5330-819-0167	178	
5330-805-2966	77	13	5330-820-5600	134	14
5330-805-2966	85		5330-821-5706	114S	4
5330-805-2966	97	6	5330-832-1222	125A	44
5330-805-2966	100	63	5330-833-7491	34	2
5330-805-2966	106	38	5330-833-7491	149	34
5330-805-2966	144		5330-833-7491	125A	38
5330-805-2966	144		5330-835-7485	28	3
5330-805-2966	144		5330-835-7485	30	27
5330-805-2966	144		5330-853-6655	151	24
5330-805-2966	144		5330-853-6655	BULK	
5330-805-2966	144		5330-855-7783	25	38
5330-805-2966	144		5330-855-7783	158	74
5330-805-2966	144		5330-855-8257	25	
5330-805-2966	145		5330-855-8421	27	8
5330-805-2966	145	157	5330-868-1092	175F	
5330-805-2966	147		5330-872-1252	175E	34
5330-805-2966	148		5330-872-3341	162B	12
5330-805-2966	149	32	5330-883-8218	BULK	
5330-805-2966	162	1D	5330-883-8226	75	26
5330-805-2966	162	14	5330-887-4662	114A	42
5330-805-2966	162	25	5330-887-4662	114C	93
5330-805-2966	165	9	5330-895-3890	178	
5330-805-2966	167	17	5330-914-1826	178	
5330-805-2966	181		5330-918-6341	212A	219
5330-805-2966	84A		5330-948-0962	114D	
5330-805-8380	BULK		5330-948-6602	BULK	
5330-808-0794	32		5330-948-9886	48	33
5330-808-0794	32	100	5330-951-6506	158	37
5330-808-0794	32	158	5330-954-2739	178	
5330-808-0794	32	31	5330-956-3342	157	12
5330-808-0794	32	57	5330-956-3342	157	42
5330-808-0794	32	59	5330-977-7495	205	22
5330-808-0794	32	98	5330-989-6030	206	47
5330-808-0794	33		5340-010-3090	152	27
5330-808-0794	35		5340-012-9230	175B	5
5330-808-0794	35	28	5340-025-7038	191	19
5330-808-0794	76	54	5340-025-7038	191	35
5330-808-0794	85		5340-026-9050	114H	27
5330-808-0794	96	126	5340-026-9050	114J	21
5330-808-0794	96	128	5340-032-1817	90A	11
5330-808-0794	96	130	5340-038-0299	114P	23
5330-808-0794	103	25	5340-050-1590	125B	18
5330-808-0794	103	30	5340-051-2394	118	104
5330-808-0794	103	38	5340-057-2625	BULK	
5330-808-0794	106	126	5340-061-1812	57	1
5330-808-0794	144		5340-061-1812	BULK	
5330-808-0794	144		5340-065-0655	177	1
5330-808-0794	144		5340-079-1156	169	56
5330-808-0794	145		5340-079-1157	169	58
5330-808-0794	145		5340-081-5392	96	17
5330-808-0794	147		5340-081-5397	96	9

STOCK NUMBER	FIGURE NUMBER	ITEM NUMBER	STOCK NUMBER	FIGURE NUMBER	ITEM NUMBER
5340-086-7357	154		5340-218-8715	162B	
5340-086-7358	154		5340-226-4960	118	132
5340-090-7917	200	41	5340-226-4960	118	32
5340-095-9633	114S	14	5340-226-4960	118	86
5340-096-1422	113E	182	5340-229-2827	125B	27
5340-096-1422	113E	196	5340-229-3947	114S	46
5340-096-1423	113E		5340-235-1607	114A	11
5340-096-1498	113E	177	5340-235-1607	114C	29
5340-096-1499	113E		5340-236-2294	175A	75
5340-096-1503	113E		5340-247-7678	84B	12
5340-127-4979	175A	13	5340-252-4764	188	
5340-141-3192	24	22	5340-257-0198	BULK	
5340-141-3192	24	32	5340-257-0210	152	29
5340-141-3193	18		5340-257-3765	67	13
5340-141-6433	BULK		5340-263-1143	125B	24
5340-147-6532	186	6	5340-265-9982	214A	247
5340-148-8898	214A	431	5340-268-0945	175A	73
5340-152-2667	198	9	5340-270-8539	130	64
5340-167-2783	113E		5340-274-9857	175F	7
5340-167-2786	113E		5340-281-6623	104	10
5340-167-2787	113E		5340-281-6623	104	42
5340-167-2788	113E		5340-281-6623	104	69
5340-180-3708	175F	24	5340-281-6623	104	85
5340-181-5814	114A	33	5340-281-6623	206	69
5340-181-5814	114C	7	5340-281-6655	184	
5340-181-5830	113E		5340-282-1648	18	21
5340-183-4356	174		5340-282-1661	BULK	
5340-183-7997	114A	12	5340-282-1832	175D	5
5340-183-7997	114C	30	5340-282-2361	175D	9
5340-186-3389	213A		5340-282-4971	114A	39
5340-187-2853	123B	58	5340-282-4971	114C	96
5340-200-2545	184	6	5340-282-4971	114L	50
5340-200-2561	107	40	5340-282-5322	106	68
5340-200-2561	107	59	5340-282-5322	114P	77
5340-200-4175	30	18	5340-282-5322	114Q	56
5340-200-4175	79		5340-282-5584	156	10
5340-200-4175	79	102	5340-282-6303	178	
5340-200-4175	79	109	5340-282-6343	125B	33
5340-200-4175	79	120	5340-285-6695	165	58
5340-200-4175	79	127	5340-285-6974	19	17
5340-200-4175	79	184	5340-285-6974	19	19
5340-200-4175	79	186	5340-285-7010	BULK	
5340-200-4175	79	188	5340-285-7939	178	38
5340-200-4175	79	190	5340-286-2458	BULK	
5340-200-4175	80	129	5340-286-8443	27	12
5340-200-4175	81	114	5340-286-9282	113F	166
5340-200-4184	157	55	5340-286-9595	93	41
5340-200-4187	18	5	5340-290-0067	198	
5340-200-4192	100	43	5340-290-3940	114G	13
5340-200-4687	200		5340-290-3940	114H	15
5340-200-7220	125A		5340-290-3940	114J	12
5340-200-7566	77	23	5340-290-4476	106	143
5340-200-7579	BULK		5340-290-4480	106	141
5340-200-7768	199		5340-290-5090	157	54
5340-200-8346	113E	169	5340-290-5124	16	67
5340-201-0272	135	22	5340-290-5124	34	34
5340-202-6207	214A	233	5340-290-5124	165	70
5340-203-8967	85	44	5340-290-7229	E18	7
5340-205-4223	21		5340-290-7231	157	48
5340-205-4737	16	35	5340-291-3493	BULK	
5340-205-6728	25	9	5340-291-3495	103	60
5340-205-6965	113E	6	5340-291-3537	123	
5340-209-0249	113E	45	5340-291-3667	16	89
5340-209-0415	93	4	5340-291-7685	26	26
5340-209-4277	104	11	5340-298-9456	16	54
5340-209-4277	104	43	5340-299-1062	175E	18
5340-209-4277	104	70	5340-299-1068	113F	93
5340-209-4277	104	86	5340-307-4512	162A	25
5340-214-1428	113F	111	5340-313-6846	140	34
5340-214-1428	113F	92	5340-313-6846	140	40
5340-214-1433	114G	120	5340-313-6846	BULK	

STOCK NUMBER	FIGURE NUMBER	ITEM NUMBER	STOCK NUMBER	FIGURE NUMBER	ITEM NUMBER
5340-321-3452	113C	53	5340-479-1107	207	12
5340-321-3821	113E	141	5340-485-1049	214A	472
5340-321-3822	113E		5340-487-5671	BULK	
5340-321-3823	113E		5340-487-5671	114B	7
5340-321-6370	178	33	5340-487-5671	114D	7
5340-323-4926	103	5	5340-487-5671	114L	14
5340-326-3435	50	257	5340-487-8213	114G	21
5340-326-6712	198	31	5340-487-8213	114H	23
5340-329-0377	113E	1	5340-487-8213	114J	17
5340-334-0815	198		5340-489-3446	132	
5340-334-2529	45		5340-505-4015	92	15
5340-334-5765	85	26B	5340-506-0623	200	
5340-336-0719	207	46	5340-509-3927	96	35
5340-336-2530	160	1	5340-509-3927	106	11
5340-338-0890	109	9	5340-513-0907	BULK	
5340-345-4451	104A	31	5340-514-0355	178	45
5340-346-2213	100	17	5340-514-1449	BULK	
5340-370-4629	90A	37	5340-515-2806	191	
5340-370-9647	212A	163	5340-520-2027	113E	127
5340-370-9647	212A	43	5340-520-2027	113F	48
5340-370-9647	212A	81	5340-521-6236	160	4
5340-370-9647	212A	84	5340-523-0924	160	6
5340-373-8836	212A	125	5340-528-6727	E16	5
5340-376-5773	42	6	5340-529-6923	214A	75
5340-376-5774	42	4	5340-530-5354	BULK	
5340-376-6878	175C	7	5340-530-5357	101	110
5340-386-4441	190		5340-530-7968	119	35
5340-386-4441	198		5340-531-6524	113E	
5340-386-4441	206		5340-531-6884	140	10
5340-386-4441	207		5340-531-6884	141	14
5340-388-9191	114E	107	5340-533-3491	BULK	
5340-388-9191	114F	46	5340-533-3510	BULK	
5340-397-9954	113F	11	5340-533-3512	137	38
5340-413-1977	70	7	5340-533-3513	122	5
5340-433-3269	BULK		5340-533-3513	122	7
5340-442-2549	214A	348	5340-533-3513	BULK	
5340-442-2550	214A		5340-533-3514	BULK	
5340-442-5562	214A	372	5340-533-3515	154	231
5340-443-5202	113E	278	5340-533-3515	BULK	
5340-443-5203	113E		5340-533-3600	41	96
5340-443-5204	113E		5340-533-3618	BULK	
5340-443-5205	113E		5340-533-3653	174	
5340-443-5206	113E		5340-533-3654	210	34
5340-443-5208	113E		5340-537-1366	113E	
5340-443-5209	113E		5340-537-1367	113E	
5340-443-5210	113E		5340-537-1368	113E	
5340-443-5211	113E		5340-537-1369	113E	
5340-443-5212	113E		5340-537-1370	113E	
5340-443-5213	113E		5340-537-1371	113E	
5340-443-5446	113E	148	5340-537-1372	113E	
5340-443-5446	113E	225	5340-541-3620	45	9
5340-443-5448	113E		5340-544-0917	117	29
5340-443-5450	113E		5340-544-0917	117	64
5340-443-5452	113E		5340-544-0917	117	90
5340-443-5454	113E		5340-544-0917	118	122
5340-443-5455	113E		5340-544-0917	118	13
5340-443-5458	113E		5340-544-0917	118	22
5340-443-5460	113E		5340-544-2294	BULK	
5340-443-5461	113E		5340-545-5788	16	69
5340-446-6459	214A	352	5340-548-7703	152	34
5340-474-3603	BULK		5340-548-7812	75	1
5340-475-3920	132		5340-548-7812	133	3
5340-478-9413	190		5340-550-3072	96	18
5340-478-9414	190		5340-550-3072	96	24
5340-478-9989	201	12	5340-550-3097	27	10
5340-478-9990	188	10	5340-558-3617	113	
5340-479-0001	203	12	5340-558-3617	114	
5340-479-0082	208		5340-559-8851	164	3
5340-479-1104	200	21	5340-560-5384	67	12
5340-479-1106	200		5340-563-9941	11	14
5340-479-1107	190	38	5340-572-8020	162	3

STOCK NUMBER	FIGURE NUMBER	ITEM NUMBER	STOCK NUMBER	FIGURE NUMBER	ITEM NUMBER
5340-574-6018	100	47	5340-619-7229	113E	181
5340-576-6103	92		5340-619-7229	113E	185
5340-579-5972	106	14	5340-619-7229	113E	86
5340-579-6359	113		5340-619-7229	114E	20
5340-579-6359	114		5340-619-7229	114F	15
5340-579-6359	BULK		5340-619-7556	44	46
			5340-619-7556	101	104
			5340-619-7556	101	66
5340-580-5787	116	7	5340-620-8255	BULK	
5340-580-5791	59	8	5340-624-3176	178	
5340-580-5791	61	14	5340-626-7262	157	58
5340-580-5791	64	5	5340-628-5580	123	61
			5340-628-5595	211	
5340-580-5873	85	9	5340-629-1744	11	17
5340-584-6176	50		5340-631-3881	F4	3
5340-584-6176	123	107	5340-631-3902	BULK	
5340-595-0636	190	35	5340-631-3903	BULK	
5340-595-0636	190	60	5340-632-1249	BULK	
5340-595-0636	198	10	5340-632-1251	12	34
5340-595-0636	206	35	5340-632-1251	108	6
5340-595-0636	207		5340-632-1254	BULK	
5340-595-0637	190		5340-633-5974	K4	
5340-595-0637	198		5340-633-5974	BULK	
5340-595-0637	206		5340-634-7884	BULK	
5340-595-0637	207		5340-639-0648	159	38
5340-595-0639	198	12	5340-639-0649	123	3
5340-595-5654	93	5	5340-653-0214	141	21
5340-595-6171	181A		5340-656-3168	214A	
5340-596-6795	12		5340-663-0034	76	37
5340-596-6804	16	42	5340-663-2642	213A	
5340-596-6804	16	61	5340-664-0650	162	18
5340-596-7201	179	13	5340-664-0651	162	6
5340-596-8846	165	48	5340-664-0652	162	
5340-597-3305	106	142	5340-664-0654	165	
5340-597-3309	80	131	5340-664-0675	162	17
5340-597-3309	80	48	5340-664-1047	162	64
5340-597-3309	81	112	5340-664-1756	82	42
5340-597-3309	81	37	5340-664-1756	82	44
5340-597-4356	125A	106	5340-664-1756	82	82
5340-597-4471	113A	1	5340-664-1756	82	84
5340-597-4471	114R	1	5340-664-1756	151	31
5340-597-8356	18	12	5340-664-1756	155	32
5340-597-8450	198	8	5340-664-1822	113E	
5340-597-8584	190		5340-664-2336	186	
5340-598-1474	41		5340-664-2867	157	
5340-598-1474	132	103	5340-664-3687	114E	114
5340-598-1840	114B	80	5340-664-3687	114F	51
5340-598-1875	178	50	5340-664-3783	90	7
5340-598-2082	100	52	5340-664-5563	114T	15
5340-598-2203	114A	38	5340-664-5564	114T	14
5340-598-2203	114C	2	5340-664-6165	96	43
5340-598-2203	114L	49	5340-664-6165	106	70
5340-598-2340	175A	46	5340-664-7382	118	112
5340-598-3585	113E	209	5340-664-8121	BULK	
5340-598-5416	BULK		5340-664-8140	50	
5340-598-5417	25		5340-664-8140	BULK	
5340-598-5662	133	21	5340-664-8141	BULK	
5340-598-8251	85		5340-664-8894	158	21
5340-598-8895	30	16	5340-664-9959	23	34
5340-598-9689	190		5340-671-5927	12	9
5340-603-0372	96	135	5340-675-1268	118	
5340-614-3595	BULK		5340-677-1783	114L	42
5340-614-4475	44C	11	5340-680-3385	125A	49
5340-616-4796	113E	7	5340-682-1520	106	66
5340-616-4796	123A		5340-682-2119	79A	
5340-616-9545	114F	48	5340-682-4624	132	41
5340-619-3205	92		5340-682-4624	132	42
5340-619-3365	28	29	5340-685-0688	123	
5340-619-7031	BULK		5340-687-3811	125A	86
5340-619-7229	BULK		5340-696-2677	166	3
5340-619-7229	113E	132	5340-696-2678	107	34

STOCK NUMBER	FIGURE NUMBER	ITEM NUMBER	STOCK NUMBER	FIGURE NUMBER	ITEM NUMBER
5340-696-2678	107	50	5340-805-5118	BULK	
5340-697-8465	26	6	5340-806-4635	187	44
5340-698-3435	43	68	5340-806-9748	169	65
5340-698-3435	56		5340-807-5333	21	28
5340-700-9281	30	10	5340-807-5333	21	57
5340-702-4915	118	137	5340-809-9857	28	12
5340-702-4915	118	27	5340-810-1746	66	4
5340-702-4915	118	37	5340-811-2927	169	22
5340-709-8281	70	9	5340-814-9965	100	53
5340-714-6304	125A	32	5340-817-0912	78	
5340-715-1152	107	79	5340-817-0912	79A	
5340-716-8061	35	25	5340-825-6469	169	76
5340-716-8061	49	43	5340-825-9510	119	20
5340-716-8061	124	16	5340-825-9510	119	25
5340-721-8963	178	41	5340-825-9510	119	32
5340-723-2756	144	131	5340-826-5863	131	45
5340-723-2756	145	181	5340-826-5863	132	
5340-723-2843	124	78	5340-826-9783	162	61
5340-726-3009	BULK		5340-827-4069	105	
5340-726-3174	80		5340-828-8079	153	20
5340-726-3174	81		5340-833-7039	BULK	
5340-727-1891	32	196	5340-834-8329	BULK	
5340-727-1891	130	10	5340-834-8330	BULK	
5340-727-1891	147	29	5340-835-5626	79A	
5340-727-1891	BULK		5340-837-9893	114J	
			5340-837-9896	114J	
			5340-837-9897	114J	
			5340-837-9903	114J	
			5340-837-9904	114J	
5340-738-4626	92	1	5340-847-7237	176	45
5340-752-7501	66	5	5340-862-2795	114G	20
5340-753-9419	11D	61	5340-862-2795	114H	22
5340-754-1082	28	14	5340-862-4892	114G	
5340-754-1083	175A	70	5340-862-4911	48	3
5340-754-1591	125A	31	5340-864-3488	114G	36
5340-759-7527	41	72	5340-864-3488	114H	36
5340-768-2747	33	38	5340-864-3488	114J	28
5340-774-4517	175A	99	5340-870-6903	175C	48
5340-781-8061	BULK		5340-871-8782	BULK	
5340-785-5457	50		5340-871-8782	162B	11
5340-790-5203	154		5340-877-5324	188	
5340-796-6165	125A	145	5340-881-2676	BULK	
5340-797-8615	118		5340-888-7376	118	132
5340-801-1169	113F	10	5340-888-7376	118	32
5340-801-1169	123A		5340-888-7376	118	86
5340-801-2500	72	6	5340-909-8729	43	74G
5340-801-4629	57	24	5340-915-0461	107	38
5340-803-5469	181A	61	5340-917-7863	90A	13
5340-803-7301	102	2	5340-917-7863	90A	39
5340-803-7301	107	76	5340-929-1041	50	91
5340-803-7301	107	86	5340-936-9633	154	
5340-803-7303	97	25	5340-936-9633	BULK	
5340-803-7304	185	7	5340-954-6826	215	3
5340-803-7312	BULK		5340-954-6826	BULK	
5340-803-7313	BULK		5340-955-9653	150	98
5340-803-7314	194	11	5340-958-8197	BULK	
5340-803-7320	158	42	5340-964-9153	44B	3
5340-803-7320	BULK		5340-969-6026	113A	26
5340-803-8517	113A	62	5340-984-8395	BULK	
5340-804-2026	84	41	5340-984-8814	50	262
5340-804-2771	34	17	5340-985-0743	117	12
5340-804-2771	149	12	5340-985-0743	117	36
5340-804-2786	34	14	5340-985-0743	117	71
5340-804-2786	149	4	5340-985-0743	118	152
5340-804-3893	21	17	5340-985-0743	118	52
5340-804-3893	34	9	5340-985-0743	118	62
5340-804-3893	149	10	5340-988-6032	BULK	
5340-804-6855	BULK		5340-989-4569	133	4
5340-804-6897	178	35	5340-989-4569	BULK	
5340-804-9740	97	20	5340-989-4570	BULK	
5340-804-9743	79A	36	5340-989-4571	85	42

STOCK NUMBER	FIGURE NUMBER	ITEM NUMBER	STOCK NUMBER	FIGURE NUMBER	ITEM NUMBER
5340-989-4572	BULK		5355-538-6382	113E	36
5340-989-4573	BULK		5355-538-6382	114B	6
5340-989-4574	213A	2	5355-538-6382	114D	6
5340-989-4575	74	78	5355-538-6382	114E	8
5340-989-4575	75	94	5355-538-6382	114G	9
5340-989-4576	136	48	5355-538-6382	114H	10
5340-989-4576	176	60	5355-538-6382	114J	8
5340-989-4576	176	63	5355-538-6382	114L	13
5340-989-4576	176	69	5355-538-6382	114S	3
5340-989-4576	BULK		5355-538-6384	114A	14
5340-989-4577	BULK		5355-538-6384	114C	26
5340-990-7157	BULK		5355-538-6384	114T	6
5340-990-9297	BULK		5355-538-6387	114D	
5340-990-9298	136	12	5355-552-0683	116	21
5340-990-9298	136	16	5355-558-1565	114P	15
5340-990-9298	136	28	5355-567-5956	113E	25
5340-990-9298	136	31	5355-568-5257	19	
5340-990-9298	136	44	5355-579-2896	113	
5340-990-9298	136	49	5355-579-2896	114	
5340-990-9298	136	9	5355-587-3012	47	6A
5340-990-9298	BULK		5355-591-6532	115	102
5340-990-9299	79	143	5355-620-6053	19	2
5340-990-9299	162	4	5355-667-6717	114L	3
5340-990-9299	162	7	5355-667-7455	113C	4
5340-990-9299	BULK		5355-667-9584	114R	10
5340-990-9300	41		5355-668-1912	113A	
5340-990-9300	130	15	5355-668-3444	113A	9
5340-990-9300	130	18	5355-668-4437	113F	26
5340-990-9300	BULK		5355-668-4493	113A	33
5340-990-9301	26		5355-668-5925	113B	11
5340-990-9301	130	48	5355-668-6030	114A	17
5340-990-9301	130	51	5355-668-6030	114C	23
5340-990-9301	213A	1	5355-668-6032	114A	
5340-993-1470	BULK		5355-668-6032	114A	16
5340-993-1474	BULK		5355-668-6032	114C	
5340-993-1475	165	2	5355-668-6388	114P	
5340-993-4849	165	3	5355-697-6027	113F	17
5340-993-5476	176	68	5355-704-7782	114Q	8
5340-993-5478	BULK		5355-857-6220	114L	15
5340-993-6244	77	47	5355-889-7476	114S	6
5340-993-6244	BULK		5355-913-2352	56	
5340-993-6247	BULK		5355-913-2353	56	
5340-993-6248	BULK		5355-994-3275	114R	24
5340-993-6249	BULK		5610-641-0427	MSUP	
5340-993-6250	85	27	5610-641-0429	MSUP	
5340-994-3256	50		5826-092-7509	113E	145
5340-995-8801	79A	57	5826-656-2227	114	
5340-997-6329	114J		5841-675-6493	114A	64
5350-161-9715	MSUP		5841-675-6493	114A	90
5350-192-5049	MSUP		5841-675-6493	114C	
5350-192-5050	MSUP		5841-675-6493	114C	74
5350-224-7201	MSUP		5841-675-6493	114L	61
5350-224-7205	MSUP		5841-675-6493	114L	64
5350-246-0330	MSUP		5905-081-6137	113B	87
5350-286-4851	MSUP		5905-171-1999	113B	38
5355-012-2237	114F	5	5905-171-1999	113B	41
5355-043-1982	114P	14	5905-171-2006	113B	82
5355-043-1982	114Q	7	5905-190-8889	113B	89
5355-096-1429	113E	21	5905-192-0667	113B	79
5355-180-8443	114A	1	5905-195-6761	113B	85
5355-180-8443	114C	39	5905-279-1890	113B	33
5355-284-7526	114G		5905-279-2515	113B	83
5355-326-0695	114A	41	5905-279-2662	113B	88
5355-373-8822	212A	114	5905-279-3504	113B	42
5355-443-3163	BULK		5905-279-3838	113B	44
5355-518-1904	114T	9			
5355-518-4585	130	23	5905-500-8569	130	28
5355-519-4906	114S		5905-502-5821	113B	53
5355-519-9298	113E		5905-572-9167	113B	126
5355-523-3419	113F	12	5905-665-8270	130	27
5355-538-6382	BULK		5905-665-8271	130	25

STOCK NUMBER	FIGURE NUMBER	ITEM NUMBER	STOCK NUMBER	FIGURE NUMBER	ITEM NUMBER
5905-665-8313	130	26	5930-296-5845	129	5
5905-892-6734	130	12	5930-296-5845	129	8
5910-018-0240	44C	47	5930-296-5845	133	12
5910-060-9619	113B	32	5930-296-6242	113	27
5910-060-9619	113B	43	5930-296-6242	114	30
5910-069-6295	113		5930-296-9543	11	10
5910-069-6295	114		5930-305-2750	130	24
5910-373-8808	212A	176	5930-305-2750	44A	13
5910-538-2316	113		5930-327-7563	128	21
5910-538-2316	114		5930-331-1789	128A	123
5910-538-2318	113		5930-501-0395	135	16
5910-538-2318	114		5930-501-0974	123	
5910-544-6692	212A	179	5930-503-1871	104	19
5910-609-7460	113		5930-503-1871	104	51
5910-609-7460	114		5930-503-1871	104	79
5910-615-0328	113B	90	5930-503-1871	104	95
5910-653-6509	123A	29	5930-503-3843	55	100
5910-681-9356	113B	80	5930-504-6855	58	11
5910-862-9334	114G	103	5930-504-6855	67	6
5910-862-9334	114G	93	5930-504-9964	123	95
5910-977-1079	113B	81	5930-518-4790	80	33
5910-977-1085	113B	69	5930-518-4790	81	22
5910-977-1086	113B	31	5930-519-3361	87	
5910-977-1087	113B	86	5930-519-3361	87	11
5915-070-6906	123B	4	5930-536-0781	128A	124
5915-070-6907	123B	7	5930-536-0782	128A	72
5915-212-7970	137	2	5930-536-0783	128A	71
5915-212-7970	137	22	5930-548-5635	87	
5915-212-7970	137	32	5930-548-5635	87	14
5915-325-9375	128	5	5930-548-7513	58	
5915-388-9193	114E	12	5930-556-2492	131	
5915-504-6963	123A	32	5930-556-2492	125A	
5915-652-9095	123A	19	5930-603-8474	85	19
5915-968-4748	128A	169	5930-612-6993	87	
5920-142-7433	138	47	5930-612-6993	87	12
5920-156-4477	130		5930-614-5284	87	
5920-156-4477	138		5930-614-5284	87	10
5920-199-3973	130	66	5930-615-6731	130	69
5920-199-3973	130	67	5930-615-6816	129	4
5920-199-3973	130	70	5930-615-7880	130	42
5920-284-4153	138		5930-615-7880	131	40
5920-284-6787	BULK		5930-615-7880	132	56
5920-557-2391	137		5930-615-7885	130	30
5920-892-9395	137		5930-615-7885	131	17
5925-173-7155	130	57	5930-615-7885	132	24
5925-173-7155	130	59	5930-615-7897	135	7
5925-173-7156	130	54	5930-615-9376	130	33
5925-173-7158	130	53	5930-615-9376	130	46
5925-173-7158	130	56	5930-615-9376	135	15
5925-173-7158	130	62	5930-617-9718	130	36
5925-173-7158	138	11	5930-617-9718	130	41
5925-173-7158	138	28	5930-617-9718	131	41
5925-173-7159	130	55	5930-617-9718	132	55
5925-173-7159	130	61	5930-617-9718	BULK	
5925-258-9715	130		5930-621-2206	87	
5925-271-8659	130	60	5930-621-2206	87	13
5925-271-8820	130	58	5930-631-0029	123	86
5925-674-4257	175	11	5930-636-2286	130	
5925-810-8601	BULK		5930-636-2286	130	
5930-057-1875	131	15	5930-636-2682	133	10
5930-057-1875	132	23	5930-636-2682	BULK	
5930-063-6813	BULK		5930-636-4345	131	42A
5930-201-3288	33	33	5930-636-4345	125A	68
5930-201-3288	147	23	5930-636-4345	125A	75
5930-201-3288	148	33	5930-639-0662	131	
5930-258-4624	131	3	5930-639-0662	131	11
5930-258-4624	132	29	5930-639-0662	132	27
5930-259-4662	138	5	5930-642-9414	123	93
5930-259-4662	139	5	5930-646-4619	128A	70
5930-272-1305	123	97	5930-654-1537	123	
5930-296-5771	123	91	5930-655-1513	130	

STOCK NUMBER	FIGURE NUMBER	ITEM NUMBER	STOCK NUMBER	FIGURE NUMBER	ITEM NUMBER
5930-655-1513	130	29	5935-549-4690	138	24
5930-655-1513	130	40	5935-552-4682	79	32
5930-655-1513	131	35	5935-552-4682	79	44
5930-655-1513	132	49	5935-552-4682	80	38
5930-655-1513	133	5	5935-552-4682	81	27
5930-655-1513	133	9	5935-552-4822	137	
5930-655-1513	BULK		5935-552-4822	137	12
5930-655-1514	113	2	5935-552-4822	137	19
5930-655-1514	114	14	5935-552-4822	137	25
5930-655-1514	130	32	5935-552-4822	137	29
5930-655-1514	130	34	5935-552-4822	137	36
5930-655-1514	130	38	5935-552-6697	137	
5930-655-1514	130	45	5935-553-2095	137	13
5930-655-1514	131	14	5935-553-2095	137	20
5930-655-1514	131	36	5935-553-2095	137	30
5930-655-1514	131	8	5935-553-2602	137	
5930-655-1514	132	20	5935-555-1868	137	
5930-655-1514	132	50	5935-555-1868	137	5
5930-655-1514	135	8	5935-557-2162	137	
5930-655-1514	135	9	5935-578-2640	137	
5930-655-1515	BULK		5935-581-3085	213A	4
5930-655-1516	130	39	5935-583-2172	131	
5930-655-1516	131		5935-604-3244	137	
5930-655-1518	131	39	5935-627-0364	109	
5930-655-1518	132	57	5935-627-0366	79	34
5930-655-1520	130	37	5935-627-0366	80	40
5930-655-1520	135	18	5935-627-0366	81	29
5930-655-1522	135	14	5935-651-1604	128	19
5930-655-1575	131	26	5935-651-1607	131	
5930-655-1575	132	12	5935-659-6569	137	8
5930-655-1575	BULK		5935-660-4296	BULK	
5930-655-1579	BULK		5935-695-4263	123A	14
5930-655-1582	130	31	5935-695-4264	123A	36
5930-694-1733	135	6	5935-704-1482	213A	8
5930-703-0420	87		5935-725-4583	BULK	
5930-731-8905	129	2	5935-725-6618	BULK	
5930-815-9908	44C	19	5935-725-6633	BULK	
5930-833-5123	58	8	5935-725-8233	BULK	
5930-833-5123	67	7	5935-726-0686	BULK	
5935-015-0499	79	33	5935-726-0708	44C	27
5935-015-0499	80	39	5935-726-0708	113E	12
5935-015-0499	81	28	5935-726-0708	114J	33
5935-018-5343	137		5935-726-0708	123A	9
5935-018-5343	137	16	5935-754-8711	85	
5935-018-5347	137		5935-755-3144	87	15
5935-028-0142	136	24	5935-755-3144	87	32
5935-028-0143	136	2	5935-755-3152	76	
5935-049-4551	114P		5935-755-3624	BULK	
5935-147-5406	214A	171	5935-755-3688	212A	27
5935-201-2721	90A	46	5935-768-3864	137	
5935-257-8321	140		5935-805-3286	BULK	
5935-257-8321	141	6	5935-805-4989	180	
5935-257-8321	BULK		5935-805-4991	180	4
5935-259-4977	114P	24	5935-805-4991	BULK	
5935-280-1956	130	5	5935-807-8001	BULK	
5935-280-2195	122	1	5935-818-3091	BULK	
5935-283-1472	135	1	5935-819-6056	BULK	
5935-283-1472	135	4	5935-820-0555	137	
5935-370-9638	212A	22	5935-823-0487	BULK	
5935-396-0068	122	4	5935-846-2329	BULK	
5935-502-3768	123A		5935-849-3867	180	1
5935-502-3784	123A	41	5935-849-4268	139	46
5935-504-4028	BULK		5935-855-0020	BULK	
5935-533-9647	113		5935-878-2754	25	
5935-533-9647	114		5935-879-0138	138	53
5935-539-0877	113B	58	5935-888-7405	140	16
5935-539-2651	125	23	5935-888-7405	141	28
5935-539-3740	79	31	5935-888-7405	BULK	
5935-539-3740	79	43	5935-951-0151	137	
5935-539-3740	80	37	5935-951-0171	135	
5935-539-3740	81	26	5935-957-2338	212A	30

STOCK NUMBER	FIGURE NUMBER	ITEM NUMBER	STOCK NUMBER	FIGURE NUMBER	ITEM NUMBER
5935-957-2338	212A	54	5940-907-5939	BULK	
5940-018-0244	44C	46	5940-950-1610	131	
5940-033-2483	212A	170	5940-950-1610	132	
5940-081-6055	BULK		5940-950-1610	132	
5940-082-4642	BULK		5940-950-1610	132	6
5940-194-4199	140		5940-950-1610	139	16
5940-204-8961	BULK		5940-950-1610	BULK	
5940-204-8990	BULK		5940-950-7783	BULK	
5940-204-9141	BULK		5945-095-1993	35A	1
5940-204-9142	123B	10	5945-225-8692	75	
5940-230-0515	BULK		5945-225-8692	BULK	
5940-230-0515	113B	52	5945-237-1348	130	7B
5940-257-5677	113F	79	5945-237-1348	132	144
5940-257-5677	113F	84	5945-237-1348	138	27
5940-271-4032	113B	73	5945-257-0316	138	22
5940-271-4032	113B	99	5945-257-0319	138	
5940-272-1813	175A	107	5945-257-0319	138	52
5940-283-5280	75		5945-257-0319	139	47
5940-283-5280	BULK		5945-258-2780	138	62
5940-283-5404	212A	69	5945-258-3257	138	44
5940-329-5800	123B	11	5945-258-3424	130	7
5940-329-5800	123B	17	5945-259-5569	138	41
5940-342-0997	212A	159	5945-259-5569	139	33
5940-345-1276	BULK		5945-295-6765	132	146
5940-370-9717	212A		5945-484-9693	214A	189
5940-370-9717	212A	32	5945-500-6693	128A	20
5940-370-9717	212A	50	5945-501-9716	123A	28
5940-370-9717	212A	88	5945-502-4095	123A	
5940-439-8892	128A	176	5945-507-9730	123A	25
5940-446-2856	128A	3	5945-642-4460	115	55
5940-500-9759	114G	94	5945-643-6551	130	7A
5940-500-9759	114H	88	5945-660-9315	129	24
5940-500-9759	114J	73	5945-660-9315	138	21
5940-502-3744	175A	119	5945-686-6877	138	51
5940-502-7570	BULK		5945-686-6877	139	48
5940-503-9995	137		5945-699-9797	138	43
5940-503-9995	137		5945-699-9797	139	35
5940-503-9995	137	26	5950-093-7494	130	14
5940-503-9995	137	6	5950-093-7494	130	17
5940-503-9995	79A	64	5950-093-7494	130	47
5940-503-9995	125A		5950-093-7494	130	50
5940-504-3543	BULK		5950-204-5886	123B	32
5940-512-2917	175A	118	5950-519-4726	113B	26
5940-518-8532	113B	56	5950-519-8817	113B	76
5940-534-0973	BULK		5950-566-6737	113B	27
5940-546-6741	128A	177	5950-625-9456	132	106B
			5950-625-9456	138	49
5940-557-4340	BULK		5960-262-0132	113B	2
5940-577-3711	BULK		5960-280-5585	113B	3
5940-600-1226	114E		5960-556-9685	113B	1
5940-600-1226	114F	108	5970-045-1948	128A	136
5940-600-6258	138	8	5970-060-8011	114F	82
5940-600-6258	139	12	5970-098-9754	113F	78
5940-600-6258	139	15	5970-098-9754	113F	83
5940-623-7228	139	13	5970-148-4701	214A	186
5940-642-1377	BULK		5970-159-1598	MSUP	
			5970-235-2719	BULK	
5940-644-8713	11D		5970-235-2721	BULK	
5940-644-8713	BULK		5970-235-2728	140	
5940-660-3634	BULK		5970-284-8070	BULK	
5940-660-3634	123B	12	5970-284-8410	MSUP	
5940-686-5100	138	9	5970-284-8468	138	60
5940-686-7616	BULK		5970-284-8468	139	51
5940-723-3302	114H	40	5970-284-8468	BULK	
5940-723-3302	114J	32	5970-284-9698	BULK	
5940-825-7865	132	107	5970-306-4634	114E	16
5940-862-9332	114G	87	5970-306-4634	114E	99
5940-862-9332	114G	97	5970-306-4634	114F	43
5940-877-9111	BULK		5970-306-4634	114F	54
5940-892-3111	140		5970-310-2346	128A	181
5940-892-3111	BULK		5970-311-0659	114R	69

STOCK NUMBER	FIGURE NUMBER	ITEM NUMBER	STOCK NUMBER	FIGURE NUMBER	ITEM NUMBER
5970-311-0889	214A	178	5990-564-9442	114R	54
5970-329-0405	114E	86	5995-769-3461	141	9
5970-329-0405	114F	102	5995-769-3462	141	7
5970-341-9933	44C	7	5995-980-1927	81A	67
5970-343-2955	213		5999-049-3986	114E	64
5970-373-8811	212A	136	5999-049-3986	114F	110
5970-485-0450	214A	187	5999-119-5011	113E	249
5970-487-6872	113E	284	5999-254-5669	213A	7
5970-503-3224	113B	36	5999-655-4263	123A	7
5970-518-3270	113B	57	6105-035-4926	123B	51
5970-556-2717	BULK		6105-093-7411	90A	23
5970-557-6254	BULK		6105-096-1332	113E	154
5970-644-3167	MSUP		6105-096-1465	113E	282
5970-733-8599	175D	55	6105-096-1476	113E	144
5970-774-4526	175A	108	6105-098-5275	113F	255
5970-798-3757	128A	17	6105-141-8184	128A	167
5970-798-9090	128A	125	6105-196-0058	76	
5970-799-6225	128A	175	6105-220-9045	175A	94
5970-799-6225	128A	182	6105-305-6771	123B	34
5970-811-9461	87	16	6105-307-5901	44C	12
5970-935-4925	114F	42	6105-307-5902	44C	10
5970-994-3292	79A	70	6105-307-5903	44C	9
5970-994-3292	81A	50	6105-308-3915	44C	38
5975-030-2013	212A	160	6105-328-1689	44C	26
5975-030-2013	212A	171	6105-332-7864	44C	3
5975-030-2013	212A	33	6105-337-4439	123B	55
5975-030-2013	212A	89	6105-373-3526	41	64
5975-214-1534	114D		6105-373-3526	44A	12
5975-240-2646	132	44	6105-373-3526	44C	
5975-295-9672	212A		6105-500-2349	41	66
5975-295-9672	212A	53	6105-506-7842	44C	14
5975-295-9673	212A	37	6105-510-2514	44C	
5975-295-9673	212A	51	6105-511-0289	81A	55
5975-295-9674	212A		6105-519-0866	81A	
5975-295-9674	212A	52	6105-519-0866	81A	22
5975-296-9941	175A	109	6105-519-1828	128A	112
5975-591-0562	180	5	6105-519-1836	114R	73
5975-609-3075	128	20	6105-536-0862	79A	
5975-624-8559	129	30	6105-536-0862	81A	53
5975-627-0351	213		6105-545-5627	114F	
5975-992-0595	129	31	6105-547-3369	44C	45
5977-037-8373	11D		6105-557-3218	114E	63
5977-056-4898	113A	48	6105-557-3218	114F	
5977-056-4898	114R	34	6105-635-0668	123B	49
5977-142-6828	175A	95	6105-635-5508	123B	23
5977-214-1260	11D	6	6105-635-5878	128A	
5977-217-0602	123B	54	6105-635-5879	128A	
5977-238-6852	128A	183	6105-635-6605	76	10A
5977-263-0697	175A	18	6105-635-7281	44C	
5977-284-7640	123B	35	6105-671-7437	79A	62
5977-285-0954	123B	38	6105-671-7471	79A	39
5977-306-5065	113F	117	6105-685-0085	90A	30
5977-322-2839	113A	78	6105-767-8373	81A	59
5977-322-2839	114R	63	6105-767-8375	81A	62
5977-322-2840	113A	79	6105-804-5992	113E	
5977-322-2840	114R	62	6105-807-0296	128A	76
5977-338-3588	79A	72	6105-862-5788	44C	23
5977-338-3589	79A		6105-875-7984	44C	
5977-373-8812	212A	135	6105-876-2433	79A	60
5977-373-8840	212A	186	6105-960-4078	113B	105
5977-441-8293	175D		6105-980-1928	81A	72
5977-503-2300	44C	32	6110-099-0114	139	30
5977-557-5116	113F	80	6110-256-3150	138	
5977-673-8354	79A		6110-256-3150	139	
5977-698-2057	44C	34	6110-305-1202	BULK	
5977-733-8595	175D	64	6110-327-9825	138	
5977-733-8603	175D	34	6110-327-9825	139	
5977-767-8376	81A	40	6110-337-7975	138	
5977-980-1924	81A		6110-337-7975	139	
5977-980-1925	81A	49	6110-337-8037	138	
5990-564-9442	113A	71	6110-337-8037	139	

STOCK NUMBER	FIGURE NUMBER	ITEM NUMBER	STOCK NUMBER	FIGURE NUMBER	ITEM NUMBER
6110-373-8691	138		6115-809-0187	11	
6110-373-8691	139		6115-827-6589	11	
6110-390-8104	138		6115-927-7394	11	20
6110-390-8104	139		6115-969-9232	11	
6110-390-8115	138		6125-166-2605	175A	21
6110-390-8115	139		6125-557-7225	138	48
6110-483-8928	138	38	6125-616-5731	113E	
6110-512-6786	138		6125-669-5968	132	106D
6110-512-6786	139		6125-669-5968	138	
6110-613-9764	135	19	6130-519-2608	113B	92
6110-613-9765	135		6140-248-6148	140	17
6110-613-9919	139	28	6140-248-6148	141	29
6110-614-1806	KITS		6140-308-1315	140	2
6110-631-4589	138		6140-308-1315	140	7
6110-631-4589	139		6140-308-1315	141	4
6110-635-6316	138		6140-321-2281	140	14
6110-635-6316	139		6140-321-2281	141	26
6110-635-9636	138		6140-321-2281	141	35
6110-635-9636	139		6140-333-8979	140	18
6110-651-8883	138		6140-345-9636	140	19
6110-651-8883	139		6140-345-9636	141	32
6110-652-5275	KITS		6140-613-9811	132	95
6110-733-6003	138		6140-621-0173	141	
6110-733-6003	139		6140-681-8562	140	
6110-765-8740	138		6140-681-8562	141	1
6110-765-8740	139		6140-711-5437	141	31
6110-765-8740	KITS		6145-174-4483	212A	34
6110-772-7855	KITS		6145-174-4483	212A	38
6110-775-3923	KITS		6145-174-4483	213A	10
6110-775-7480	KITS		6145-174-4483	213B	9
6110-784-4008	KITS		6145-191-1529	BULK	
6110-842-6376	138	37	6145-236-9503	BULK	
6110-842-6376	139	29	6145-284-0657	BULK	
6110-973-0416	138		6145-542-6092	BULK	
6110-973-0416	139		6145-578-6595	BULK	
6115-200-1390	175A	47	6145-578-6596	140	
6115-203-8987	11		6145-578-6596	BULK	
6115-203-8987	11D		6145-578-6597	BULK	
6115-241-2387	11		6145-578-6602	BULK	
6115-250-5427	11		6145-578-6604	BULK	
6115-250-5428	11		6145-578-6605	BULK	
6115-284-1068	11D	62	6145-578-6606	BULK	
6115-288-2811	11		6145-578-7513	BULK	
6115-288-2811	11D		6145-578-7514	BULK	
6115-288-2970	11		6145-851-8505	137	
6115-327-9648	11		6145-851-8505	BULK	
6115-345-5471	11D	1	6145-904-2463	BULK	
6115-391-7840	11		6145-993-5490	BULK	
6115-504-2972	11		6150-091-6617	175A	37
6115-510-8034	11		6150-370-9709	212A	73
6115-523-0186	11		6150-547-5387	44C	
6115-523-0204	11		6150-635-0397	212A	70
6115-523-5594	11		6150-635-8335	123B	36
6115-549-3418	11D	51	6150-635-9083	44C	
6115-556-8894	11		6150-642-1267	82	16
6115-557-3752	11		6150-642-1267	155	15
6115-557-3756	11		6150-642-1267	155	36
6115-558-6491	11		6150-815-5125	77	129
6115-578-6492	11		6150-815-5125	77	131
6115-627-6805	11		6150-868-7026	138	
6115-627-6805	KITS		6210-025-7714	113	3
6115-635-8599	11		6210-025-7714	114	19
6115-635-8615	11		6210-025-7714	114	38
6115-635-8617	11		6210-025-7716	114	
6115-635-8617	11D				
6115-643-4937	11		6210-212-7889	114	26
6115-643-4937	11D		6210-229-5188	113	7
6115-643-4942	11		6210-229-5188	114	10
6115-665-8842	11		6210-283-9250	113	
6115-775-7946	11		6210-283-9250	114	
6115-808-4842	11		6210-283-9878	113	10

STOCK NUMBER	FIGURE NUMBER	ITEM NUMBER	STOCK NUMBER	FIGURE NUMBER	ITEM NUMBER
6210-283-9878	114	13	6220-283-9767	128	24
6210-283-9878	114	39	6220-283-9767	128A	
6210-284-0289	114	16	6220-295-0897	11	44
6210-284-0289	131	29	6220-295-0897	132	88
6210-284-0289	132	15	6220-299-4104	135	17A
6210-504-0167	113	17	6220-299-4104	BULK	
6210-504-0167	114	20	6220-299-4759	138	2
6210-519-0448	113	26	6220-299-4759	138	4
6210-519-0448	113	28	6220-299-4759	139	2
6210-519-0448	114	32	6220-299-4759	139	4
6210-519-0448	131	18	6220-299-4759	150	
6210-519-0448	131	9	6220-299-6693	138	1
6210-519-0448	132	21	6220-299-6693	139	1
6210-519-0448	135	10	6220-299-7136	130	71
6210-519-2155	11	43	6220-299-7136	131	46
6210-519-2653	113		6220-299-7136	132	70
6210-519-2653	113	6	6220-299-7136	138	6
6210-519-2653	114		6220-299-7136	139	6
6210-519-2653	114	9	6220-299-7140	150	7
6210-519-2653	130	22	6220-326-5587	128A	84
6210-519-2653	131	27	6220-326-5588	128A	145
6210-519-2653	132	13	6220-326-5590	128A	
6210-519-2653	135	12	6220-326-5591	128A	79
6210-519-2653	BULK		6220-326-5594	128A	94
6210-635-4361	113	8	6220-326-5595	128A	120
6210-635-4700	131		6220-446-2889	128A	87
6210-909-7032	113F		6220-475-0217	154	
6220-025-7724	114	11	6220-484-0924	BULK	
6220-025-7724	114	36	6220-497-2213	134	
6220-064-6298	154	11D	6220-500-0736	154	
6220-064-6299	154	11C	6220-500-1877	154	
6220-064-6300	154	11B	6220-502-0746	128A	133
6220-141-8514	128A	82	6220-504-2021	134	15
6220-151-7536	134	4	6220-506-1300	128A	60
6220-166-9786	129	14	6220-506-1301	128A	6
6220-166-9786	134	10	6220-506-1302	128A	59
6220-189-4797	138	3	6220-520-2600	128A	117
6220-189-4797	139	3	6220-520-2603	128A	51
6220-189-4797	150	4	6220-523-9406	128A	149
6220-204-2512	128A	143	6220-524-6444	128A	8
6220-204-2804	128A	85	6220-524-6446	128A	46
6220-226-9259	113		6220-524-6447	128A	42
6220-226-9259	114		6220-548-0313	129	
6220-226-9259	BULK		6220-548-0313	134	12
6220-243-8138	113	12	6220-548-0313	154	5
6220-243-8138	113	14	6220-557-8861	154	7
6220-243-8138	113	15	6220-572-3787	154	
6220-243-8138	113	29	6220-572-3788	154	
6220-243-8138	113	30	6220-624-0509	128A	16
6220-243-8138	113	4	6220-627-0370	154	
6220-243-8138	113	5	6220-672-1607	128A	1
6220-243-8138	113	9	6220-688-5053	129	
6220-243-8138	114		6220-691-1189	154	
6220-243-8138	114	1	6220-711-1959	154	
6220-243-8138	114	12	6220-780-6448	128A	107
6220-243-8138	114	17	6220-783-6178	154	
6220-243-8138	114	18	6220-783-6855	154	
6220-243-8138	114	2	6220-801-3871	129	
6220-243-8138	114	43	6220-803-4610	154	
6220-243-8138	114	44	6220-830-4685	128A	63
6220-243-8138	114	46	6220-830-4688	128A	90
6220-243-8138	114	47	6220-863-3879	128A	184
6220-243-8138	114	5	6220-882-1647	154	
6220-243-8138	114	6	6220-896-6239	128A	23
6220-283-9337	129		6220-896-6314	128A	164
6220-283-9337	134	1	6220-896-6319	128A	165
6220-283-9364	129	10	6220-896-6327	128A	161
6220-283-9364	134	6	6220-963-9359	154	10
6220-283-9732	130		6220-980-7290	128A	111
6220-283-9732	131		6220-980-7291	128A	139
6220-283-9732	132		6220-980-7292	128A	129

STOCK NUMBER	FIGURE NUMBER	ITEM NUMBER	STOCK NUMBER	FIGURE NUMBER	ITEM NUMBER
6220-980-7293	128A	128	6340-349-2988	136	1
6220-980-7294	128A	140	6340-349-2988	136	23
6220-980-7295	128A	73	6340-349-2989	136	22
6220-980-7296	128A	69	6340-349-2989	136	52
6220-980-7297	128A	68	6340-373-3878	138	40
6220-980-7298	128A	64	6340-373-3878	139	32
6220-980-7299	128A	65	6340-593-9849	138	39
6220-980-7301	128A	4	6340-593-9849	139	31
6220-988-5310	130	20	6350-390-6376	136	11
6220-988-5310	130	35	6350-390-6376	136	14
6220-988-5310	131	59	6350-390-6376	136	18
6220-988-5310	132	83	6350-390-6376	136	30
6240-141-6143	154		6350-390-6376	136	33
6240-155-7784	130	73	6350-390-6376	136	46
6240-155-7784	131	48	6350-390-6376	136	51
6240-155-7784	132	72	6350-653-5729	131	94
6240-155-7784	134	16	6350-653-5729	132	85
6240-155-7784	138		6545-919-6650	115	45
6240-155-7784	139		6605-092-7371	113E	164
6240-155-7784	154	8	6605-180-8893	114S	110
6240-155-7836	130		6605-181-6202	113E	
6240-155-7836	130	16	6605-188-9025	113	
6240-155-7836	130	49	6605-188-9025	114	
6240-155-7836	131	19	6605-188-9025	113A	
6240-155-7836	131	28	6605-221-1352	109	
6240-155-7836	131	30	6605-239-8209	109	
6240-155-7836	132	14	6605-239-8210	109	
6240-155-7836	132	16	6605-308-2536	113A	21
6240-155-7836	132	22	6605-308-2538	114R	72
6240-155-7836	135	13	6605-310-2042	113A	44
6240-155-7932	130	74	6605-310-2042	114R	30
6240-155-7932	131	49	6605-321-3722	114R	21
6240-155-7932	132	73	6605-329-0800	113A	46
6240-155-7932	138		6605-329-0800	114R	32
6240-155-7932	139		6605-329-0817	114R	4
6240-155-8714	113		6605-329-0829	114R	45
6240-155-8714	114	33	6605-337-5665	114R	74
6240-155-8714	129	15	6605-337-5668	114R	18
6240-155-8714	131		6605-342-9858	114R	65
6240-155-8714	132	87	6605-348-5744	109	
6240-155-8714	134	11	6605-398-0578	113A	45
6240-155-8714	135		6605-398-0578	114R	31
6240-155-8714	135	11	6605-398-0593	113A	23
6240-155-8714	138		6605-398-0609	113A	22
6240-155-8714	139		6605-398-0658	114R	68
6240-155-8714	150	6	6605-398-0665	113A	3
6240-155-8714	150	9	6605-398-0666	113A	6
6240-155-8714	BULK		6605-487-4769	109	
6240-178-9935	BULK		6605-487-4774	109	
6240-196-4518	138	55	6605-513-5800	114R	15
6240-196-4518	139	39	6605-514-3654	114	
6240-295-1617	130	19	6605-514-3658	114	
6240-295-1617	130	52	6605-514-3670	114	
6240-299-4742	113		6605-514-3851	109	
6240-299-4742	114		6605-515-6459	114	
6240-557-3065	128A	11	6605-515-6459	114R	
6240-564-1084	154		6605-526-7251	109	
6240-564-1084	154		6605-526-7252	109	
6240-564-1084	BULK		6605-526-7253	109	
6240-592-1006	154		6605-528-1495	113A	67
6240-681-8366	134	5	6605-528-1495	114R	8
6340-093-8197	138		6605-528-8334	113A	15
6340-300-3617	136	19	6605-528-8334	114R	13
6340-300-3617	136	36	6605-532-2185	113A	47
6340-300-3617	136	5	6605-532-2185	114R	33
6340-300-3617	136	56	6605-536-5239	114R	22
6340-340-1801	136	25	6605-551-8187	109	6
6340-340-1801	136	3	6605-557-0327	109	
6340-340-1801	136	34	6605-557-0333	109	
6340-340-1801	136	54	6605-557-0348	114	48A
6340-340-1801	136	7	6605-557-5673	109	

STOCK NUMBER	FIGURE NUMBER	ITEM NUMBER	STOCK NUMBER	FIGURE NUMBER	ITEM NUMBER
6605-565-9880	113A	73	6610-050-6337	114D	
6605-565-9880	114R	56	6610-053-1731	114D	36
6605-576-3888	114L		6610-053-1734	114D	
6605-576-3889	114L		6610-054-8824	114D	
6605-582-7316	114L		6610-054-8825	114D	
6605-582-7317	114L	22	6610-056-0532	114S	
6605-584-4227	109	11	6610-059-6356	114D	108
6605-584-4227	113	1	6610-070-1182	114L	71
6605-584-4227	114	15	6610-070-1183	114L	85
6605-584-4227	114	35	6610-070-1184	114L	19
6605-584-4227	114	37	6610-070-1185	114L	17
6605-621-1343	113A	19	6610-074-2092	114T	
6605-662-9182	113A	30	6610-084-1611	114S	93
6605-662-9188	113A	29	6610-084-1613	114S	11
6605-662-9189	113A	16	6610-089-6950	113	
6605-663-5619	109		6610-089-6950	114	17
6605-663-8523	109		6610-091-7129	113E	137
6605-663-8526	109		6610-091-7158	113E	143
6605-674-7127	109		6610-091-7159	113E	139
6605-698-5854	109	30	6610-091-7304	113F	173
6605-768-9615	113A	11	6610-091-7311	113F	183
6605-768-9665	113A		6610-091-7315	113F	174
6605-857-9978	109		6610-091-7325	113F	
6605-861-4002	113A	2	6610-095-8261	114A	25
6605-861-4003	113A	32	6610-095-8261	114C	15
6605-861-4006	113A	17	6610-095-8779	BULK	
6605-875-1497	113E	263	6610-095-8779	113E	113
6605-875-1498	113E	267	6610-095-9628	114S	69
6610-019-5404	114D		6610-095-9655	114S	101
6610-019-5405	114D		6610-095-9931	114S	70
6610-019-5407	114D	8	6610-095-9938	114S	112
6610-019-5411	114D		6610-095-9944	114S	47
6610-019-5442	114B	21	6610-096-0110	113E	16
6610-019-5447	114B		6610-096-0373	114S	80
6610-019-5449	114B		6610-096-0525	114S	83
6610-019-5450	114B		6610-096-1286	113E	61
6610-019-5451	114B		6610-096-1287	113E	
6610-019-5452	114B		6610-096-1297	113E	64
6610-019-5453	114B	14	6610-096-1380	113E	26
6610-019-5467	114T	40	6610-096-1463	113E	115
6610-019-5468	114T	22	6610-096-1496	113E	183
6610-019-5471	114T	33	6610-096-1511	113E	112
6610-019-5473	114B	43	6610-097-5147	114E	
6610-019-5473	114D	46	6610-098-5329	113E	
6610-019-5474	114D		6610-098-5340	113E	
6610-019-5475	114D		6610-098-5341	113E	
6610-019-5476	114D		6610-099-0151	113F	33
6610-019-5477	114D		6610-099-0152	113F	34
6610-019-5503	114B		6610-099-0154	113F	
6610-019-5503	114D		6610-099-0156	113F	
6610-019-5504	114B	17	6610-141-3577	114A	15
6610-019-5515	114L	56	6610-141-3577	114C	25
6610-028-2221	114A	86	6610-141-7000	114L	11
6610-028-2221	114C	61	6610-144-4406	114S	66
6610-032-0264	113F	204	6610-144-4625	114B	77
6610-034-3704	114C		6610-144-4625	114D	84
6610-034-3706	114A	19	6610-144-4759	114C	66
6610-034-3706	114C	21	6610-166-6790	114S	71
6610-034-3707	114C	4	6610-166-6884	114S	7
6610-034-3708	114C		6610-166-7078	114G	116
6610-034-3709	114C		6610-166-7078	114H	111
6610-049-3988	114E		6610-166-7078	114J	96
6610-049-3988	114E	105	6610-167-0924	114S	15
6610-049-3988	114F	45	6610-167-0924	114S	57
6610-049-3989	114E	37	6610-167-2849	114S	89
6610-049-3989	114G		6610-167-2863	114S	100
6610-049-3989	114H		6610-167-3786	114G	110
6610-049-3989	114J		6610-167-3786	114H	106
6610-049-3994	114E	44	6610-167-3786	114J	91
6610-049-5103	114A		6610-176-3019	114C	70
6610-049-5128	114A		6610-176-5373	114S	85

STOCK NUMBER	FIGURE NUMBER	ITEM NUMBER	STOCK NUMBER	FIGURE NUMBER	ITEM NUMBER
6610-176-5438	114H	114	6610-315-8757	114D	109
6610-176-5438	114J	99	6610-317-1942	113F	164
6610-176-5471	114S	107	6610-319-4011	114D	17
6610-180-8542	114S	109	6610-319-4015	114D	16
6610-180-8601	114S	108	6610-321-3414	114D	
6610-180-8895	114S	73	6610-321-3462	113E	191
6610-181-4271	114B	30	6610-321-3468	113E	114
6610-181-4271	114D	32	6610-321-3469	113E	69
6610-181-4577	114S	16	6610-321-3496	113F	187
6610-181-4580	114S	77	6610-329-0370	113E	20
6610-181-4584	114S	76	6610-329-0370	113E	9
6610-181-5489	114S	35	6610-329-0376	113E	56
6610-181-6248	114S	94	6610-329-0380	113E	188
6610-181-7544	114S	58	6610-329-0380	113E	193
6610-190-1393	113		6610-329-0381	113E	47
6610-190-1393	114		6610-329-0386	113F	202
6610-190-1399	113		6610-333-8121	114E	7
6610-190-1399	114		6610-334-6862	114B	79
6610-190-1399	114D		6610-334-6862	114D	86
6610-190-1414	113		6610-334-6870	114D	34
6610-190-1414	114S		6610-335-6083	114E	31
6610-190-1415	113		6610-337-5423	113E	136
6610-190-1415	114		6610-337-5452	113F	49
6610-190-1425	113		6610-337-5464	114E	98
6610-190-1425	114		6610-337-5468	114E	40
6610-190-1425	114D		6610-337-5472	114E	27
6610-190-1426	113		6610-337-5472	114F	25
6610-190-1426	114		6610-337-5476	114E	25
6610-190-1428	113		6610-337-5477	114E	23
6610-190-1428	114		6610-346-4250	113F	
6610-190-1428	114S		6610-346-4252	113F	86
6610-211-8989	113E	149	6610-346-4254	113F	157
6610-213-8544	114H		6610-346-4258	113F	133
6610-222-8957	113		6610-346-4260	113F	5
6610-222-8957	114		6610-347-2101	113F	144
6610-222-8957	114S		6610-347-2102	113F	138
6610-224-1278	114		6610-347-2103	113F	140
6610-224-1278	114C		6610-347-2104	113F	119
6610-224-1284	114		6610-347-2105	113F	
6610-225-0254	114A		6610-349-6310	114D	75
6610-232-9473	114		6610-349-6414	114B	42
6610-232-9475	114		6610-349-6414	114D	44
6610-232-9483	114		6610-371-0704	114A	52
6610-232-9485	114		6610-371-0704	114C	85
6610-232-9485	114C		6610-371-0704	114L	32
6610-247-9350	113		6610-371-0857	114D	13
6610-247-9350	114		6610-371-0861	114D	14
6610-247-9350	114G		6610-371-0866	114D	
6610-251-0366	114		6610-371-0932	114D	22
6610-251-0366	114A		6610-371-1506	114G	8
6610-251-0367	114		6610-371-1506	114H	9
6610-251-0369	114		6610-371-1506	114J	7
6610-251-0374	114		6610-371-1725	113F	224
6610-255-2713	113		6610-373-9410	114G	
6610-255-2713	114		6610-373-9414	114G	2
6610-287-4709	114A		6610-373-9414	114H	3
6610-298-0169	113E		6610-373-9415	114G	38
6610-298-0170	113E		6610-373-9438	114G	119
6610-303-0298	114B		6610-373-9438	114G	48
6610-303-0298	114D		6610-373-9438	114H	49
6610-303-0335	113F	241	6610-373-9438	114J	36
6610-303-9583	113E	126	6610-388-0030	114	
6610-303-9585	113E	124	6610-388-0030	114A	
6610-303-9943	113F	95	6610-388-0048	113	
6610-303-9944	113F	85	6610-388-0048	114	
6610-304-6948	113E	133	6610-388-0048	113E	
6610-308-2481	113F	27	6610-388-0049	113	
6610-308-2502	114F	4	6610-388-0049	114	
6610-308-6554	114F	10	6610-388-0049	113E	
6610-315-8757	114A	69	6610-388-0068	113	
6610-315-8757	114C	50	6610-388-0068	114	

STOCK NUMBER	FIGURE NUMBER	ITEM NUMBER	STOCK NUMBER	FIGURE NUMBER	ITEM NUMBER
6610-388-0068	114E		6610-526-4709	113	
6610-388-9188	114E	24	6610-526-4709	114	
6610-388-9189	114E	47	6610-526-4716	113	
6610-390-8441	113		6610-526-4716	114	
6610-390-8441	114		6610-526-4716	114G	
6610-390-8441	113E		6610-526-4717	113	
6610-397-9847	114C		6610-526-4717	114	
6610-397-9917	113E	62	6610-526-4717	113E	
6610-397-9918	113E	71	6610-526-4785	114	
6610-397-9943	113E	186	6610-526-4786	114	
6610-397-9945	113E	222	6610-526-4786	114A	
6610-398-0058	114E	94	6610-526-4791	114	
6610-398-0058	114F	37	6610-526-4791	114C	
6610-398-0059	113		6610-526-4911	113F	3
6610-398-0059	114		6610-526-5761	114	
6610-398-0059	114E		6610-526-5913	113	
6610-443-8910	114A	27	6610-526-5913	114	
6610-443-8910	114C	13	6610-526-6053	114	
6610-448-6414	114T	47	6610-526-6053	114A	
6610-487-4090	113		6610-526-6054	114	
6610-487-4094	114		6610-526-6054	114A	
6610-487-4101	114		6610-526-6055	114	
6610-487-5590	114A	46	6610-526-6056	114	
6610-487-5590	114C	89	6610-526-6066	114	
6610-487-6408	114S	72	6610-526-6066	114A	
6610-487-7221	114S	25	6610-526-6067	114	
6610-487-7314	114S	36	6610-526-6067	114A	
6610-504-5158	113F	76	6610-526-6068	114	
6610-505-3913	114A	21	6610-526-6068	114C	
6610-505-3913	114C	17	6610-526-6075	114	
6610-506-0076	114T	8	6610-526-6076	114	
6610-506-1869	113E	280	6610-526-6078	114	
6610-509-5167	114G	22	6610-526-6079	114	
6610-509-5167	114H	24	6610-526-6079	114C	
6610-509-5167	114J	18	6610-526-6080	114	
6610-510-2906	114S	86	6610-526-6081	114	
6610-511-3314	114T	72	6610-526-6081	114A	
6610-511-3315	114T	56	6610-526-6082	114	
6610-511-3316	114T	71	6610-526-6083	114	
6610-511-3320	114T	31	6610-526-6083	114A	
6610-511-3321	114T	50	6610-526-6084	114	
6610-511-3322	114T	37	6610-526-6085	114	
6610-514-4175	114		6610-526-6085	114C	
6610-514-4176	114		6610-526-6087	114	
6610-514-4178	114		6610-526-6087	114C	
6610-514-4183	114		6610-526-6088	114	
6610-514-4183	114A		6610-526-6088	114C	
6610-515-5393	114		6610-526-6092	114	
6610-515-5824	113		6610-526-6092	114A	
6610-515-5824	114		6610-526-6765	113	
6610-515-5824	113F		6610-526-6765	114	
6610-515-5843	113		6610-526-6765	113E	
6610-515-5843	114		6610-526-7849	109	2
6610-515-5843	114H		6610-526-7895	113	
6610-515-5845	113		6610-526-7965	113	
6610-515-5845	114		6610-526-7965	114	
6610-515-5845	114G		6610-526-7965	114D	
6610-519-3242	113E	50	6610-526-7966	113	
6610-519-5036	114R	27	6610-526-7966	114	
6610-519-5220	114T	10	6610-526-7967	113	
6610-520-1829	114T	13	6610-526-7967	114	
6610-520-1831	114T	17	6610-526-7967	114D	
6610-522-2311	114D		6610-526-9763	113F	167
6610-523-4653	114S	84	6610-526-9764	113F	94
6610-523-5621	114D		6610-527-1233	114E	93
6610-525-0091	114S	105	6610-527-1233	114F	36
6610-525-5819	114D	18	6610-527-1238	113F	57
6610-525-5820	114D	11	6610-527-8227	113E	
6610-525-5902	113E		6610-527-8228	113E	107
6610-525-6022	114T	41	6610-528-4908	113E	120
6610-526-4397	113		6610-530-0028	113	

STOCK NUMBER	FIGURE NUMBER	ITEM NUMBER	STOCK NUMBER	FIGURE NUMBER	ITEM NUMBER
6610-530-0028	114		6610-570-9091	114A	88
6610-530-0028	114T		6610-570-9091	114L	
6610-530-1363	113		6610-571-4835	113E	
6610-530-1363	114		6610-576-9856	113E	
6610-530-1363	114B		6610-580-7922	113	
6610-530-3068	114D		6610-580-7922	114	
6610-530-3068	114L		6610-580-7922	114	41
6610-530-3955	114		6610-583-9666	114E	
6610-530-3955	114C		6610-583-9666	114F	98
6610-530-4716	113E	44	6610-584-4165	114A	
6610-530-4723	113E	46	6610-584-5853	114F	1
6610-531-4499	113		6610-585-1145	113	
6610-531-4499	114		6610-585-1145	113	
6610-531-4499	114S		6610-585-1145	114	
6610-532-2098	114C	27	6610-585-1145	114	
6610-535-1313	114B		6610-585-1145	114F	
6610-535-1313	114D		6610-585-9593	113E	
6610-535-1325	114A	82	6610-586-6309	114B	15
6610-535-1325	114L	80	6610-586-6310	114D	52
6610-535-1348	113E	142	6610-586-6311	114B	37
6610-536-1433	114		6610-586-6311	114D	
6610-536-4888	114		6610-586-6355	113E	42
6610-536-4892	114D	25	6610-586-6362	113E	72
6610-536-4974	114E	57	6610-586-6372	113E	
6610-536-4974	114E	91	6610-586-6373	113E	
6610-536-4974	114F	73	6610-586-6396	113F	231
6610-536-4974	114F	91	6610-588-4470	113F	67
6610-536-4974	114G	56	6610-589-0027	114B	11
6610-536-4974	114H	56	6610-589-0029	114B	34
6610-536-4974	114J	43	6610-589-0029	114D	
6610-536-4977	114E	45	6610-589-2677	113F	30
6610-544-3185	113E	27	6610-589-2679	113F	120
6610-544-3233	113E	63	6610-589-6477	113E	57
6610-545-5575	114B		6610-589-6479	113F	56
6610-545-5575	114D		6610-589-6483	113F	
6610-545-5587	113E	52	6610-589-6484	113F	114
6610-546-4613	114B		6610-589-6488	113F	240
6610-546-4613	114D		6610-591-3829	113E	
6610-546-4641	113E		6610-591-5055	113F	62
6610-546-4648	113E	122	6610-591-5056	113F	63
6610-550-6590	114		6610-591-5057	113F	64
6610-551-0673	113		6610-591-5058	113F	146
6610-551-0673	114		6610-600-1761	113E	28
6610-551-0673	114T		6610-601-4510	114A	73
6610-557-3101	113		6610-601-4510	114L	70
6610-557-3101	114		6610-608-1907	114	
6610-557-3114	113		6610-609-6936	114D	
6610-557-3114	114		6610-609-6937	114D	
6610-557-3170	113		6610-619-0132	114E	19
6610-557-3170	114		6610-619-0132	114F	16
6610-557-3171	113		6610-621-5825	114T	76
6610-557-3404	114		6610-621-5855	114T	49
6610-557-3405	114		6610-624-7038	113	
6610-557-3410	113		6610-624-7038	114	
6610-557-3410	114		6610-629-0078	114F	57
6610-558-0480	113		6610-629-0079	114F	6
6610-558-0480	113	9A	6610-629-0080	114F	9
6610-558-0480	114		6610-629-0081	114F	7
6610-558-0480	114	12A	6610-629-0083	114F	3
6610-558-0480	114D		6610-629-0084	114F	2
6610-559-4711	113F	16	6610-629-0085	114F	33
6610-560-2494	114		6610-629-0086	114E	106
6610-561-2968	114D		6610-629-0086	114F	56
6610-561-5662	114D		6610-629-0087	114E	
6610-561-5662	114L		6610-629-0087	114F	26
6610-564-9351	113		6610-629-0088	114E	
6610-566-9684	114		6610-629-0088	114F	
6610-566-9684	114C		6610-631-5687	114	
6610-567-5062	114T	35	6610-641-3015	113	
6610-567-5966	113E		6610-641-3015	114	
6610-567-5968	113E	125	6610-651-1485	113F	

STOCK NUMBER	FIGURE NUMBER	ITEM NUMBER	STOCK NUMBER	FIGURE NUMBER	ITEM NUMBER
6610-651-5661	114S	8	6610-776-4612	114F	40
6610-653-8458	114		6610-786-8546	113E	
6610-653-8458	114C		6610-790-2330	114G	117
6610-658-6566	113E	80	6610-793-0114	114G	105
6610-659-0737	114B	31	6610-805-4164	114	
6610-659-0737	114D	33	6610-821-9031	114L	35
6610-659-9275	113		6610-821-9066	114L	47
6610-659-9275	114		6610-832-3037	114T	21
6610-661-1797	114B	22	6610-855-6174	113E	49
6610-661-1797	114D	24	6610-859-6136	114F	
6610-663-4115	113		6610-860-4222	114T	29
6610-663-4115	114		6610-861-2179	114H	
6610-663-4115	114E		6610-867-1157	114F	23
6610-663-4136	113		6610-868-7569	114E	
6610-663-4136	114		6610-868-7569	114F	39
6610-663-4136	114J		6610-869-8670	114G	83
6610-663-4138	113		6610-871-0634	114B	82
6610-663-4138	114		6610-888-3191	114T	74
6610-663-4138	114S		6610-907-3123	114D	
6610-663-4148	113		6610-907-3124	114D	
6610-663-4148	114		6610-910-3254	114E	
6610-663-4153	113		6610-910-5509	113F	237
6610-663-4153	114		6610-914-6521	114G	3
6610-663-4153	114D		6610-918-1698	113E	
6610-663-4156	113		6610-918-1698	113E	19
6610-663-4156	114		6610-918-1699	113E	
6610-663-4156	114D		6610-918-1700	113E	40
6610-663-5799	113		6610-918-1701	113E	109
6610-663-7740	114		6610-918-3376	113	
6610-663-7749	114		6610-918-3376	114	
6610-663-8711	113		6610-920-4669	114E	
6610-663-8798	113		6610-920-9344	114G	
6610-663-8798	114		6610-924-7784	113	
6610-663-8798	113E		6610-924-7784	114	
6610-663-8800	113		6610-925-8644	114D	
6610-663-8800	114		6610-925-8645	114D	
6610-663-8800	113E		6610-927-7416	114G	
6610-664-2190	114G	42	6610-933-5621	114G	
6610-664-2190	114H	45	6610-936-8534	114A	
6610-664-2236	113F	156	6610-936-8535	114C	31
6610-683-9370	114E	2	6610-938-1759	114D	
6610-685-3974	113E	51	6610-941-0509	114F	59
6610-690-3570	114A		6610-941-0511	114G	
6610-694-8194	113E		6610-941-0513	114G	
6610-697-5785	114S	82	6610-941-0515	114G	46
6610-699-0719	114T	18	6610-945-5793	113F	54
6610-699-5531	113		6610-945-8319	113F	68
6610-699-5531	114		6610-945-8366	113F	28
6610-699-5531	113F	1	6610-945-8385	113F	89
6610-704-3039	114L	92	6610-945-8386	113F	96
6610-723-8691	114D		6610-945-8402	113F	121
6610-723-8698	114D		6610-945-8406	113F	50
6610-723-8725	114D		6610-945-8407	113F	52
6610-723-8731	114B	95	6610-950-7081	114D	
6610-731-7969	113	10A	6610-953-2383	114G	12
6610-731-7969	114	39A	6610-953-2383	114H	14
6610-734-3603	114T	43	6610-953-2383	114J	11
6610-752-8689	114		6610-953-2386	114G	114
6610-752-8689	114		6610-953-2386	114H	109
6610-752-8689	114	40	6610-953-2386	114J	94
6610-753-2104	114A	94	6610-953-2387	114G	123
6610-759-4159	114H		6610-953-2387	114H	115
6610-760-3298	114C	71	6610-953-2387	114J	100
6610-760-3299	114C		6610-953-2390	114G	17
6610-766-6938	114T	58	6610-953-2390	114H	19
6610-766-6943	114T	65	6610-953-2390	114J	16
6610-766-6944	114T	51	6610-953-2393	114H	112
6610-767-4602	114E	26	6610-953-2393	114J	97
6610-768-9619	114R		6610-953-2394	114H	25
6610-772-7857	114		6610-953-2394	114J	19
6610-773-2722	114		6610-953-2395	114H	

STOCK NUMBER	FIGURE NUMBER	ITEM NUMBER	STOCK NUMBER	FIGURE NUMBER	ITEM NUMBER
6610-953-2395	114J		6615-096-1342	113E	227
6610-953-2396	114H		6615-096-1342	113E	235
6610-953-2396	114J		6615-096-1381	113E	
6610-953-2397	114G	31	6615-096-1386	113E	240
6610-953-2397	114H	32	6615-096-1387	113E	
6610-953-2397	114J	24	6615-096-1388	113E	
6610-953-2398	114H		6615-096-1389	113E	
6610-953-2398	114J		6615-096-1399	113E	131
6610-953-2399	114H		6615-096-1428	113E	
6610-953-2400	114H		6615-096-1428	113E	287
6610-953-2401	114H	41	6615-096-1461	113E	179
6610-953-2402	114G		6615-096-1497	113E	210
6610-953-2402	114H		6615-098-5362	113E	192
6610-953-2404	114H		6615-166-7054	114G	57
6610-953-2405	114H	4	6615-166-7054	114H	57
6610-953-2406	114H	46	6615-166-7054	114J	44
6610-953-2407	114H	117	6615-167-2869	113E	
6610-953-2413	114H		6615-167-2891	114H	81
6610-953-2413	114J		6615-167-2891	114J	67
6610-953-2415	114H	11	6615-167-3823	113F	228
6610-953-2416	114H		6615-181-4216	113E	
6610-953-4944	114G	107	6615-181-4407	113F	
6610-953-4944	114H	103	6615-181-5395	114H	
6610-953-4944	114J	88	6615-181-5395	114J	
6610-953-4945	114G		6615-181-5423	113E	257
6610-953-4945	114H		6615-181-5642	114H	
6610-953-4945	114J		6615-181-5642	114J	
6610-963-5783	114		6615-181-6190	113E	
6610-963-5783	114L		6615-210-4566	113E	266
6610-973-2404	114G	23	6615-303-0336	113F	206
6610-973-2413	114G		6615-303-9587	113E	66
6610-975-0545	114C		6615-303-9941	113F	122
6610-975-0546	114C	20	6615-308-2480	113F	254
6610-976-3371	114A	93	6615-313-2009	114E	66
6610-976-3371	114L	74	6615-313-2009	114F	111
6610-979-8966	114C		6615-315-0899	106	120
6610-981-5078	114E		6615-321-3461	113E	
6610-981-5079	114E	3	6615-321-3461	113E	211
6610-981-5081	114E	32	6615-322-5562	114E	62
6610-981-5083	114E	109	6615-322-5562	114F	78
6610-981-5084	114E		6615-322-5563	114F	83
6610-981-6916	114E	103	6615-323-7681	113E	274
6610-981-6918	114E		6615-326-0652	113E	
6610-986-0411	113E	79	6615-326-0652	113E	216
6610-986-0415	113E		6615-329-0393	113F	125
6610-986-0418	113E	10	6615-334-6904	113E	245
6610-986-0419	113E	48	6615-337-5461	114E	
6610-986-0425	113E	17	6615-337-5461	114F	106
6610-993-5591	114C	1	6615-337-5462	114E	89
6610-993-5597	114C	40	6615-337-5463	114E	59
6615-028-2199	113E	258	6615-337-5463	114F	
6615-031-9030	114G	79	6615-337-5463	114F	75
6615-031-9031	114G	70	6615-340-2127	96	45
6615-032-0283	113F	197	6615-341-9770	96	1
6615-049-3976	114E	53	6615-346-1287	95	1
6615-049-3976	114F	69	6615-346-4259	113F	249
6615-049-3976	114G	60	6615-348-6699	113F	136
6615-049-3976	114H	60	6615-371-1722	113F	198
6615-049-3976	114J	47	6615-373-9416	114G	66
6615-049-3977	114F	85	6615-373-9416	114H	66
6615-049-3987	114E	73	6615-373-9416	114J	53
6615-073-6593	113E	260	6615-373-9417	114G	
6615-090-1322	113E	215	6615-373-9418	114G	
6615-091-7137	113E	212	6615-397-9936	113E	
6615-093-5490	113F	225	6615-397-9938	113E	276
6615-095-8893	113E		6615-397-9947	113E	197
6615-096-1295	113E	166	6615-398-0057	114E	
6615-096-1295	113E	58	6615-398-0057	114F	80
6615-096-1296	113E	285	6615-443-6059	114S	114
6615-096-1319	113E	190	6615-443-6951	114G	99
6615-096-1319	113E	195	6615-443-6951	114H	95

STOCK NUMBER	FIGURE NUMBER	ITEM NUMBER	STOCK NUMBER	FIGURE NUMBER	ITEM NUMBER
6615-443-6951	114J	80	6615-694-8188	113E	
6615-443-6964	114H	67	6615-694-8189	113E	
6615-443-6964	114J	54	6615-694-8190	113E	
6615-474-5599	113F	200	6615-694-8191	113E	
6615-474-5600	113F	201	6615-694-8192	113E	
6615-474-5601	113F	207	6615-694-8193	113E	
6615-487-6853	113E	251	6615-695-5170	113F	
6615-487-8208	114G	50	6615-695-5171	113F	253
6615-487-8208	114H	51	6615-711-2533	113E	
6615-487-8208	114J	39	6615-727-6970	114F	
6615-518-6894	114E	52	6615-727-6971	114E	
6615-518-6894	114F	66	6615-787-4288	50	
6615-527-1248	113F	126	6615-793-0189	114G	
6615-530-6724	113F	37	6615-874-3543	106	58
6615-530-6725	113F	15	6615-946-7008	113F	210
6615-530-6768	113F	185	6615-946-7011	113F	232
6615-530-6769	113F	235	6615-946-7012	113F	216
6615-530-6769	113F	243	6615-946-7020	113F	219
6615-530-6770	113F	234	6615-948-6562	113F	221
6615-530-6770	113F	244	6615-953-2373	114G	63
6615-531-2501	109	28	6615-953-2373	114H	63
6615-541-9753	96		6615-953-2373	114J	50
6615-545-5590	113E	219	6615-953-2384	114G	61
6615-545-9889	113E	90	6615-953-2384	114H	61
6615-546-4643	113E	259	6615-953-2384	114J	48
6615-557-3394	94	23	6615-953-2388	114G	
6615-557-3394	96		6615-953-2388	114H	86
6615-558-1434	113E		6615-953-2388	114J	72
6615-558-8068	114B	20	6615-953-2389	114G	104
6615-558-8068	114D		6615-953-2389	114H	99
6615-561-3004	113F	25	6615-953-2389	114J	84
6615-561-3772	113E	118	6615-953-2391	114G	72
6615-567-5973	113E		6615-953-2391	114H	72
6615-567-5974	113E		6615-953-2391	114J	58
6615-571-6241	96	22	6615-953-2408	114H	84
6615-572-9161	113F	134	6615-953-2408	114J	70
6615-586-6394	113F	236	6615-953-2409	114H	
6615-586-6395	113F	238	6615-953-2409	114J	
6615-589-6480	113F	213	6615-953-2410	114H	78
6615-589-6481	113F	214	6615-953-2410	114J	64
6615-589-6491	113F	178	6615-953-2411	114H	94
6615-589-6492	113F		6615-953-2411	114J	79
6615-589-6493	113F		6615-953-2412	114G	84
6615-591-6571	105	28	6615-953-2412	114H	83
6615-591-6572	105	30	6615-953-2412	114J	69
6615-591-6695	105	12	6615-957-7458	114G	
6615-592-4877	94		6615-957-7461	114G	
6615-600-3472	113E	204	6615-966-2288	95	14
6615-600-3472	113E	234	6615-986-0413	113E	254
6615-603-9002	113		6615-986-0423	113E	174
6615-603-9002	114		6615-986-0430	113E	
6615-613-5469	114G	89	6620-031-8505	114Q	5
6615-613-5469	114H	89	6620-041-2565	113E	156
6615-613-5469	114J	74	6620-049-4571	114P	9
6615-627-8105	94	19	6620-049-6416	113C	21
6615-627-8105	106	33	6620-055-1606	137	10
6615-629-0082	114F	63	6620-144-4768	114P	
6615-632-3262	114F	81	6620-166-7230	114P	
6615-652-4610	96		6620-181-4249	114P	55
6615-656-4461	106		6620-181-4249	114Q	21
6615-656-5123	94	3	6620-224-3478	77	
6615-662-9381	113F	124	6620-228-4360	77	
6615-662-9496	114E	48	6620-260-2840	113	
6615-662-9496	114F	89	6620-260-2840	114	
6615-663-3059	96	52	6620-261-2915	113C	36
6615-663-3448	106	113	6620-332-1620	113C	33
6615-663-8696	109		6620-332-1627	113A	92
6615-678-1936	114E	65	6620-332-1627	114R	76
6615-678-1936	114F	112	6620-334-7198	175	
6615-694-8186	113E		6620-347-8946	113C	2
6615-694-8187	113E		6620-443-7502	113C	31

STOCK NUMBER	FIGURE NUMBER	ITEM NUMBER	STOCK NUMBER	FIGURE NUMBER	ITEM NUMBER
6620-443-7502	113C	34	6620-797-3685	113	
6620-505-3906	113C	6	6620-797-3685	114	
6620-509-7932	113C	40	6620-860-3367	114P	57
6620-509-7934	113C	8	6620-936-2369	114Q	
6620-512-3282	114P	85	6620-963-1040	114Q	
6620-514-5334	113	23	6620-979-3753	113C	15
6620-514-5334	114	29	6620-979-3756	113C	43
6620-514-5793	113		6625-121-1244	114	
6620-514-5793	114		6625-166-1005	131	58
6620-515-5709	77		6625-166-1005	132	66
6620-523-9437	114P	101	6625-235-4782	114	
6620-525-6026	114P	30	6625-500-2218	113	
6620-525-6027	114P	13	6625-500-2218	114	
6620-525-6028	114P	71	6625-504-2329	113	
6620-525-6029	114P	100	6625-504-2329	114	
6620-525-6029	114Q	20	6625-519-0045	113	
6620-526-5011	113		6625-519-0045	114	
6620-526-5011	114		6625-544-5899	113	
6620-526-6141	175		6625-544-5899	114	
6620-526-7867	77		6625-629-4824	113	
6620-526-7870	77		6625-629-4824	114	
6620-526-7887	11		6625-631-8060	113	
6620-526-7887	77		6625-631-8060	114	
6620-529-9952	114P	68	6645-557-3241	113	
6620-529-9952	114Q	51	6645-557-3241	114	
6620-544-3327	114P	76	6645-950-8599	113	
6620-550-4543	114P	27	6645-950-8599	114	
6620-552-8338	114P	17	6650-034-3783	E50	
6620-553-8986	11	5	6660-327-6454	114A	95
6620-553-8986	77	17	6660-327-6454	114B	28
6620-553-8988	77	19	6660-327-6454	114C	42
6620-557-0266	113		6660-327-6454	114D	30
6620-557-0266	113		6660-327-6454	114L	91
6620-557-0266	114	42	6680-026-0283	113B	117
6620-557-0266	114	7	6680-026-0287	113B	118
6620-557-0363	113	22	6680-049-4550	114P	
6620-557-0363	113	25	6680-076-7331	113	
6620-557-0363	114	21	6680-076-7331	114	
6620-557-0363	114	27	6680-333-9640	113B	115
6620-561-5634	113		6680-348-1659	74	
6620-561-5634	114		6680-373-9426	114G	78
6620-561-5646	113		6680-439-8915	114P	
6620-561-5646	114		6680-439-8918	114P	11
6620-561-5646	113C		6680-439-8924	114P	
6620-578-5939	74		6680-439-8924	114Q	
6620-600-9595	84	21A	6680-515-5348	81	
6620-613-9938	132	36	6680-526-4370	79	
6620-613-9948	137		6680-526-5078	113	23A
6620-650-4453	114Q	6	6680-526-5078	114	28A
6620-663-4261	113		6680-526-5078	113B	
6620-663-4261	114		6680-527-3546	113B	9
6620-663-4261	114P		6680-527-9097	114P	10
6620-663-4282	113		6680-527-9098	114P	
6620-663-4282	114		6680-527-9099	114P	
6620-663-4282	114P		6680-528-4692	113B	104
6620-663-7766	113		6680-529-7882	113B	48
6620-663-7766	114		6680-531-6592	114E	
6620-663-8541	77		6680-531-6592	114F	
6620-675-2240	113A	93	6680-532-2080	114P	12
6620-675-2240	114R	78	6680-532-2446	113B	60
6620-693-7751	114P	60	6680-532-2448	113B	34
6620-695-2288	113C	29	6680-532-2449	113B	108
6620-699-0726	113C	30	6680-532-2452	113B	70
6620-708-2688	114Q	39	6680-532-2457	113B	101
6620-754-5946	113E	2	6680-556-8983	80	70
6620-758-1917	77		6680-557-0634	81	53
6620-767-8151	113		6680-557-0835	11	27
6620-767-8151	114		6680-557-0835	175	5
6620-767-8151	114Q		6680-564-9256	113B	50
6620-771-0697	113		6680-564-9257	113B	45
6620-771-0697	114		6680-564-9258	113B	65

STOCK NUMBER	FIGURE NUMBER	ITEM NUMBER	STOCK NUMBER	FIGURE NUMBER	ITEM NUMBER
6680-564-9259	113B	61	6680-983-2530	114Q	65
6680-564-9260	113B	62	6680-983-2531	114Q	42
6680-564-9262	113B	110	6680-992-7160	114H	100
6680-564-9263	113B	75	6680-992-7160	114J	85
6680-564-9264	113B	20	6685-019-8056	114A	36
6680-564-9265	113B	8	6685-019-8056	114A	59
6680-566-6660	113	18A	6685-025-1874	114A	67
6680-566-6660	114	25A	6685-026-0370	113B	14
6680-566-6661	113		6685-035-5792	114A	91
6680-566-6661	114		6685-035-5792	114L	63
6680-566-6662	132	90	6685-056-0542	113	
6680-566-6662	138	45	6685-087-8229	32	188
6680-566-6664	132		6685-087-8229	144	124
6680-566-6664	138		6685-087-8229	145	174
6680-566-6665	132		6685-144-4553	114C	
6680-566-9407	132	140	6685-166-7228	114C	63
6680-567-3559	132		6685-166-7277	114A	34
6680-567-3559	138		6685-166-7277	114A	48
6680-575-1129	79		6685-166-7277	114C	6
6680-618-6477	113B	29	6685-167-0939	114C	57
6680-624-8566	79	137	6685-167-0940	114A	60
6680-624-8570	80		6685-167-0940	114A	87
6680-624-8573	81		6685-167-0940	114C	65
6680-646-5378	113B	12	6685-167-0940	114L	84
6680-651-8005	113		6685-167-3801	114C	48
6680-651-8005	114		6685-180-8551	114A	81
6680-659-9276	113		6685-180-8551	114C	64
6680-659-9276	114		6685-180-8551	114L	79
6680-659-9276	114Q		6685-180-8574	114C	94
6680-662-9526	113B	120	6685-180-8915	114A	44
6680-662-9530	113B	116	6685-180-8915	114C	91
6680-670-2984	79		6685-180-9073	114A	23
6680-690-2929	113		6685-180-9073	114C	18
6680-690-2929	114		6685-180-9073	114L	23
6680-704-2232	114Q	52	6685-181-4214	114A	70
6680-735-6586	114P	73	6685-181-4214	114A	78
6680-735-6586	114P	83	6685-181-4214	114A	96
6680-735-6586	114Q	59	6685-181-4214	114B	74
6680-735-6586	114Q	62	6685-181-4214	114B	90
6680-735-6587	114P		6685-181-4214	114C	
6680-735-9126	114P		6685-181-4214	114C	43
6680-736-4068	114P	40	6685-181-4214	114D	104
6680-795-7551	114Q	47	6685-181-4214	114L	72
6680-795-7552	114Q	58	6685-181-4214	114L	77
6680-795-7553	114Q	11	6685-181-4214	114L	90
6680-860-3368	114P	36	6685-181-4265	114A	54
6680-860-3369	114P	89	6685-181-4265	114C	82
6680-976-9370	113B	74	6685-181-4400	114C	12
6680-976-9371	113B	21	6685-181-5342	114C	14
6680-976-9373	113B	49	6685-181-5354	114A	35
6680-976-9374	113B	55	6685-181-5354	114C	5
6680-976-9375	113B	78	6685-181-5354	114L	45
6680-976-9376	113B	91	6685-181-5368	114A	53
6680-976-9377	113B	97	6685-181-5368	114C	84
6680-976-9378	113B	95	6685-181-5368	114L	33
6680-976-9379	113B	100	6685-181-5369	114A	49
6680-976-9380	113B	125	6685-181-5369	114C	87
6680-976-9381	113B	106	6685-181-5414	114A	55
6680-976-9382	113B	121	6685-181-5414	114C	83
6680-976-9384	113B	123	6685-181-5414	114L	34
6680-977-1070	113B	37	6685-181-5415	114A	57
6680-977-1072	113B	113	6685-181-5415	114C	79
6680-977-5724	113B	124	6685-181-5415	114L	37
6680-978-2197	114Q		6685-181-5684	114A	50
6680-979-3778	114Q	53	6685-181-5684	114C	80
6680-980-0336	114Q	38	6685-181-5685	114A	56
6680-980-0339	114Q	74	6685-181-5685	114C	81
6680-983-2516	114Q	14	6685-181-6074	114A	61
6680-983-2521	114Q	22	6685-181-6074	114C	56
6680-983-2523	114Q	23	6685-181-6075	114A	43
6680-983-2524	114Q	69	6685-181-6075	114C	92

STOCK NUMBER	FIGURE NUMBER	ITEM NUMBER	STOCK NUMBER	FIGURE NUMBER	ITEM NUMBER
6685-181-6173	114C		6685-526-7730	113	
6685-181-6174	114C	76	6685-526-7730	114	
6685-181-9925	114A	68	6685-526-7731	113	
6685-181-9925	114C	54	6685-526-7731	114	
6685-181-9925	114L	68	6685-526-7881	32	
6685-211-9084	113B	64	6685-526-8415	BULK	
6685-216-6548	113B	119	6685-526-8573	109	
6685-223-6753	11		6685-526-8574	109	
6685-223-6753	77		6685-526-8650	175	1
6685-228-4361	77		6685-527-9322	109	
6685-263-1767	109		6685-530-3538	32	
6685-263-1770	109		6685-531-2432	113	
6685-304-6925	114A	92	6685-536-4889	114A	47
6685-304-6925	114L	65	6685-536-5013	113	
6685-304-6931	114A	76	6685-536-5013	114	
6685-304-6931	114L		6685-544-8345	114L	52
6685-329-0345	114A	28	6685-547-4364	114C	
6685-329-0856	114A	24	6685-553-4726	113	19
6685-329-0856	114C		6685-553-4726	114	24
6685-329-0858	114A	20	6685-556-8810	32	
6685-329-0858	114C		6685-557-0215	113	18
6685-334-6861	114A	37	6685-557-0215	114	25
6685-334-6861	114C	3	6685-557-0370	113	21
6685-334-6861	114L	48	6685-557-0370	113	24
6685-373-9004	25	31	6685-557-0370	114	22
6685-373-9004	31	37	6685-557-0370	114	28
6685-373-9004	174	1	6685-557-0370	114	31
6685-487-4263	113		6685-557-0371	113	20
6685-487-4263	114		6685-557-0371	114	23
6685-487-4274	113		6685-557-0832	109	
6685-487-4274	114		6685-557-3786	175	
6685-487-4441	113		6685-557-5316	109	1
6685-487-4441	114		6685-564-8454	109	
6685-487-4455	113		6685-585-9348	32	
6685-487-4455	114		6685-586-8971	114A	80
6685-487-4458	113		6685-613-5403	114A	
6685-487-4458	114		6685-663-5237	109	
6685-487-4611	113		6685-663-5729	77	
6685-487-4611	114		6685-663-8559	32	
6685-506-0079	114T	19	6685-663-8566	32	
6685-506-0080	114T	70	6685-663-9000	170	8
6685-506-0081	114T	28	6685-663-9000	174	
6685-506-0090	114T	75	6685-676-2617	KITS	
6685-512-1228	32		6685-703-6819	114A	29
6685-514-5070	113		6685-703-6819	114C	11
6685-514-5327	113		6685-703-7591	114A	83
6685-514-5327	114		6685-703-7591	114C	59
6685-514-5331	113		6685-704-1523	114A	30
6685-514-5331	114		6685-704-1523	114C	10
6685-514-6273	114		6685-704-1524	114A	31
6685-515-2851	114E	21	6685-704-1524	114C	9
6685-515-2851	114F	19	6685-779-8345	113	
6685-515-4710	32		6685-779-8345	114	
6685-516-7562	32	209	6685-833-3020	32	
6685-516-7562	144	121	6685-863-5815	84A	
6685-516-7562	145	184	6685-871-3478	114Q	1
6685-520-9675	114A	18	6685-979-8939	114Q	9
6685-520-9675	114C	22	6685-980-0332	114Q	
6685-526-4431	113		6695-329-0375	113E	
6685-526-4431	114		6695-334-6992	114G	7
6685-526-4547	113		6695-334-6992	114H	8
6685-526-4559	113		6695-334-6992	114J	6
6685-526-4559	114		6695-526-8024	114T	1
6685-526-5868	113		6695-578-5284	113	
6685-526-6121	113		6695-578-5284	114	
6685-526-6121	114		6695-578-5284	114Q	
6685-526-6197	114T	7	6695-580-9452	113E	35
6685-526-6199	114T	5	6695-585-3700	114F	8
6685-526-7179	113		6695-624-9541	113B	6
6685-526-7728	113		6695-654-9770	114B	1
6685-526-7728	114		6695-654-9770	114D	1

STOCK NUMBER	FIGURE NUMBER	ITEM NUMBER	STOCK NUMBER	FIGURE NUMBER	ITEM NUMBER
6695-683-9715	114E	9	8010-160-5788	MSUP	
6695-729-3851	113E		8010-161-7370	MSUP	
6695-855-8564	113B	4	8010-162-5289	MSUP	
6695-860-9543	114E		8010-165-5535	MSUP	
6810-184-4796	MSUP		8010-166-3145	MSUP	
6810-184-4800	MSUP		8010-166-3147	MSUP	
6810-201-0907	MSUP		8010-166-3150	MSUP	
6810-222-9641	MSUP		8010-166-3152	MSUP	
6810-223-9067	MSUP		8010-166-3158	MSUP	
6810-227-1281	MSUP		8010-166-3164	MSUP	
6810-237-2918	MSUP		8010-242-2089	MSUP	
6810-238-8119	MSUP		8010-242-6318	MSUP	
6810-264-6618	MSUP		8010-243-9767	MSUP	
6810-264-6715	MSUP		8010-246-6116	MSUP	
6810-264-9056	MSUP		8010-246-6443	MSUP	
6810-281-1864	MSUP		8010-246-6445	MSUP	
6810-281-2002	MSUP		8010-248-2838	MSUP	
6810-290-0048	MSUP		8010-251-6495	MSUP	
6810-290-0051	MSUP		8010-251-6503	MSUP	
6810-584-4070	MSUP		8010-257-5377	MSUP	
6810-597-2747	MSUP		8010-257-5378	MSUP	
6810-598-6600	MSUP		8010-290-4302	MSUP	
6810-855-6160	MSUP		8010-290-6159	MSUP	
6810-893-8138	MSUP		8010-297-0574	MSUP	
6840-721-6055	MSUP		8010-297-0593	MSUP	
6850-201-1218	MSUP		8010-297-2091	MSUP	
6850-264-6571	MSUP		8010-297-2092	MSUP	
6850-264-6572	MSUP		8010-297-2094	MSUP	
6850-264-9038	MSUP		8010-297-2095	MSUP	
6850-281-2031	MSUP		8010-515-0800	MSUP	
6850-341-8430	K5		8010-515-1598	MSUP	
6850-341-8430	MSUP		8010-515-2208	MSUP	
6850-664-9067	MSUP		8010-515-2258	MSUP	
6850-901-0591	MSUP		8010-558-7026	MSUP	
6850-935-0995	MSUP		8010-597-7842	MSUP	
6930-288-4514	114L	54	8010-597-7843	MSUP	
6930-443-8915	114A	5	8010-597-7856	MSUP	
7510-266-6712	MSUP		8010-598-2634	MSUP	
7510-473-8157	BULK		8010-598-4718	MSUP	
7510-550-7125	MSUP		8010-598-5057	MSUP	
7510-550-7126	MSUP		8010-598-5946	MSUP	
7510-550-7127	BULK		8010-616-4009	MSUP	
7510-550-7127	MSUP		8010-616-9143	MSUP	
7510-550-7129	MSUP		8010-664-6155	MSUP	
7510-579-8724	BULK		8010-664-8263	MSUP	
7510-579-8829	BULK		8010-687-3636	MSUP	
7510-579-8831	BULK		8010-687-4019	MSUP	
7510-579-8832	BULK		8010-687-4386	MSUP	
7510-579-8841	BULK		8010-835-2114	MSUP	
7510-579-8846	BULK		8010-899-0931	MSUP	
7510-579-8938	BULK		8010-899-8825	MSUP	
7510-579-8939	BULK		8010-913-8743	MSUP	
7510-582-0635	BULK		8010-930-7258	MSUP	
7510-582-0666	BULK		8010-941-8712	MSUP	
7510-582-7686	BULK		8010-943-7126	MSUP	
7510-582-7688	BULK		8010-983-8094	MSUP	
7510-584-0213	BULK		8010-985-0751	MSUP	
7510-634-3267	MSUP		8010-995-3054	MSUP	
7510-753-4727	BULK		8030-082-2425	MSUP	
7510-753-4728	BULK		8030-087-8630	MSUP	
7510-753-4730	BULK		8030-209-8005	MSUP	
7510-753-4733	BULK		8030-231-2353	MSUP	
7510-753-4741	BULK		8030-231-2354	MSUP	
7510-753-4742	BULK		8030-242-3193	MSUP	
7510-889-3494	BULK		8030-244-1298	MSUP	
7920-205-1711	MSUP		8030-252-3391	MSUP	
7920-823-9772	MSUP		8030-262-9045	MSUP	
7930-267-5588	MSUP		8030-275-8117	MSUP	
7930-634-5340	MSUP		8030-281-2339	MSUP	
8010-152-3245	MSUP		8030-285-1570	MSUP	
8010-160-5787	MSUP		8030-514-0981	MSUP	

STOCK NUMBER	FIGURE NUMBER	ITEM NUMBER	STOCK NUMBER	FIGURE NUMBER	ITEM NUMBER
8030-515-0319	MSUP		9320-141-7166	BULK	
8030-559-6131	MSUP		9320-141-7575	45	30
8030-613-3131	MSUP		9320-171-4583	192	14
8030-656-1426	MSUP		9320-171-4583	193	13
8030-664-4968	MSUP		9320-171-4850	192	13
8030-754-2408	MSUP		9320-171-4850	193	12
8030-811-3723	MSUP		9320-171-4854	BULK	
8030-829-0376	MSUP		9320-221-4387	132	105
8030-965-2437	MSUP		9320-221-4387	137	14
8040-165-8614	MSUP		9320-221-4387	137	21
8040-200-3794	MSUP		9320-221-4387	137	31
8040-200-4390	MSUP		9320-221-4387	137	37
8040-221-3806	MSUP		9320-224-9351	106	31
8040-281-1974	MSUP		9320-241-9742	BULK	
8040-809-8252	MSUP		9320-241-9746	BULK	
8105-290-0340	BULK		9320-241-9754	BULK	
8105-880-4353	MSUP		9320-241-9758	BULK	
8115-018-5329	E28	9	9320-241-9763	BULK	
			9320-250-0816	41	161
8115-300-8602	A24		9320-250-0816	41	202
8115-390-5562	E28		9320-250-0816	48	12
8115-390-5565	E92		9320-290-0896	BULK	
8115-532-7327	A1		9320-291-0416	BULK	
8115-560-1175	A25		9320-379-2615	41	160
8115-569-4834	A1		9320-379-2615	41	201
8115-614-4808	A1		9320-379-2615	48	13
8115-614-4811	A1		9320-379-2615	BULK	
8115-614-4849	A25		9320-510-4489	212A	161
8115-777-0048	A25	4	9320-510-4489	212A	172
8115-799-1775	A1		9320-510-4489	212A	36
8115-814-5298	A25		9320-510-4489	212A	90
8115-856-0452	A25		9320-554-9387	42	68
8115-975-7120	A25		9320-587-0978	112	27
8125-663-2987	24	11	9320-629-0974	BULK	
8125-663-2989	24	12	9320-633-6840	46	59
8125-685-4964	141	30	9320-640-9425	BULK	
8125-933-4414	BULK		9320-641-7084	BULK	
8135-634-2946	MSUP		9320-833-6083	BULK	
8135-663-0196	MSUP		9320-902-7587	BULK	
8135-906-1339	BULK		9330-260-3800	BULK	
8135-906-1340	BULK		9330-260-3805	BULK	
8135-906-1341	BULK		9330-260-3806	BULK	
8135-906-1342	BULK		9330-290-3458	BULK	
8135-906-1343	BULK		9330-290-3461	BULK	
8135-906-1344	BULK		9330-576-3980	BULK	
8305-262-1672	BULK		9330-576-3984	BULK	
8305-262-3290	BULK		9330-585-8678	BULK	
8305-267-3116	BULK		9330-585-8761	BULK	
8305-290-5594	BULK		9505-186-9160	BULK	
8305-633-9844	BULK		9505-242-7527	BULK	
8330-823-7545	MSUP		9505-248-9846	BULK	
8520-231-3006	MSUP		9505-248-9848	BULK	
9150-082-2449	MSUP		9505-248-9849	BULK	
9150-223-4003	MSUP		9505-248-9851	BULK	
9150-223-4130	MSUP		9505-293-4208	BULK	
9150-223-4134	MSUP		9505-554-1420	BULK	
9150-250-0926	MSUP		9505-596-1660	BULK	
9150-252-6383	MSUP		9505-596-5101	BULK	
9150-257-5360	MSUP		9505-640-4290	BULK	
9150-263-3490	MSUP		9510-228-6373	BULK	
9150-265-9413	MSUP		9510-228-6404	BULK	
9150-265-9436	MSUP		9510-228-6411	BULK	
9150-269-8374	MSUP		9510-243-7618	BULK	
9150-273-2397	MSUP		9510-287-9854	BULK	
9150-577-5841	MSUP		9510-529-8689	BULK	
9150-616-9020	MSUP		9515-184-8808	BULK	
9150-754-2595	MSUP		9515-184-8815	BULK	
9150-782-2627	MSUP		9525-803-3044	81A	
9150-965-2305	MSUP		9530-236-1345	BULK	
9150-985-7246	MSUP		9530-236-8429	BULK	
9150-985-7247	MSUP		9535-066-6921	BULK	

STOCK NUMBER	FIGURE NUMBER	ITEM NUMBER	STOCK NUMBER	FIGURE NUMBER	ITEM NUMBER
9535-084-4372	BULK				
9535-084-4420	BULK				
9535-084-4519	BULK				
9535-084-4532	BULK				
9535-084-4551	BULK				
9535-084-4592	BULK				
9535-085-4133	BULK				
9535-085-4157	BULK				
9535-085-4408	BULK				
9535-085-4420	BULK				
9535-086-9729	BULK				
9535-086-9753	BULK				
9535-086-9809	BULK				
9535-086-9860	BULK				
9535-086-9884	BULK				
9535-167-2151	BULK				
9535-167-2219	BULK				
9535-167-2247	BULK				
9535-167-2267	BULK				
9535-167-2274	BULK				
9535-167-2278	BULK				
9535-167-2279	BULK				
9535-167-2280	BULK				
9535-232-0378	BULK				
9535-232-0405	BULK				
9535-232-0501	BULK				
9535-232-0529	BULK				
9535-232-0569	BULK				
9535-232-0583	BULK				
9535-232-1881	BULK				
9535-232-6870	BULK				
9535-232-7535	BULK				
9535-232-7539	BULK				
9535-232-7541	BULK				
9535-232-7597	BULK				
9535-236-7075	BULK				
9535-236-7081	BULK				
9535-243-1875	BULK				
9535-249-5809	BULK				
9535-249-5811	BULK				
9535-250-6502	BULK				
9535-267-2236	BULK				
9535-288-0675	BULK				
9535-542-4705	BULK				
9535-554-1417	BULK				
9535-554-1419	BULK				
9535-575-5982	BULK				
9535-596-3767	BULK				
9535-686-5783	BULK				
9620-276-7901	MSUP				
9905-205-1606	113				
9905-205-1606	114				
9905-634-1473	109	12			
9905-634-1473	113				
9905-634-1473	114				
9905-696-1825	47				
9905-712-0544	113B	10			

This list contains those Federal stock number changes and assignments received subsequent to computer printing of camera ready copy for this publication. Related text and reference number indices are also updated.

STOCK NUMBER	FIGURE NUMBER	ITEM NUMBER
1560-633-6492	31	
1650-442-6143	125B	25
1730-492-3017	F1	4
2810-125-4133	190	
2810-133-9821	190	
2810-179-6985	190	
3110-198-1264	56	99A
4720-935-1598	54	1
4730-725-4351	17	15
4730-725-4351	145	
4730-725-4351	145	
4730-725-4351	147	
4730-725-4351	147	
4740-933-0942	54	15
4740-933-0942	54	40
5110-941-6440	130	
5305-144-3828	33	34
5305-144-3828	147	24
5305-144-3828	148	
5305-150-9405	104	90
5305-150-9405	147	21
5305-151-0837	55	101
5305-531-0298	128	
5305-631-4496	132	39
5305-889-2999	131	
5305-889-2999	131	
5305-889-2999	131	
5305-889-2999	132	
5305-889-2999	154	
5305-889-3000	131	16
5305-958-4351	145	175
5305-984-6194	131	
5305-984-6195	131	7
5305-984-6195	131	32
5305-984-6201	131	44
5305-989-7434	54	26
5305-989-7434	54	51
5305-989-7435	11	15
5305-989-7435	11D	19
5305-989-7435	12	6
5305-989-7435	12	7
5305-989-7435	72	15
5305-989-7435	102	7
5305-989-7435	105	36
5305-995-3441	147	28
5306-156-2703	56	70
5306-550-2138	153	6
5307-025-8273	30	9
5307-207-8367	125B	9
5310-045-3299	131	
5310-045-3299	131	
5310-167-0671	130	
5310-184-8977	131	69
5310-184-8977	131	75
5310-262-5076	131	70
5310-262-5076	131	77
5310-282-7817	145	48
5310-282-7817	145	66
5310-550-5009	128	
5310-550-5009	128	
5310-550-5009	128	
5310-550-5009	129	
5310-550-5009	131	
5310-550-5009	131	
5310-550-5009	131

This list contains those Federal stock number changes and assignments received subsequent to computer printing of camera ready copy for this publication. Related text and reference number indices are also updated.

STOCK NUMBER	FIGURE NUMBER	ITEM NUMBER	STOCK NUMBER	FIGURE NUMBER	ITEM NUMBER
5340-061-1812	55	15			
5340-067-9871	152	1			
5340-067-9875	55	1			
5340-067-9875	56	1			
5340-067-9875	56	20			
5340-067-9875	56	56			
5340-580-5787	146	8			
5340-709-1680	49				
5905-752-7341	130	11			
5940-082-4642	132	5			
5940-825-7865	129	1			
5940-950-1610	132				
5940-950-1610	132				
5940-950-1690	132				
6220-295-0897	131	65			
6240-225-5128	154	11A			
7930-766-5197	125B	5			

1597

SECTION IV

PART 2

ALPHA-NUMERICAL REFERENCE

NUMBER INDEX
AND
SUPPLEMENTARY INDEX

1597

REFERENCE NUMBER	MFG CODE	FIG NUMBER	ITEM NUMBER	REFERENCE NUMBER	MFG CODE	FIG NUMBER	ITEM NUMBER
AAF115000	80465	113		AH2847AD	61349	113C	10
AAF115000	80465	114	42	AH3217		KITS	
AAF115000	80465	114	7	AH3217A	61349	113C	5
AAF261150	80510	113		AH3217J		KITS	
AAF261150	80510	114		AH3285	61349	113C	19
AA40100	62983	35	31	AH3736A	61349	113C	17
AA40100	62983	35A		AH3796	61349	113C	31
AA6000-3	78286	122		AH3796	61349	113C	34
AA6000-3	78286	KITS		AH3829	61349	113C	20
AB44-07	45598	85	41	AH3830	61349	113C	18
AB890		KITS		AH3835	61349	113C	27
AB910		KITS		AH3847	61349	113C	14
AB917		KITS		AH3850A	61349	113C	37
AB920		KITS		AH4071		KITS	
AB924		KITS		AH4072	61349	113C	45
AB930		KITS		AH4077		KITS	
AB933A		KITS		AH4078		KITS	
AB939		KITS		AH4083		KITS	
AB946A		KITS		AH4084		KITS	
AB970		KITS		AH4085		KITS	
ACA1141-21	76912	117	56	AH4086		KITS	
ACA1143-52	76912	117	26	AH4090		KITS	
ACA1143-52	76912	117	57	AH4097		KITS	
ACA1143-52	76912	117	87	AH4098		KITS	
ACA1203	76912	118		AH41AH		KITS	
ACA2128	76912	117	2	AH4225		KITS	
ACA2128	76912	118	141	AH4506	61349	113C	40
ACA2128	76912	118	41	AH483AB	61349	113C	32
ACA2128	76912	118	90	AH483AH		KITS	
AC200322	76912	119	17	AH483H		KITS	
AC271	70040	213		AH483J		KITS	
AC272	70040	213		AH500A		KITS	
AC273	70040	213		AH500K		KITS	
AC50-16	31435	175D	25	AH501BX		KITS	
AC72-14	88623	BULK		AH501CR		KITS	
AC72-14	31435	175D	46	AH940BE		KITS	
AD18902	61349	113C	6	AH940H	61349	113C	7
AE312EK		KITS		AH98AZ	61349	113C	39
AE657A	61349	113C	12	AH98DA		KITS	
AE658A	61349	113C	25	AH98DB		KITS	
AE659	61349	113C	24	AJ4-45	72794	50	225
AE719		KITS		ALODINEKITN012	84063	MSUP	
AF356-428		KITS		ALPPH-E6-12	29666	50	35
AF934-101		KITS		ALPPH-T6-9	29666	51	14
AF934-103	77200	175F		ALPPHE6-5	29666	154	123
AH1201-0	61349	113C	1	ALPPHE6-9	29666	49	78
AH13A		KITS		ALPPHT6-3	29666	41	73
AH150BW	61349	113C	23	ALPPHT6-3	29666	49	
AH155AB		KITS		ALPPHT6-3	29666	BULK	
AH155J	61349	113C	11	ALPPHT6-5	29666	49	
AH155R	61349	113C	16	ALPPHT6-5	29666	53	15
AH155W	61349	113C	13	ALPPHT6-5	29666	154	63
AH1834AC		KITS		ALPPHT6-6	29666	41	141
AH1878AH		KITS		ALPPHT6-6	29666	52	10
AH1941Y		KITS		ALPPHT6-6	29666	53	14
AH2025GX	61349	113C	36	ALPPHT6-6	29666	154	128
AH2025GY	61349	113C	28	ALPPHT6-7	29666	52	9
AH2025HC	61349	113C	38	ALPPHT6-7	29666	53	11
AH2025JF		KITS		ALPPHT6-8	29666	52	37
AH2025JK		KITS		ALPPHT6-9	29666	52	43
AH2025MY	61349	113C	41	ALPPHT8-10	29666	52	29
AH216U	61349	113C	22	ALPPHT8-5	29666	53	10
AH219D	61349	113C	42	ALPPHT8-6	29666	50	214
AH2461BI		KITS		ALPPHT8-6	29666	51	6
AH2745AO		KITS		ALPPHT8-6	29666	51	8
AH277P		KITS		ALPPHT8-6	29666	52	14
AH2833C	61349	113C	44	ALPPHT8-7	29666	52	13
AH2835AE		KITS		ALPPHT8-8	29666	51	5
AH2835AG		KITS		ALPPHT8-8	29666	52	33
AH2835F	61349	113C	9	ALPPHT8-8	29666	150	91
AH2835Y	61349	113C	35	ALP426H-T8-7	29666	52	5

REFERENCE NUMBER	MFG CODE	FIG NUMBER	ITEM NUMBER	REFERENCE NUMBER	MFG CODE	FIG NUMBER	ITEM NUMBER
ALP426HT8-6	29666	52	32	AN104042		KITS	
ALO	81349	BULK		AN104145		KITS	
AL1256-17		KITS		AN104145	88044	24	25
AL1256-17	08484	125A	13	AN104145	88044	198	2
AL1256-2		KITS		AN104149		KITS	
AL1256-2	08484	125A	60	AN104149	88044	24	5
AL1256-34		KITS		AN104343		KITS	
AL1256-34	08484	125A	50	AN104343	88044	24	23
AL1256-36	08484	125A	99	AN107408	88044	210	7
AL1256-37	08484	125A	100	AN107408	88044	210	9
AL1256-4		KITS		AN107446	88044	207	22
AL1256-4	08484	125A	71	AN115410	88044	210	28
AL1256-4	08484	125A	77	AN115432	88044	210	29
AL1256-40		KITS		AN115455	88044	194	13
AL1256-40	08484	125A	138	AN115756	88044	204	11
AL2274		KITS		AN115805	88044	201	7
AL2274	08484	125A		AN115805	88044	BULK	
AL2274	08484	125A	82	AN115807	88044	BULK	
AL2593-6		KITS		AN115808	88044	200	5
AL2593-6	08484	125A	134	AN115860	88044	200	8
AL58D1113A1	73760	33	33	AN115862	88044	199	17
AL58D1113A1	73760	147	23	AN115907	88044	BULK	
AL58D1113A1	73760	148	33	AN117005	88044	192	24
ANN1068BD	61349	113C	30	AN117005	88044	193	23
ANN1068BE	61349	113C	29	AN12	88044	BULK	
ANN1092B	61349	113C	33	AN121552	88044	200	49
ANN1118M	61349	113C	15	AN121552	88044	205	13
ANN1283		KITS		AN121554	88044	204	7
ANN1284		KITS		AN121562	88044	189	4
ANN1286		KITS		AN122579	88044	191	
ANN1288		KITS		AN122582	88044	151	
ANN1327A		KITS		AN122582	88044	155	
ANN1414A	61349	113C	2	AN122582	88044	BULK	
ANQQS685	81352	BULK		AN122583	88044	179	3
AN100036	88044	32	48	AN122583	88044	179	5
AN100039	88044	205	18	AN122584		KITS	
AN101106	88044	213	9	AN122584	88044	16	
AN101108	88044	191	22	AN122584	88044	179	10
AN101108	88044	191	3	AN122584	88044	183	
AN101108	88044	195	2	AN122585		KITS	
AN101113	88044	193	11	AN122585	88044	12	
AN101224	88044	184	9	AN122585	88044	13	
AN101230	88044	BULK		AN122585	88044	14	
AN102810	88044	215	6	AN122585	88044	16	
AN102906	88044	190	63	AN122585	88044	16	
AN102906	88044	196	2	AN122585	88044	16	74
AN102906	88044	197	2	AN122585	88044	16	80
AN102908	88044	213	5	AN122585	88044	16	84
AN102910	88044	206	46	AN122693	88044	184	43
AN102926	88044	185	11	AN122693	88044	199	7
AN102927	88044	187	41	AN122693	88044	206	31
AN103006	88044	190	65	AN122693	88044	206	32
AN103009	88044	204	17	AN122693	88044	206	33
AN103009	88044	205	9	AN122693	88044	206	34
AN103009	88044	206	25	AN122693	88044	207	25
AN103009	88044	206	78	AN122693	88044	208	34
AN103009	88044	206	81	AN122693	88044	208	67
AN103012	88044	209	2	AN122704	88044	188	32
AN103012	88044	209	6	AN122705	88044	186	12
AN103015	88044	198	22	AN122705	88044	187	13
AN103022	88044	206	2	AN122717	88044	206	66
AN103108	88044	187	39	AN122744	88044	200	20
AN103108	88044	187	8	AN123026	88044	200	17
AN103221	88044	184	22	AN123856	88044	113E	117
AN103809	88044	187	15	AN123857	88044	206	11
AN103813	88044	84		AN123858	88044	113E	110
AN103909	88044	203	6	AN123858	88044	113E	38
AN103909	88044	206	75	AN123858	88044	113E	43
AN103912	88044	198	34	AN123860	88044	BULK	
AN104041		KITS		AN123860	88044	113E	33
AN104041	88044	23	22	AN123861	88044	125A	6

REFERENCE NUMBER	MFG CODE	FIG NUMBER	ITEM NUMBER	REFERENCE NUMBER	MFG CODE	FIG NUMBER	ITEM NUMBER
AN123862	88044	BULK		AN158934	88044	206	
AN123864	88044	198	19	AN158935	88044	206	
AN123864	88044	206	18	AN161333	88044	206	42
AN123866	88044	210	36	AN161334	88044	206	
AN123867	88044	207	38	AN161335	88044	206	
AN123868	88044	206	20	AN161336	88044	206	
AN123870	88044	158	2	AN173-6A		KITS	
AN123871	88044	206	51	AN173-7A		KITS	
AN123876	88044	209	8	AN173C12A	88044	169	92
AN123884	88044	204	18	AN173H10A	88044	55	23
AN123884	88044	206	72	AN173H10A	88044	55	29
AN123884	88044	206	82	AN173H10A	88044	55	35
AN123886	88044	206	79	AN173H10A	88044	55	49
AN123893	88044	207	33	AN173H10A	88044	55	52
AN123896	88044	207	34	AN173H10A	88044	55	72
AN123898		KITS		AN173H10A	88044	55	80
AN123898	88044	28	6	AN173H10A	88044	55	86
AN123898	88044	BULK		AN173H10A	88044	56	92
AN123903		KITS		AN173H10A	88044	91	27
AN123920		KITS		AN173H10A	88044	96	30
AN123923	88044	184	5	AN173H11A	88044	55	24
AN123924		KITS		AN173H11A	88044	55	30
AN123924	88044	23	9	AN173H11A	88044	55	42
AN123931	88044	BULK		AN173H11A	88044	55	48
AN123962	88044	200	46	AN173H11A	88044	55	73
AN123964	88044	114G	62	AN173H11A	88044	56	87
AN123964	88044	114H	62	AN173H11A	88044	90	15
AN123964	88044	114J	49	AN173H11A	88044	90	3
AN124989	88044	194	8	AN173H11A	88044	96	
AN125589	88044	192	3	AN173H11A	88044	107	27
AN125589	88044	192	7	AN173H12A	88044	55	36
AN125589	88044	193	5	AN173H12A	88044	90	9
AN125589	88044	193	9	AN173H12A	88044	91	28
AN125589	88044	194	16	AN173H12A	88044	BULK	
AN125908		KITS		AN173H14A	88044	56	94
AN125913	88044	206	19	AN173H16A	88044	90	2
AN125988	88044	184	38	AN173H16A	88044	104	32
AN125989	88044	184		AN173H20A	88044	55	92
AN125990	88044	184		AN173H20A	88044	104	38
AN125991	88044	184		AN173H21A	88044	104	34
AN125991	88044	BULK		AN173H21A	88044	104	83
AN125992	88044	184		AN173H21A	88044	BULK	
AN150232	88044	200	51	AN173H5A	88044	BULK	
AN150232	88044	208		AN173H6	88044	BULK	
AN150253	88044	BULK		AN173H6A	88044	96	2
AN150410	88044	BULK		AN173H6A	88044	96	7
AN150433	88044	BULK		AN173H6A	88044	106	55
AN150433	88044	202A	15	AN173H7A	88044	95	11
AN151156	88044	206	67	AN173H7A	88044	100	7
AN151157	88044	206		AN174-14		KITS	
AN151158	88044	206		AN174-7A		KITS	
AN151159	88044	206		AN174CH12A	88044	169	1
AN151160	88044	206		AN174CH12A	88044	169	2
				AN174H10A	88044	73	4
				AN174H10A	88044	116	40
				AN174H11A	88044	98	12
				AN174H11A	88044	98	19
				AN174H11A	88044	98	25
AN155B32S	88044	44	46	AN174H11A	88044	98	6
AN155B32S	88044	101	104	AN174H11A	88044	101	47
AN155B32S	88044	101	66	AN174H11A	88044	169	26
				AN174H12A	88044	73	3
AN155027	88044	190	33	AN174H12A	88044	BULK	
AN155028	88044	190		AN174H13A	88044	55	91
AN155029	88044	190		AN174H13A	88044	101	48
AN155030	88044	190		AN174H13A	88044	105	10
AN157127	88044	206	41	AN174H14	88044	38	4
AN157128	88044	206		AN174H14	88044	158	20
AN157129	88044	206		AN174H14A	88044	119	34
AN157130	88044	206		AN174H15	88044	169	51
AN158933	88044	206	43	AN174H15A	88044	101	42

REFERENCE NUMBER	MFG CODE	FIG NUMBER	ITEM NUMBER	REFERENCE NUMBER	MFG CODE	FIG NUMBER	ITEM NUMBER
AN174H16	88044	96		AN200KP4	88044	88	19
AN174H16A	88044	96	82	AN200KP4	88044	89	7
AN174H16A	88044	119	23	AN200KP4	88044	97	11
AN174H17	88044	96		AN200KP4	88044	101	51
AN174H17A	88044	55	76	AN200KP4	88044	153	15
AN174H17A	88044	55	81	AN200KP5	88044	102	27
AN174H17A	88044	56	91	AN200KS3L		KITS	
AN174H17A	88044	96	81	AN200KS3L	88044	96	38
AN174H20	88044	BULK		AN200KS3L	88044	96	4
AN174H20A	88044	36	6	AN200KS3L	88044	106	13
AN174H20A	88044	105	38	AN200KS4	88044	97	31
AN174H23	88044	38	2	AN200KS4	88044	101	33
AN174H25A	88044	87	150	AN200KS4	88044	105	14
AN174H30A	88044	BULK		AN200KS4	88044	106	118
AN174H42	88044	169	61	AN200K3L	88044	96	3
AN174H42	88044	169	75	AN201KP10A	88044	21	31
AN174H42A	88044	BULK		AN201KP10A	88044	21	60
AN174H47A	88044	105	45	AN201KP4A	88044	56	74
AN174H5A	88044	BULK		AN201KP4A	88044	69	14
AN174H50A	88044	BULK		AN201KP4A	88044	71	13
AN174H6A	88044	41	54	AN201KP4A	88044	73	5
AN174H65A	88044	88	18	AN201KP4A	88044	105	41
AN174H7A	88044	38	52	AN201KP4A	88044	169	53
AN174H7A	88044	41	55	AN201KP4A	88044	169	54
AN174H7A	88044	101	111	AN201KP4A	88044	169	69
AN174H7A	88044	104	30	AN201KP4A	88044	169	72
AN174H7A	88044	104	62	AN201KP8A	88044	72	5
AN175-30A	88044	179	2	AN201KP8A	88044	72	9
AN175CH50	88044	105	52	AN201KP8A	88044	107	24
AN175H10	88044	176	36	AN202KP21B	88044	107	23
AN175H10	88044	176	37	AN202KP23B	88044	93	10
AN175H11	88044	101	25	AN202KP23B	88044	93	23
AN175H11	88044	101	26	AN202KP37B	88044	88	
AN175H11	88044	101	55	AN206DSPG		KITS	
AN175H11	88044	101	93	AN216-1-14		KITS	
AN175H12	88044	36	2	AN216-1-8		KITS	
AN175H13	88044	36	11	AN216CP16	88044	78A	6
AN175H13	88044	BULK		AN22-18	88044	90A	4
AN175H21	88044	98	15	AN22-18A		KITS	
AN175H21	88044	98	2	AN220-2	88044	101	54
AN175H21	88044	99	2	AN220-2	88044	101	92
AN175H21	88044	BULK		AN220-2	88044	105	56
AN175H47	88044	105	51	AN220-2	88044	105	59
AN175H47	88044	BULK		AN220-2	88044	105	64
AN175H50	88044	BULK		AN227-14	88044	BULK	
AN175H6	88044	BULK		AN227-6	88044	119	
AN176-15	88044	98	1	AN227-7	88044	119	2
AN176-15	88044	98	14	AN227-8	88044	43	66
AN176-15	88044	99	1	AN227-8	88044	44	4
AN176-24A	88044	36	17	AN227-8	88044	49	45
AN176H11	88044	BULK		AN227-8	88044	115	
AN176H13	88044	176	44	AN227-8	88044	115	6
AN176H14	88044	BULK		AN227-8	88044	115	86
AN176H17	88044	125	6	AN227-8B9B	88044	43	67
AN176H20	88044	125	13	AN227-8B9B	88044	115	
AN176H26	88044	BULK		AN227-8B9B	88044	115	92
AN176H30	88044	176	43	AN227-8B9B	88044	126	10
AN177H34	88044	BULK		AN227-8B9B	88044	126	23
AN177H37	88044	BULK		AN227-8B9B	88044	126	3
AN178-20	88044	167	9	AN227-8B9B	88044	126	6
AN178H13	88044	36	23	AN227-9B	88044	BULK	
AN178H15	88044	BULK		AN229-2AL24I	88044	126	14
AN178H17	88044	BULK		AN229-2AL24I	88044	126	27
AN178H22	88044	BULK		AN23-10	88044	104	72
AN178H23	88044	38	33	AN23-10	88044	104	88
AN178H23	88044	BULK		AN23-10	88044	122	54
AN178H26	88044	BULK		AN23-10A	88044	50	173
AN178H27	88044	BULK		AN23-10A	88044	50	178
AN178H64	88044	BULK		AN23-11	88044	42	21
AN200KP3	88044	55	96	AN23-11	88044	122	53
AN200KP3	88044	55	98	AN23-14	88044	105	16

REFERENCE NUMBER	MFG CODE	FIG NUMBER	ITEM NUMBER	REFERENCE NUMBER	MFG CODE	FIG NUMBER	ITEM NUMBER
AN23-15A	88044	116	24	AN3-11A	88044	119	47
AN23-15A	88044	116	26	AN3-3A		KITS	
AN23-16		KITS		AN3-31	88044	175E	4
AN23-17	88044	88	12	AN3-31A	88044	175E	
AN23-17	88044	BULK		AN3-6A	88044	119	46
AN23-18	88044	BULK		AN3CH12A	88044	BULK	
AN23-19	88044	42	24	AN3CH3	88044	BULK	
AN23-22	88044	108	39	AN3CH3A	88044	176	75
AN23-23		KITS		AN3CH3A	88044	176	77
AN23-25A	88044	46	3	AN3CH37A	88044	169	21
AN23-26	88044	104	73	AN3CH4A	88044	50	364
AN23-26	88044	104	89	AN3CH5A	88044	39	33
AN23-29A	88044	BULK		AN3CH5A	88044	45	17
AN23-40A	88044	46	4	AN3CH5A	88044	85	8
AN23-46A	88044	55	89	AN3CH5A	88044	150	15
AN23-7	88044	42	19	AN3CH5A	88044	154	179
AN23-8	88044	42	15	AN3CH6A	88044	112	6
AN23-8	88044	42	18	AN3CH6A	88044	150	103
AN23-8	88044	84	11	AN3CH7A	88044	112	7
AN23-8	88044	84	6	AN3DDH10A	88044	49	
AN23-9	88044	42	14	AN3DDH12A	88044	70	24
AN23-9	88044	50	168	AN3DDH13A	88044	BULK	
AN23-9	88044	122	25	AN3DDH14	88044	119	37
AN23-9	88044	122	29	AN3DDH14A	88044	148	34
AN231-4	88044	49		AN3DDH17A	88044	11	11
AN23878	88044	203	7	AN3DDH20A	88044	11	12
AN23878	88044	205	10	AN3DDH3A	88044	70	2
AN23878	88044	206	76	AN3DDH3A	88044	70	31
AN24-10	88044	45		AN3DDH3A	88044	80	71
AN24-10	88044	45	24	AN3DDH3A	88044	81	54
AN24-10A	88044	BULK		AN3DDH4A	88044	87	91
AN24-11	88044	45	2	AN3DDH4A	88044	109	19
AN24-11	88044	45	5	AN3DDH4A	88044	172	
AN24-12	88044	45		AN3DDH4A	88044	172	96
AN24-16	88044	125		AN3DDH5A	88044	52	50
AN24-17	88044	122	33	AN3DDH5A	88044	84	20
AN24-17	88044	122	36	AN3DDH5A	88044	84	22
AN24-17	88044	BULK		AN3DDH5A	88044	87	92
AN24-18	88044	122	38	AN3DDH5A	88044	109	18
AN24-19	88044	116	43	AN3DDH5A	88044	120	89
AN24-19A	88044	56	70	AN3DDH5A	88044	120	92
AN24-21	88044	116	44	AN3DDH5A	88044	150	93
AN24-24	96906	108	50	AN3DDH6	88044	120	20
AN24-24	88044	BULK		AN3DDH6	88044	BULK	
AN24-26A	88044	116	13	AN3DDH6A	88044	120	91
AN24-26A	88044	116	42	AN3DDH6A	88044	150	38
AN24-26A	88044	117	55	AN3DDH7A	88044	49	
AN24-27A	88044	BULK		AN3DDH7A	88044	49	75
AN24-30A	88044	46	2	AN3DDH7A	88044	49	81
AN24-32A	88044	65	2	AN3DD11A	88044	48	10
AN24-34A	88044	116					
AN24-34A	88044	BULK		AN3H10A	88044	32	212
AN24-50A	88044	BULK		AN3H10A	88044	33	
AN25-13	88044	160	2	AN3H10A	88044	34	13
AN25-13	88044	160	8	AN3H10A	88044	34	20
AN25-17	88044	122	16	AN3H10A	88044	49	10
AN25-20	88044	BULK		AN3H10A	88044	49	4
AN25-23	88044	46		AN3H10A	88044	50	370
AN25-24A	88044	105	65	AN3H10A	88044	52	52
AN25-28A	88044	BULK		AN3H10A	88044	57	18
AN25-29A		KITS		AN3H10A	88044	67	4
AN25-32	88044	BULK		AN3H10A	88044	79	12
AN25-32A	88044	BULK		AN3H10A	88044	79	28
AN25-36	88044	116	11	AN3H10A	88044	79	40
AN25-36	88044	BULK		AN3H10A	88044	80	12
AN253-1-825	88044	132	139	AN3H10A	88044	80	20
AN253-2-3600	88044	50		AN3H10A	88044	81	12
AN253-2-3962	88044	BULK		AN3H10A	88044	81	20
AN2552-3A	88044	138	24	AN3H10A	88044	88	13
AN27-20A	88044	122		AN3H10A	88044	101	12
AN27-32		KITS		AN3H10A	88044	117	18

REFERENCE NUMBER	MFG CODE	FIG NUMBER	ITEM NUMBER	REFERENCE NUMBER	MFG CODE	FIG NUMBER	ITEM NUMBER
AN3H10A	88044	117	42	AN3H3A	88044	150	54
AN3H10A	88044	117	77	AN3H3A	88044	150	56
AN3H10A	88044	118	160	AN3H3A	88044	150	58
AN3H10A	88044	118	60	AN3H3A	88044	154	47
AN3H10A	88044	118	70	AN3H3A	88044	178	27
AN3H10A	88044	122	18	AN3H31A	88044	83	18
AN3H10A	88044	122	23	AN3H32A	88044	78	41
AN3H10A	88044	125	15	AN3H4	88044	77	34
AN3H10A	88044	147	37	AN3H4A	88044	32	213
AN3H10A	88044	178	9	AN3H4A	88044	33	
AN3H11	88044	214A	25	AN3H4A	88044	50	252
AN3H11A	88044	34	21	AN3H4A	88044	55	60
AN3H11A	88044	54	68	AN3H4A	88044	56	111
AN3H11A	88044	57	26	AN3H4A	88044	56	36
AN3H11A	88044	63	3	AN3H4A	88044	56	38
AN3H11A	88044	82	33	AN3H4A	88044	56	48
AN3H11A	88044	88	11	AN3H4A	88044	56	50
AN3H11A	88044	118	101	AN3H4A	88044	56	63
AN3H12	88044	48	37	AN3H4A	88044	56	83
AN3H12A	88044	32	194	AN3H4A	88044	63	2
AN3H12A	88044	34		AN3H4A	88044	63	4
AN3H12A	88044	50	31	AN3H4A	88044	63	7
AN3H12A	88044	101	103	AN3H4A	88044	64	1
AN3H12A	88044	101	65	AN3H4A	88044	74	61
AN3H12A	88044	144	130	AN3H4A	88044	74	62
AN3H12A	88044	145	180	AN3H4A	88044	74	67
AN3H12A	88044	149	17	AN3H4A	88044	74	69
AN3H13	88044	106	64	AN3H4A	88044	75	23
AN3H13	88044	106	65	AN3H4A	88044	75	42
AN3H13A	88044	11	32	AN3H4A	88044	75	74
AN3H13A	88044	34		AN3H4A	88044	75	75
AN3H13A	88044	35	24	AN3H4A	88044	75	83
AN3H13A	88044	44	44	AN3H4A	88044	75	85
AN3H13A	88044	148	21	AN3H4A	88044	78	
AN3H13A	88044	149	18	AN3H4A	88044	78	43
AN3H13A	88044	159	22	AN3H4A	88044	79	179
AN3H13A	88044	159	28	AN3H4A	88044	80	34
AN3H14A	88044	35	32	AN3H4A	88044	81	23
AN3H14A	88044	63	6	AN3H4A	88044	87	82
AN3H14A	88044	64	2	AN3H4A	88044	87	85
AN3H14A	88044	116	38	AN3H4A	88044	91	10
AN3H14A	88044	35A		AN3H4A	88044	104	4
AN3H15A	88044	42	5	AN3H4A	88044	108	15
AN3H15A	88044	42	7	AN3H4A	88044	108	25
AN3H15A	88044	67	16	AN3H4A	88044	108	32
AN3H15A	88044	104	3	AN3H4A	88044	108	8
AN3H15A	88044	170	14	AN3H4A	88044	112	32
AN3H15A	88044	176	46	AN3H4A	88044	112	41
AN3H16A	88044	118	108	AN3H4A	88044	112	52
AN3H16A	88044	118	116	AN3H4A	88044	123	78
AN3H17A	88044	41	97	AN3H4A	88044	123	89
AN3H17A	88044	104	6	AN3H4A	88044	138	
AN3H17A	88044	104	66	AN3H4A	88044	145	10
AN3H20A	88044	67	10	AN3H4A	88044	146	11
AN3H20A	88044	105	54	AN3H4A	88044	147	38
AN3H21	88044	BULK		AN3H4A	88044	148	32
AN3H22A	88044	33	32	AN3H4A	88044	148	36
AN3H22A	88044	148	30	AN3H4A	88044	148	38
AN3H23	88044	104	13	AN3H4A	88044	154	46
AN3H23	88044	104	45	AN3H4A	88044	172	108
AN3H24A	88044	57	23	AN3H40	88044	BULK	
AN3H25	88044	77	35	AN3H44A	88044	54	63
AN3H25A	88044	BULK		AN3H44A	88044	BULK	
AN3H26A	88044	BULK		AN3H45A	88044	54	62
AN3H27A	88044	116	6	AN3H5	88044	39	34
AN3H3A		KITS		AN3H5A	88044	49	2
AN3H3A	88044	11	31	AN3H5A	88044	49	3
AN3H3A	88044	35	37	AN3H5A	88044	49	9
AN3H3A	88044	11D	48	AN3H5A	88044	50	9
AN3H3A	88044	123	77	AN3H5A	88044	51	1
AN3H3A	88044	146	37	AN3H5A	88044	52	1

REFERENCE NUMBER	MFG CODE	FIG NUMBER	ITEM NUMBER	REFERENCE NUMBER	MFG CODE	FIG NUMBER	ITEM NUMBER
AN3H5A	88044	55	4	AN3H6A	88044	117	61
AN3H5A	88044	56	112	AN3H6A	88044	117	63
AN3H5A	88044	56	4	AN3H6A	88044	117	89
AN3H5A	88044	56	78	AN3H6A	88044	118	10
AN3H5A	88044	56	79	AN3H6A	88044	118	100
AN3H5A	88044	56	81	AN3H6A	88044	118	12
AN3H5A	88044	56	82	AN3H6A	88044	118	121
AN3H5A	88044	57	32	AN3H6A	88044	118	21
AN3H5A	88044	57	8	AN3H6A	88044	118	81
AN3H5A	88044	60	3	AN3H6A	88044	119	27
AN3H5A	88044	62	16	AN3H6A	88044	122	19
AN3H5A	88044	62	3	AN3H6A	88044	122	24
AN3H5A	88044	62	8	AN3H6A	88044	132	106E
AN3H5A	88044	70	3	AN3H6A	88044	150	28
AN3H5A	88044	71	2	AN3H7A	88044	44	43
AN3H5A	88044	77	33	AN3H7A	88044	53	2
AN3H5A	88044	80	122	AN3H7A	88044	55	11
AN3H5A	88044	81	105	AN3H7A	88044	55	18
AN3H5A	88044	85		AN3H7A	88044	57	19
AN3H5A	88044	87	84	AN3H7A	88044	69	10
AN3H5A	88044	88	28	AN3H7A	88044	74	65
AN3H5A	88044	91	11	AN3H7A	88044	75	78
AN3H5A	88044	101	15	AN3H7A	88044	79	20
AN3H5A	88044	105	39	AN3H7A	88044	80	31
AN3H5A	88044	108	17	AN3H7A	88044	87	105
AN3H5A	88044	117	100	AN3H7A	88044	87	2
AN3H5A	88044	117	109	AN3H7A	88044	87	39
AN3H5A	88044	117	44	AN3H7A	88044	88	26
AN3H5A	88044	117	59	AN3H7A	88044	101	59
AN3H5A	88044	118	129	AN3H7A	88044	101	69
AN3H5A	88044	118	139	AN3H7A	88044	101	97
AN3H5A	88044	118	16	AN3H7A	88044	105	2
AN3H5A	88044	118	29	AN3H7A	88044	105	44
AN3H5A	88044	118	3	AN3H7A	88044	107	105
AN3H5A	88044	118	39	AN3H7A	88044	117	
AN3H5A	88044	118	75	AN3H7A	88044	117	110
AN3H5A	88044	118	83	AN3H7A	88044	117	22
AN3H5A	88044	122		AN3H7A	88044	117	24
AN3H5A	88044	122	20	AN3H7A	88044	117	48
AN3H5A	88044	122	22	AN3H7A	88044	117	50
AN3H5A	88044	146	10	AN3H7A	88044	117	52
AN3H5A	88044	154	38	AN3H7A	88044	117	79
AN3H5A	88044	154	48	AN3H7A	88044	117	83
AN3H5A	88044	165	46	AN3H7A	88044	117	85
AN3H5A	88044	169	83	AN3H7A	88044	118	134
AN3H5A	88044	182	17	AN3H7A	88044	118	34
AN3H5A	88044	182	3	AN3H7A	88044	118	76
AN3H5A	88044	BULK		AN3H7A	88044	118	88
AN3H6	88044	BULK		AN3H7A	88044	125	10
AN3H6A	88044	41	9	AN3H7A	88044	125	14
AN3H6A	88044	51	2	AN3H7A	88044	138	
AN3H6A	88044	52	2	AN3H7A	88044	152	35
AN3H6A	88044	56	22	AN3H7A	88044	159	21
AN3H6A	88044	60	2	AN3H7A	88044	159	27
AN3H6A	88044	71	12	AN3H7A	88044	170	13
AN3H6A	88044	72	18	AN3H7A	88044	178	12
AN3H6A	88044	73	2	AN3H7A	88044	214A	35
AN3H6A	88044	75	43	AN302-16-8		KITS	
AN3H6A	88044	85	28	AN3021-1	88044	130	
AN3H6A	88044	88	14	AN3021-1	88044	130	29
AN3H6A	88044	88	29	AN3021-1	88044	130	40
AN3H6A	88044	88	30	AN3021-1	88044	131	35
AN3H6A	88044	89	2	AN3021-1	88044	132	49
AN3H6A	88044	102	33	AN3021-1	88044	133	5
AN3H6A	88044	104	67	AN3021-1	88044	133	9
AN3H6A	88044	104	7	AN3025-300	88044	129	26
AN3H6A	88044	107	106	AN3025-300	88044	138	19
AN3H6A	88044	115		AN3030-9A	88044	138	2
AN3H6A	88044	116	3	AN3030-9A	88044	138	4
AN3H6A	88044	117	113	AN3030-9A	88044	139	2
AN3H6A	88044	117	28	AN3030-9A	88044	139	4

REFERENCE NUMBER	MFG CODE	FIG NUMBER	ITEM NUMBER	REFERENCE NUMBER	MFG CODE	FIG NUMBER	ITEM NUMBER
AN3030-9A	88044	150		AN316-12		KITS	
AN3033-12	88044	129		AN316-4R		KITS	
AN3033-9	88044	129		AN316-4R	88044	51	
AN3033-9	88044	134	1	AN316-4R	88044	52	
				AN316-4R	88044	55	56
AN3040-1B	88044	138	3	AN316-4R	88044	69	8
AN3040-1B	88044	139	3	AN316-4R	88044	88	15
AN3040-1B	88044	150	4	AN316-4R	88044	90	12
AN3040-3B	88044	150	7	AN316-4R	88044	90	17
AN3040-4B	88044	138	1	AN316-4R	88044	90	8
AN3040-4B	88044	139	1	AN316-4R	88044	92	2
AN3042-1	88044	134	4	AN316-4R	88044	101	112
AN3042-2	88044	134		AN316-4R	88044	101	28
AN3054-16		KITS		AN316-5R	88044	108	43
AN3054-16	88044	175A	109	AN316-5R	88044	214A	241
AN3066-16	88044	132	44	AN316-6L	88044	38	16
AN3092-3	88044	129	10	AN316-6L	88044	38	8
AN3092-3	88044	134	6	AN316-6R	88044	38	14
AN3093-1	88044	129	14	AN316-6R	88044	38	6
AN3093-1	88044	134	10	AN316-6R	88044	68	9
AN310-3		KITS		AN316-6R	88044	87	
AN310-3	88044	104		AN316-6R	88044	87	100
AN310-3	88044	175E		AN316-6R	88044	87	114
AN310-3	88044	214A	515	AN316-6R	88044	87	126
AN310-4		KITS		AN316-6R	88044	87	130
AN310-4	88044	38		AN316-6R	88044	87	136
AN310-4	88044	90	23	AN316-6R	88044	87	144
AN310-4	88044	96		AN316-6R	88044	87	155
AN310-4	88044	169		AN316-6R	88044	87	20
AN310-4	88044	35A	12	AN316-6R	88044	87	26
AN310-4	88044	125B	4	AN316-6R	88044	87	42
AN310-4	88044	125B	6	AN316-6R	88044	87	48
AN310-4	88044	214A	261	AN316-6R	88044	87	66
AN310-5		KITS		AN316-6R	88044	87	72
AN310-5	88044	21	16A	AN316-6R	88044	88	5
AN310-5	88044	101		AN316-6R	88044	123	64
AN310-5	88044	214A	298	AN316-6R	88044	159	15
AN310-6		KITS		AN316-6R	88044	159	3
AN310-6	88044	15	2	AN316-6R	88044	159	33
AN310-6	88044	16		AN316-6R	88044	159	8
AN310-6	88044	158	23	AN316-6R	88044	169	28
AN310-6	88044	214A	553	AN316-6R	88044	169	31
AN310-6	88044	214A	559	AN316-6R	88044	169	41
AN310-7		KITS		AN316-6R	88044	169	44
AN310-7	88044	16		AN316-6R	88044	175G	12
AN310-8	88044	38	25	AN316-7R	88044	106	116
AN310-8	88044	167		AN316C4L	88044	160	3
AN310C4	88044	214A	445	AN316C4L	88044	160	5
AN310C5	88044	42		AN316C4R	88044	41	56
AN310C5	88044	212A	196	AN316C6R	88044	BULK	
AN310C6	88044	150		AN320-3		KITS	
AN310D5	88044	68		AN320-3	88044	42	
AN3102A		KITS		AN320-3	88044	87	
AN3102A14S9P		KITS		AN320-3	88044	104	
AN3102E28-15S	88044	130	5	AN320-3	88044	107	
AN3102M14S2P		KITS		AN320-3	88044	107	
AN3110-4	88044	134	15	AN320-3	88044	108	
AN3117-1	88044	BULK		AN320-3	88044	122	
AN3119-2	88044	134	14	AN320-3	88044	214A	23
AN315-3R	88044	104		AN320-3	88044	214A	33
AN315-3R	88044	105	5	AN320-4		KITS	
AN315-4R	88044	190	54	AN320-4	88044	26	
AN315-7R		KITS		AN320-4	88044	45	
AN315-7R	88044	12	14	AN320-4	88044	87	
AN315C6R	88044	188	40	AN320-4	88044	87	
AN3150-2	88044	140	17	AN320-4	88044	87	
AN3150-2	88044	141	29	AN320-4	88044	87	
AN3156-3	88044	140	14	AN320-4	88044	87	
AN3156-3	88044	141	26	AN320-4	88044	87	
AN3156-3	88044	141	35	AN320-4	88044	87	
AN316-10R	88044	BULK		AN320-4	88044	87	

REFERENCE NUMBER	MFG CODE	FIG NUMBER	ITEM NUMBER	REFERENCE NUMBER	MFG CODE	FIG NUMBER	ITEM NUMBER
AN320-4	88044	87		AN340-8	88044	104	16
AN320-4	88044	88		AN340-8	88044	104	48
AN320-4	88044	88		AN340B4	88044	114F	103
AN320-4	88044	88		AN340B4	88044	114F	99
AN320-4	88044	91		AN340C2	88044	112	
AN320-4	88044	91		AN3420-12	88044	BULK	
AN320-4	88044	93		AN3420-3	88044	25	
AN320-4	88044	101		AN3436-2-1	88044	131	
AN320-4	88044	102		AN3436-2-1	88044	132	
AN320-4	88044	104		AN3436-2-12	88044	132	
AN320-4	88044	107		AN3436-2-12	88044	139	11
AN320-4	88044	122		AN3436-2-2	88044	128	14
AN320-4	88044	122		AN3436-2-2	88044	131	
AN320-4	88044	152		AN3436-2-3	88044	131	
AN320-4	88044	153		AN3436-2-5	88044	129	
AN320-4	88044	158		AN3436-2-5	88044	131	
AN320-4	88044	158					
AN320-4	88044	159		AN3436-2-7	88044	131	
AN320-5		KITS		AN3436-2-7	88044	132	
AN320-5	88044	102		AN3436-24	88044	131	
AN320-5	88044	103		AN345-4		KITS	
AN320-5	88044	105		AN3533-1	88044	132	106D
AN320-5	88044	153		AN3533-1	88044	138	
AN320-5	88044	159		AN354-16		KITS	
AN320-5	88044	160		AN355-4		KITS	
AN320-6		KITS		AN355-4	88044	175D	3
AN320-6	88044	12		AN362C428	88044	BULK	
AN320-6	88044	21	24	AN362C524	88044	BULK	
AN320-6	88044	21	53	AN362C832	88044	37	17
AN320-7		KITS					
AN320-7		KITS		AN3632-1A	88044	11	20
AN320-7	88044	12		AN3633-1	88044	11	
AN320-7	88044	12	12	AN3633-1A	88044	11	
AN320-7	88044	13		AN364-1018	88044	83	21
AN320-7	88044	14		AN364-1032		KITS	
AN320-7	88044	162		AN364-524		KITS	
AN320-8		KITS		AN364-820C	88044	12	3
AN320-8	88044	12		AN364-820C	88044	36	25
AN320-8	88044	38	48	AN364-820C	88044	84	32
AN320-8	88044	162		AN364-832C		KITS	
AN320C6	88044	39	7	AN364-836		KITS	
AN320C6	88044	214A	227	AN364-836A	88044	90A	3
AN320D8	88044	107		AN365-1032		KITS	
AN3203V30	88044	114		AN365-1032	88044	118	
AN3204-2	88044	139	30	AN365-1032C		KITS	
AN3206-1	88044	138		AN365-632		KITS	
AN3206-1	88044	139		AN365-632C		KITS	
AN3209-1	88044	138	5	AN365-640A	88044	78A	
AN3209-1	88044	139	5	AN365-820		KITS	
AN3212-1	88044	128	21	AN365-832C		KITS	
AN3219-1	88044	113		AN365-836	88044	175D	27
AN3219-1	88044	114		AN365D440C		KITS	
AN3227-1	88044	130		AN365D624		KITS	
AN3234-3	88044	58		AN366DF632A	88044	131	51
AN325B6		KITS		AN366DF632A	88044	132	75
AN3314-1	88044	130	78	AN366DF632A	88044	150	122
AN3314-1	88044	132	144	AN370-5	88044	122	
AN3314-1	88044	138	27	AN380-2-1		KITS	
AN3320-1	88044	130	7	AN380-2-2		KITS	
AN3324-1	88044	138		AN380-2-3		KITS	
AN3324-1	88044	138	52	AN380-3-3		KITS	
AN3324-1	88044	139	47	AN381-1-16	88044	85B	33
AN340-2	88044	113B	16	AN381-1-16	88044	85B	5
AN340-4		KITS		AN381-1-16		KITS	
AN340-416		KITS		AN381-2-10		KITS	
AN340-6	88044	128A	45	AN381-2-10		KITS	
AN340-6	88044	128A	54	AN381-2-12		KITS	
AN340-8		KITS		AN381-2-20		KITS	
AN340-8		KITS		AN381-2-32	88044	BULK	
AN340-8	88044	18		AN381-2-6		KITS	
AN340-8	88044	41		AN381-2-8		KITS	

REFERENCE NUMBER	MFG CODE	FIG NUMBER	ITEM NUMBER	REFERENCE NUMBER	MFG CODE	FIG NUMBER	ITEM NUMBER
AN381-3-10		KITS		AN4DDH11A	88044	41	171
AN381-3-12		KITS		AN4DDH11A	88044	41	175
AN381-3-16		KITS		AN4DDH11A	88044	41	180
AN381-3-16	88044	175D	63	AN4DDH11A	88044	41	184
AN381-3-8		KITS		AN4DDH11A	88044	87	123
AN381-4-12		KITS		AN4DDH12A	88044	41	170
AN381-5-20	88044	BULK		AN4DDH12A	88044	41	179
AN381-5-24	88044	BULK		AN4DDH3A	88044	83	11
AN385A40P8	88044	48		AN4DDH36A	88044	BULK	
AN385A40P8	88044	48	20	AN4DDH4A	88044	138	
AN386-1-15	88044	107	15	AN4DDH5A	88044	79	23
AN386-1-15	88044	107	18	AN4DDH5A	88044	84	24
AN386-1-6	88044	170	16	AN4DDH7A	88044	41	174
AN386-1-6	88044	170	19	AN4DDH7A	88044	48	17
AN386-1-6A	88044	70	11	AN4DDH7A	88044	49	
AN386-1-7A	88044	57	34	AN4DDH7A	88044	84	31
AN386-1-7A	88044	71	7	AN4DD26A	88044	32	162
AN386-1-7A	88044	71	9	AN4H10	88044	41	123
AN386-1-7A	88044	72	2	AN4H10	88044	41	124
AN386-1-9A	88044	97	30	AN4H10	88044	76	26
AN386-2-10A	88044	BULK		AN4H10	88044	76	65
AN386-2-13	88044	87	7	AN4H10	88044	174	5
AN386-2-13A	88044	101	32	AN4H10	88044	174	9
AN386-2-13A	88044	101	38	AN4H10A	88044	41	
AN386-2-14A	88044	73	10	AN4H10A	88044	56	103
AN386-2-14A	88044	73	8	AN4H10A	88044	72	1
AN386-2-18A	88044	BULK		AN4H10A	88044	79	89
AN386-2-7A	88044	55	67	AN4H10A	88044	81	118
AN386-2-7A	88044	55	69	AN4H10A	88044	87	110
AN386-2-7A	88044	62	21	AN4H10A	88044	101	70
AN386-2-7A	88044	62	23	AN4H10A	88044	107	11
AN386-3-14	88044	104		AN4H10A	88044	108	22
AN386-3-16		KITS		AN4H10A	88044	108	29
AN386-3-16	88044	158	16	AN4H10A	88044	115	37
AN386-3-17		KITS		AN4H10A	88044	125	11
AN386-3-18		KITS		AN4H11A	88044	51	23
AN386-3-18	88044	158	30	AN4H11A	88044	52	
AN386-3-19A	88044	93	20	AN4H11A	88044	52	20
AN386-3-19A	88044	93	40	AN4H11A	88044	56	102
AN392-19		KITS		AN4H11A	88044	56	68
AN392-23		KITS		AN4H11A	88044	79	147
AN392-35		KITS		AN4H11A	88044	82	2
				AN4H11A	88044	82	7
				AN4H11A	88044	82	72
AN393-33		KITS		AN4H11A	88044	101	18
AN394-37		KITS		AN4H11A	88044	105	11
AN4-11A	88044	101	71	AN4H12	88044	BULK	
AN4-11A	88044	179	24	AN4H12A	88044	66	12
AN4-17		KITS		AN4H12A	88044	67	19
AN4-21		KITS		AN4H12A	88044	79	142
AN4-30A		KITS		AN4H12A	88044	79	148
AN4-6		KITS		AN4H12A	88044	79	5
AN4-7		KITS		AN4H12A	88044	80	5
AN4CH10	88044	BULK		AN4H12A	88044	81	5
AN4CH10A	88044	39	31	AN4H12A	88044	82	22
AN4CH11	88044	39	30	AN4H12A	88044	107	31
AN4CH11	88044	BULK		AN4H12A	88044	129	21
AN4CH16A	88044	BULK		AN4H12A	88044	155	23
AN4CH17A	88044	BULK		AN4H12A	88044	155	7
AN4CH20A	88044	171	10	AN4H12A	88044	176	31
AN4CH20A	88044	171	2	AN4H13	88044	76	20
AN4CH20A	88044	171	4	AN4H13A	88044	76	59
AN4CH20A	88044	171	6	AN4H13A	88044	79	57
AN4CH20A	88044	171	8	AN4H13A	88044	152	12
AN4CH21A	88044	85	7	AN4H14	88044	38	13
AN4CH21A	88044	BULK		AN4H14A	88044	64	4
AN4CH4A	88044	176	16	AN4H14A	88044	82	21
AN4CH4A	88044	176	19	AN4H14A	88044	107	30
AN4CH6A	88044	109	29	AN4H14A	88044	108	5
AN4C7A	88044	39	32	AN4H15A	88044	87	106
AN4DDH10A	88044	BULK		AN4H15A	88044	107	28

REFERENCE NUMBER	MFG CODE	FIG NUMBER	ITEM NUMBER	REFERENCE NUMBER	MFG CODE	FIG NUMBER	ITEM NUMBER
AN4H15A	88044	176	27	AN4H34A	88044	165	36
AN4H16	88044	BULK		AN4H35A	88044	11	34
AN4H16A	88044	79	82	AN4H36A	88044	70	4
AN4H16A	88044	80	133	AN4H36A	88044	70	8
AN4H16A	88044	80	89	AN4H4A	88044	41	65
AN4H16A	88044	81	116	AN4H4A	88044	75	10
AN4H16A	88044	81	72	AN4H4A	88044	75	17
AN4H16A	88044	82	58	AN4H4A	88044	79	145
AN4H16A	88044	82	64	AN4H4A	88044	79	15
AN4H16A	88044	82	68	AN4H4A	88044	79	30
AN4H16A	88044	116	37	AN4H4A	88044	79	42
AN4H16A	88044	117	32	AN4H4A	88044	80	15
AN4H16A	88044	117	68	AN4H4A	88044	80	26
AN4H16A	88044	117	8	AN4H4A	88044	80	42
AN4H16A	88044	117	97	AN4H4A	88044	81	15
AN4H16A	88044	118	124	AN4H4A	88044	81	31
AN4H16A	88044	118	17	AN4H4A	88044	83	15
AN4H16A	88044	118	4	AN4H4A	88044	104	100
AN4H16A	88044	118	71	AN4H4A	88044	104	65
AN4H16A	88044	119	19	AN4H43A	88044	59	6
AN4H16A	88044	151	1	AN4H5	88044	76	56
AN4H16A	88044	151	5	AN4H5A		KITS	
AN4H16A	88044	151	9	AN4H5A	88044	12	48
AN4H16A	88044	155	19	AN4H5A	88044	76	14
AN4H17A	88044	79	141	AN4H5A	88044	78	22
AN4H17A	88044	117	106	AN4H5A	88044	78	27
AN4H17A	88044	117	54	AN4H5A	88044	79	161
AN4H17A	88044	118	5	AN4H5A	88044	79	171
AN4H17A	88044	118	72	AN4H5A	88044	82	57
AN4H17A	88044	120		AN4H5A	88044	82	67
AN4H20A	88044	56	107	AN4H5A	88044	117	102
AN4H20A	88044	56	41	AN4H5A	88044	117	20
AN4H20A	88044	56	43	AN4H5A	88044	117	46
AN4H20A	88044	60	8	AN4H5A	88044	117	81
AN4H20A	88044	117	10	AN4H5A	88044	118	126
AN4H20A	88044	117	33	AN4H5A	88044	118	19
AN4H20A	88044	117	35	AN4H5A	88044	118	79
AN4H20A	88044	117	67	AN4H5A	88044	118	8
AN4H20A	88044	117	7	AN4H5A	88044	138	15
AN4H20A	88044	117	70	AN4H5A	88044	151	
AN4H20A	88044	117	98	AN4H5A	88044	151	2
AN4H20A	88044	144	14	AN4H5A	88044	151	6
AN4H20A	88044	145	28	AN4H5A	88044	157	26
AN4H21A	88044	65	8	AN4H5A	88044	162	45
AN4H21A	88044	117	34	AN4H5A	88044	165	65
AN4H21A	88044	117	69	AN4H50A	88044	153	25
AN4H21A	88044	117	9	AN4H52A	88044	BULK	
AN4H21A	88044	120		AN4H53A	88044	11	35
AN4H21A	88044	120	83	AN4H6	88044	76	33
AN4H21A	88044	165	45	AN4H6	88044	76	49
AN4H22	88044	21	42	AN4H6	88044	76	72
AN4H22A	88044	66	3	AN4H6A	88044	51	17
AN4H22A	88044	90	30	AN4H6A	88044	51	21
AN4H22A	88044	90	32	AN4H6A	88044	52	26
AN4H23A	88044	96	46	AN4H6A	88044	52	27
AN4H24A	88044	70	17	AN4H6A	88044	52	45
AN4H24A	88044	107	29	AN4H6A	88044	52	47
AN4H25	88044	BULK		AN4H6A	88044	67	11
AN4H25A	88044	61	4	AN4H6A	88044	67	14
AN4H25A	88044	96	47	AN4H6A	88044	78	26
AN4H25A	88044	165	33	AN4H6A	88044	79	2
AN4H26A	88044	35	34	AN4H6A	88044	80	112
AN4H27A	88044	60	12	AN4H6A	88044	80	119
AN4H3A		KITS		AN4H6A	88044	80	126
AN4H3A	88044	84	17	AN4H6A	88044	80	140
AN4H3A	88044	176	83	AN4H6A	88044	80	2
AN4H30A	88044	12	33	AN4H6A	88044	80	73
AN4H32A	88044	56	30	AN4H6A	88044	80	80
AN4H32A	88044	69	13	AN4H6A	88044	80	87
AN4H32A	88044	69	3	AN4H6A	88044	81	102
AN4H33A	88044	61	13	AN4H6A	88044	81	109

REFERENCE NUMBER	MFG CODE	FIG NUMBER	ITEM NUMBER	REFERENCE NUMBER	MFG CODE	FIG NUMBER	ITEM NUMBER
AN4H6A	88044	81	2	AN5DDH7	88044	BULK	
AN4H6A	88044	81	56	AN5H10	88044	41	126
AN4H6A	88044	81	70	AN5H10	88044	125	2
AN4H6A	88044	81	95	AN5H10	88044	162	43
AN4H6A	88044	82	5	AN5H11	88044	21	16
AN4H6A	88044	82	74	AN5H11	88044	82	24
AN4H6A	88044	102	34	AN5H11	88044	83	27
AN4H6A	88044	155	22	AN5H12	88044	23	17
AN4H6A	88044	155	25	AN5H12	88044	125	7
AN4H6A	88044	155	9	AN5H12	88044	170	3
AN4H60A	88044	89	3	AN5H13	88044	38	20
AN4H7A	88044	37	32	AN5H13	88044	74	18
AN4H7A	88044	41	10	AN5H14	88044	37	19
AN4H7A	88044	51	25	AN5H15	88044	75	31
AN4H7A	88044	79	51	AN5H15	88044	91	36
AN4H7A	88044	80	137	AN5H15A		KITS	
AN4H7A	88044	81	120	AN5H17	88044	150	88
AN4H7A	88044	82	3	AN5H20	88044	BULK	
AN4H7A	88044	82	50	AN5H21	88044	119	41
AN4H7A	88044	107	10	AN5H21	88044	119	42
AN4H7A	88044	153	3	AN5H22	88044	BULK	
AN4H7A	88044	155	2	AN5H25	88044	BULK	
AN4044-1	88044	32	176	AN5H26	88044	82	10
AN4044-1	88044	181	32	AN5H26	88044	82	26
AN4044-1	88044	206	62	AN5H26	88044	82	35
AN4047-1	88044	11	26	AN5H26	88044	82	52
AN4047-1	88044	175	10	AN5H26	88044	82	76
AN4059-1	88044	175	4	AN5H26	88044	151	13
AN4062-11	88044	BULK		AN5H26	88044	151	19
AN4076-1	88044	190	41	AN5H26	88044	155	11
AN4116R3B	88044	175		AN5H26	88044	155	27
AN4116R3FA	88044	175	8	AN5H30	88044	BULK	
AN4164-12	88044	213		AN5H31	88044	22	2
AN4171-16	88044	182	15	AN5H32	88044	105	60
AN4181-1	88044	128	9	AN5H4	88044	173	36
AN42-4	88044	182	18	AN5H5	88044	25	80
AN42-7	88044	74	64	AN5H5	88044	176	15
AN42-7	88044	75	77	AN5H5A		KITS	
AN42-7	88044	BULK		AN5H6A	88044	76	10
AN42B10	88044	173	40	AN5H7	88044	BULK	
AN42B3	88044	140	13	AN500-4-4		KITS	
AN42B3	88044	141	24	AN500-4-7		KITS	
AN42B5	88044	182	19	AN500-6-10	88044	57	14
AN42B5	88044	BULK		AN500-6-6		KITS	
AN426AD3-9	88044	188	25	AN500-6-8		KITS	
AN426AD6-14		KITS		AN500-8-10		KITS	
AN426AD6-7		KITS		AN500-8-12	88044	KITS	
AN427-6-8		KITS		AN500AC10-7		KITS	
AN43-7	88044	119	16	AN500AC2-4	88044	112	16
AN43-7	88044	BULK		AN500AD8-16	88044	BULK	
AN43B10	88044	BULK		AN500AG3		KITS	
AN43B13	88044	119	28	AN500A10-10		KITS	
AN43B15	88044	119	30	AN500A10-24		KITS	
AN435M4-10	88044	47	4	AN500A10-4		KITS	
AN44-11	88044	BULK		AN500A10-7		KITS	
AN4415A	88044	176	23	AN500A2-3		KITS	
AN455A3-6		KITS		AN500A2-3	88044	95	3
AN461-4-16	88044	BULK		AN500A2-3	88044	90A	21
AN461-4-8	88044	BULK		AN500A2-8	88044	78A	
AN470AD5	88044	153	8	AN500A3-5	88044	BULK	
AN486-2	88044	67	13	AN500A4-10	88044	94	8
AN490HT10R	88044	BULK		AN500A4-12	88044	94	2
AN5-11		KITS		AN500A4-4		KITS	
AN5-12A		KITS		AN500A4-4	88044	44C	28
AN5-31A		KITS		AN500A4-4	88044	90A	1
AN5CH13A	88044	169	5	AN500A4-4	88044	90A	2
AN5CH15	88044	169	6	AN500A4-4	88044	90A	45
AN5CH24	88044	42	2				
AN5CH7	88044	84	44				
AN5DDH4	88044	BULK		AN500A4-7		KITS	
AN5DDH6	88044	BULK		AN500A4-8		KITS	

REFERENCE NUMBER	MFG CODE	FIG NUMBER	ITEM NUMBER	REFERENCE NUMBER	MFG CODE	FIG NUMBER	ITEM NUMBER
AN500A4-8	88044	87	56	AN501A10-7		KITS	
AN500A4-8	88044	87	61	AN501A10-8		KITS	
AN500A4-8	88044	128		AN501A416-5		KITS	
AN500A4-8	88044	125A	59	AN501A8-14		KITS	
AN500A416-10		KITS		AN501B1-10	88044	114E	49
AN500A6-10	88044	BULK		AN501B1-10	88044	114F	86
AN500A6-12	88044	96	34	AN501B1-10	88044	114G	52
AN500A6-12	88044	106	9	AN501B1-2	88044	114F	79
AN500A6-3		KITS		AN501B1-2	88044	114G	68
AN500A6-3	88044	KITS		AN501B1-2	88044	114H	68
AN500A6-3		KITS		AN501B1-2	88044	114J	55
AN500A6-4		KITS		AN501B1-4	88044	114H	79
AN500A6-6		KITS		AN501B1-4	88044	114J	65
AN500A6-7		KITS		AN501B1-6	88044	114E	87
AN500A8		KITS		AN501B1-6	88044	114F	100
AN500A8-10		KITS		AN501B1-6	88044	114G	80
AN500A8-12		KITS		AN501B3-4		KITS	
AN500A8-28	88044	39	28	AN501B3-4	88044	113C	26
AN500A8-4		KITS		AN501B6-5		KITS	
AN500A8-5		KITS		AN501C0-2	88044	113F	
AN500A8-6		KITS		AN501C0-2	88044	113F	102
AN500A8-6	88044	KITS		AN501C0-2	88044	113F	222
AN500A8-6		KITS		AN5012-50	88044	186	
AN500A8-7		KITS				KITS	
AN500B2-2	88044	114G	121			KITS	
AN500B2-3	88044	114E	79		88044	11	15
AN500B2-3	88044	114E	95		88044	12	6
AN500B2-3	88044	114F	38		88044	12	7
AN500B2-3	88044	114F	64		88044	72	15
AN500B2-3	88044	114F	95		88044	102	7
AN500B2-3	88044	114G	108		88044	105	36
AN500B2-3	88044	114G	73	AN502-10-12		KITS	
AN500B2-3	88044	114H	104	AN502-10-12	88044	11D	52
AN500B2-3	88044	114H	73	AN502-10-12	88044	BULK	
AN500B2-3	88044	114J	59	AN502-10-12	88044	213B	3
AN500B2-3	88044	114J	89	AN502-10-14	88044	79	131
AN500B2-4	88044	44C	33	AN502-10-14	88044	106	87
AN500B4-3	88044	114F	34	AN502-10-16	88044	BULK	
AN500B4-4	88044	114E	5	AN502-10-16	88044	175D	29
AN500B4-4	88044	114G	5	AN502-10-18	88044	44C	4
AN500B4-4	88044	114H	6	AN502-10-26	88044	BULK	
AN500B4-4	88044	114J	4	AN502-10-4	88044	178	57
AN500B4-5	88044	114E	41	AN502-10-6	88044	16	18
AN500B4-5	88044	114E	54	AN502-10-6	88044	17	37
AN500B4-5	88044	114F	67	AN502-10-6	88044	32	191
AN500B4-5	88044	114F	70	AN502-10-6	88044	72	11
AN500B4-5	88044	114G	44	AN502-10-6	88044	72	8
AN500B4-5	88044	114G	58	AN502-10-6	88044	145	177
AN500B4-5	88044	114G	64	AN502-10-6	88044	186	2
AN500B4-5	88044	114H	38	AN502-10-6	88044	190	
AN500B4-5	88044	114H	58	AN502-10-8	88044	26	
AN500B4-5	88044	114H	64	AN502-416-16	88044	BULK	
AN500B4-5	88044	114J	30	AN502-416-6	88044	23	28
AN500B4-5	88044	114J	45	AN502-6-8	88044	154	11
AN500B4-5	88044	114J	51	AN502B3-3		KITS	
AN501-10-16		KITS		AN5025-1	88044	174	18
AN501-10-16	88044	11D	27	AN503-10-10	88044	18	
AN501-4-2		KITS		AN503-10-10	88044	175H	31
AN501-4-3		KITS		AN503-10-10	88044	214A	221
AN501-4-3	88044	44C	30	AN503-10-10	88044	214A	271
AN501-4-6		KITS		AN503-10-10	88044	214A	300
AN501-416-6		KITS		AN503-10-10	88044	214A	531
AN501-8-12	88044	BULK		AN503-10-10	88044	214A	538
AN501AB10-5	88044	175A	30	AN503-10-12	88044	83A	11
AN501AC10-40		KITS		AN503-10-12	88044	214A	155
AN501AC10-40	88044	175A	33	AN503-10-12	88044	214A	157
AN501A10-10		KITS		AN503-10-26	88044	78	14
AN501A10-12		KITS		AN503-10-26	88044	175H	10
AN501A10-16		KITS		AN503-10-6		KITS	
AN501A10-4		KITS		AN503-10-6		KITS	
AN501A10-6		KITS		AN503-10-6	88044	18	1

REFERENCE NUMBER	MFG CODE	FIG NUMBER	ITEM NUMBER	REFERENCE NUMBER	MFG CODE	FIG NUMBER	ITEM NUMBER
AN503-10-6	88044	58	25	AN505-10R32	88044	BULK	
AN503-10-6	88044	78	33	AN505-4-22		KITS	
AN503-10-6	88044	11D	16	AN505-4-3		KITS	
AN503-10-6	88044	11D	37	AN505-4-4		KITS	
AN503-10-6	88044	149	20	AN505-4-4	88044	KITS	
AN503-10-6	88044	123B	8	AN505-4-4		KITS	
AN503-10-8		KITS		AN505-4-6		KITS	
AN503-10-8	88044	78	15	AN505-4R8	88044	129	11
AN503-10-8	88044	78	24	AN505-4R8	88044	134	7
AN503-10-8	88044	78	30	AN505-6-5		KITS	
AN503-10-8	88044	92	4	AN505-6R6	88044	175A	
AN503-10-8	88044	125A	62	AN505-6R6	88044	175A	10
AN503-10-8	88044	175B	28	AN505-8-13		KITS	
AN503-10-8	88044	175C	35	AN505-8-6		KITS	
AN503-416-12	88044	214A	16	AN505-8R18		KITS	
AN503-516-12	88044	BULK		AN505-8R18	88044	90A	7
AN503-6-4	88044	79A	44	AN505-8R18	88044	BULK	
AN503-6-6	88044	11	6	AN505-8R20		KITS	
AN503-6-6	88044	77	20	AN505C2-3		KITS	
AN503-6-6	88044	96	28	AN505DD4-4	88044	109	13
AN503-6-6	88044	136	26	AN505DD4-9	88044	114F	58
AN503-6-6	88044	136	35	AN505DD6-12	88044	114	
AN503-6-6	88044	136	4	AN505DD6-20	88044	113	
AN503-6-6	88044	136	55	AN505DD6-20	88044	114	
AN503-6-6	88044	136	8	AN505PB2-11	88044	113B	114
AN503-6-6	88044	123A	17	AN507-428-8		KITS	
AN503-6-6	88044	123A	34	AN507-440-8	88044	128A	21
AN503-6-6	88044	123A	6	AN507-440R4	88044	79A	73
AN503-6-6	88044	123B	52	AN507-440R4	88044	81A	41
AN503-6-8	88044	94	20	AN507-440R4	88044	90A	33
AN503-6-8	88044	128		AN507-440R5	88044	BULK	
AN503-6-8	88044	130	43	AN507-440R6	88044	113B	93
AN503-8-10		KITS		AN507-440R6	88044	128A	116
AN503-8-10	88044	84	38	AN507-632R14	88044	128A	9
AN503-8-10	88044	94	11	AN507-632R20	88044	128A	66
AN503-8-10	88044	11D		AN507-632R8	88044	128A	121
AN503-8-10	88044	79B	2	AN507-632R8	88044	128A	43
AN503-8-10	88044	123B	24	AN507-632R8	88044	128A	52
AN503-8-10	88044	123B	56	AN507-832-14	88044	44C	42
AN503-8-10	88044	175B	21	AN507-832R5		KITS	
AN503-8-10	88044	175F	21	AN507C440-10	88044	138	
AN503-8-10	88044	214A	108	AN507C440-10	88044	139	
AN503-8-12		KITS		AN507C440-10	88044	150	5
AN503-8-12	88044	100	31	AN507C440-10	88044	150	8
AN503-8-12	88044	79B	3	AN507C440R3	88044	44B	19
AN503-8-12	88044	175A	96	AN507DD1032R8	88044	127	12
AN503-8-14	88044	BULK		AN507DD1032R8	88044	127	14
AN503-8-16	88044	94	5	AN507DD1032R8	88044	127	16
AN503-8-4	88044	68	2	AN507DD1032R8	88044	127	18
AN503-8-4	88044	175A	29	AN507DD1032R8	88044	127	2
AN503-8-4	88044	212A	20	AN507DD1032R8	88044	127	20
AN503-8-4	88044	214A	399	AN507DD1032R8	88044	127	4
AN503-8-6		KITS		AN507DD1032R8	88044	127	6
AN503-8-6	88044	34	27	AN507DD1032R8	88044	127	8
AN503-8-6	88044	39	17	AN508-6-4	88044	81A	36
AN503-8-6	88044	101	21	AN509-10-14		KITS	
AN503-8-6	88044	11D	33	AN509-416-13		KITS	
AN503-8-6	88044	11D	5	AN509C8R7	88044	41	211
AN503-8-6	88044	11D	56	AN510-10-7		KITS	
AN503-8-6	88044	11D	8	AN510-10-7	88044	11D	63
AN503-8-6	88044	116	31	AN510-10-7	88044	11D	66
AN503-8-6	88044	149	23	AN510-4-26		KITS	
AN503-8-6	88044	178	19	AN515-2-12	88044	128A	74
AN503-8-6	88044	79A	21	AN515-4-11	88044	131	
AN503-8-6	88044	81A	7		88044	131	
AN503-8-6	88044	175A					
AN503-8-8	88044	58	18				
AN503-8-8	88044	78	36				
AN503-8-8	88044	106	34	AN515-5-5	88044	114E	28
AN505-10-10	88044	175E	25	AN515-5-5	88044	114F	27
AN505-10-8		KITS		AN515-5-5	88044	114G	25

REFERENCE NUMBER	MFG CODE	FIG NUMBER	ITEM NUMBER	REFERENCE NUMBER	MFG CODE	FIG NUMBER	ITEM NUMBER
AN515-5-5	88044	114H	28	AN525-10R8	88044	49	22
AN515-5-5	88044	114J	22	AN525-10R8	88044	49	23
AN515-5R4	88044	212A	119	AN525-10R8	88044	49	25
AN515-6-20	88044	104	17	AN525-10R8	88044	49	27
AN515-6-20	88044	104	49	AN525-10R8	88044	49	28
AN515-6-20	88044	104	93	AN525-10R8	88044	49	30
AN515-6-36	88044	104	77	AN525-10R8	88044	49	32
AN515-6-40		KITS		AN525-10R8	88044	49	36
AN515-6-5	88044	KITS		AN525-10R8	88044	80	127
AN515-6-5		KITS		AN525-10R8	88044	81	110
AN515-6R7		KITS		AN525-10R8	88044	115	
AN515-6R8		KITS		AN525-10R8	88044	160	25
AN515C2-5	88044	112	15	AN525-10R8	88044	160	26
AN515DD416R16	88044	BULK		AN525-10R8	88044	169	12
AN515DB32-10	88044	131	13	AN525-10R8	88044	176	3
AN515UB2-4	88044	113B	77	AN525-10R8	88044	176	4
AN515UB6R4	88044	114F	49	AN525-10R8	88044	181	12
AN515UB616-16	88044	131		AN525-10R8	88044	181	19
AN520-10-5		KITS		AN525-10R8	88044	181	26
				AN525-1032R10	88044	44	19D
				AN525-416-12	88044	115	35
AN520-10R26	88044	33	37	AN525-416R18	88044	129	20
AN520-10R26	88044	118		AN525-8R18	88044	140	22
AN520-10R26	88044	124	14	AN525-8R20	88044	133	19
AN520-416-14		KITS		AN525-8R6	88044	BULK	
AN520B1-2	88044	114E	74	AN525-8R8	88044	44	34
AN520B1-2	88044	114G	100	AN525-8R8	88044	137	
AN520B1-2	88044	114G	90	AN525-8R8	88044	180	10
AN520B1-2	88044	114H	90	AN525-832R10	88044	41	
AN520B1-2	88044	114H	96	AN525-832R10	88044	44	16
AN520B1-2	88044	114J	75	AN525-832R10	88044	44	2
AN520B1-2	88044	114J	81	AN525-832R10	88044	44	21
AN520C10R40	88044	119	7	AN525-832R10	88044	44	23
AN520DD10-12	88044	131		AN525-832R10	88044	44	25
AN525-10R10	88044	44	54	AN525-832R10	88044	44	27
AN525-10R10	88044	44	56	AN525-832R10	88044	44	29
AN525-10R10	88044	44	57	AN525-832R10	88044	44	31
AN525-10R10	88044	44	59	AN525-832R10	88044	46	82
AN525-10R10	88044	46	84	AN525-832R10	88044	50	3
AN525-10R10	88044	49	33	AN525-832R10	88044	50	42
AN525-10R10	88044	56	12	AN525-832R10	88044	101	77
AN525-10R10	88044	56	16	AN525-832R10	88044	123	34
AN525-10R10	88044	56	9	AN525-832R10	88044	132	86
AN525-10R10	88044	59	2	AN525-832R10	88044	138	
AN525-10R10	88044	59	3	AN525-832R10	88044	139	9
AN525-10R10	88044	61	2	AN525-832R10	88044	146	7
AN525-10R10	88044	115	33	AN525-832R10	88044	154	66
AN525-10R10	88044	128	11	AN525-832R10	88044	154	67
AN525-10R10	88044	169	13	AN525-832R10	88044	154	68
AN525-10R12	88044	49	89	AN525-832R10	88044	154	69
AN525-10R12	88044	56	5	AN525-832R10	88044	154	70
AN525-10R14	88044	44	58	AN525-832R10	88044	154	71
AN525-10R14	88044	49		AN525-832R10	88044	154	74
AN525-10R14	88044	150	109	AN525-832R10	88044	154	75
AN525-10R14	88044	150	112	AN525-832R10	88044	154	76
AN525-10R16	88044	42	11	AN525-832R10	88044	154	77
AN525-10R16	88044	128		AN525-832R10	88044	154	78
AN525-10R20	88044	116	1	AN525-832R10	88044	154	79
AN525-10R6	88044	79	153	AN525-832R12	88044	41	114
AN525-10R6	88044	BULK		AN525-832R12	88044	41	2
AN525-10R8	88044	44	18	AN525-832R12	88044	75	
AN525-10R8	88044	44	33	AN525-832R12	88044	101	121
AN525-10R8	88044	44	37	AN525-832R12	88044	101	123
AN525-10R8	88044	44	55	AN525-832R12	88044	101	127
AN525-10R8	88044	46	79	AN525-832R12	88044	101	81
AN525-10R8	88044	46	85	AN525-832R12	88044	101	83
AN525-10R8	88044	46	86	AN525-832R12	88044	101	87
AN525-10R8	88044	49	15	AN525-832R12	88044	154	15
AN525-10R8	88044	49	17	AN525-832R14	88044	45	13
AN525-10R8	88044	49	19	AN525-832R14	88044	131	55
AN525-10R8	88044	49	20	AN525-832R14	88044	132	79

REFERENCE NUMBER	MFG CODE	FIG NUMBER	ITEM NUMBER	REFERENCE NUMBER	MFG CODE	FIG NUMBER	ITEM NUMBER
AN525-832R14	88044	153	19	AN525D832R6	88044	44	19B
AN525-832R16	88044	126	31	AN525D832R8	88044	43	
AN525-832R16	88044	126	36	AN525D832R8	88044	46	15
AN525-832R18	88044	50	10	AN525D832R8	88044	46	17
AN525-832R18	88044	101	119	AN525D832R8	88044	46	20
AN525-832R18	88044	101	79	AN525D832R8	88044	139	
AN525-832R18	88044	126	32	AN525D832R8	88044	152	19
AN525-832R18	88044	126	37	AN526-1032R16	88044	55	7
AN525-832R20	88044	70	27				
AN525-832R20	88044	101	129	AN526-1032R26	88044	33	34
AN525-832R20	88044	101	89	AN526-1032R26	88044	147	24
AN525-832R22	88044	126	33	AN526-1032R26	88044	148	
AN525-832R22	88044	126	38	AN526-1032R36	88044	104	90
AN525-832R6	88044	149	3	AN526-1032R36	88044	147	21
AN525-832R6	88044	154	18	AN526-1032R8	88044	130	
AN525-832R6	88044	176	11	AN526-632R32	88044	115	22
AN525-832R8	88044	42	49	AN526-632 40	88044	55	101
AN525-832R8	88044	50	4				
AN525-832R8	88044	101	125				
AN525-832R8	88044	101	85				
AN525-832R8	88044	115					
AN525-832R8	88044	128					
AN525-832R8	88044	129	17				
AN525-832R8	88044	129	18				
AN525-832R8	88044	154	4				
AN525-832R8	88044	154	72				
AN525-832R8	88044	154	73	AN526-832R18	88044	122	59
AN525-832R8	88044	154	89				
AN525-832R8	88044	180	3	AN526-832R9	88044	153	28
				AN526C1032	88044	150	110
AN525D10R10	88044	41	190	AN526DD632-3		KITS	
AN525D10R10	88044	109	15	AN526DD632R10	88044	109	7
AN525D10R10	88044	118		AN526DD632R12	88044	113	
AN525D10R12	88044	132		AN526DD632R12	88044	114	
AN525D10R12	88044	138		AN526DD632R16	88044	113	
AN525D10R8	88044	41	189	AN526DD632R16	88044	114	
AN525D10R8	88044	46	18	AN526DD632R2D	88044	114	
AN525D10R8	88044	74	27	AN526DD632R20	88044	113	
AN525D10R8	88044	75	40	AN526DD632R20	88044	114	
AN525D10R8	88044	77	130	AN526DD632R6	88044	109	10
AN525D10R8	88044	77	132	AN526DD632R6	88044	130	63
AN525D10R8	88044	115	51	AN526DD632R6	88044	130	65
AN525D10R8	88044	132	106C	AN526DD632R6	88044	131	34
AN525D10R8	88044	132	141	AN526DD632R6	88044	131	38
AN525D10R8	88044	132	143	AN526DD632R6	88044	132	48
AN525D10R8	88044	132	147	AN526DD632R6	88044	132	53
AN525D10R8	88044	136	10	AN526DD632R6	88044	132	54
AN525D10R8	88044	136	13	AN526DD632R6	88044	138	
AN525D10R8	88044	136	17	AN526DD632R8	88044	115	58
AN525D10R8	88044	136	29	AN526DD832R8	88044	130	
AN525D10R8	88044	136	32	AN526DD832R8	88044	132	145
AN525D10R8	88044	136	43	AN526DD832R8	88044	133	11
AN525D10R8	88044	136	45	AN526DD832R8	88044	139	
AN525D10R8	88044	136	50	AN535-0-2		KITS	
AN525D10R8	88044	137	1	AN535-0-3		KITS	
AN525D10R8	88044	137	23	AN535-00-2		KITS	
AN525D10R8	88044	137	3	AN535-2-3		KITS	
AN525D10R8	88044	137	33	AN535-4-3		KITS	
AN525D10R8	88044	139		AN55381	88044	BULK	
AN525D10R8	88044	180		AN5541-1	88044	175	1
AN525D1032	88044	129	27	AN565A6H2		KITS	
AN525D416-6	88044	129	25	AN565B1024H6		KITS	
AN525D832-8	88044	57	16	AN565B1024H6	88044	125A	19
AN525D832R10	88044	41	109	AN565B8H3		KITS	
AN525D832R10	88044	43	70	AN565B8H3	88044	76B	7
AN525D832R10	88044	132	19	AN565B8H8		KITS	
AN525D832R12	88044	138		AN565C10-5	88044	BULK	
AN525D832R12	88044	152	21	AN565C10-5	88044	175H	34
AN525D832R12	88044	152	23	AN565C10-6		KITS	
AN525D832R18	88044	152	16	AN565C10-6	88044	175B	35
AN525D832R6	88044	44	17	AN565DC8H2		KITS	

REFERENCE NUMBER	MFG CODE	FIG NUMBER	ITEM NUMBER	REFERENCE NUMBER	MFG CODE	FIG NUMBER	ITEM NUMBER
AN565DH3		KITS		AN6227-5	00742	84B	19
AN565D2H2	88044	113B	109	AN6227-6		KITS	
AN565D6H5	88044	130		AN6227-8		KITS	
AN565D6H5	88044	130		AN6227B10		KITS	
AN565D6H5	88044	130		AN6227B10		KITS	
AN565D6H5	88044	130		AN6227B10	88044	17	39
AN565D6H5	88044	130		AN6227B10	88044	30	28
AN565D8-4		KITS		AN6227B10	88044	96	110
AN566C10-5		KITS		AN6227B10	88044	96	112
AN5760-4B	88044	114		AN6227B10	88044	100	22
AN5760L4B	88044	114		AN6227B10	88044	100	25
AN5766-3	88044	109		AN6227B10	88044	100	26
AN5766-4	88044	109		AN6227B10	88044	100	27
AN5791	88044	113		AN6227B10	88044	100	28
AN5791	88044	114		AN6227B10	88044	101	74
AN5800-1	88044	109	12	AN6227B10	88044	106	102
AN5800-1	88044	113		AN6227B10	88044	106	74
AN5800-1	88044	114		AN6227B10	88044	106	78
AN5813-1	88044	109	2	AN6227B10	88044	106	79
AN5823-1	88044	109	11	AN6227B10	88044	106	92
AN5823-1	88044	113	1	AN6227B10	88044	125A	36
AN5823-1	88044	114	15	AN6227B10	88044	175C	29
AN5823-1	88044	114	35	AN6227B11		KITS	
AN5823-1	88044	114	37	AN6227B12		KITS	
AN5825-7	88044	113		AN6227B12	88044	96	142
AN5825-7	88044	114		AN6227B12	88044	96	75
AN5860W2	88044	113		AN6227B12	88044	96	98
AN6-12		KITS		AN6227B12	88044	103	13
AN6-6A		KITS		AN6227B13	88044	76B	8
AN6-6A	88044	11D	41	AN6227B13	88044	104A	28
AN6-6A	88044	11D	45	AN6227B14	88044	BULK	
AN6CH17	88044	150	2	AN6227B16		KITS	
AN6DDH10	88044	132	34	AN6227B17		KITS	
AN6DDH11	88044	BULK		AN6227B18		KITS	
AN6DDH12	88044	BULK		AN6227B18	88044	BULK	
AN6DD12A	88044	84	18	AN6227B19		KITS	
AN6H11	88044	BULK		AN6227B19		KITS	
AN6H14	88044	12	10	AN6227B2		KITS	
AN6H14A		KITS		AN6227B2	88044	103	18
AN6H15	88044	16	33	AN6227B22		KITS	
AN6H15	88044	16	64	AN6227B23		KITS	
AN6H15A		KITS		AN6227B26	88044	BULK	
AN6H16A	88044	79	70	AN6227B30		KITS	
AN6H21	88044	BULK		AN6227B30	88044	162A	9
AN6H24	88044	BULK		AN6227B32		KITS	
AN6200-6AB	88044	33	36	AN6227B33		KITS	
AN6200-6AB	88044	147	27	AN6227B37		KITS	
AN6200-6AB	88044	148	20	AN6227B37	88044	164	12
AN6200-8AB	88044	35	23	AN6227B38		KITS	
AN6204-1		KITS		AN6227B38	88044	17	35
AN6204-1	88044	84A	22	AN6227B49	88044	BULK	
AN6204-1	88044	84B	24	AN6227B5		KITS	
AN6204-1	88044	162A	17	AN6227B6		KITS	
AN6207-4	88044	85	63	AN6227B7		KITS	
AN6207-4	88044	162	23	AN6227B8	88044	103	36
AN6207-8	88044	35	20	AN6227B8	88044	103	43
AN6227-10		KITS		AN6227B8	88044	106	16
AN6227-11		KITS		AN6227B8	88044	85B	39
AN6227-13		KITS		AN6227B8	88044	104A	42
AN6227-14		KITS		AN6227B9		KITS	
AN6227-14	88044	KITS		AN6227B9	88044	100	2
AN6227-15		KITS		AN6227B9	88044	100	4
AN6227-15	88044	104A	44	AN6227B9	88044	103	24
AN6227-17		KITS		AN6227B9	88044	103	9
AN6227-20		KITS		AN6227B9	88044	106	121
AN6227-20	88044	104A	11	AN6227B9	88044	106	123
AN6227-20	88044	104A	38	AN6227B9	88044	106	125
AN6227-26	88044	96	139	AN6227B9	88044	114E	60
AN6227-27		KITS		AN6227B9	88044	114F	76
AN6227-3		KITS		AN6227B9	88044	114F	84
AN6227-5		KITS		AN6230-10	88044	114J	86

REFERENCE NUMBER	MFG CODE	FIG NUMBER	ITEM NUMBER	REFERENCE NUMBER	MFG CODE	FIG NUMBER	ITEM NUMBER
AN6230B10	88044	114E	10	AN6289D4	88044	54	22
AN6230B10	88044	114G	126	AN6289D4	88044	54	46
AN6230B10	88044	114H	101	AN6289D4	88044	85	
AN6230B11		KITS		AN6289D4	88044	85	16
AN6230B11	88044	164	9	AN6289D4	88044	85	24
AN6230B22	88044	BULK		AN6289D4	88044	85	38
AN6230B32	88044	18	2	AN6289D4	88044	97	4
AN6230B4		KITS		AN6289D4	88044	106	37
AN6230B6		KITS		AN6289D4	88044	144	109
AN6230B6	88044	34	18	AN6289D4	88044	144	120
AN6230B6	88044	149	14	AN6289D4	88044	144	123
AN6230B6	88044	162A	5	AN6289D4	88044	144	141
AN6230B9	88044	BULK		AN6289D4	88044	144	59
AN6231A2		KITS		AN6289D4	88044	144	84
AN6231A21	88044	166	13	AN6289D4	88044	144	94
AN6231A26		KITS		AN6289D4	88044	144	99
AN6232-1	88044	100	55	AN6289D4	88044	145	154
AN6232C15-16		KITS		AN6289D4	88044	145	173
AN6235-3A	88044	32	163	AN6289D4	88044	145	183
AN6235-3A	88044	35	35	AN6289D4	88044	147	14
AN6236-1		KITS		AN6289D4	88044	147	22
AN6236-1	88044	34	28	AN6289D4	88044	148	27
AN6236-1	88044	149	27	AN6289D4	88044	162	13
AN6237-1	88044	34	10	AN6289D4	88044	165	8
AN6237-1	88044	149	11	AN6289D6	88044	32	
AN6238-1		KITS		AN6289D6	88044	32	127
AN6238-1	88044	34	24	AN6289D6	88044	32	128
AN6238-1	88044	34	29	AN6289D6	88044	32	182E
AN6238-1	88044	149	26	AN6289D6	88044	32	183A
AN6238-1	88044	149	28	AN6289D6	88044	32	183B
AN6246-11	88044	BULK		AN6289D6	88044	33	
AN6246-16		KITS		AN6289D6	88044	147	16
AN6270-4-14	88044	111	20B	AN6289D6	88044	147	18
AN6270-4-14	88044	111	20C	AN6289D6	88044	147	25
AN6270-4-16	88044	111	20A	AN6289D6	88044	147	30
AN6270-4-17-500	88044	110	66C	AN6289D6	88044	147	31
AN6270-4-17-500	88044	111	23	AN6289D6	88044	147	32
AN6270-4-17-500	88044	111	24	AN6289D6	88044	147	34
AN6270-4-18	88044	111	66A	AN6289D6	88044	148	11
AN6270-4-20	88044	109	5	AN6289D6	88044	148	12
AN6270-4-21	88044	110	66D	AN6289D6	88044	148	6
AN6270-4-21	88044	111	22	AN6289D8	88044	32	154
AN6270-4-21	88044	111	71A	AN6289D8	88044	32	157
AN6270-4-9 1-2	88044	145		AN6289D8	88044	32	25
AN6283D4	88044	85	5	AN6289D8	88044	32	27
AN6287-1	88044	85	26A	AN6289D8	88044	32	32
AN6289-10D	88044	31	20	AN6289D8	88044	32	35
AN6289-10D	88044	32	165	AN6289D8	88044	32	50
AN6289-10D	88044	147	35	AN6289D8	88044	33	
AN6289-10D	88044	148	39	AN6289D8	88044	33	16
AN6289-3		KITS		AN6289D8	88044	33	29
AN6289-3		KITS		AN6289D8	88044	35	
AN6289-3	88044	28	2	AN6289D8	88044	35	27
AN6289-4		KITS		AN6289D8	88044	144	138
AN6289-4	88044	17	16	AN6289D8	88044	144	4
AN6289-4	88044	144	29	AN6289D8	88044	144	6
AN6289-4	88044	181	7	AN6289D8	88044	144	69
AN6289-4	88044	BULK		AN6289D8	88044	144	79
AN6289-6	88044	181	24	AN6289D8	88044	145	26
AN6289-8	88044	28	20	AN6289D8	88044	147	17
AN6289D12	88044	182	7	AN6289D8	88044	148	
AN6289D4	88044	32		AN6289D8	88044	148	18
AN6289D4	88044	32	125	AN6289D8	88044	148	19
AN6289D4	88044	32	181D	AN6289D8	88044	148	40
AN6289D4	88044	32	182D	AN6290-16	88044	22	7
AN6289D4	88044	32	184D	AN6290-16	88044	76	2
AN6289D4	88044	32	185D	AN6290-16	88044	76	47
AN6289D4	88044	32	203	AN6290-16	88044	76	5
AN6289D4	88044	32	40	AN6290-2		KITS	
AN6289D4	88044	32	44	AN6290-5		KITS	
AN6289D4	88044	33	25	AN6290-6		KITS	

REFERENCE NUMBER	MFG CODE	FIG NUMBER	ITEM NUMBER	REFERENCE NUMBER	MFG CODE	FIG NUMBER	TEM NUMBER
AN6290-8		KITS					
AN6290-8		KITS		AN790C5	88044	214A	10
AN6290-8	88044	84B	21	AN790C5	88044	214A	11
AN6290-8	96906	84B	26	AN790C5	88044	214A	12
AN6291-12	88044	182	9	AN790C5	88044	214A	9
AN632-1	88044	100	39	AN8H21	88044	84A	3
AN6627B10	88044	106	77	AN8H21	88044	84B	7
AN664C2	88044	122	28	AN8H25	88044	BULK	
AN665-10R	88044	BULK		AN8H6A		KITS	
AN665-34R	88044	101	110	AN8H6A	88044	158	15
AN669S5RH	88044	101		AN8008D3	88044	77	23
AN7H11A		KITS		AN8008D5	88044	BULK	
AN7H31	88044	BULK		AN8013D1	88044	77	
AN73-4		KITS		AN8015-2	88044	F1	1
AN73-5		KITS		AN8018-1	88044	115	20
AN73-5	88044	35A	8	AN804-4	88044	77	
AN73-6	88044	35A	9	AN814-DL	88044	KITS	
AN73-6		KITS		AN814-16D		KITS	
AN73A17	88044	214A	98	AN814-16DL	88044	157	6
AN737RM48	88044	BULK		AN814-3DL	88044	78	17
AN737RM56	88044	123	10	AN814-4DL		KITS	
AN737RM56	88044	123	21	AN814-4L		KITS	
AN737RM56	88044	176	66	AN814-6L	88044	BULK	
AN737RM56	88044	176	71	AN814-8DL		KITS	
AN737RM82	88044	11	19	AN814-8L	88044	155	17
AN74A26	88044	96	48	AN815-4		KITS	
AN74A4		KITS		AN815-8D		KITS	
AN74A4	88044	21	1	AN816-10-12	88044	83	3
AN74A5		KITS		AN816-10-12	88044	84	4
AN742D6	88044	BULK		AN816-10-12B	88044	BULK	
AN742D8		KITS		AN816-10-12D	88044	BULK	
AN743-12	88044	34		AN816-2D		KITS	
AN743-12	88044	85		AN816-2D	88044	79A	9
AN743-12	88044	140	3	AN816-3	88044	174	
AN75-16		KITS		AN816-4	88044	BULK	
AN7510-1	88044	160	14	AN816-4D	88044	11	9
AN7510-2	88044	150	16	AN816-4D	88044	74	76
AN7510-2	88044	176	55	AN816-4D	88044	75	92
AN7516-1	88044	49	56	AN816-4D	88044	124	64
AN7516-1	88044	49	61	AN816-4D	88044	114C	
AN7516-1	88044	49	74	AN816-4D	88044	114S	19
AN7516-1	88044	49	77	AN816-6	88044	123	
AN7516-1	88044	49	80	AN816-6-6D	88044	31	25
AN753-1	88044	BULK		AN816-6D	88044	123	55
AN753-3	88044	BULK		AN816-6D	88044	208	72
AN756D20	88044	74	10	AN816-8	88044	BULK	
AN756D20	88044	75	16	AN816-8D	88044	80	58
AN756D20	88044	75	19	AN816-8D	88044	81	46
AN756D24	88044	76	19	AN818-10	88044	BULK	
AN756D24	88044	76	58	AN818-10D	88044	50	147
AN756D24	88044	79	77	AN818-10D	88044	50	151
AN760D20	88044	75	9	AN818-10D	88044	145	110
AN760D24	88044	76	25	AN818-10D	88044	145	114
AN760D24	88044	76	64	AN818-10D	88044	145	50
AN762D24	88044	76	21	AN818-10D	88044	146	33
AN763-20	88044	74	12	AN818-10D	88044	BULK	
AN763-20	88044	75	21	AN818-12D	88044	79	113
AN763-20	88044	174	6	AN818-12D	88044	79	60
AN763-24	88044	74	23	AN818-12D	88044	79	66
AN763-24	88044	75	36	AN818-12D	88044	80	92
AN763-24	88044	76	22	AN818-12D	88044	81	75
AN763-24	88044	76	27	AN818-20D	88044	74	5
AN763-24	88044	76	61	AN818-20D	88044	79	73
AN763-24	88044	76	66	AN818-24	88044	BULK	
AN763-24	88044	79	79	AN818-4	88044	54	17
AN763-24	88044	174	10	AN818-4	88044	54	42
AN775-4	88044	BULK		AN818-4	88044	110	23
AN777-4D	88044	BULK		AN818-4	88044	111	31
AN779D8		KITS		AN818-4	88044	111	35
AN779D8	88044	26		AN818-4	88044	111	78
AN779D8	88044	26	25	AN818-4	88044	181	2

REFERENCE NUMBER	MFG CODE	FIG NUMBER	ITEM NUMBER	REFERENCE NUMBER	MFG CODE	FIG NUMBER	ITEM NUMBER
AN818-4	88044	BULK		AN818-6	88044	145	59
AN818-4C	88044	110	10	AN818-6	88044	BULK	
AN818-4C	88044	110	68	AN818-6D	88044	77	5
AN818-4C	88044	111	10	AN818-6D	88044	123	52
AN818-4C	88044	BULK		AN818-6D	88044	145	45
AN818-4D	88044	32	121	AN818-6D	88044	145	63
AN818-4D	88044	32	135	AN818-6D	88044	146	25
AN818-4D	88044	32	140	AN818-6D	88044	146	29
AN818-4D	88044	54	12	AN818-6D	88044	147	10
AN818-4D	88044	54	28	AN818-6D	88044	147	2
AN818-4D	88044	54	3	AN818-6D	88044	147	6
AN818-4D	88044	54	33	AN818-6D	88044	148	3
AN818-4D	88044	54	37	AN818-6D	88044	148	8
AN818-4D	88044	54	8	AN818-6D	88044	BULK	
AN818-4D	88044	110	15	AN818-8	88044	144	19
AN818-4D	88044	110	19	AN818-8D	88044	32	67
AN818-4D	88044	110	2	AN818-8D	88044	32	72
AN818-4D	88044	110	27	AN818-8D	88044	32	76
AN818-4D	88044	110	31	AN818-8D	88044	32	84
AN818-4D	88044	110	35	AN818-8D	88044	32	89
AN818-4D	88044	110	39	AN818-8D	88044	35	2
AN818-4D	88044	110	43	AN818-8D	88044	35	8
AN818-4D	88044	110	47	AN818-8D	88044	110	57
AN818-4D	88044	110	52	AN818-8D	88044	144	135
AN818-4D	88044	110	6	AN818-8D	88044	144	61
AN818-4D	88044	110	64	AN818-8D	88044	144	66
AN818-4D	88044	110	76	AN818-8D	88044	145	139
AN818-4D	88044	111		AN818-8D	88044	145	144
AN818-4D	88044	111	18	AN818-8D	88044	145	149
AN818-4D	88044	111	2	AN818-8D	88044	145	161
AN818-4D	88044	111	27	AN818-8D	88044	145	166
AN818-4D	88044	111	39	AN818-8D	88044	145	35
AN818-4D	88044	111	43	AN818-8D	88044	145	94
AN818-4D	88044	111	47	AN818-8D	88044	145	98
AN818-4D	88044	111	51	AN818-8D	88044	146	13
AN818-4D	88044	111	55	AN818-8D	88044	146	17
AN818-4D	88044	111	59	AN818-8D	88044	146	21
AN818-4D	88044	111	6	AN818-8D	88044	148	15
AN818-4D	88044	111	64	AN818-8D	88044	BULK	
AN818-4D	88044	111	69	AN819-10D	88044	BULK	
AN818-4D	88044	111	74	AN819-20D	88044	74	6
AN818-4D	88044	111	82	AN819-20D	88044	79	74
AN818-4D	88044	111	86	AN819-4	88044	54	13
AN818-4D	88044	122	26				
AN818-4D	88044	124	19				
AN818-4D	88044	124	73	AN821-6	88044	145	57
AN818-4D	88044	144	101	AN822-12-16D	88044	76	6
AN818-4D	88044	144	32	AN822-16-12D	88044	173	
AN818-4D	88044	144	46	AN822-16-12D	88044	174	16
AN818-4D	88044	144	54	AN822-4D	88044	76	8
AN818-4D	88044	144	87	AN822-8D	88044	23	14
AN818-4D	88044	145	104	AN823-16-12D	88044	BULK	
AN818-4D	88044	145	119	AN832-4	88044	32	
AN818-4D	88044	145	124	AN832-4D	88044	78	10
AN818-4D	88044	145	129	AN832-4D	88044	124	
AN818-4D	88044	145	134	AN832-6D	88044	32	183C
AN818-4D	88044	145	30	AN832-6D	88044	33	27
AN818-4D	88044	145	68	AN832-6D	88044	147	
AN818-4D	88044	145	72	AN833-16D		KITS	
AN818-4D	88044	145	76				
AN818-4D	88044	145	80				15
AN818-4D	88044	145	84				
AN818-4D	88044	145	89				
AN818-4D	88044	148	24				
AN818-4D	88044	162	10				
AN818-4D	88044	162	67	AN837-16B	88044	174	
AN818-4D	88044	162	71	AN837-4	88044	181	
AN818-4D	88044	173	16	AN889-1	88044	134	3
AN818-4D	88044	BULK		AN898-1	88044	129	12
AN818-4D	88044	114S	21	AN900-16	88044	25	
AN818-5D	88044	BULK		AN900-26	88044	75	26

REFERENCE NUMBER	MFG CODE	FIG NUMBER	ITEM NUMBER	REFERENCE NUMBER	MFG CODE	FIG NUMBER	ITEM NUMBER
AN901-4A	88044	BULK		AN935-1L	88044	114H	80
AN901-8A		KITS		AN935-1L	88044	114H	91
AN901-8A	88044	26		AN935-1L	88044	114H	97
AN901-8A	88044	26	24	AN935-1L	88044	114J	41
AN912-1	88044	74		AN935-1L	88044	114J	66
AN912-1	88044	75		AN935-1L	88044	114J	76
AN913-1		KITS		AN935-1L	88044	114J	82
AN913-1	88044	175H	3	AN935-10		KITS	
AN913-1S		KITS		AN935-10		KITS	
AN915-1	88044	BULK		AN935-2		KITS	
AN915-6	88044	174	17	AN935-3		KITS	
AN924-16D		KITS		AN935-3	88044	113F	40
AN924-20D	88044	BULK		AN935-3	88044	113F	73
AN924-6	88044	173	32	AN935-3L	88044	44C	18
AN929-16		KITS		AN935-3L	88044	113A	25
AN929-4	88044	85	64	AN935-3L	88044	113A	8
AN929-4	88044	162	22	AN935-3L	88044	113B	103
AN929-4S	88044	BULK		AN935-3L	88044	114R	17
AN929A16	88044	22	9	AN935-3L	88044	114R	6
AN929A6	88044	74	15	AN935-4		KITS	
AN929A6	88044	75	27	AN935-4	88044	122	
AN929A6	88044	208		AN935-4L		KITS	
AN929A8	88044	110	61	AN935-4L	88044	44C	31
AN931-1		KITS		AN935-6		KITS	
AN931-5-9		KITS		AN935-6L		KITS	
AN931-5-9	88044	100	15	AN935-616		KITS	
AN931A14-20	88044	BULK		AN935-616	88044	11D	42
AN931C16-30	88044	BULK		AN935-616	88044	11D	46
AN932-1		KITS		AN935-8		KITS	
AN932-1	88044	17	43	AN935-8L		KITS	
AN932-1	88044	96	131	AN935B10L		KITS	
AN932-1	88044	96	133	AN935B616	88044	131	
AN932-1	88044	97	3	AN935B616L		KITS	
AN932-1	88044	103	54	AN935B616L	88044	131	83
AN932-1	88044	106	140	AN935B616L	88044	132	126
AN932-1	88044	206	13	AN935B616L	88044	132	131
AN932-1	88044	206	14	AN935B8		KITS	
AN932-2		KITS		AN936A4		KITS	
AN932-2		KITS		AN936A8		KITS	
AN932-2	88044	96	132	AN938D6	88044	31	
AN932-2	88044	97	2	AN938D8	88044	35	21
AN932-2	88044	100	61	AN938D8	88044	81	
AN932-2	88044	157	57	AN939D4	88044	32	184C
AN932-2	88044	178	5	AN939D4	88044	32	185C
AN932-2	88044	206	15	AN939D4	88044	54	21
AN932-2	88044	206	16	AN939D4	88044	54	49
AN932-4	88044	31	12	AN939D4	88044	162	1B
AN932D1	88044	BULK		AN939D4	88044	BULK	
AN932D3		KITS		AN939D6	88044	32	
AN932M3		KITS		AN939D6	88044	33	26
AN932M3	88044	18	26	AN939D6	88044	173	
AN932M3	88044	BULK		AN939D8	88044	32	
AN933-1	88044	184	42	AN939D8	88044	33	
AN933B1	88044	184	27	AN941D4	88044	32	181C
AN933B1	88044	198	28	AN941D4	88044	32	182C
AN933B1	88044	206	12	AN941D4	88044	78	7
AN933B12	88044	BULK		AN950-1	88044	52	
AN933B2	88044	BULK		AN951REB3N	88044	100	16
AN933B3	88044	200	15	AN955-3	88044	46	
AN933B3	88044	207		AN955-4	88044	67	
AN933D1	88044	206	57	AN960-10		KITS	
AN933D1	88044	206	61	AN960-10		KITS	
AN933D2	88044	184	28	AN960-10	88044	11	
AN933D2	88044	207	6	AN960-10	88044	12	
AN933D3	88044	80	101	AN960-10	88044	16	
AN935-1L	88044	114E	51	AN960-10	88044	25	3
AN935-1L	88044	114E	75	AN960-10	88044	39	11
AN935-1L	88044	114E	88	AN960-10	88044	46	
AN935-1L	88044	114F	101	AN960-10	88044	49	
AN935-1L	88044	114F	87	AN960-10	88044	50	
AN935-1L	88044	114H	54	AN960-10	88044	50	

REFERENCE NUMBER	MFG CODE	FIG NUMBER	ITEM NUMBER	REFERENCE NUMBER	MFG CODE	FIG NUMBER	ITEM NUMBER
AN960-10	88044	52		AN960-1416	88044	BULK	
AN960-10	88044	54		AN960-1616	88044	BULK	
AN960-10	88044	56		AN960-4		KITS	
AN960-10	88044	72		AN960-4L	88044	KITS	
AN960-10	88044	104		AN960-4L		KITS	
AN960-10	88044	104	76	AN960-416		KITS	
AN960-10	88044	104	92	AN960-416		KITS	
AN960-10	88044	105		AN960-416		KITS	
AN960-10	88044	107		AN960-416		KITS	
AN960-10	88044	108		AN960-416	88044	12	
AN960-10	88044	122		AN960-416	88044	23	
AN960-10	88044	122		AN960-416	88044	25	14
AN960-10	88044	122		AN960-416	88044	27	
AN960-10	88044	138		AN960-416	88044	37	
AN960-10	88044	169		AN960-416	88044	37	25
AN960-10	88044	170		AN960-416	88044	38	
AN960-10	88044	172		AN960-416	88044	51	
AN960-10	88044	172	35	AN960-416	88044	52	
AN960-10	88044	172	80	AN960-416	88044	54	57
AN960-10	88044	173		AN960-416	88044	54	59
AN960-10	88044	176		AN960-416	88044	62	12
AN960-10	88044	178		AN960-416	88044	70	
AN960-10	88044	178	13	AN960-416	88044	70	12
AN960-10	88044	182		AN960-416	88044	74	22
AN960-10	88044	182		AN960-416	88044	75	35
AN960-10	88044	190		AN960-416	88044	82	
AN960-10	88044	35A	10	AN960-416	88044	84	
AN960-10	88044	35A	25	AN960-416	88044	87	
AN960-10	88044	35A	4	AN960-416	88044	88	
AN960-10	88044	79A	27	AN960-416	88044	91	
AN960-10	88044	175B	29	AN960-416	88044	101	
AN960-10	88044	175B	9	AN960-416	88044	104	
AN960-10	88044	175D	30	AN960-416	88044	104	
AN960-10	88044	175D	43	AN960-416	88044	104	
AN960-10	88044	175D	47	AN960-416	88044	104	41
AN960-10	88044	175E	5	AN960-416	88044	104	9
AN960-10	88044	175G	3	AN960-416	88044	105	
AN960-10	88044	175H	11	AN960-416	88044	107	
AN960-10	88044	175H	32	AN960-416	88044	116	
AN960-10	88044	214A	102	AN960-416	88044	119	15
AN960-10	88044	214A	138	AN960-416	88044	120	
AN960-10	88044	214A	208	AN960-416	88044	151	
AN960-10	88044	214A	222	AN960-416	88044	153	
AN960-10	88044	214A	237	AN960-416	88044	155	
AN960-10	88044	214A	301	AN960-416	88044	157	
AN960-10	88044	214A	381	AN960-416	88044	157	
AN960-10	88044	214A	383	AN960-416	88044	158	
AN960-10	88044	214A	41	AN960-416	88044	158	
AN960-10	88044	214A	440	AN960-416	88044	158	35
AN960-10	88044	214A	516	AN960-416	88044	165	
AN960-10	88044	214A	522	AN960-416	88044	169	
AN960-10	88044	214A	527	AN960-416	88044	169	36
AN960-10	88044	214A	99	AN960-416	88044	172	
AN960-10L		KITS		AN960-416	88044	175	6
AN960-10L		KITS		AN960-416	88044	176	
AN960-10L		KITS		AN960-416	88044	BULK	
AN960-10L		KITS		AN960-416	31435	175D	71
AN960-10L	88044	KITS		AN960-416	88044	175G	11
AN960-10L		KITS		AN960-416	88044	214A	15
AN960-10L	88044	25	1	AN960-416	88044	214A	17
AN960-10L	88044	122		AN960-416	88044	214A	262
AN960-10L	88044	81A	12	AN960-416	88044	214A	385
AN960-10L	88044	123B	44	AN960-416	88044	214A	387
AN960-10L	88044	125A	63	AN960-416	88044	214A	446
AN960-10L	88044	175A	39	AN960-416	88044	214A	508
AN960-10L	88044	175C	3	AN960-416	88044	214A	51
AN960-1016		KITS		AN960-416	88044	214A	55
AN960-1016	88044	16	21	AN960-416	88044	214A	57
AN960-1016	88044	84	28	AN960-416	88044	214A	59
AN960-1016	88044	BULK		AN960-416	88044	214A	61
AN960-1216		123		AN960-416L		KITS	

REFERENCE NUMBER	MFG CODE	FIG NUMBER	ITEM NUMBER	REFERENCE NUMBER	MFG CODE	FIG NUMBER	ITEM NUMBER
AN960-416L		KITS		AN960-616	88044	176	18
AN960-416L	88044	15		AN960-616	88044	183	
AN960-416L	88044	26	2	AN960-616L		KITS	
AN960-416L	88044	169		AN960-616L	88044	12	
AN960-416L	88044	35A	13	AN960-616L	88044	15	
AN960-416L	88044	35A	16	AN960-716		KITS	
AN960-416L	88044	79A	2	AN960-716	88044	12	70
AN960-416L	88044	125A	3	AN960-716	88044	13	
AN960-516		KITS		AN960-716	88044	14	
AN960-516		KITS		AN960-716	88044	16	
AN960-516	88044	23		AN960-716	88044	16	28
AN960-516	88044	37		AN960-716	88044	122	
AN960-516	88044	38		AN960-716	88044	123	
AN960-516	88044	68	3	AN960-716	88044	144	
AN960-516	88044	98		AN960-716	88044	162	
AN960-516	88044	99		AN960-716	88044	208	8
AN960-516	88044	101		AN960-716L		KITS	
AN960-516	88044	105		AN960-716L		KITS	
AN960-516	88044	122		AN960-8		KITS	
AN960-516	88044	157		AN960-8		KITS	
AN960-516	88044	157		AN960-8	88044	12	8
AN960-516	88044	158		AN960-8	88044	18	
AN960-516	88044	158	53	AN960-8	88044	24	
AN960-516	88044	162		AN960-8	88044	176	
AN960-516	88044	165		AN960-8	88044	180	
AN960-516	88044	176		AN960-8	88044	79A	22
AN960-516	88044	181	31	AN960-8	88044	79B	4
AN960-516	88044	76B	3	AN960-8	88044	81A	8
AN960-516L		KITS		AN960-8	88044	123B	57
AN960-516L		KITS		AN960-8	88044	175A	97
AN960-516L	88044	21		AN960-8	88044	175D	37
AN960-516L	88044	37		AN960-8	88044	175D	60
AN960-516L	88044	70	16	AN960-8L		KITS	
AN960-516L	88044	105		AN960-8L	88044	KITS	
AN960-516L	88044	169	35	AN960-8L	88044	90A	5
AN960-516L	88044	174	4	AN960-816		KITS	
AN960-516L	88044	174	8	AN960-816		KITS	
AN960-516L	88044	175	3	AN960-816	88044	12	
AN960-6		KITS		AN960-816	88044	12	2
AN960-6	88044	104		AN960-816	88044	38	
AN960-6	88044	132	115	AN960-816	88044	38	24
AN960-6	88044	132	117	AN960-816	88044	56	
AN960-6	88044	132	119	AN960-816	88044	84	27
AN960-6	88044	146		AN960-816	88044	84	33
AN960-6	88044	162		AN960-816	88044	107	12
AN960-6	88044	191	30	AN960-816	88044	162	
AN960-6	88044	192	12	AN960-816	88044	176	39
AN960-6	88044	192	20	AN960-816	88044	84A	2
AN960-6	88044	193	19	AN960-816	88044	84B	6
AN960-6	88044	195	12	AN960-816	88044	84B	8
AN960-6	88044	195	8	AN960-916	88044	162	
AN960-6	88044	79A	45	AN960C10	88044	50	
AN960-6	88044	81A	29	AN960C10	88044	170	
AN960-6L		KITS		AN960C10L	88044	43	
AN960-6L	88044	123B	53	AN960C10L	88044	160	
AN960-616		KITS		AN960C10L	88044	169	
AN960-616		KITS		AN960C10L	88044	170	
AN960-616	88044	12		AN960C10L	88044	176	
AN960-616	88044	12		AN960C1216	88044	118	
AN960-616	88044	15		AN960C1216L	88044	BULK	
AN960-616	88044	19	16	AN960C3	88044	176	
AN960-616	88044	47	5	AN960C3	88044	113F	177
AN960-616	88044	68	7	AN960C3	88044	113F	181
AN960-616	88044	84	35	AN960C416	88044	38	45
AN960-616	88044	132	127	AN960C416	88044	171	
AN960-616	88044	132	129	AN960C416	88044	BULK	
AN960-616	88044	132	132	AN960C416L	88044	169	
AN960-616	88044	132	134	AN960C516	88044	150	
AN960-616	88044	158		AN960C516	88044	169	
AN960-616	88044	175	9	AN960C616	88044	43	23
AN960-616	88044	176		AN960C616	88044	150	

REFERENCE NUMBER	MFG CODE	FIG NUMBER	ITEM NUMBER	REFERENCE NUMBER	MFG CODE	FIG NUMBER	ITEM NUMBER
AN960C716	88044	146		AN960PD10	88044	101	
AN960C716	88044	210	30	AN960PD10	88044	102	
AN960C716	88044	BULK		AN960PD10	88044	104	
AN960C8	88044	41		AN960PD10	88044	105	
AN960C8	88044	115		AN960PD10	88044	106	
AN960C8	88044	172		AN960PD10	88044	106	
AN960C816	88044	36	24	AN960PD10	88044	106	63
AN960C816	88044	BULK		AN960PD10	88044	107	
AN960C916	88044	BULK		AN960PD10	88044	108	
AN960D10		KITS		AN960PD10	88044	109	
AN960D416		KITS		AN960PD10	88044	112	
AN960PD10		KITS		AN960PD10	88044	115	
AN960PD10		KITS		AN960PD10	88044	115	
AN960PD10	88044	11		AN960PD10	88044	115	101
AN960PD10	88044	11	36	AN960PD10	88044	116	
AN960PD10	88044	18		AN960PD10	88044	116	
AN960PD10	88044	32		AN960PD10	88044	117	
AN960PD10	88044	34		AN960PD10	88044	117	
AN960PD10	88044	39		AN960PD10	88044	117	
AN960PD10	88044	41		AN960PD10	88044	117	
AN960PD10	88044	43		AN960PD10	88044	117	
AN960PD10	88044	44		AN960PD10	88044	117	104
AN960PD10	88044	45		AN960PD10	88044	118	
AN960PD10	88044	46	68	AN960PD10	88044	118	
AN960PD10	88044	47		AN960PD10	88044	118	
AN960PD10	88044	48		AN960PD10	88044	118	
AN960PD10	88044	49		AN960PD10	88044	118	
AN960PD10	88044	50		AN960PD10	88044	118	
AN960PD10	88044	50	32	AN960PD10	88044	119	
AN960PD10	88044	51		AN960PD10	88044	120	
AN960PD10	88044	52		AN960PD10	88044	120	
AN960PD10	88044	53		AN960PD10	88044	122	
AN960PD10	88044	54		AN960PD10	88044	122	
AN960PD10	88044	54		AN960PD10	88044	122	
AN960PD10	88044	54		AN960PD10	88044	123	
AN960PD10	88044	54		AN960PD10	88044	123	
AN960PD10	88044	55		AN960PD10	88044	123	
AN960PD10	88044	56		AN960PD10	88044	123	
AN960PD10	88044	56	53	AN960PD10	88044	123	87
AN960PD10	88044	56	96	AN960PD10	88044	123	90
AN960PD10	88044	57		AN960PD10	88044	124	
AN960PD10	88044	59		AN960PD10	88044	124	
AN960PD10	88044	60		AN960PD10	88044	128	
AN960PD10	88044	61		AN960PD10	88044	128	
AN960PD10	88044	62		AN960PD10	88044	129	
AN960PD10	88044	67		AN960PD10	88044	130	
AN960PD10	88044	67		AN960PD10	88044	132	
AN960PD10	88044	69		AN960PD10	88044	132	
AN960PD10	88044	73		AN960PD10	88044	132	
AN960PD10	88044	74		AN960PD10	88044	132	
AN960PD10	88044	75		AN960PD10	88044	132	40
AN960PD10	88044	75		AN960PD10	88044	136	
AN960PD10	88044	75		AN960PD10	88044	136	
AN960PD10	88044	77		AN960PD10	88044	136	
AN960PD10	88044	79		AN960PD10	88044	137	
AN960PD10	88044	81		AN960PD10	88044	138	
AN960PD10	88044	83		AN960PD10	88044	138	
AN960PD10	88044	84		AN960PD10	88044	138	
AN960PD10	88044	84		AN960PD10	88044	139	
AN960PD10	88044	85		AN960PD10	88044	140	
AN960PD10	88044	85		AN960PD10	88044	141	
AN960PD10	88044	85		AN960PD10	88044	144	
AN960PD10	88044	87		AN960PD10	88044	145	
AN960PD10	88044	87		AN960PD10	88044	148	
AN960PD10	88044	87		AN960PD10	88044	148	
AN960PD10	88044	87		AN960PD10	88044	148	
AN960PD10	88044	88		AN960PD10	88044	148	
AN960PD10	88044	89		AN960PD10	88044	149	
AN960PD10	88044	91		AN960PD10	88044	150	
AN960PD10	88044	96		AN960PD10	88044	152	
AN960PD10	88044	100		AN960PD10	88044	152	

REFERENCE NUMBER	MFG CODE	FIG NUMBER	ITEM NUMBER	REFERENCE NUMBER	MFG CODE	FIG NUMBER	ITEM NUMBER
AN960PD10	88044	154		AN960PD10L	88044	80	
AN960PD10	88044	158		AN960PD10L	88044	80	
AN960PD10	88044	159		AN960PD10L	88044	80	
AN960PD10	88044	162		AN960PD10L	88044	80	
AN960PD10	88044	165		AN960PD10L	88044	81	
AN960PD10	88044	172		AN960PD10L	88044	81	
AN960PD10	88044	178		AN960PD10L	88044	81	
AN960PD10	88044	180		AN960PD10L	88044	82	
AN960PD10	88044	182		AN960PD10L	88044	84	
AN960PD10L		KITS		AN960PD10L	88044	87	
AN960PD10L	88044	17		AN960PD10L	88044	90	
AN960PD10L	88044	32		AN960PD10L	88044	91	
AN960PD10L	88044	33		AN960PD10L	88044	92	5
AN960PD10L	88044	33		AN960PD10L	88044	94	
AN960PD10L	88044	33		AN960PD10L	88044	95	
AN960PD10L	88044	35		AN960PD10L	88044	96	
AN960PD10L	88044	35		AN960PD10L	88044	101	
AN960PD10L	88044	35		AN960PD10L	88044	105	
AN960PD10L	88044	37		AN960PD10L	88044	106	
AN960PD10L	88044	39		AN960PD10L	88044	112	
AN960PD10L	88044	41		AN960PD10L	88044	115	
AN960PD10L	88044	41		AN960PD10L	88044	116	
AN960PD10L	88044	41		AN960PD10L	88044	116	
AN960PD10L	88044	42		AN960PD10L	88044	118	
AN960PD10L	88044	43		AN960PD10L	88044	119	
AN960PD10L	88044	43	87	AN960PD10L	88044	122	
AN960PD10L	88044	44		AN960PD10L	88044	125	
AN960PD10L	88044	45		AN960PD10L	88044	132	
AN960PD10L	88044	46		AN960PD10L	88044	138	
AN960PD10L	88044	48		AN960PD10L	88044	140	
AN960PD10L	88044	49		AN960PD10L	88044	141	
AN960PD10L	88044	49		AN960PD10L	88044	141	
AN960PD10L	88044	49		AN960PD10L	88044	144	
AN960PD10L	88044	49		AN960PD10L	88044	145	
AN960PD10L	88044	49		AN960PD10L	88044	145	
AN960PD10L	88044	50		AN960PD10L	88044	145	
AN960PD10L	88044	50		AN960PD10L	88044	147	
AN960PD10L	88044	50		AN960PD10L	88044	148	
AN960PD10L	88044	50	61	AN960PD10L	88044	149	
AN960PD10L	88044	52		AN960PD10L	88044	150	
AN960PD10L	88044	54		AN960PD10L	88044	152	
AN960PD10L	88044	55		AN960PD10L	88044	154	
AN960PD10L	88044	55	62	AN960PD10L	88044	169	
AN960PD10L	88044	56		AN960PD10L	88044	169	20A
AN960PD10L	88044	56	64	AN960PD10L	88044	172	
AN960PD10L	88044	56	95	AN960PD10L	88044	173	
AN960PD10L	88044	57		AN960PD10L	88044	173	
AN960PD10L	88044	58		AN960PD10L	88044	176	
AN960PD10L	88044	59		AN960PD1016		KITS	
AN960PD10L	88044	60		AN960PD1016		KITS	
AN960PD10L	88044	63		AN960PD1016	88044	83	22
AN960PD10L	88044	64		AN960PD1216	88044	145	
AN960PD10L	88044	67		AN960PD1216	88044	145	
AN960PD10L	88044	70		AN960PD1416	88044	41	
AN960PD10L	88044	71		AN960PD1416	88044	80	124
AN960PD10L	88044	72		AN960PD1416	88044	81	107
AN960PD10L	88044	74		AN960PD1416	88044	145	
AN960PD10L	88044	75		AN960PD1416	88044	145	
AN960PD10L	88044	75		AN960PD1716	88044	182	
AN960PD10L	88044	77		AN960PD2116	88044	174	
AN960PD10L	88044	78		AN960PD2116	88044	182	
AN960PD10L	88044	78	13	AN960PD2116	88044	174	
AN960PD10L	88044	78	2	AN960PD3	88044	139	
AN960PD10L	88044	79					
AN960PD10L	88044	79					
AN960PD10L	88044	79					
AN960PD10L	88044	79					
AN960PD10L	88044	79					
AN960PD10L	88044	79					
AN960PD10L	88044	79					
AN960PD10L	88044	79	138				

REFERENCE NUMBER	MFG CODE	FIG NUMBER	ITEM NUMBER
AN960PD416		KITS	
AN960PD416		KITS	
AN960PD416	88044	11	
AN960PD416	88044	11	28
AN960PD416	88044	12	49
AN960PD416	88044	17	
AN960PD416	88044	19	
AN960PD416	88044	21	
AN960PD416	88044	23	
AN960PD416	88044	24	
AN960PD416	88044	35	
AN960PD416	88044	37	
AN960PD416	88044	38	
AN960PD416	88044	39	
AN960PD416	88044	41	
AN960PD416	88044	41	
AN960PD416	88044	41	135
AN960PD416	88044	43	17
AN960PD416	88044	45	
AN960PD416	88044	45	
AN960PD416	88044	45	
AN960PD416	88044	48	
AN960PD416	88044	55	
AN960PD416	88044	56	
AN960PD416	88044	59	
AN960PD416	88044	60	
AN960PD416	88044	61	
AN960PD416	88044	62	1
AN960PD416	88044	62	13
AN960PD416	88044	66	
AN960PD416	88044	67	
AN960PD416	88044	69	
AN960PD416	88044	71	3
AN960PD416	88044	71	5
AN960PD416	88044	73	
AN960PD416	88044	76	
AN960PD416	88044	78	
AN960PD416	88044	79	
AN960PD416	88044	79	100
AN960PD416	88044	79	107
AN960PD416	88044	79	118
AN960PD416	88044	79	125
AN960PD416	88044	79	178
AN960PD416	88044	80	
AN960PD416	88044	81	
AN960PD416	88044	81	
AN960PD416	88044	84	
AN960PD416	88044	85	
AN960PD416	88044	87	
AN960PD416	88044	87	
AN960PD416	88044	87	
AN960PD416	88044	87	
AN960PD416	88044	87	
AN960PD416	88044	87	
AN960PD416	88044	87	
AN960PD416	88044	87	
AN960PD416	88044	88	
AN960PD416	88044	88	
AN960PD416	88044	88	
AN960PD416	88044	89	
AN960PD416	88044	91	
AN960PD416	88044	91	
AN960PD416	88044	91	
AN960PD416	88044	91	
AN960PD416	88044	93	
AN960PD416	88044	96	
AN960PD416	88044	96	
AN960PD416	88044	96	
AN960PD416	88044	96	
AN960PD416	88044	99	
AN960PD416	88044	101	
AN960PD416	88044	102	
AN960PD416	88044	105	
AN960PD416	88044	107	
AN960PD416	88044	108	
AN960PD416	88044	109	
AN960PD416	88044	116	
AN960PD416	88044	117	
AN960PD416	88044	117	
AN960PD416	88044	117	
AN960PD416	88044	117	
AN960PD416	88044	117	
AN960PD416	88044	117	
AN960PD416	88044	117	
AN960PD416	88044	117	
AN960PD416	88044	117	
AN960PD416	88044	117	
AN960PD416	88044	117	
AN960PD416	88044	117	4
AN960PD416	88044	118	
AN960PD416	88044	118	
AN960PD416	88044	118	
AN960PD416	88044	118	
AN960PD416	88044	118	
AN960PD416	88044	118	110
AN960PD416	88044	118	118
AN960PD416	88044	118	143
AN960PD416	88044	118	43
AN960PD416	88044	118	92
AN960PD416	88044	119	
AN960PD416	88044	122	
AN960PD416	88044	122	
AN960PD416	88044	124	
AN960PD416	88044	129	
AN960PD416	88044	129	
AN960PD416	88044	129	
AN960PD416	88044	138	
AN960PD416	88044	138	
AN960PD416	88044	145	
AN960PD416	88044	152	
AN960PD416	88044	152	
AN960PD416	88044	153	
AN960PD416	88044	156	
AN960PD416	88044	159	
AN960PD416	88044	165	
AN960PD416	88044	165	
AN960PD416	88044	174	
AN960PD416	88044	83A	4
AN960PD416L		KITS	
AN960PD416L	88044	17	
AN960PD416L	88044	25	
AN960PD416L	88044	32	
AN960PD416L	88044	37	
AN960PD416L	88044	38	
AN960PD416L	88044	39	
AN960PD416L	88044	41	
AN960PD416L	88044	41	
AN960PD416L	88044	41	
AN960PD416L	88044	43	
AN960PD416L	88044	45	

REFERENCE NUMBER	MFG CODE	FIG NUMBER	ITEM NUMBER	REFERENCE NUMBER	MFG CODE	FIG NUMBER	ITEM NUMBER
AN960PD416L	88044	46		AN960PD416L	88044	153	
AN960PD416L	88044	55		AN960PD416L	88044	155	
AN960PD416L	88044	56		AN960PD416L	88044	176	
AN960PD416L	88044	56	71	AN960PD516		KITS	
AN960PD416L	88044	58	2	AN960PD516		KITS	
AN960PD416L	88044	60		AN960PD516	88044	21	
AN960PD416L	88044	64		AN960PD516	88044	41	
AN960PD416L	88044	65		AN960PD516	88044	74	
AN960PD416L	88044	66		AN960PD516	88044	83	
AN960PD416L	88044	67		AN960PD516	88044	84	
AN960PD416L	88044	70		AN960PD516	88044	87	
AN960PD416L	88044	72		AN960PD516	88044	91	
AN960PD416L	88044	74	11	AN960PD516	88044	93	
AN960PD416L	88044	75		AN960PD516	88044	101	
AN960PD416L	88044	75	20	AN960PD516	88044	102	
AN960PD416L	88044	76		AN960PD516	88044	103	6
AN960PD416L	88044	78		AN960PD516	88044	105	
AN960PD416L	88044	79		AN960PD516	88044	116	
AN960PD416L	88044	79		AN960PD516	88044	116	14
AN960PD416L	88044	79		AN960PD516	88044	119	
AN960PD416L	88044	79		AN960PD516	88044	153	
AN960PD416L	88044	79		AN960PD516	88044	159	
AN960PD416L	88044	79		AN960PD516	88044	162	
AN960PD416L	88044	79		AN960PD516	88044	163	
AN960PD416L	88044	79		AN960PD516	88044	165	
AN960PD416L	88044	79		AN960PD516	88044	170	
AN960PD416L	88044	79		AN960PD516	88044	173	
AN960PD416L	88044	79	151	AN960PD516L	88044	32	
AN960PD416L	88044	79	154	AN960PD516L	88044	32	
AN960PD416L	88044	80		AN960PD516L	88044	32	178
AN960PD416L	88044	80		AN960PD516L	88044	37	
AN960PD416L	88044	80		AN960PD516L	88044	42	
AN960PD416L	88044	80		AN960PD516L	88044	50	
AN960PD416L	88044	80		AN960PD516L	88044	75	
AN960PD416L	88044	80		AN960PD516L	88044	87	
AN960PD416L	88044	80		AN960PD516L	88044	101	
AN960PD416L	88044	80		AN960PD516L	88044	102	
AN960PD416L	88044	81		AN960PD516L	88044	105	
AN960PD416L	88044	81		AN960PD516L	88044	115	65
AN960PD416L	88044	81		AN960PD516L	88044	119	18
AN960PD416L	88044	81		AN960PD516L	88044	120	10
AN960PD416L	88044	81		AN960PD516L	88044	120	54
AN960PD416L	88044	81		AN960PD516L	88044	120	59
AN960PD416L	88044	81		AN960PD516L	88044	120	65
AN960PD416L	88044	87		AN960PD516L	88044	125	
AN960PD416L	88044	87		AN960PD516L	88044	125	
AN960PD416L	88044	87		AN960PD516L	88044	160	
AN960PD416L	88044	87		AN960PD516L	88044	163	
AN960PD416L	88044	87		AN960PD516L	88044	169	34
AN960PD416L	88044	87		AN960PD6		KITS	
AN960PD416L	88044	87		AN960PD6	88044	11	
AN960PD416L	88044	87		AN960PD6	88044	47	
AN960PD416L	88044	87		AN960PD6	88044	95	
AN960PD416L	88044	90		AN960PD6	88044	115	
AN960PD416L	88044	96		AN960PD6	88044	128	
AN960PD416L	88044	96		AN960PD6	88044	130	
AN960PD416L	88044	96		AN960PD6	88044	131	
AN960PD416L	88044	97		AN960PD6	88044	131	
AN960PD416L	88044	98		AN960PD6	88044	131	
AN960PD416L	88044	101		AN960PD6	88044	131	
AN960PD416L	88044	101		AN960PD6	88044	131	
AN960PD416L	88044	101		AN960PD6	88044	132	
AN960PD416L	88044	105		AN960PD6	88044	132	
AN960PD416L	88044	107		AN960PD6	88044	132	
AN960PD416L	88044	116		AN960PD6	88044	132	
AN960PD416L	88044	117		AN960PD6	88044	134	
AN960PD416L	88044	125		AN960PD6	88044	138	
AN960PD416L	88044	125		AN960PD6	88044	139	
AN960PD416L	88044	125		AN960PD6	88044	140	
AN960PD416L	88044	129		AN960PD6	88044	141	
AN960PD416L	88044	151		AN960PD6	88044	154	

REFERENCE NUMBER	MFG CODE	FIG NUMBER	ITEM NUMBER	REFERENCE NUMBER	MFG CODE	FIG NUMBER	ITEM NUMBER
AN960PD6	88044	85B	27	AN960PD8	88044	116	
AN960PD6L	88044	55		AN960PD8	88044	118	
AN960PD6L	88044	57		AN960PD8	88044	122	
AN960PD6L	88044	77		AN960PD8	88044	123	
AN960PD6L	88044	77		AN960PD8	88044	126	
AN960PD6L	88044	94		AN960PD8	88044	128	
AN960PD6L	88044	96		AN960PD8	88044	129	
AN960PD6L	88044	96		AN960PD8	88044	130	
AN960PD6L	88044	104		AN960PD8	88044	130	9
AN960PD6L	88044	106		AN960PD8	88044	131	
AN960PD6L	88044	118		AN960PD8	88044	131	
AN960PD6L	88044	118		AN960PD8	88044	131	
AN960PD6L	88044	118		AN960PD8	88044	131	
AN960PD6L	88044	130		AN960PD8	88044	131	
AN960PD6L	88044	131		AN960PD8	88044	132	
AN960PD6L	88044	132		AN960PD8	88044	132	
AN960PD6L	88044	136		AN960PD8	88044	132	
AN960PD6L	88044	138		AN960PD8	88044	132	
AN960PD6L	88044	139		AN960PD8	88044	132	
AN960PD616		KITS		AN960PD8	88044	133	
AN960PD616	88044	11	21	AN960PD8	88044	138	
AN960PD616	88044	12		AN960PD8	88044	138	
AN960PD616	88044	39	6	AN960PD8	88044	139	
AN960PD616	88044	50	113	AN960PD8	88044	139	
AN960PD616	88044	84		AN960PD8	88044	140	
AN960PD616	88044	87		AN960PD8	88044	146	
AN960PD616	88044	93		AN960PD8	88044	149	
AN960PD616	88044	132		AN960PD8	88044	152	
AN960PD616	88044	165		AN960PD8	88044	153	
AN960PD616	88044	172	94	AN960PD8	88044	154	
AN960PD616L		KITS		AN960PD8	88044	154	
AN960PD616L	88044	12		AN960PD8	88044	154	
AN960PD616L	88044	98		AN960PD8	88044	170	
AN960PD616L	88044	99		AN960PD8	88044	170	
AN960PD616L	88044	125		AN960PD8L	88044	34	
AN960PD616L	88044	170	17	AN960PD8L	88044	77	
AN960PD616L	88044	170	20	AN960PD816	88044	39	3
AN960PD716		KITS		AN960PD816	88044	167	
AN960PD716	88044	12		AN960PD816L	88044	39	4
AN960PD716	88044	85		AN960PD916	88044	123	71
AN960PD716	88044	145		AN960PD916	88044	145	
AN960PD716	88044	181		AN961-516	88044	130	1
AN960PD716L		KITS		AN961-6	88044	131	68
AN960PD716L	88044	12		AN961-6	88044	131	76
AN960PD716L	88044	162		AN961-616	88044	131	
AN960PD8		KITS		AN961-616	88044	131	82
AN960PD8		KITS		AN961-616	88044	138	18
AN960PD8	88044	41		AN961-8	88044	BULK	
AN960PD8	88044	42		AN961-8	88044	1238	3
AN960PD8	88044	43		AN970-3	88044	35	
AN960PD8	88044	43	3	AN970-3	88044	63	
AN960PD8	88044	44		AN970-3	88044	101	
AN960PD8	88044	45		AN970-3	88044	116	
AN960PD8	88044	46		AN970-3	88044	132	
AN960PD8	88044	48		AN970-3	88044	182	
AN960PD8	88044	50		AN970-4	88044	119	
AN960PD8	88044	57		AN970-4	88044	169	37
AN960PD8	88044	58		AN970-4	88044	169	57A
AN960PD8	88044	68		AN970-4	88044	169	59A
AN960PD8	88044	70		AN970-4	88044	169	64A
AN960PD8	88044	75		AN970-4	88044	169	66A
AN960PD8	88044	78		AN970-4	88044	169	78A
AN960PD8	88044	94		AN970-4	88044	169	80A
AN960PD8	88044	100		AN975-2	88044	73	
AN960PD8	88044	101		AN975-3	88044	55	
AN960PD8	88044	102		AN975-3	88044	57	
AN960PD8	88044	104		AN975-3	88044	62	
AN960PD8	88044	106		AN975-3	88044	70	
AN960PD8	88044	108		AN975-3	88044	71	
AN960PD8	88044	115		AN975-3	88044	72	
AN960PD8	88044	115		AN975-3	88044	87	

REFERENCE NUMBER	MFG CODE	FIG NUMBER	ITEM NUMBER	REFERENCE NUMBER	MFG CODE	FIG NUMBER	TEM NUMBER
AN975-3	88044	97		AS90208		KITS	
AN975-3	88044	101		AS90210	90299	79A	50
AN975-3	88044	107		AS90210	90299	79A	77
AN975-3	88044	107		AS90211	90299	79A	57
AN975-3	88044	170		AS90345	90299	79A	54
AN975-4		KITS		AS90345		KITS	
AN975-4	88044	93		AS90666		KITS	
AN975-4	88044	104		AS90666	90299	79A	59
AN975-4	88044	158		AS90666	90299	79A	61
AN975-4	88044	158		AS91321	90299	81A	65
AN99NC32	88044	81A		AS91321	90299	KITS	
AN991-5-9	88044	131	21	AS91321		KITS	
AN995C20-5		KITS		AS92225		KITS	
AN995C32-9		KITS		AS92226	90299	81A	66
AN995C41-4		KITS		AS92226	90299	KITS	
AN995C62-6		KITS		AS92226		KITS	
AN995NC32-4		KITS		AS98434	90299	79A	63
AN995NC32-48		KITS		AS98434		KITS	
AN995NC40-30	81348	BULK		AS98435	90299	79A	55
AN996-20	88044	152	29	AS98435		KITS	
AN996-32	88044	BULK		AT1890	81039	A1A	
AP272E	61349	113C	4	AT1939	81039	A1A	
AP29	19315	113E	241	AT1977	81039	A1A	
AP41A1	19315	113E		AT2878	81039	A1A	
AS80336		KITS		AT3042	81039	A1A	
AS80359	90299	81A	63	AU283H	61349	113C	21
AS80359	90299	KITS		AV1B1474B	73760	124	13
AS80359		KITS		AV1B1474B	73760	124	76
AS80683	90299	KITS		AV132365N72	91547	194	
AS88228	90299	81A	64	AV132365N82	91547	192	
AS88228		KITS		AV16B1354C	73760	75	
AS89536	90299	81A	59	AV16B1456C	73760	75	24
AS89537	51663	81A	72	AV45D1	80254	198	21
AS89538	90299	81A	62	AW3-10A	61349	113	
AS89539	90299	81A	71	AW3-10A	61349	114	
AS89540	90299	81A	70	AW3-10A	61349	113C	
AS89541	90299	81A	69	AW4-25	72794	50	233
AS89543	90299	81A	55	AW4-30	72794	50	
AS89546	90299	81A	60	AW4-45	72794	50	
AS89546		KITS		AZ31B	81348	BULK	
AS89546	90299	KITS		A09C33	58588	123	57
AS89547	11976	81A	57	A1-4318-1	71643	42	68
AS89547	90299	KITS		A10K75	25472	132	
AS89547		KITS		A10K75	25472	136	
AS89548		KITS		A100H	77326	138	43
AS89548	90299	79A	58	A100H	77326	139	35
AS89548	90299	81A	54	A1038	98810	114T	43
AS89549	90299	81A	61	A10390	07639	125A	87
AS89549		KITS		A10493	35662	BULK	
AS89549	90299	KITS		A1084	98810	114T	72
AS89572	11976	81A	40	A1086	98810	114T	56
AS89654	51663	81A	67	A1089	98810	114T	71
AS89733	11976	81A	49	A1093	98810	114T	76
AS89734	90299	79A	68	A1120	80510	114F	4
AS89734	90299	79A	75	A1134	80510	114F	10
AS89734	90299	81A	39	A13C86	58588	123A	39
AS89734	11976	81A	48	A1324	06275	114E	6
AS89734	90299	KITS		A1352	98810	114T	23
AS89734		KITS		A14C07	58588	123A	31
AS89747	90299	81A	51	A14C08	58588	123A	22
AS89747		KITS		A1428	06275	114E	
AS89748	11976	81A		A1428	80510	114F	
AS90172	51663	79A		A1478	80510	114F	59
AS90200	90299	79A	62	A1479	80510	114F	57
AS90204	51663	79A	60	A1480	80510	114F	8
AS90205	90299	79A	72	A1538	80510	114F	6
AS90206	90299	79A	51	A1540	80510	114F	9
AS90206		KITS		A1541	80510	114F	5
AS90207	90299	79A		A1545	80510	114F	7
AS90208	90299	79A	69	A1547	80510	114F	48
AS90208	90299	79A	76	A1548	80510	114F	63

REFERENCE NUMBER	MFG CODE	FIG NUMBER	ITEM NUMBER	REFERENCE NUMBER	MFG CODE	FIG NUMBER	ITEM NUMBER
A1555	80510	114F	3	A50J251-4	83843	11	
A1561	80510	114F	42	A50MB	98810	114	
A1562	76275	114F		A512BL5-1-200	86794	F2	
A1564	80510	114F	40	A5610	72914	113	8
A1569	80510	114F		A5934-51	78553	140	34
A1571	80510	114F	2	A5934-51	78553	140	40
A1574	80510	114F	60	A5934-51	78553	BULK	
A1575	80510	114F		A5991	72914	128A	170
A1581	80510	114F	33	A6100C	72914	11	43
A1583	80510	114F	50	A6264-8Z1	78553	137	39
A1590	80510	114F	1	A63-45-7	74080	BULK	
A1598	76275	114F		A6540	72914	128A	117
A1600	80510	113		A6573	72914	128A	84
A1600	80510	114		A6577	72914	128A	167
A1600	80510	114F		A6580	72914	128A	82
A1600A	80510	113		A6582	72914	128A	85
A1600A	80510	114		A6585A	72914	128A	90
A16075-164	00736	28	9	A6588	72914	128A	145
A16075-211	00736	28	10	A6590	72914	128A	157
A16075-56	00736	28	7	A6594	72914	128A	
A16075-79	00736	28	8	A6595	72914	128A	143
A16367-110	00736	28	17	A6596	72914	128A	153
A16367-213	00736	28	15	A6597	72914	128A	159
A1637	80510	114E	106	A6598	72914	128A	152
A1637	80510	114F	56	A6815-24	72914	113	
A17D5070		KITS		A6815-24	72914	114	
A19C7162		KITS		A6815-24	72914	BULK	
A19C7440	83843	123B	34	A6870	72914	128A	101
A190D586	72914	128A	184	A6873	72914	128A	163
A1908-1	98810	114T		A6873	72914	128A	93
A1908-2	98810	114T	22	A6874	72914	128A	111
A1932-8Z1	78553	BULK		A6876	72914	128A	104
A2025R2-15	53553	BULK		A6877	72914	128A	100
A21D600	25140	128A	179	A6878	72914	128A	97
A21D632	25140	128A	178	A6879	72914	128A	106
A2111	98810	114T	58	A6881	72914	128A	1
A2125	98810	114T	31	A6892	72914	128A	150
A23B2339	79500	123B	54	A6901	72914	128A	55
A23C47	58588	123	82	A6904	72914	128A	28
A24A9170	79500	138		A6906	72914	128A	3
A24A9170	79500	139		A6909	72914	128A	136
A24A9315-2A	83843	11		A6910	72914	128A	154
A261B	76883	109		A6912	72914	128A	133
A26422	06840	124	84	A6913	72914	128A	139
A2728-3	72914	128A	165	A6914	72914	128A	129
A28A854-1	83843	11		A6915	72914	128A	115
A28A8584-1T	83843	11		A6916	72914	128A	128
A28A8584-5	79500	11		A6917	72914	128A	124
A28A8639-2	88109	123B	23	A6918	72914	128A	140
A28A8664	83843	123B	49	A6919	72914	128A	161
A28934-04-002	89944	114		A6920	72914	128A	160
A2953	72914	130	14	A6926	72914	128A	50
A2953	72914	130	17	A6927	72914	128A	146
A2953	72914	130	47	A6927	72914	128A	47
A2953	72914	130	50	A6928	72914	128A	56
A3A605	76912	119	10	A6930	72914	128A	51
A3A605	76912	119	8	A6932	72914	128A	73
A3092	98810	114T	12	A6933	72914	128A	69
A3094	98810	114T		A6934	72914	128A	68
A31-200	03481	50		A6935	72914	128A	64
A32C94	89513	123A		A6936	72914	128A	65
A32D549	72914	128A	177	A6937	72914	128A	23
A32D569	25140	128A	176	A6939	72914	128A	125
A35A71	58588	123		A6939-632-250	78553	114C	
A38S	24161	83	10	A6943	72914	128A	162
A38S	24161	84	15	A6946	72914	128A	63
A3969	72914	128A	27	A6947	72914	128A	72
A4-25	72794	50		A6948	72914	128A	71
A40D553	25140	128A	183	A6954	72914	128A	79
A4613	72914	113	7	A7033	72560	76	
A4613	72914	114	10	A7033A1	24617	76	10A

REFERENCE NUMBER	MFG CODE	FIG NUMBER	ITEM NUMBER	REFERENCE NUMBER	MFG CODE	FIG NUMBER	ITEM NUMBER
A7034	15814	119	1	BL1520	08484	125A	137
A7040	15814	120	2	BL1521	08484	125A	24
A7079-24	72914	154		BL1522	08484	125A	43
A7175W	97484	25		BL1523		KITS	
A720	97484	25		BL1523	08484	125A	136
A7213W	97484	25	30	BL1524	08484	125A	108
A722		KITS		BL1525	08484	125A	150
A722	97484	25	30	BL1527		KITS	
A722	97484	157	27	BL1527	08484	125A	64
A722	97484	158	1	BL1528	08484	125A	130
A7632	72914	154		BL1529	08484	125A	101
A7634	72914	154		BL1530	08484	125A	127
A7635A	72914	154		BL1531	08484	131	
A7798	72914	128A	87	BL1531	08484	125A	
A7799	72914	128A	164	BL1532	08484	125A	120
A7807	72914	128A	4	BL1534	08484	125A	66
A7942	72914	154		BL1535		KITS	
A81864	72914	128A	26	BL1535	08484	125A	65
A8565-821	78553	129	38	BL1542	08484	125A	57
A8565-821	78553	129	40	BL1543	08484	125A	58
A875	13730	20	16	BL1546	08484	125A	44
A880	13730	119	22	BL1547		KITS	
A88564-1	75477	123B	28	BL1547	08484	125A	45
A88911	75477	83A	7	BL1551	08484	125A	88
A88912	75477	83A	12	BL1553	08484	125A	112
A88913	75477	84		BL1555	08484	125A	7
A88913	75477	83A	3	BL1556		KITS	
A9D680	25140	128A	181	BL1556	08484	125A	10
A9D729	25140	128A	175	BL1557		KITS	
A9D729	25140	128A	182	BL1557	08484	125A	131
BA5-15	66640	211		BL1558	08484	125A	91
BA5-16	94592	211		BL1559	08484	125A	125
BG341	05045	213		BL1560	08484	125A	145
BH3646D	61349	113C	3	BL1566	08484	125A	83
BLS4CLO-25	84256	50	394	BL1567	08484	125A	84
BL1061	08484	125A	92	BL1569		KITS	
BL1170	08484	125	17	BL1569	08484	125A	51
BL1297		KITS		BL1570	08484	125A	67
BL1297	08484	125A	155	BL1571	08484	125A	115
BL1310		KITS		BL1572	08484	125	18
BL1310	08484	125A	128	BL1572	08484	125A	18
BL1315-1	08484	125		BL1575	08484	125A	11
BL1315-11	08484	125	1	BL1576	08484	125A	20
BL1315-11	08484	125A		BL1578		KITS	
BL1332	08484	125A	119	BL1578	08484	125A	9
BL1359	08484	125		BL1579	08484	125A	135
BL1486	08484	125A	97	BL1580	08484	125A	
BL1487	08484	125A		BL1772	08484	125A	121
BL1488	08484	125A	12	BL1773		KITS	
BL1489	08484	125A	85	BL1773	08484	125A	122
BL1490	08484	125A	46	BL1775	08484	125A	118
BL1491	08484	125A	56	BL1821	08484	125A	129
BL1492	08484	125A	113	BL1822		KITS	
BL1493	08484	125A	78	BL1822	08484	125A	151
BL1495	08484	125A	52	BL1841	08484	125A	40
BL1496	08484	125A	139	BL1843	08484	125A	39
BL1497	08484	125A	110	BL1844-3		KITS	
BL1498	08484	125A		BL1844-3	08484	125A	61
BL1500	08484	125A	133	BL1888		KITS	
BL1501	08484	125A	148	BL1889		KITS	
BL1502	08484	125A	142	BL1919		KITS	
BL1508	08484	125A	141	BL1919	08484	125A	152
BL1509	08484	125A	132	BL2294		KITS	
BL1511		KITS		BL2294	08484	125A	154
BL1511	08484	125A	72	BL2831	08484	125A	32
BL1512	08484	125A	109	BL2845	08484	125A	28
BL1513	08484	125A	149	BL2984	08484	KITS	
BL1515	08484	125A	103	BL2984	08484	125A	
BL1516	08484	125A	16	BL2985	08484	KITS	
BL1518	08484	125A	96	BL2985	08484	125A	
BL1519	08484	125A	94	BL4-1-200	84256	118	

REFERENCE NUMBER	MFG CODE	FIG NUMBER	ITEM NUMBER	REFERENCE NUMBER	MFG CODE	FIG NUMBER	ITEM NUMBER
BL5	08484	125A		B3-141	79318	114J	96
BL655-10-56F		KITS		B3-142	79318	114G	117
BL655-10-56F	08484	125A	143	B3-144	79318	114H	
BL656-6-20F		KITS		B3-144	79318	114J	
BL656-6-20FH	08484	125A	73	B3-146	79318	114G	118
BL747		KITS		B3-146	79318	114H	107
BL747	08484	125A	27	B3-146	79318	114H	113
BL756	08484	125A	23	B3-146	79318	114J	92
BL758	08484	125A	21	B3-146	79318	114J	98
BL761		KITS		B3A114	79318	114G	
BL761	08484	125A	25	B4	79318	113	
BL797	08484	125A	30	B4	79318	114	
BL8	08484	125A	146	B4	79318	114J	
BL804	08484	125A	22	B4-110	79318	114G	22
BL806	08484	125A	14	B4-110	79318	114H	24
BM282B	61349	113C	8	B4-110	79318	114J	18
BRA3		KITS		B4-113	79318	114H	27
BR12120H	60380	97	33	B4-12	79318	114G	1
BR91	51600	24		B4-12	79318	114H	2
BUA9860-1	22040	113	11	B4-12	02282	114J	2
BUA9860-1	22040	114	3	B4-128	79318	114G	31
BUA9860-1	22040	114	45	B4-128	79318	114H	32
BZE7RQ2TN	91929	55	100	B4-128	79318	114J	24
BZ2RDSA2	80648	104	19	B4-139	79318	114J	
BZ2RDSA2	80648	104	51	B4-140-1	79318	114G	123
BZ2RDSA2	80648	104	79	B4-140-1	79318	114H	115
BZ2RDSA2	80648	104	95	B4-140-1	79318	114J	100
BZ7RW822T03		KITS		B4-140-2	79318	114J	
B146-1J	19315	113E	50	B4-140-3	79318	114J	
B1516	60380	104	58	B4-140-4	79318	114J	
B16304		KITS		B4-140-5	79318	114J	
B16304	00736	28	11	B4-140-6	79318	114J	
B1636-2	99879	120	33A	B4-140-7	79318	114J	
B1636-2	99879	120	78A	B4-17	79318	114H	
B188	60390	178	4	B4-17	79318	114J	
B188	60380	BULK		B4-17-4	79318	114G	
B2-50B1SP6	81100	113A	88	B4-17-9	79318	114G	
B2-50B1SP6	81100	113A	94	B4-232-1	79318	114H	
B2-50B1SP6	88818	114R	71	B4-29	79318	114G	12
B2-50B1SP6	88818	114R	77	B4-29	79318	114H	14
B2012X0H	60380	104	20	B4-29	79318	114J	11
B2012X0H	60380	104	52	B4-29-2	79318	114G	
B2012X0H	60380	104	80	B4A	79318	113	
B2012X0H	60380	104	96	B4A	79318	114	
B24C14	89513	A1A		B4A	79318	114H	
B3-112	79318	114H	112	B4A1B24	79318	114G	7
B3-112	79318	114J	97	B4A1B24	79318	114H	8
B3-113	79318	114G	107	B4A1B24	79318	114J	6
B3-113	79318	114H	103	B4A111	79318	114G	124
B3-113	79318	114J	88	B4A111	79318	114H	116
B3-114	79318	114H	25	B4A115	79318	114H	
B3-114	79318	114J	19	B4A115-9	79318	114G	
B3-115	79318	114G	110	B4A116	79318	114G	18
B3-115	79318	114H	106	B4A116-1	79318	114G	
B3-115	79318	114J	91	B4A118	79318	114G	42
B3-117	79318	114G	113	B4A118	79318	114H	45
B3-117	79318	114H	108	B4A119	79318	114H	41
B3-117	79318	114J	93	B4A12	79318	114H	
B3-118	79318	114G		B4A121	02282	114G	41
B3-118	79318	114H		B4A121	02282	114H	44
B3-118	79318	114J		B4A123	79318	114H	
B3-137	79318	114G	106	B4A126	79318	114G	
B3-137	79318	114H	102	B4A126	79318	114H	
B3-137	79318	114J	87	B4A136	79318	114H	
B3-139	79318	114H		B4A14	79318	114G	2
B3-139	79318	114J		B4A14	79318	114H	3
B3-140	79318	114G	114	B4A15	79318	114H	4
B3-140	79318	114H	109	B4A16	79318	114H	
B3-140	79318	114J	94	B4A19	79318	114H	46
B3-141	79318	114G	116	B4A210	79318	114H	
B3-141	79318	114H	111	B4A412	79318	114H	117

REFERENCE NUMBER	MFG CODE	FIG NUMBER	ITEM NUMBER	REFERENCE NUMBER	MFG CODE	FIG NUMBER	ITEM NUMBER
B4B	79318	113		CB2100-2	70214	109	
B4B	79318	114		CB2100M	70214	109	
B4B	79318	114G		CC404	07971	A1	
B4BD	79318	113		CD48A	36540	200	32
B4BD	79318	114		CD48A	36540	207	44
B4BD	79318	114G		CE9147	11599	175	
B4BK	79318	113		CF4F	79550	82	16
B4BK	79318	114		CF4F	79550	155	15
B4BK	79318	114G		CF4F	79550	155	36
B4B184	79318	114G	46	CH34M6E1	78286	225	
B4B115-7	79318	114G		CH6H	79550	183	7
B4B119	79318	114G	38	CKLP5C	29666	BULK	
B4B13	79318	114G		CKLP5E	29666	BULK	
B4B143-1	79318	114G		CKLP5G	29666	BULK	
B4B216-1	79318	114G		CKLP5K	29666	49	
B4B216-2	79318	114G	3	CKLP5L	29666	49	
B4B242	02282	114G		CKLP5L	29666	BULK	
B4B245-1	02282	114G		CKL100V4A	29666	BULK	
B4B25	79318	114G		CKL100YVA	29666	BULK	
B4B46	79318	114G	125	CK1005-7B1	19315	113E	83
B401	61864	121	1	CK1005-7B3	19315	113E	
B407RD	84256	141	21	CK1047-23A1	19315	113E	84
B414RD	07059	118	132	CM14326	12697	130	26
B414RD	07059	118	32	CM14327	12697	130	25
B414RD	07059	118	86	CM14328	12697	130	27
B4755	72914	113	12	CM14366	12697	130	28
B4755	72914	113	14	CM15E161J	83296	113B	81
B4755	72914	113	15	CM15F511J03	81349	113B	32
B4755	72914	113	29	CM15F511J03	81349	113B	43
B4755	72914	113	30	COMM		115	103
B4755	72914	113	4	COMM		116	19
B4755	72914	113	5	COMM		116	22
B4755	72914	113	9	COMM		116	28
B4755	72914	114		CP04A1KB333K	83296	113B	86
B4755	72914	114	1	CR2781M155D1	24446	138	
B4755	72914	114	12	CR2781M155D1	24446	139	
B4755	72914	114	17	CR2795A100A1	24445	138	
B4755	72914	114	18	CR2795A100A1	24445	139	
B4755	72914	114	2	CR2795B100A1	24446	138	
B4755	72914	114	43	CR2795B100A1	24446	139	
B4755	72914	114	44	CR2795B105A1	24446	138	
B4755	72914	114	46	CR2795B105A1	24446	139	
B4755	72914	114	47	CR2795E100A1	24446	138	
B4755	72914	114	5	CR2795E100A1	24446	139	
B4755	72914	114	6	CVC754-220D13	80378	84A	21
B4789	72914	113	3	CVC754-220D13	80378	84B	23
B4789	72914	114	19	CVC754-220D13	80378	162A	16
B4789	72914	114	38	CVC754-220D13	80378	162A	22
B4850	72914	114		C10C70	89513	123	
B539	21335	97	27	C1002	81640	131	3
B6529	72914	128A	76	C1002	81640	132	29
B6530	72914	128A	112	C1006	81640	129	5
B6535-1	72914	128A	16	C1006	81640	129	8
B6702	72914	128A	8	C1006	81640	133	12
B6880	72914	128A	94	C13B	75238	109	
B6885-1	72914	128A	20	C13C86	58588	123A	40
B6886	72914	128A	17	C155-25-12	00624	181	14
B6888	72914	128A	32	C155-25-12	00624	181	21
B6889-1	72914	128A	31	C155-25-12	00624	181	28
B6908	72914	128A	108	C155-25-5	00624	162	
B6921	72914	128A	120	C2A	56232	109	
B6925	72914	128A	149	C2C	92377	109	
B6938	72914	128A	60	C2300	70214	109	
B90060A2	01881	210	6	C25A523	25140	128A	
B9310SNR	51240	109		C2893410007	89944	114	
B96A55	58588	123A	20	C2893410007	89944	114L	
CA011749-0001	71468	BULK		C3A1203	25140	128A	
CA011749-0001	88044	140	29	C32C94	85913	113F	10
CA011749-0001	71468	140	16	C32C94	89513	123A	
CA011749-001	71468	141	28	C40-801495-1	80201	178	
CB2100	70214	109					

REFERENCE NUMBER	MFG CODE	FIG NUMBER	ITEM NUMBER	REFERENCE NUMBER	MFG CODE	FIG NUMBER	ITEM NUMBER
C548	61864	115		C62908	80510	114E	73
C61-501	06275	114E	1	C62911X	80510	114F	
C61-903XX	06275	114E		C62912X	80510	114E	63
C61701	80510	114E	2	C62912X	80510	114F	
C61903	06275	114E	9	C62917X	80510	114F	81
C61905	80510	114E	7	C62921	80510	114F	77
C62-102X	06275	114E	85	C63-901X	06275	114E	
C62-109	80510	114E	66	C63101	80510	114E	98
C62-110X	06275	114E	70	C63101X	80510	114E	
C62-112X	06275	114E	72	C63101X	80510	114F	39
C62-114	06275	114E	68	C63102	80510	114E	94
C62-301X	06275	114E	71	C63102	80510	114F	37
C62-905X	80510	114E		C63103X	80510	114E	
C62-911X	06275	114E		C63103X	80510	114E	105
C62101	80510	114E	78	C63103X	80510	114F	45
C62101	80510	114F	94	C63104	80510	114E	103
C62102X	80510	114E	47	C63105	80510	114E	30
C62103	80510	114E	57	C63105	80510	114E	33
C62103	80510	114E	91	C63105	80510	114F	28
C62103	80510	114F	73	C63106X	80510	114E	37
C62103	80510	114F	91	C63106X	80510	114G	
C62103	80510	114G	56	C63106X	80510	114H	
C62103	80510	114H	56	C63109	80510	114E	36
C62103	80510	114J	43	C63109	80510	114F	32
C62104X	80510	114E	53	C63110	80510	114E	40
C62104X	80510	114F	69	C63112	80510	114E	114
C62104X	80510	114G	60	C63112	80510	114F	51
C62104X	80510	114H	60	C63401	80510	114E	102
C62104X	80510	114J	47	C63402	80510	114E	31
C62105	80510	114E	52	C63402X	80510	114E	
C62105	80510	114F	66	C63402X	80510	114F	26
C62106X	80510	114F	85	C63501	80510	114E	101
C62109	80510	114F	111	C63501	80510	114E	97
C62109X	80510	114E		C63502X	80510	114E	44
C62111X	80510	114E		C63504	80510	114E	100
C62111X	80510	114F	108	C63504	80510	114F	44
C62115	80510	114F	82	C63506	80510	114E	34
C62116X	80510	114E		C63506	80510	114F	30
C62116X	80510	114F	80	C63507	80510	114E	108
C62402X	80510	114E	62	C63507	80510	114F	47
C62402X	80510	114F	78	C63508	80510	114E	43
C62403	80510	114E	86	C63508	80510	114F	55
C62403	80510	114F	102	C63801	80510	114E	93
C62501	80510	114E	58	C63801	80510	114F	36
C62501	80510	114E	92	C63802	80510	114E	27
C62501	80510	114F	74	C63802	80510	114F	25
C62501	80510	114F	92	C63901	06275	114E	109
C62502	80510	114E	77	C63903	80510	114E	107
C62502	80510	114F	93	C63903	80510	114F	46
C62503	80510	114E	84	C63904	80510	114E	45
C62503	80510	114F	105	C63904X	80510	114E	
C62504	80510	114E	81	C63909	06275	114E	16
C62504	80510	114F	97	C63909	06275	114E	99
C62505	80510	114E		C63909	80510	114F	43
C62505	80510	114F		C63909	80510	114F	54
C62701	80510	114E	65	C64-102	06275	114E	22
C62701	80510	114F	112	C64102	80510	114F	21
C62702	80510	114E	64	C64103X	80510	114F	17
C62702	80510	114F	110	C64104-1	80510	114E	19
C62703	80510	114F	83	C64104-1	80510	114F	16
C62802X	80510	114E		C64104-2	80510	114E	
C62802X	80510	114F	106	C64104-2	80510	114F	
C62900X	80510	114E		C64104-2	80510	114G	
C62901	80510	114E	89	C64104-2	80510	114H	
C62903X	80510	114E		C64104-2	80510	114J	
C62903X	80510	114F	98	C64104-3	80510	114E	
C62905	80510	114E	59	C64104-3	80510	114F	
C62905	80510	114F		C64301	80510	114F	14
C62905	80510	114F	75	C64301X	80510	114E	
C62907	80510	114E	48	C64301X	80510	114F	
C62907	80510	114F	89	C64702	06275	114E	25

REFERENCE NUMBER	MFG CODE	FIG NUMBER	ITEM NUMBER	REFERENCE NUMBER	MFG CODE	FIG NUMBER	ITEM NUMBER
C64801	80510	114E	21	EAB380-10-0240-275	81996	32	164
C64801	80510	114F	19	EAB430	81996	38	
C64901	80510	114E	24	EAB430	81996	KITS	
C64901X	80510	114E		EAB440	81996	173	29
C64902	80510	114E	23	EAB440-10-0130	81996	84	3
C65-901XX	06275	114E	12	EAB440-4-0340	81996	125	19
C65902	80510	114E	11	EAB440-6-0230	81996	32	184
DC10	90299	79A	39	EAB440-8-0180	81996	32	151
DC2	11976	81A		EAB440-8-0230	81996	32	34
DC2	11976	81A	22	EAB501	81996	25	
DD202	71590	113B	31	EAB521	81996	25	
DSP6	21335	21	18	EAB530	81996	BULK	
DSRP4	21335	93	21	EAB531	81996	25	40
DSRP4	21335	93	24	EAB560	81996	27	
DSRP4	21335	93	9	EAB575	81996	BULK	
DSRP8	21335	107	77	EAB622-2	81996	BULK	
DW3K2	21335	169	55	EAB675	81996	11	16
DW4K		KITS		EAB676	81996	BULK	
DW4K	21335	55	77	EAB700-12	81996	41	96
DW4K	21335	158	49	EAB700-14	81996	BULK	
DW4K	21335	159	12	EAB700-16	81996	174	
DW4K	21335	159	37	EAB700-17	81996	210	34
DW5	21335	91	19	EAB700-2	81996	BULK	
DW5	21335	91	22	EAB700-20	81996	75	1
DW5	21335	153	12	EAB700-20	81996	133	3
DW5	21335	159	19	EAB700-27	81996	176	45
DW6	21335	87		EAB700-5	81996	137	38
DW61-1000-22	95135	MSUP		EAB700-6	81996	122	5
DW8E5729	21335	38	28	EAB700-6	81996	122	7
DYKEMSTEELBLUE	98148	MSUP		EAB700-6	81996	BULK	
DO-7163-04-052	89944	113		EAB700-7	81996	BULK	
DO-7163-04-052	89944	114		EAB700-8	81996	154	231
DO7163-04-052	89944	114B		EAB700-8	81996	BULK	
D12-05461S	70138	79B		EAB700D10	81996	77	47
D2-35932	38443	125A	117	EAB700D10	81996	BULK	
D202L5	81640	113	27	EAB700D11	96906	BULK	
D202L5	81640	114	30	EAB700D12	81996	BULK	
D389A1	98425	A1		EAB700D13	81996	BULK	
D6-1001-3-2A	45402	56	59	EAB700D14	81996	85	42
D62933	14471	12	72	EAB700D15	81996	BULK	
D63X979	73680	157		EAB700D16	81996	BULK	
D65X1258	73680	158		EAB700D17	81996	213A	2
D65X255	76700	25		EAB700D18	81996	BULK	
D65X3275	73680	23	1	EAB700D2	81996	BULK	
D65X979-21195	03668	157		EAB700D20	81996	BULK	
D6542	72914	128A	46	EAB700D21	81996	74	78
D6543	72914	128A	58	EAB700D21	81996	75	94
D6890-1	72914	128A	42	EAB700D23	81996	176	68
D6903-1	72914	128A	107	EAB700D24	81996	136	48
D6923	72914	128A	15	EAB700D24	81996	176	60
D6924	72914	128A	6	EAB700D24	81996	176	63
D6940	72914	128A	59	EAB700D24	81996	176	69
D730	78286	A1	2	EAB700D24	81996	BULK	
EAB 440-6-0230	81996	32	185	EAB700D25	81996	BULK	
EAB1400	81996	BULK		EAB700D27	81996	BULK	
				EAB700D3	81996	136	12
				EAB700D3	81996	136	16
				EAB700D3	81996	136	28
				EAB700D3	81996	136	31
				EAB700D3	81996	136	44
				EAB700D3	81996	136	49
EAB1724	81996	BULK		EAB700D3	81996	136	9
EAB20	81996	K2		EAB700D3	81996	BULK	
EAB20	81996	41		EAB700D30	81996	BULK	
EAB20	81996	KITS		EAB700D35	81996	85	27
EAB20	81996	MSUP		EAB700D38	81996	165	2
EAB210	81996	K4		EAB700D4	81996	79	143
EAB210	81996	BULK		EAB700D4	81996	162	4
EAB370-10-0420	81996	145	1	EAB700D4	81996	162	7
EAB370-8-0480-0	81996	145	7	EAB700D4	81996	BULK	
EAB380-10-0190-180	81996	181	8	EAB700D58	81996	165	3

REFERENCE NUMBER	MFG CODE	FIG NUMBER	ITEM NUMBER	REFERENCE NUMBER	MFG CODE	FIG NUMBER	ITEM NUMBER
EAB700D6	81996	41		E2740M20-2	81039	90A	48
EAB700D6	81996	130	15	E2917M1		KITS	
EAB700D6	81996	130	18	E3-10673-1	84639	A1	
EAB700D6	81996	BULK		E3188M1		KITS	
EAB700D7	81996	26		E3270M1	81039	90A	24
EAB700D7	81996	130	48	E3274	81039	90A	34
EAB700D7	81996	130	51	E3275	81039	90A	31
EAB700D7	81996	213A	1	E3276	81039	90A	32
EAB700D8	81996	BULK		E3277	81039	90A	35
EAB700D9	81996	133	4	E381		KITS	
EAB700D9	81996	BULK		E381	81039	90A	14
EAB70008	81996	215	3	E381	81039	90A	38
EAB720026	81996	152	34	E3910	81039	90A	6
EAB79B0	81996	BULK		E3923M1		KITS	
EB070		KITS		E4594	81039	90A	44
EB108		KITS		E4624	81039	90A	15
EB108	72962	16	22	E4627	81039	90A	41
EB108	72962	BULK		E4684	81039	90A	29
EB1216	84460	BULK		E489		KITS	
EB144	72962	36	33	E489	81039	90A	30
EC1001	71379	115		E4965		KITS	
EC1184	76381	MSUP		E779	81039	90A	18
EC750	76381	MSUP		E779		KITS	
EC776	76381	MSUP		E8501		KITS	
EC801	76381	MSUP		E878		KITS	
EFM18	35918	128	22	E878	81039	90A	13
EPON828	86961	MSUP		E878	81039	90A	39
EPON6	86961	MSUP		FA1036	72171	BULK	
EV10399	96452	74		FA3154	81831	123B	7
E02C96	58588	123	67	FDC1126	98313	115	70
E07C05	58588	123	81	FDC1126	98313	115	79
E07C05	58588	123	83	FDC1153M1	76786	F2	
E1-6563	84639	A1		FDC1575M1	98313	120	52
E1-6599-100	84639	A1		FDC1575M1	98313	120	8
E10000	81039	90		FDC1835	98813	120	
E10000-1	81039	90		FDC3835	98313	120	29
E10000-1	81039	KITS		FDC3835	98313	120	31
E10168	81039	90		FDC3835	98313	120	36
E10168	81039	90A		FDC3835	98313	120	37
E10168	81039	KITS		FDC3835	98313	120	39
E10169	81039	90		FDC3835	98313	120	41
E10169	81039	KITS		FDC3835	98313	120	43
E1024		KITS		FDC3835	98313	120	74
E1024	81039	90A	19	FDC3835	98313	120	76
E1024	81039	90A	42	FDC3835	98313	120	81
E11261-1-300	84639	A1		FDC3835	98313	120	82
E1129-85-9	08484	125A	153	FDC3835	98313	120	84
E1356		KITS		FDC3835	98313	120	86
E1356	81039	90A	23	FFIL003	89944	114A	71
E1356M3		KITS		FFIL003	89944	114C	55
E1356M3	81039	90A	22	FFIL007	89944	114A	97
E1471M1		KITS		FFIL007	89944	114B	54
E1597-1	10001	138		FFIL007	89944	114C	47
E1597-1	10001	139		FFIL206	89944	114C	44
E1597-2	10001	138	37	FFIL207	89944	114A	98
E1597-2	10001	139	29	FFIL209	89944	114B	62
E1637M2		KITS		FFIL209	89944	114D	68
E1641		KITS		FFIL212	89944	114D	107
E1641	81039	90A	37	FFIL303	89944	114B	49
E194M3		KITS		FFIL303	89944	114D	56
E194M3	81039	90A	25	FFIL310	89944	114C	35
E201M7		KITS		FFIL311SS8PX	89944	114A	7
E201M7	81039	90A	26	FFIL312	89944	114B	60
E2175M1		KITS		FFIL312	89944	114D	66
E2175M1	81039	90A	12	FFIL314B	89944	114C	33
E2265		KITS		FFIL315SS8PX	89944	114D	
E2300M4	81039	90A	36	FFIL3151-2SS8PX	89944	114B	2
E240-026-175	92830	43	74G	FFIL3151-2SS8PX	89944	114D	2
E2460		KITS		FFIL3161-2SS8PX	89944	114B	3
E2460	81039	90A	11	FFIL3161-2SS8PX	89944	114D	3
E2740M20-1	81039	90A	10	FFIL323B	89944	114C	

REFERENCE NUMBER	MFG CODE	FIG NUMBER	ITEM NUMBER	REFERENCE NUMBER	MFG CODE	FIG NUMBER	ITEM NUMBER
FFIL407	89944	114D	47	G8400A24-24	72914	154	
FFIL409B	89944	114B	35	G8400A8-24	72914	154	
FFIL409B	89944	114D	37	HFL4	73134	45	
FFIL413CSS8PX	89944	114B	9	HF4	84685	104A	3
FFIL413CSS8PX	89944	114D	9	HM807010	60038	20	
FFIL415	89944	114B	45	HPB114100	30028	104	29
FFIL415	89944	114D	51	HPB114100	30028	104	61
FFIL609	89944	114D	77	HPB114100	84685	104A	
FFIL610	89944	114A	99	HPB114101	84685	104A	18
FFIL610	89944	114C	46	HPB114109	84685	104A	6
FFN836	89944	113E	173	HPB114110	84685	104A	17
FFN836T42ST42	89944	113E	205	HPB114111	84685	104A	37
FFN836T42ST42	89944	113E	233	HPB114112	84685	104A	45
FFN836T42ST42	89944	113E	250	HPB114113	84685	104A	26
FFILO08	89944	114B	56	HPB114114		KITS	
FI6-6H	19315	114S	7	HPB114114	84685	104A	27
FI6-6M	19315	114S		HPB114115	84685	104A	41
FNA324	22040	113		HPB114116	84685	104A	40
FNA324	22040	114		HPB114117		KITS	
FORMAGASKET3X1PT	77247	MSUP		HPB114117	84685	104A	24
FR20-31	31435	132		HPB114118	84685	104A	23
FR23-411973	81349	115		HPB114119		KITS	
FR3-4	77896	55	31	HPB114119	84685	104A	21
FR3-4	77896	55	37	HPB114120		KITS	
FR3-5	77896	55	44	HPB114120	84685	104A	22
FR3-5	77896	68	13	HPB114121	84685	104A	43
FS914	81996	158	43	HPB114122		KITS	
FT1000-2	83144	123	8A	HPB114122	84685	104A	4
FT1224-1	83144	176	72	HPB114123	84685	104A	33
FT1224-2	83144	176	67	HPB114124	84685	104A	31
FT968-2	83144	123	5	HPB114126	84685	104A	35
FT969-2	83144	123		HPB114127	84685	104A	29
FX100	66640	E28	1	HPB114128	84685	104A	9
F07C05	58588	123	85	HPB114129		KITS	
F589	12204	58		HPB114129	84685	104A	12
F589	70417	170	38A	HPB114132		KITS	
GA4-250	72794	50	226	HPB114132	84685	104A	13
GA4-250	72794	50	234	HPB114133		KITS	
GB1012		KITS		HPB114133	84685	104A	14
GB10120H	60380	19	21	HPB114134		KITS	
GB1212		KITS		HPB114134	84685	104A	1
GB1212X	60380	13	12	HPB114136		KITS	
GB1212X	60380	13	9	HPB114136	84685	104A	36
GB1212X	60380	14	13	HPB114501	84685	104A	19
GR28	31435	138		HPB114502	84685	104A	39
GR28	31435	139		HPB114503	84685	104A	15
GR28-121		KITS		HPC104114		KITS	
GR28-126		KITS		HPC104114	84685	104A	30
GR28-128		KITS		HR1012	13020	42	
GR28-129		KITS		HR30-1001-24-1A	45402	116	41
GR28-142		KITS		HR30-1001-32-1A	45402	116	
GR28-143		KITS		HR30112	45402	116	
GR28-145		KITS		HR30118	45402	116	
GR28-148		KITS		HR30127	45402	116	
GR28-163		KITS		HR30140	45402	116	
GR28-24		KITS		HR30153	45402	116	
GR28-27		KITS		HR303	13020	106	61
GR28-31		KITS		HR561	13020	16	3
G300-3	31435	11		HSBY5-9DU	81629	128A	91
G300-4B	31435	11		HS15-6	73197	41	
G300-4BT	24446	11		HS15-8	73197	154	
G36A47	58588	123		HS28-6-4	73197	52	6
G606028	64959	114P	33	HS28-6-5	73197	51	3
G606028	64959	114Q	19	HS28-6-9	73197	51	15
G6250-1	72914	128	24	HS38-6-3	73197	154	96
G6250-1	72914	128A		HS38-8-3	73197	154	95
G6528	72914	128A	166	HS52P6-10	73197	41	151
G7740-24	72914	154		HS70-5	73197	BULK	
G7740-8-24	72914	154		HS80A	73197	BULK	
G7740A24	72914	154		H5000C032-072	83014	154	25
G8400-8-24	72914	154		H62-10062-51	78189	203	

REFERENCE NUMBER	MFG CODE	FIG NUMBER	ITEM NUMBER	REFERENCE NUMBER	MFG CODE	FIG NUMBER	ITEM NUMBER
H62-100811-51	78189	201	16	JH12506		KITS	
H6563A	80049	115		JH12506	31435	175D	34
ID453ARN	00781	114		JH12512	31435	175D	53
ID48ARN	36378	114		JH12515	31435	175D	
ID637ARN59	00781	114		JH12517	31435	175D	65
ID637ARN59	00783	114		JH12519	31435	175D	61
ID91ARN6	00781	114		JH12528		KITS	
JB	81349	114		JH12528	31435	175D	44
JH10569-2	31435	175D	9	JH12529	31435	175D	62
JH10569-5	31435	175D	5	JH12538		KITS	
JH11-10	31435	207	29	JH12539	31435	175D	64
JH11437-4	31435	175D	49	JH12545		KITS	
JH11900R3	31435	175		JH12545	31435	175D	41
JH11901	31435	175D		JH12546	31435	175D	48
JH11901	31435	175D	24	JH12549	31435	175D	
JH11902	31435	175D	69	JH12587		KITS	
JH11903	31435	175D	68	JH12588		KITS	
JH11907		KITS		JH12588	31435	175D	55
JH11907	31435	175D	72	JH12643		KITS	
JH11908-5	31435	175D		JH12643	31435	175D	31
JH11912	31435	175D	75	JH12648	31435	175D	
JH11913		KITS		JH12649	31435	175D	67
JH11913	31435	175D	6	JH12653		KITS	
JH11921	31435	175D	11	JH12653	31435	175D	57
JH11922	31435	175D		JH12654		KITS	
JH11922	31435	175D	15	JH12654	31435	175D	56
JH11925	31435	175D	96	JH12655	31435	175D	54
JH11926	31435	175D	97	JH12657		KITS	
JH11927	31435	175D	98	JH12657	31435	175D	32
JH11928	31435	175D		JH12661	31435	175D	28
JH11929	31435	175D	89	JH12665-1	31435	175D	36
JH11930	31435	175D	91	JH12668-1	31435	175D	42
JH11931	31435	175D	88	JH12675L	31435	175D	
JH11932		KITS		JH12680R3	31435	175	
JH11932	31435	175D	92	JH12680R3	31435	175D	
JH11933	31435	175D	95	JH12973	31435	BULK	
JH11941	31435	175D	100	JH13511-4		KITS	
JH11944-3	31435	175D	20	JH13511-4	31435	175D	19
JH11944-5		KITS		JH17102	31435	175D	101
JH11944-5	31435	175D		JH17105	31435	175D	17
JH119443		KITS		JH17121R3	80247	175	
JH11945		KITS		JH17121R3	31435	175D	
JH11945	31435	175D	10	JH17123	31435	175D	
JH11947-1	31435	175D	13	JH17123	31435	175D	16
JH11948	31435	175D	21	JH200-1		KITS	
JH11951		KITS		JH200-1	31435	175D	76
JH11951	31435	175D	12	JH200-5		KITS	
JH11952		KITS		JH203-6		KITS	
JH11952	31435	175D	7	JH203-6	31435	175D	40
JH11953R3	31435	175D	14	JH204-18		KITS	
JH11957	31435	175D	22	JH204-18	31435	175D	90
JH11958	31435	175D	86	JH205-24	31435	175D	81
JH11959	31435	175D	93	JH365-22		KITS	
JH11964	31435	175D	85	JH638-19	31435	175D	52
JH11968		KITS		JH746-11	31435	175D	80
JH11968	31435	175D	82	JH746-8	31435	175D	33
JH11969		KITS		JM150-12A	75165	BULK	
JH11969	31435	175D	78	JV5	91929	58	11
JH11973		KITS		JV5	91929	67	6
JH11973	31435	175D	79	J105WC7C9	92144	E28	
JH11974		KITS		J146-1J	19315	113E	
JH11974	31435	175D	8	J8	81349	113	
JH11975		KITS		KL3BBN	89944	114C	32
JH11975	31435	175D	70	KL3SS4PX	89944	114B	4
JH11977-16	31435	175D	1	KL3SS4PX	89944	114D	4
JH11977-42	31435	175D		KL3SS8PX	89944	114D	
JH11983		KITS		KP10A		KITS	
JH11983	31435	175D	87	KP23BS	21335	93	3
JH11984		KITS		KP23BS	21335	93	42
JH11984	31435	175D	83	KP6A		KITS	
JH11985	31435	175D		KR3BBN	89944	114C	

REFERENCE NUMBER	MFG CODE	FIG NUMBER	ITEM NUMBER	REFERENCE NUMBER	MFG CODE	FIG NUMBER	ITEM NUMBER
KR3SS4PX	89944	114A	9	MC371	76050	175E	2
KR9-1	99057	101	29	MC391	76050	175E	28
KS6A	21335	98	20	MC392	76050	175E	38
KS6A	21335	98	7	MC393	76050	175E	26
KS6A	21335	99	5	MC394	76050	175E	36
KT100	86535	130	23	MC395	76050	175E	37
K130-7	51116	109		MC398	76050	175E	32
K130-9	51116	109	9	MC400	76050	175E	29
K14080B	75361	75		MC402	76050	175E	31
K1480B	75361	74	14	MC409A	76050	175E	
K1480B	75361	75	25	MC409W	76050	175	
K22990	01634	60	10	MC409W	76050	175E	
K46-1	90166	KITS		MC412	76050	175E	34
K46-1	90166	181A		MC501	76050	175E	12
K47-1	90166	KITS		MD1932GN	90484	137	
K47-1	90166	181A		MF9-713-30B2	62983	125A	1
K9200A	75361	78	6	MF9-713-30B2	62983	125B	
LAB659S1	02006	47	12	MILI631TYFCLIFORMUSIZE7AWG	81349	BULK	
LAW114	55719	A1	4	MILL58085	81349	154	10
LCC6	29666	41		MIL17444BTYPE1S1	81349	87	16
LCC6	29666	49		MIL26RW69V5R1	81349	113B	87
LCC6	29666	50		MI6533TYPEG10	81349	113	19
LCC6	29666	51		MK1000-832	75237	41	100
LCC6	29666	52		MOLYKOTETYPEZ	94499	MSUP	
LCC6	29666	53		MR4	77896	169	27
LCC6	29666	154		MR4	77896	169	30
LCC8	29666	50		MR4	77896	169	40
LCC8	29666	51		MR4	77896	169	43
LCC8	29666	52		MS 15795-704	96906	50	93
LCC8	29666	53		MS 35190-256	96906	18	15
LCC8	29666	150		MS 35265-59	96906	17	13
LCR6	29666	49		MS 35265-59	96906	17	7
LL205449	60038	25		MS 9320-12	96906	16	
LL510710	60038	165	55	MSI8775-113	96906	106	137
LL510749	60038	165	54	MSU5795-704	96906	108	
LL510749LL510710	60038	165		MS115-00609-0100	96906	125A	124
L1204	81983	79A	49	MS122026		KITS	
L1204	81983	KITS		MS122028		KITS	
L1204		KITS		MS122029		KITS	
L1560-708-0869	13803	150	79	MS122057	96906	123B	5
L1560-765-7787	13805	50	208	MS122118	96906	106	66
MB1	81349	113		MS122121		KITS	
MCI4046GRADE42	38597	BULK		MS122200	96906	106	142
MCS32003	51600	23		MS124697	96906	103	60
MC192	76050	175E	27	MS134352		KITS	
MC227	76050	175E	1	MS134352	96906	200	44
MC282	76050	175E	45	MS134352	96906	79A	13
MC320	76050	175E	8	MS134361	96906	85B	14
MC324	76050	175E	44	MS15001-1		KITS	
MC328	76050	175E	43	MS15001-1	96906	14	11
MC329	76050	175E	48	MS15001-1	96906	15	8
MC330	76050	175E	42	MS15001-1	96906	16	
MC334	76050	175E	10	MS15001-1	96906	16	34
MC339	76050	175E	47	MS15001-1	96906	16	4
MC343	76050	175E	39	MS15001-1	96906	16	53
MC347	76050	175E	18	MS15001-1	96906	16	7
MC351	76050	175E	41	MS15001-1	96906	19	10
MC351	76050	175E	46	MS15001-1	96906	19	28
MC353	76050	175E	40	MS15001-1	96906	21	20
MC355	76050	175E	21	MS15001-1	96906	21	48
MC360	76050	175E	3	MS15001-1	96906	162	56
MC361	76050	175E	19	MS15001-3		KITS	
MC362	76050	175E	20	MS15001-3	96906	13	
MC363	76050	175E	9	MS15001-4	96906	156	23
MC364	76050	175E	11	MS15002-1		KITS	
MC365	76050	175E	13	MS15002-1		KITS	
MC366	76050	175E	15	MS15002-1	96906	21	49
MC367	76050	175E	17	MS15002-1	96906	38	21
MC368	76050	175E	14	MS15002-1	96906	38	50
MC369	76050	175E	16	MS15002-1	96906	38	63
MC370	76050	175E	7	MS15002-3	96906	16	77

REFERENCE NUMBER	MFG CODE	FIG NUMBER	ITEM NUMBER	REFERENCE NUMBER	MFG CODE	FIG NUMBER	ITEM NUMBER
MS15003-4	96906	20	12	MS16624-1106	96906	BULK	
MS15006-1	96906	184	12	MS16624-1156	96906	185	7
MS150453	96906	17		MS16624-125	96906	104	10
MS150453	96906	103		MS16624-125	96906	104	42
MS150455	96906	188	29	MS16624-125	96906	104	69
MS15616-1	96906	BULK		MS16624-125	96906	104	85
MS15795-315	96906	BULK		MS16624-125	96906	206	69
MS15795-602	96906	114P		MS16624-156	96906	184	
MS15795-704	96906	122		MS16624-28	96906	187	44
MS15795-704	96906	41		MS16624-37		KITS	
MS15795-704	96906	58		MS16624-50	96906	181A	61
MS15795-704	96906	65		MS16625-1050		KITS	
MS15795-704	96906	67		MS16625-1050	96906	KITS	
MS15795-704	96906	67		MS16625-1050	96906	79A	36
MS15795-704	96906	75		MS16625-1081	96906	97	20
MS15795-704	96906	87		MS16625-1112	96906	72	6
MS15795-704	96906	106		MS16625-1125	96906	34	14
MS15795-704	96906	106		MS16625-1125	96906	149	4
MS15795-704	96906	108		MS16625-1137	96906	175A	70
MS15795-704	96906	132		MS16625-1143	96906	21	17
MS15795-704	96906	132		MS16625-1143	96906	34	9
MS15795-704	96906	132		MS16625-1143	96906	149	10
MS15795-704	96906	134		MS16625-1250	96906	34	17
MS15795-704	88044	134		MS16625-1250	96906	149	12
MS15795-704	96906	138		MS16625-4037	96906	BULK	
MS15795-704	96906	139		MS16625-4068	96906	21	28
MS15795-704	96906	139		MS16625-4068	96906	21	57
MS15795-704	96906	139		MS16625-43	96906	113A	62
MS15795-704	96906	44C	13	MS16631-1112	96906	125A	106
MS15795-704	96906	144		MS16633-1006	96906	BULK	
MS15795-804	96906	96	51	MS16633-1006	96906	113E	132
MS15985-8-7	96906	BULK		MS16633-1006	96906	113E	181
MS15985-8R8	96906	48	31	MS16633-1006	96906	113E	185
MS15985D8R9	96906	154	16	MS16633-1006	96906	113E	86
MS1625-38	96906	A3		MS16633-1006	96906	114E	20
MS16535-54	96906	79A		MS16633-1006	96906	114F	15
MS16535-54	96906	81A	52	MS16633-12	96906	106	68
MS16535-64	96906	123B	33	MS16633-12	96906	114P	77
MS16555-25	96906	175D	66	MS16633-12	96906	114Q	56
MS16555-602	96906	BULK		MS16698-14	96906	MSUP	
MS16562-191	96906	57	28	MS16698-18	96906	MSUP	
MS16562-191	96906	58	12	MS16698-21	96906	MSUP	
MS16562-191	96906	96	44	MS16837-100	96906	BULK	
MS16562-191	96906	106	71	MS16837-102	96906	BULK	
MS16562-192	96906	106	128	MS16837-110	96906	BULK	
MS16562-192	96906	106	62	MS16837-112	96906	BULK	
MS16562-193	96906	43	10	MS16837-113	96906	BULK	
MS16562-194	96906	90A	28	MS16837-261	96906	BULK	
MS16562-195	96906	BULK		MS16837-366	96906	BULK	
MS16562-195	96906	175A	51	MS16837-367	96906	BULK	
MS16562-205	96906	54	65	MS16837-379	96906	BULK	
MS16562-218	96906	45	10	MS16837-381	96906	BULK	
MS16562-220	96906	158	92	MS16837-382	96906	BULK	
MS16562-223	96906	25	59	MS16837-383	96906	BULK	
MS16562-223	96906	43	15	MS16837-406	96906	BULK	
MS16562-223	96906	47	10	MS16998-33	96906	175A	89
MS16562-223	96906	47	7	MS171435	96906	125A	81
MS16562-223	96906	58	16	MS171436		KITS	
MS16562-225	96906	12	29	MS171526	96906	43	21
MS16562-225	96906	BULK		MS172203	96906	83A	2
MS16562-227	96906	39	14	MS172211		KITS	
MS16562-234	96906	84	36	MS172211	96906	157	19
MS16562-268	96906	BULK		MS172238	96906	83A	
MS16562-32	96906	BULK		MS172246		KITS	
MS16624-1021	96906	178	35	MS172246	96906	157	18
MS16624-1031	96906	BULK		MS172289	96906	158	70
MS16624-1035	96906	BULK		MS172296	96906	178	30
MS16624-1037	96906	107	79	MS172299		KITS	
MS16624-1098	96906	84	41	MS172346	96906	178	29
MS16624-1100	96906	119	35	MS172349		KITS	
MS16624-1106	96906	158	42	MS17245-1	96906	130	20

REFERENCE NUMBER	MFG CODE	FIG NUMBER	ITEM NUMBER	REFERENCE NUMBER	MFG CODE	FIG NUMBER	ITEM NUMBER
MS17245-1	96906	130	35	MS20073-04-24	96906	37	24
MS17245-1	96906	131	59	MS20073-05-15	96906	157	15
MS17245-1	96906	132	83	MS20073-05-16	96906	157	35
MS17313-1	96906	113	10A	MS20073-05-24	96906	BULK	
MS17313-1	96906	114	39A	MS20073-08-10	96906	BULK	
MS17411-18	96906	BULK		MS20073-08-11	96906	BULK	
MS17983-2	96906	109	6	MS20074-03-03	96906	33	40
MS17985C413	96906	118	137	MS20074-03-03	96906	BULK	
MS17985C413	96906	118	27	MS20074-03-05	96906	37	6
MS17985C413	96906	118	37	MS20074-04-05	96906	21	6
MS17987-609	96906	118	104	MS20074-04-17		KITS	
MS18029-1S15	96906	139	42	MS20074-04-17	96906	175G	10
MS18029-1S3	96906	132	63	MS20074-04-31		KITS	
MS18029-1S3	96906	132	89	MS20074-04-31	96906	79A	1
MS18029-1S7	96906	132	61	MS20074-06-05	96906	BULK	
MS18029-1S7	96906	138	23	MS20200KP5	96906	41	17
MS18029-11S20	96906	BULK		MS20200KP6	96906	93	34
MS18029-153	96906	132	158	MS20200K3L	96906	95	12
MS18029-21	96906	BULK		MS20200K3L	96906	96	12
MS20001P2-7200	96906	BULK		MS20200K3L	96906	106	59
MS20001P3-7200	96906	50		MS20201KP5A	96906	70	20
MS20001P3-7200	96906	BULK		MS20201KP5A	96906	87	119
MS20001P4-7200	96906	BULK		MS20201KP5A	96906	97	21
MS20001P9-7200	96906	BULK		MS20201KP5A	96906	105	58
MS20002-14	96906	36	31	MS20201KP5A	96906	105	62
MS20002-4	96906	91		MS20201KP6A	96906	19	18
MS20002-5	96906	91		MS20201KP6A	96906	21	26
MS20002-7	96906	16		MS20201KP6A	96906	21	29
MS20002-8	96906	176		MS20201KP6A	96906	21	55
MS20002C12	96906	36	28	MS20201KP6A	96906	21	58
MS20002C12	96906	BULK		MS20218-1	96906	55	64
MS20002C14	96906	36	32	MS20218-1	96906	62	17
MS20002C4	96906	17		MS20218-1	96906	62	4
MS20002C4	96906	91		MS20218-1	96906	62	9
MS20002C4	96906	99		MS20218-2	96906	41	13
MS20002C5	96906	91		MS20219-1	96906	60	7
MS20002C5	96906	BULK		MS20219-2	96906	59	5
MS20002C6	96906	26		MS20219-2	96906	60	11
MS20002C6	96906	101	45	MS20219-2	96906	61	12
MS20002C6	96906	183		MS20219-2	96906	61	3
MS20002C7	96906	16		MS20219-2	96906	67	18
MS20002C7	96906	16		MS20219-2	96906	69	2
MS20002C7	96906	16		MS20219-2	96906	108	21
MS20002C7	96906	16	25	MS20219-2	96906	108	28
MS20002C7	96906	16	29	MS20219-2	96906	108	4
MS20002C7	96906	16	75	MS20219-4	96906	56	31
MS20002C7	96906	16	81	MS20219-4	96906	56	67
MS20002C7	96906	16	85	MS20219-4	96906	66	11
MS20002C8	96906	56	76	MS20219A2	96906	56	106
MS20004-10	96906	91	8	MS20219A2	96906	56	24
MS20004-18	96906	BULK		MS20219A2	96906	56	32
MS20004-19	96906	91	6	MS20219A2	96906	56	42
MS20004-34	96906	91		MS20219A2	96906	65	7
MS20004H10	96906	BULK		MS20219A2	96906	66	6
MS20004H14	96906	81	6	MS20219A2	96906	152	11
MS20004H8	96906	17		MS20219A2	96906	169	74
MS20005H15	96906	BULK		MS20230WB20	96906	115	
MS20006-20	96906	26	8	MS20253-2-1487	96906	BULK	
MS20007H10	96906	16	32	MS20257P1-3600	96906	BULK	
MS20007H10	96906	16	63	MS20341-4A	96906	114E	82
MS20012-19	96906	36	26	MS20341-4A	96906	114G	76
MS2004H14	96906	79	6	MS20341-4A	96906	114H	76
MS2004H14	96906	80	6	MS20341-4A	96906	114J	62
MS20066-144	96906	83A		MS20341-416A	96906	113E	207
MS20073-03-04	96906	35A	3	MS20341-416A	96906	123B	13
MS20073-03-04	96906	44A	10	MS20341-416A	96906	123B	6
MS20073-03-04	96906	44B	1				
MS20073-04-05	96906	BULK					
MS20073-04-06	96906	79	76	MS20341-6B	96906	132	114
MS20073-04-07	88044	23	2	MS20341-6B	96906	132	116
MS20073-04-07	96906	23	3	MS20341-6B	96906	132	118

REFERENCE NUMBER	MFG CODE	FIG NUMBER	ITEM NUMBER	REFERENCE NUMBER	MFG CODE	FIG NUMBER	ITEM NUMBER
MS20341-6B	96906	132	120	MS20364-624A	96906	165	
MS20341-616	96906	131		MS20364-624A	96906	207	3
MS20341-616	96906	175A	102	MS20364-632			
MS20364-1032		KITS					
		KITS					
			97				
		1		MS20364-720		KITS	
				MS20364-820		KITS	
MS20364-1614A	96906	84	34	MS20364-820C	96906	38	
MS20364-428A	96906	24		MS20364-820C	96906	84	26
MS20364-428A	96906	26		MS20364-832C	96906	180	
MS20364-428A	96906	41		MS20364-836		KITS	
MS20364-428A	96906	43		MS20364-918A	96906	162	
MS20364-428A	96906	55					
MS20364-428A	96906	56					
MS20364-428A	96906	56	73	MS20364D428A	96906	129	
MS20364-428A	96906	60		MS20364D428A	96906	212A	2
MS20364-428A	96906	62		MS20364D632A	96906	57	
MS20364-428A	96906	65		MS20364D632A	96906	131	
MS20364-428A	96906	66		MS20364D632A	96906	132	
MS20364-428A	96906	67					
MS20364-428A	96906	70		MS20365-1032		KITS	
MS20364-428A	96906	71		MS20365-1032C		KITS	
MS20364-428A	96906	72		MS20365-428		KITS	
MS20364-428A	96906	79		MS20365-428		KITS	
MS20364-428A	96906	79		MS20365-428C		KITS	
MS20364-428A	96906	79		MS20365-440		KITS	
MS20364-428A	96906	80		MS20365-524		KITS	
MS20364-428A	96906	80		MS20365-524C		KITS	
MS20364-428A	96906	80		MS20365-524C		KITS	
MS20364-428A	96906	81		MS20365-624		KITS	
MS20364-428A	96906	81		MS20365-624C		KITS	
MS20364-428A	96906	81		MS20365-720C		KITS	
MS20364-428A	96906	82		MS20365-832		KITS	
MS20364-428A	96906	84		MS20365-832		KITS	
MS20364-428A	96906	87		MS20365-918C		KITS	
MS20364-428A	96906	91		MS20365D1032		KITS	
MS20364-428A	96906	93					
MS20364-428A	96906	97					
MS20364-428A	96906	97	15	MS20365D428		KITS	
MS20364-428A	96906	105		MS20365D428		KITS	
MS20364-428A	96906	108		MS20365D820A	96906	56	
MS20364-428A	96906	119		MS20392-1C15	96906	140	11
MS20364-428A	96906	125		MS20392-1C15	96906	141	15
MS20364-428A	96906	125		MS20392-1C19	96906	108	18
MS20364-428A	96906	151		MS20392-1C19	96906	108	19
MS20364-428A	96906	153		MS20392-1C19	96906	108	2
MS20364-428A	96906	155		MS20392-1C19	96906	108	20
MS20364-428A	96906	156	3	MS20392-1C19	96906	108	26
MS20364-428A	96906	157	1	MS20392-1C19	96906	108	27
MS20364-428A	96906	159		MS20392-1C21	96906	152	5
MS20364-428A	96906	172	23	MS20392-1C21	96906	153	1
MS20364-428A	96906	172	68	MS20392-1C25	96906	BULK	
MS20364-428A	96906	176		MS20392-1C29	96906	105	49
MS20364-428A	96906	125A	98	MS20392-1C33	96906	105	48
MS20364-428C		KITS		MS20392-1C33	96906	108	3
				MS20392-1C55	96906	65	6
				MS20392-1C57	96906	BULK	
MS20364-624		KITS		MS20392-1C59	96906	105	47
MS20364-624		KITS		MS20392-2C11	96906	140	9
MS20364-624A		KITS		MS20392-2C11	96906	141	13
MS20364-624A	96906	11		MS20392-2C13	96906	47	2
MS20364-624A	96906	28	1	MS20392-2C13	96906	108	37
MS20364-624A	96906	87		MS20392-2C17	96906	150	40
MS20364-624A	96906	93		MS20392-2C19	96906	152	7
MS20364-624A	96906	110	12	MS20392-2C19	96906	173	41
MS20364-624A	96906	125		MS20392-2C19	96906	BULK	

REFERENCE NUMBER	MFG CODE	FIG NUMBER	ITEM NUMBER	REFERENCE NUMBER	MFG CODE	FIG NUMBER	ITEM NUMBER
MS20392-2C23	96906	39	18	MS20426B4	96906	154	93
MS20392-2C33	96906	35A	24	MS20426B4-24	96906	BULK	
MS20392-2C35	96906	BULK		MS20426B4-4	96906	BULK	
MS20392-2C41	96906	117	94	MS20426B4-8	96906	BULK	
MS20392-2C55	96906	41	68	MS20426B5	96906	52	16
MS20392-2C7	96906	39	10	MS20426B5-12	96906	BULK	
MS20392-2C7	96906	108	1	MS20426B5-4	96906	BULK	
MS20392-2C7	96906	152	10	MS20426B5-6	96906	BULK	
MS20392-2C7	96906	172	25	MS20426B6	96906	127	10
MS20392-2C7	96906	172	31	MS20426B6-12	96906	BULK	
MS20392-2C7	96906	172	70	MS20426B6-24	96906	BULK	
MS20392-2C7	96906	172	76	MS20426B6-6	96906	BULK	
MS20392-2C83	96906	69	6	MS20426DD6-6	96906	BULK	
MS20392-2C9	96906	43	25	MS20426DD6-7	96906	BULK	
MS20392-2C9	96906	43	6	MS20426D3	96906	131	52
MS20392-2C9	96906	43	8	MS20427-6	96906	107	100
MS20392-2C9	96906	45	15	MS20427M4-4	96906	BULK	
MS20392-2C9	96906	87	54	MS20427M4-6	96906	BULK	
MS20392-2C9	96906	87	58	MS20427M4-8	96906	BULK	
MS20392-2C95	96906	61	11	MS20427M6-6	96906	BULK	
MS20392-3C11	96906	BULK		MS20435F3	96906	176	53
MS20392-3C25	96906	172	2	MS20435M5	96906	61	24
MS20392-3C25	96906	172	40	MS20450C8B5	96906	114E	4
MS20392-3C25	96906	172	65	MS20461-4-3	96906	37	8
MS20392-3C35	96906	15	5	MS20470AD2-10	96906	178	48
MS20392-3C37	96906	87	53	MS20470AD3	96906	54	72
MS20392-3C37	96906	BULK		MS20470AD3	96906	96	36
MS20392-3C61	96906	41	67	MS20470AD3	96906	129	35
MS20392-4C11	96906	45		MS20470AD3	96906	131	23
MS20392-4C11	96906	BULK		MS20470AD3	96906	132	3
MS20392-4C19	96906	BULK		MS20470AD3	96906	150	17
MS20392-4C51	96906	BULK		MS20470AD3	96906	173	46
MS20426AD	96906	52	39	MS20470AD3	96906	176	51
MS20426AD2-3	96906	BULK		MS20470AD3	96906	176	56
MS20426AD3	96906	51	10	MS20470AD3-4	96906	50	103
MS20426AD3	96906	130	88	MS20470AD3-4	96906	50	140
MS20426AD3	96906	130	91	MS20470AD3-8	96906	39	16
MS20426AD3	96906	150	123	MS20470AD3-8	96906	BULK	
MS20426AD3	96906	170	24	MS20470AD4	96906	41	12
MS20426AD3-4	96906	BULK		MS20470AD4	96906	41	14
MS20426AD3-5	96906	37	18	MS20470AD4	96906	41	152
MS20426AD4	96906	53	16	MS20470AD4	96906	41	21
MS20426AD4	96906	150	52	MS20470AD4	96906	41	23
MS20426AD4	96906	169	85	MS20470AD4	96906	41	78
MS20426AD4	96906	169	89	MS20470AD4	96906	45	18
MS20426AD4-5	96906	BULK		MS20470AD4	96906	45	20
MS20426AD4-6	96906	178	18	MS20470AD4	96906	45	38
MS20426AD4-6	96906	BULK		MS20470AD4	96906	48	8
MS20426AD5	96906	51	26	MS20470AD4	96906	50	302
MS20426AD5	96906	52	11	MS20470AD4	96906	50	321
MS20426AD5	96906	52	19	MS20470AD4	96906	50	323
MS20426AD5-8	96906	BULK		MS20470AD4	96906	50	326
MS20426AD6	96906	51	12	MS20470AD4	96906	50	345
MS20426AD6	96906	51	20	MS20470AD4	96906	50	62
MS20426AD6	96906	52	23	MS20470AD4	96906	51	7
MS20426AD6	96906	52	41	MS20470AD4	96906	55	65
MS20426AD6-6	96906	BULK		MS20470AD4	96906	57	6
MS20426AD6-9	96906	49		MS20470AD4	96906	61	19
MS20426AD8-22	96906	BULK		MS20470AD4	96906	61	21
MS20426AD8-32	96906	BULK		MS20470AD4	96906	61	25
MS20426B24	96906	BULK		MS20470AD4	96906	62	10
MS20426B3	96906	46	116	MS20470AD4	96906	62	25
MS20426B3	96906	48	23	MS20470AD4	96906	62	5
MS20426B3	96906	154	20	MS20470AD4	96906	65	11
MS20426B3-5	96906	BULK		MS20470AD4	96906	66	15
MS20426B3-6	96906	BULK		MS20470AD4	96906	69	20
MS20426B3-9	96906	43		MS20470AD4	96906	74	43
MS20426B4	96906	77		MS20470AD4	96906	74	46
MS20426B4	96906	150	63	MS20470AD4	96906	74	54
MS20426B4	96906	150	66	MS20470AD4	96906	84	47
MS20426B4	96906	154	92	MS20470AD4	96906	106	23

REFERENCE NUMBER	MFG CODE	FIG NUMBER	ITEM NUMBER	REFERENCE NUMBER	MFG CODE	FIG NUMBER	ITEM NUMBER
MS20470AD4	96906	109	23	MS20470AD6	96906	172	38
MS20470AD4	96906	109	25	MS20470A2-8		KITS	
MS20470AD4	96906	109	26	MS20470A4	96906	75	67
MS20470AD4	96906	113	35	MS20470A4-20	96906	192	27
MS20470AD4	96906	113	37	MS20470A4-20	96906	193	26
MS20470AD4	96906	113	39	MS20470A4-20	96906	194	5
MS20470AD4	96906	113	41	MS20470A4-20	96906	195	11
MS20470AD4	96906	114	55	MS20470A4-20	96906	195	7
MS20470AD4	96906	114	57	MS20470A4-20	96906	196	5
MS20470AD4	96906	114	59	MS20470A4-20	96906	197	5
MS20470AD4	96906	114	61	MS20470B3	96906	129	39
MS20470AD4	96906	114	63	MS20470B3	96906	129	41
MS20470AD4	96906	115	24	MS20470B3	96906	129	7
MS20470AD4	96906	115	27	MS20470B3	96906	145	12
MS20470AD4	96906	115	29	MS20470B3	96906	154	26
MS20470AD4	96906	122	13	MS20470B3-3	96906	BULK	
MS20470AD4	96906	122	44	MS20470B3-4	96906	154	164
MS20470AD4	96906	122	51	MS20470B4	96906	49	38
MS20470AD4	96906	123	102	MS20470B4	96906	77	
MS20470AD4	96906	123	108	MS20470B4	96906	114	50
MS20470AD4	96906	123	110	MS20470B4	96906	130	81
MS20470AD4	96906	123	112	MS20470B4	96906	145	15
MS20470AD4	96906	123	36	MS20470B4	96906	150	107
MS20470AD4	96906	130		MS20470B4	96906	150	114
MS20470AD4	96906	130	86	MS20470B4	96906	150	19
MS20470AD4	96906	131	90	MS20470B4	96906	150	26
MS20470AD4	96906	132	10	MS20470B4	96906	150	32
MS20470AD4	96906	132	149	MS20470B4	96906	150	36
MS20470AD4	96906	132	153	MS20470B4	96906	150	42
MS20470AD4	96906	139	27	MS20470B4	96906	150	44
MS20470AD4	96906	141	34	MS20470B4	96906	150	47
MS20470AD4	96906	141	36	MS20470B4	96906	150	60
MS20470AD4	96906	141	37	MS20470B4	96906	150	62
MS20470AD4	96906	150	116	MS20470B4	96906	150	65
MS20470AD4	96906	150	119	MS20470B4	96906	150	68
MS20470AD4	96906	150	121	MS20470B4	96906	150	70
MS20470AD4	96906	154		MS20470B4	96906	150	76
MS20470AD4	96906	154	50	MS20470B4	96906	150	86
MS20470AD4	96906	160	38	MS20470B4	96906	154	206
MS20470AD4	96906	169	16	MS20470B4	96906	154	212
MS20470AD4	96906	169	87	MS20470B4	96906	154	22
MS20470AD4	96906	169	88	MS20470B4	96906	154	222
MS20470AD4	96906	170		MS20470B4	96906	154	224
MS20470AD4	96906	170	37	MS20470B4	96906	154	39
MS20470AD4	96906	172	48	MS20470B4	96906	160	
MS20470AD4	96906	172	54	MS20470B4	96906	160	17
MS20470AD4	96906	172	88	MS20470B4	96906	160	21
MS20470AD5	96906	51	16	MS20470B4-12	96906	BULK	
MS20470AD5	96906	51	19	MS20470B4-6	96906	BULK	
MS20470AD5	96906	51	24	MS20470B4-7	96906	BULK	
MS20470AD5	96906	52	24	MS20470B4-9	96906	BULK	
MS20470AD5	96906	52	44	MS20470B5	96906	52	15
MS20470AD5	96906	52	48	MS20470B5	96906	52	18
MS20470AD5	96906	53		MS20470B5	96906	52	28
MS20470AD5	96906	53	12	MS20470B5	96906	52	34
MS20470AD5	96906	53	18	MS20470B5	96906	150	13
MS20470AD5	96906	53	6	MS20470B5	96906	150	30
MS20470AD5	96906	87	158	MS20470B5	96906	150	35
MS20470AD5	96906	145	56	MS20470B5	96906	150	45
MS20470AD5	96906	150	104	MS20470B5	96906	150	48
MS20470AD5	96906	150	96	MS20470B5	96906	150	50
MS20470AD5	96906	150	99	MS20470B5	96906	150	72
MS20470AD5	96906	154		MS20470B5	96906	150	74
MS20470AD5	96906	160		MS20470B5	96906	150	78
MS20470AD5-7	96906	150		MS20470B5	96906	150	80
MS20470AD6	96906	49		MS20470B5	96906	150	82
MS20470AD6	96906	51	13	MS20470B5	96906	150	84
MS20470AD6	96906	52	42	MS20470B5	96906	150	89
MS20470AD6	96906	53	17	MS20470B5	96906	150	92
MS20470AD6	96906	150	100	MS20470B5	96906	154	24
MS20470AD6	96906	150	105	MS20470B5-12	96906	154	

REFERENCE NUMBER	MFG CODE	FIG NUMBER	ITEM NUMBER	REFERENCE NUMBER	MFG CODE	FIG NUMBER	ITEM NUMBER
MS20470B5-12	96906	BULK		MS20613-4P5	96906	191	16
MS20470B5-22	96906	BULK		MS20613-4P5	96906	191	29
MS20470B5-4	96906	BULK		MS20613-4P5	96906	195	14
MS20470B5-5	96906	BULK		MS20613-4P5	96906	BULK	
MS20470B5-6	96906	154		MS20613-4P6	96906	192	11
MS20470B5-6	96906	BULK		MS20613-4P6	96906	192	16
MS20470B5-7	96906	BULK		MS20613-4P6	96906	192	19
MS20470B5-8	96906	BULK		MS20613-4P6	96906	193	15
MS20470B6	96906	52	3	MS20613-4P6	96906	193	18
MS20470B6	96906	53	3	MS20613-5P20	96906	42	9
MS20470B6	96906	150	22	MS20613-6P12	96906	102	12
MS20470B6-24	96906	154		MS20613-6P12	96906	BULK	
MS20470B6-4	96906	BULK		MS20615-5M14	96906	48	6
MS20470B6-7	96906	154		MS20615-5M7	96906	BULK	
MS20470DD2-8	96906	33	42	MS20615-6M8	96906	BULK	
MS20470DD2-8	96906	141	19	MS20659-1	96906	KITS	
MS20470DD6-5	96906	BULK		MS20659-1		KITS	
MS20470DD6-6	96906	BULK		MS20659-3		KITS	
MS20470DD6-7	96906	BULK		MS20659-3	96906	KITS	
MS20470DD6-8	96906	BULK		MS20667-2	96906	108	34
MS20500-428	96906	BULK		MS20760D12	96906	75	22
MS20500-524	96906	BULK		MS20760D24	96906	BULK	
MS2060AD4W4	96906	172	98	MS20762D20	96906	74	9
MS2060DAD4WZ	96906	128		MS20762D20	96906	75	15
MS20600AD4W1	96906	BULK		MS20762D20	96906	75	18
MS20600AD4W5	96906	BULK		MS20762D20-24	96906	79	78
MS20600AD4W6	96906	BULK		MS20762D24	96906	76	60
MS20600AD5W2	96906	BULK		MS20819-10D	96906	50	148
MS20600AD5W3	96906	BULK		MS20819-10D	96906	50	152
MS20600AD5W5	96906	BULK		MS20819-10D	96906	145	111
MS20600AD5W6	96906	BULK		MS20819-10D	96906	145	115
MS20600AD6W3	96906	BULK		MS20819-10D	96906	145	51
MS20600AD6W4	96906	BULK		MS20819-10D	96906	146	34
MS20600AD6W5	96906	BULK		MS20819-12D	96906	79	114
MS20600AD6W6	96906	BULK		MS20819-12D	96906	79	61
MS20600AD6W9	96906	BULK		MS20819-12D	96906	79	67
MS20600B4W2	96906	BULK		MS20819-12D	96906	80	93
MS20600B4W3	96906	BULK		MS20819-12D	96906	81	76
MS20600B5W4	96906	BULK		MS20819-12D	96906	BULK	
MS20600B6W2	96906	BULK		MS20819-4	96906	54	18
MS20601AD4W2	96906	38	40	MS20819-4	96906	54	38
MS20601AD4W3	96906	BULK		MS20819-4	96906	54	43
MS20601AD4W4	96906	BULK		MS20819-4	96906	110	24
MS20601AD4W5	96906	BULK		MS20819-4	96906	111	32
MS20601AD5W2	96906	BULK		MS20819-4	96906	111	36
MS20601AD5W3	96906	BULK		MS20819-4	96906	181	3
MS20601AD5W4	96906	BULK		MS20819-4	96906	BULK	
MS20601AD5W5	96906	BULK		MS20819-4C	96906	110	11
MS20601AD6W2	96906	BULK		MS20819-4C	96906	110	16
MS20601AD6W3	96906	107	20	MS20819-4C	96906	110	20
MS20601AD6W4	96906	BULK		MS20819-4C	96906	110	28
MS20601AD6W5	96906	BULK		MS20819-4C	96906	110	3
MS20601B5W2	96906	BULK		MS20819-4C	96906	110	32
MS20613-3C3	96906	BULK		MS20819-4C	96906	110	36
MS20613-4C10	96906	BULK		MS20819-4C	96906	110	40
MS20613-4P4	96906	191	10	MS20819-4C	96906	110	44
MS20613-4P4	96906	191	13	MS20819-4C	96906	110	48
MS20613-4P4	96906	191	18	MS20819-4C	96906	110	53
MS20613-4P4	96906	191	20	MS20819-4C	96906	110	65
MS20613-4P4	96906	191	32	MS20819-4C	96906	110	69
MS20613-4P4	96906	191	34	MS20819-4C	96906	111	11
MS20613-4P4	96906	191	36	MS20819-4C	96906	111	79
MS20613-4P4	96906	192	5	MS20819-4C	96906	BULK	
MS20613-4P4	96906	192	9	MS20819-4C	96906	114S	20
MS20613-4P4	96906	193	10	MS20819-4D	96906	32	122
MS20613-4P4	96906	193	7	MS20819-4D	96906	32	136
MS20613-4P4	96906	195	6	MS20819-4D	96906	32	141
MS20613-4P4	96906	196	8	MS20819-4D	96906	54	29
MS20613-4P4	96906	197	8	MS20819-4D	96906	54	34
MS20613-4P4	96906	BULK		MS20819-4D	96906	54	4
MS20613-4P5	96906	191	11	MS20819-4D	96906	54	9

REFERENCE NUMBER	MFG CODE	FIG NUMBER	ITEM NUMBER	REFERENCE NUMBER	MFG CODE	FIG NUMBER	ITEM NUMBER
MS20819-4D	96906	110	7	MS20819-8D	96906	145	145
MS20819-4D	96906	110	77	MS20819-8D	96906	145	150
MS20819-4D	96906	111		MS20819-8D	96906	145	162
MS20819-4D	96906	111	19	MS20819-8D	96906	145	167
MS20819-4D	96906	111	28	MS20819-8D	96906	145	36
MS20819-4D	96906	111	3	MS20819-8D	96906	145	95
MS20819-4D	96906	111	40	MS20819-8D	96906	145	99
MS20819-4D	96906	111	44	MS20819-8D	96906	146	14
MS20819-4D	96906	111	48	MS20819-8D	96906	146	18
MS20819-4D	96906	111	52	MS20819-8D	96906	146	22
MS20819-4D	96906	111	56	MS20819-8D	96906	148	16
MS20819-4D	96906	111	60	MS20819-8D	96906	BULK	
MS20819-4D	96906	111	65	MS20822-12D	96906	84	12
MS20819-4D	96906	111	7	MS20822-4	96906	175	
MS20819-4D	96906	111	70	MS20822-4B	96906	215	7
MS20819-4D	96906	111	75	MS20822-6	96906	123	
MS20819-4D	88044	111	83	MS20822-6	96906	BULK	
MS20819-4D	96906	111	87	MS20822-8D	96906	BULK	
MS20819-4D	96906	122	27	MS20823-4D	96906	74	71
MS20819-4D	96906	124	20	MS20823-4D	96906	75	87
MS20819-4D	96906	124	74	MS20826-4D	96906	BULK	
MS20819-4D	96906	144	102	MS20913-1	96906	KITS	
MS20819-4D	96906	144	33	MS20913-1		KITS	
MS20819-4D	96906	144	47	MS20913-1	96906	76B	24
MS20819-4D	96906	144	55	MS20913-1	96906	175B	38
MS20819-4D	96906	144	88	MS20913-1	96906	175C	47
MS20819-4D	96906	145	105	MS20913-1	96906	175E	24
MS20819-4D	96906	145	120	MS20913-1	96906	175F	15
MS20819-4D	96906	145	125	MS20913-1	96906	175G	7
MS20819-4D	96906	145	130	MS20913-1	96906	212A	60
MS20819-4D	96906	145	135	MS20913-1	96906	214A	175
MS20819-4D	96906	145	31	MS20913-1	96906	214A	177
MS20819-4D	96906	145	41	MS20913-1	96906	214A	198
MS20819-4D	96906	145	69	MS20913-1	96906	214A	199
MS20819-4D	96906	145	73	MS20913-1	96906	214A	201
MS20819-4D	96906	145	77	MS20913-1	96906	214A	238
MS20819-4D	96906	145	81	MS20913-1	96906	214A	353
MS20819-4D	96906	145	85	MS20913-1	96906	214A	354
MS20819-4D	96906	145	90	MS20913-1	96906	214A	355
MS20819-4D	96906	148	25	MS20913-1	96906	214A	356
MS20819-4D	96906	162	11	MS20913-1	96906	214A	453
MS20819-4D	96906	162	68	MS20913-1	96906	214A	480
MS20819-4D	96906	162	72	MS20913-1	96906	214A	481
MS20819-4D	96906	173	17	MS20913-1	96906	214A	482
MS20819-4D	96906	BULK		MS20913-1	96906	214A	483
MS20819-5D	96906	BULK		MS20913-1	96906	214A	496
MS20819-6	96906	145	60	MS20913-1	96906	214A	497
MS20819-6	96906	BULK		MS20913-1	96906	214A	85
MS20819-6D	96906	77	6	MS20913-1	96906	214A	86
MS20819-6D	96906	123	53	MS20913-1	96906	214A	87
MS20819-6D	96906	145	46	MS20913-1	96906	214A	88
MS20819-6D	96906	145	64	MS20913-2	96906	214A	90
MS20819-6D	96906	146	26	MS20913-2	96906	214A	91
MS20819-6D	96906	146	30	MS20913-4	96906	214A	89
MS20819-6D	96906	147	11	MS20913-6	96906	184	16
MS20819-6D	96906	147	3	MS20913-6D	96906	200	18
MS20819-6D	96906	147	7	MS21D44006	96906	130	
MS20819-6D	96906	148	4	MS21025-24	96906	165	31
MS20819-6D	96906	148	9	MS21025-39	96906	162	39
MS20819-6D	96906	BULK		MS21040-7	96906	16	
MS20819-8D	96906	32	68	MS21040-7	96906	122	
MS20819-8D	96906	32	73	MS21040-7	96906	123	
MS20819-8D	96906	32	90	MS21040-7	96906	162	
MS20819-8D	96906	35	3	MS21040-7	96906	162	
MS20819-8D	96906	35	9	MS21040-7	96906	163	
MS20819-8D	96906	110	58	MS21042-08	96906	41	
MS20819-8D	96906	144	136	MS21042-08	96906	45	
MS20819-8D	96906	144	20	MS21042-08	96906	48	
MS20819-8D	96906	144	62	MS21042-08	96906	57	
MS20819-8D	96906	144	67	MS21042-08	96906	70	
MS20819-8D	96906	145	140	MS21042-08	96906	102	

REFERENCE NUMBER	MFG CODE	FIG NUMBER	ITEM NUMBER	REFERENCE NUMBER	MFG CODE	FIG NUMBER	ITEM NUMBER
MS21042-08	96906	123		MS21044D3	96906	52	
MS21042-08	96906	138		MS21044D3	96906	56	
MS21042-08	96906	139		MS21044D3	96906	82	
MS21042-08	96906	123B	39	MS21044D3	96906	85	
MS21042-3	96906	11D	28	MS21044D3	96906	109	
MS21042-3	96906	43		MS21044D3	96906	115	
MS21042-3	96906	50		MS21044D3	96906	118	
MS21042-3	96906	57		MS21044D3	96906	120	
MS21042-3	96906	59		MS21044D3	96906	120	
MS21042-3	96906	61		MS21044D3	96906	120	
MS21042-3	96906	62		MS21044D3	96906	132	
MS21042-3	96906	70		MS21044D3	96906	132	
MS21042-3	96906	71		MS21044D3	96906	132	
MS21042-3	96906	72		MS21044D3	96906	150	
MS21042-3	96906	73		MS21044D3	96906	172	
MS21042-3	96906	79		MS21044D3	96906	179	
MS21042-3	96906	81		MS21044D3	96906	180	
MS21042-3	96906	83		MS21044D3	96906	BULK	
MS21042-3	96906	84		MS21044D3	96906	214A	180
MS21042-3	96906	88		MS21044D3	96906	214A	207
MS21042-3	96906	91		MS21044D3	96906	214A	236
MS21042-3	96906	97		MS21044D3	96906	214A	380
MS21042-3	96906	101		MS21044D3	96906	214A	382
MS21042-3	96906	105		MS21044D3	96906	214A	40
MS21042-3	96906	119		MS21044D4	96906	19	1
MS21042-3	96906	119	12	MS21044D4	96906	41	
MS21042-3	96906	119	13	MS21044D4	96906	48	
MS21042-3	96906	132		MS21044D4	96906	214A	384
MS21042-3	96906	137		MS21044D4	96906	214A	386
MS21042-3	96906	138		MS21044D4	96906	214A	50
MS21042-3	96906	138		MS21044D4	96906	214A	54
MS21042-3	96906	138		MS21044D4	96906	214A	56
MS21042-3	96906	139		MS21044D4	96906	214A	58
MS21042-3	96906	170		MS21044D4	96906	214A	60
MS21042-3	96906	170		MS21044D5	96906	214A	44
MS21042-3	96906	170		MS21044D5	96906	214A	47
MS21042-3	96906	172		MS21044D6	96906	84	
MS21042-3	96906	173		MS21044D6	96906	132	
MS21042-3	96906	173		MS21044D6	96906	85B	36
MS21042-3	96906	79A	26	MS21044E04	96906	114G	75
MS21042-3	96906	79B	5	MS21044E04	96906	114H	75
MS21042-3	96906	81A	11	MS21044E04	96906	114J	61
MS21042-3	96906	123A	46	MS21044E08	96906	123B	2
MS21042-3	96906	125A	95	MS21044E3	96906	BULK	
MS21042-3	96906	175A	38	MS21044LD3	96906	172	
MS21042-4		KITS		MS21044N04	96906	67	
MS21042-4	96906	79		MS21044N04	96906	67	
MS21042-4	96906	178	32	MS21044N04	96906	75	
MS21042-4	96906	178	60	MS21044N04	96906	96	50
MS21042-4	96906	BULK		MS21044N04	96906	128	
MS21042-8	96906	58		MS21044N04	96906	128	
MS21044B3	96906	BULK		MS21044N04	96906	128	
MS21044C6	96906	200	2	MS21044N04	96906	129	
MS21044D04	96906	58		MS21044N04	96906	131	
MS21044D04	96906	109		MS21044N04	96906	131	
MS21044D04	96906	113		MS21044N04	96906	131	
MS21044D04	96906	114		MS21044N04	96906	131	
MS21044D06	96906	50		MS21044N04	96906	131	
MS21044D06	96906	130		MS21044N04	96906	131	
MS21044D08	96906	43		MS21044N04	96906	131	
MS21044D08	96906	45		MS21044N04	96906	131	
MS21044D08	96906	46		MS21044N04	96906	132	
MS21044D08	96906	132		MS21044N04	96906	132	
MS21044D08	96906	139		MS21044N04	96906	132	
MS21044D08	96906	152		MS21044N04	96906	132	
MS21044D08	96906	170		MS21044N04	96906	132	
MS21044D08	96906	170		MS21044N04	96906	132	
MS21044D3	96906	41		MS21044N04	96906	132	
MS21044D3	96906	46		MS21044N04	96906	132	
MS21044D3	96906	48		MS21044N04	96906	132	
MS21044D3	96906	50		MS21044N04	96906	138	

REFERENCE NUMBER	MFG CODE	FIG NUMBER	ITEM NUMBER	REFERENCE NUMBER	MFG CODE	FIG NUMBER	ITEM NUMBER
MS21044N04	96906	139		MS21044N3	96906	50	
MS21044N04	96906	139		MS21044N3	96906	50	34
MS21044N04	96906	150		MS21044N3	96906	51	
MS21044N04	96906	128A	103	MS21044N3	96906	52	
MS21044N06	96906	104		MS21044N3	96906	52	
MS21044N06	96906	128		MS21044N3	96906	52	
MS21044N06	96906	130		MS21044N3	96906	53	
MS21044N06	96906	131		MS21044N3	96906	54	
MS21044N06	96906	131		MS21044N3	96906	54	
MS21044N06	96906	131		MS21044N3	96906	54	
MS21044N06	96906	132		MS21044N3	96906	56	
MS21044N06	96906	138		MS21044N3	96906	60	
MS21044N06	96906	139		MS21044N3	96906	63	
MS21044N06	96906	162		MS21044N3	96906	64	
MS21044N06	96906	125A	70	MS21044N3	96906	67	
MS21044N06	96906	125A	74	MS21044N3	96906	67	
MS21044N06	96906	128A	67	MS21044N3	96906	69	
MS21044N08		KITS		MS21044N3	96906	73	
MS21044N08	96906	12		MS21044N3	96906	74	
MS21044N08	96906	41		MS21044N3	96906	75	
MS21044N08	96906	42		MS21044N3	96906	75	
MS21044N08	96906	46		MS21044N3	96906	75	
MS21044N08	96906	50		MS21044N3	96906	77	
MS21044N08	96906	75		MS21044N3	96906	78	
MS21044N08	96906	94		MS21044N3	96906	82	
MS21044N08	96906	94		MS21044N3	96906	85	
MS21044N08	96906	94	6	MS21044N3	96906	87	
MS21044N08	96906	100		MS21044N3	96906	88	
MS21044N08	96906	101		MS21044N3	96906	89	
MS21044N08	96906	104		MS21044N3	96906	90	
MS21044N08	96906	108		MS21044N3	96906	96	
MS21044N08	96906	11D	58	MS21044N3	96906	100	
MS21044N08	96906	115		MS21044N3	96906	101	
MS21044N08	96906	115		MS21044N3	96906	102	
MS21044N08	96906	115		MS21044N3	96906	104	
MS21044N08	96906	118		MS21044N3	96906	106	
MS21044N08	96906	122		MS21044N3	96906	106	
MS21044N08	96906	130		MS21044N3	96906	106	
MS21044N08	96906	131		MS21044N3	96906	106	
MS21044N08	96906	132		MS21044N3	96906	107	
MS21044N08	96906	133		MS21044N3	96906	108	
MS21044N08	96906	140		MS21044N3	96906	115	
MS21044N08	96906	146		MS21044N3	96906	116	
MS21044N08	96906	153		MS21044N3	96906	116	
MS21044N08	96906	154		MS21044N3	96906	117	
MS21044N08	96906	192	25	MS21044N3	96906	117	
MS21044N08	96906	193	24	MS21044N3	96906	118	
MS21044N08	96906	175D	59	MS21044N3	96906	118	
MS21044N12		KITS		MS21044N3	96906	118	
MS21044N3	96906	11		MS21044N3	96906	118	
MS21044N3	96906	11		MS21044N3	96906	118	
MS21044N3	96906	11		MS21044N3	96906	118	
MS21044N3	96906	25	17	MS21044N3	96906	120	
MS21044N3	96906	25	2	MS21044N3	96906	122	
MS21044N3	96906	25	4	MS21044N3	96906	122	
MS21044N3	96906	32		MS21044N3	96906	122	
MS21044N3	96906	33		MS21044N3	96906	123	
MS21044N3	96906	33		MS21044N3	96906	123	
MS21044N3	96906	33		MS21044N3	96906	123	
MS21044N3	96906	34		MS21044N3	96906	123	
MS21044N3	96906	35		MS21044N3	96906	123	
MS21044N3	96906	39		MS21044N3	96906	124	
MS21044N3	96906	41		MS21044N3	96906	124	
MS21044N3	96906	41		MS21044N3	96906	125	
MS21044N3	96906	42		MS21044N3	96906	130	
MS21044N3	96906	44		MS21044N3	96906	138	
MS21044N3	96906	45		MS21044N3	96906	140	
MS21044N3	96906	46		MS21044N3	96906	144	
MS21044N3	96906	48		MS21044N3	96906	145	
MS21044N3	96906	50		MS21044N3	96906	147	
MS21044N3	96906	50		MS21044N3	96906	148	

REFERENCE NUMBER	MFG CODE	FIG NUMBER	ITEM NUMBER	REFERENCE NUMBER	MFG CODE	FIG NUMBER	ITEM NUMBER
MS21044N3	96906	149		MS21044N4	96906	104	
MS21044N3	96906	150		MS21044N4	96906	104	
MS21044N3	96906	152		MS21044N4	96906	104	
MS21044N3	96906	154		MS21044N4	96906	104	
MS21044N3	96906	154		MS21044N4	96906	105	
MS21044N3	96906	154		MS21044N4	96906	107	
MS21044N3	96906	158		MS21044N4	96906	108	
MS21044N3	96906	160		MS21044N4	96906	115	
MS21044N3	96906	162		MS21044N4	96906	116	
MS21044N3	96906	165		MS21044N4	96906	116	
MS21044N3	96906	167		MS21044N4	96906	116	
MS21044N3	96906	169		MS21044N4	96906	116	
MS21044N3	96906	170		MS21044N4	96906	117	
MS21044N3	96906	176		MS21044N4	96906	117	
MS21044N3	96906	176		MS21044N4	96906	117	
MS21044N3	96906	178		MS21044N4	96906	117	
MS21044N3	96906	180		MS21044N4	96906	117	
MS21044N3	96906	181		MS21044N4	96906	117	
MS21044N3	96906	182		MS21044N4	96906	117	
MS21044N3	96906	182		MS21044N4	96906	117	
MS21044N3	96906	182		MS21044N4	96906	117	
MS21044N3	96906	210	31	MS21044N4	96906	117	
MS21044N3	96906	215	4	MS21044N4	96906	117	
MS21044N3	96906	125A	144	MS21044N4	96906	117	5
MS21044N3	96906	175D	45	MS21044N4	96906	118	
MS21044N3	96906	175E	6	MS21044N4	96906	118	
MS21044N4	96906	11		MS21044N4	96906	118	144
MS21044N4	96906	12		MS21044N4	96906	118	44
MS21044N4	96906	17	24	MS21044N4	96906	118	93
MS21044N4	96906	21	42A	MS21044N4	96906	120	
MS21044N4	96906	27	4	MS21044N4	96906	125	
MS21044N4	96906	32		MS21044N4	96906	152	
MS21044N4	96906	35		MS21044N4	96906	153	
MS21044N4	96906	36	8	MS21044N4	96906	155	
MS21044N4	96906	37		MS21044N4	96906	156	
MS21044N4	96906	38		MS21044N4	96906	156	18
MS21044N4	96906	41		MS21044N4	96906	158	
MS21044N4	96906	43	74A	MS21044N4	96906	158	40
MS21044N4	96906	46		MS21044N4	96906	158	7
MS21044N4	96906	51		MS21044N4	96906	165	
MS21044N4	96906	52		MS21044N4	96906	165	
MS21044N4	96906	55	61	MS21044N4	96906	174	
MS21044N4	96906	56		MS21044N4	96906	175	
MS21044N4	96906	59		MS21044N4	96906	176	
MS21044N4	96906	61		MS21044N4	96906	179	22
MS21044N4	96906	64		MS21044N4	96906	175D	18
MS21044N4	96906	69		MS21044N5	96906	22	2A
MS21044N4	96906	74		MS21044N5	96906	22	3
MS21044N4	96906	74		MS21044N5	96906	23	17A
MS21044N4	96906	75		MS21044N5	96906	23	18
MS21044N4	96906	75		MS21044N5	96906	25	
MS21044N4	96906	78		MS21044N5	96906	32	172
MS21044N4	96906	79		MS21044N5	96906	32	175
MS21044N4	96906	82		MS21044N5	96906	32	179
MS21044N4	96906	84		MS21044N5	96906	36	13
MS21044N4	96906	85		MS21044N5	96906	36	4
MS21044N4	96906	87		MS21044N5	96906	37	
MS21044N4	96906	87	149	MS21044N5	96906	38	
MS21044N4	96906	87	162	MS21044N5	96906	41	
MS21044N4	96906	87	166	MS21044N5	96906	74	
MS21044N4	96906	87	170	MS21044N5	96906	75	
MS21044N4	96906	88		MS21044N5	96906	82	
MS21044N4	96906	89		MS21044N5	96906	82	12
MS21044N4	96906	96		MS21044N5	96906	82	28
MS21044N4	96906	96		MS21044N5	96906	82	37
MS21044N4	96906	98		MS21044N5	96906	82	54
MS21044N4	96906	99		MS21044N5	96906	82	78
MS21044N4	96906	101		MS21044N5	96906	83	
MS21044N4	96906	101		MS21044N5	96906	84	
MS21044N4	96906	101		MS21044N5	96906	87	
MS21044N4	96906	102		MS21044N5	96906	91	

REFERENCE NUMBER	MFG CODE	FIG NUMBER	ITEM NUMBER	REFERENCE NUMBER	MFG CODE	FIG NUMBER	ITEM NUMBER
MS21044N5	96906	98		MS21077-08	96906	79	181
MS21044N5	96906	99		MS21077-4	96906	BULK	
MS21044N5	96906	99	4A	MS21078-08	96906	BULK	
MS21044N5	96906	105	20	MS21078-3	96906	49	12
MS21044N5	96906	115		MS21078-3	96906	49	6
MS21044N5	96906	120		MS21078-3	96906	50	215
MS21044N5	96906	125		MS21078-3	96906	50	277
MS21044N5	96906	151	15	MS21078-3	96906	50	280
MS21044N5	96906	151	21	MS21078-3	96906	50	310
MS21044N5	96906	155		MS21078-3	96906	74	37
MS21044N5	96906	157	8	MS21078-3	96906	75	50
MS21044N5	96906	158	53A	MS21078-3	96906	76	52
MS21044N5	96906	158	73	MS21078-3	96906	132	98
MS21044N5	96906	158	77	MS21078-3	96906	145	11
MS21044N5	96906	162		MS21078-3	96906	BULK	
MS21044N5	96906	174		MS21078-4	96906	BULK	
MS21044N5	96906	175		MS21078-5	96906	BULK	
MS21044N5	96906	176		MS21081-3	80205	74	32
MS21044N5	96906	179	6	MS21081-3	96906	75	45
MS21044N5	96906	181		MS21081-3	96906	BULK	
MS21044N5	96906	182	14	MS21081-5	96906	51	9
MS21044N5	96906	184	14	MS21081-5	96906	52	38
MS21044N5	96906	185	1	MS21081-5	96906	BULK	
MS21044N5	96906	205	19	MS21083-D3	96906	119	
MS21044N5	96906	206	3	MS21083B3	96906	138	
MS21044N5	96906	206	60	MS21083D08	96906	138	
MS21044N5	96906	213	2	MS21083D08	96906	139	
MS21044N5	96906	76B	2	MS21083D08	96906	154	
MS21044N5	96906	183A		MS21083D08	96906	180	
MS21044N6	96906	23	22A	MS21083D28	96906	138	
MS21044N6	96906	25		MS21083D3	96906	70	
MS21044N6	96906	26	8A	MS21083D3	96906	87	
MS21044N6	96906	36	19	MS21083D3	96906	119	
MS21044N6	96906	98		MS21083D3	96906	132	
MS21044N6	96906	99		MS21083D3	96906	132	
MS21044N6	96906	172		MS21083D3	96906	136	
MS21044N6	96906	175		MS21083D3	96906	136	
MS21044N6	96906	176		MS21083D3	96906	138	
MS21044N6	96906	179		MS21083D3	96906	139	
MS21044N6	96906	206	55	MS21083D4	96906	112	44
MS21044N6	96906	206	64	MS21083D4	96906	119	
MS21044N6	96906	214	2	MS21083N06	96906	77	
MS21044N6	96906	162B	7	MS21083N06	96906	95	
MS21044N7	96906	24		MS21083N06	96906	96	
MS21044N7	96906	24	5A	MS21083N06	96906	96	11
MS21044N8	96906	176	40	MS21083N06	96906	106	
MS21044N8	96906	84A	1	MS21083N06	96906	106	6
MS21044N8	96906	84B	5	MS21083N06	96906	118	
MS21044N8	96906	123B	19	MS21083N06	96906	136	
MS21044N9	96906	24		MS21083N06	96906	79B	9
MS21045-6	96906	183		MS21083N12	96906	17	19
MS21045-6	96906	183		MS21083N12	96906	BULK	
MS21045-8	96906	BULK		MS21083N4	96906	193	2
MS21045C08	96906	BULK		MS21083N4	96906	208	12
MS21045C3	96906	46		MS21083N4	96906	208	31
MS21045C3	96906	112		MS21083N4	96906	208	37
MS21045C3	96906	169		MS21083N4	96906	211	1
MS21045C4	96906	39		MS21083N4	96906	190A	32
MS21045C4	96906	171		MS21083N4	96906	214A	
				MS21083N5	96906	32	173
MS21045LC4	96906	171		MS21083N5	96906	43	
MS21045L4	96906	169		MS21083N5	96906	87	
MS21045L4	96906	169	38	MS21083N5	96906	91	
MS21045L5	96906	BULK		MS21083N5	96906	93	
MS21045L6	96906	75		MS21083N5	96906	105	
MS21045L6	96906	207	1	MS21083N5	96906	112	34
MS21045L7	96906	176		MS21083N5	96906	116	
MS21045L8	96906	BULK		MS21083N5	96906	116	
MS21047-3	96906	43		MS21083N5	96906	119	
MS21048-3	96906	BULK		MS21083N5	96906	122	
MS21059L4	96906	154	163	MS21083N5	96906	163	

REFERENCE NUMBER	MFG CODE	FIG NUMBER	ITEM NUMBER	REFERENCE NUMBER	MFG CODE	FIG NUMBER	ITEM NUMBER
MS21083N5	96906	165		MS24390D4	96906	85	61
MS21083N5	96906	207	19	MS24390D4	96906	124	43
MS21083N5	96906	208	2	MS24390D4	96906	145	
MS21083N5	96906	208	9	MS24391-21	96906	85B	22
MS21208C4-20	96906	BULK		MS24391-26	96906	BULK	
MS21208C6-20	96906	BULK		MS24391-4L	96906	17	3
MS21208F1-10	96906	106	143	MS24391DL5	96906	34	1
MS21208F1-20	96906	106	141	MS24391D4L	96906	31	16
MS21208F6-10	96906	BULK		MS24391D4L	96906	31	26
MS21251B3L	96906	57	1	MS24391D4L	96906	34	3
MS21251B3L	96906	BULK		MS24391D4L	96906	78	19
MS21256-1	96906	BULK		MS24391D4L	96906	145	
MS21256-2	96906	152	27	MS24391D4L	96906	149	31
MS21258-39	96906	162	40	MS24391D4L	96906	81A	4
MS21267-6	96906	213		MS24391D5L	96906	149	33
MS21318-1	96906	35A	30	MS24391D5L	96906	BULK	
MS21318-1	96906	76B	27	MS24391D6L	96906	33	35
MS21318-1	96906	79A	47	MS24391D6L	96906	147	26
MS21318-1	96906	81A	34	MS24391D6L	96906	148	13
MS21318-1	96906	85B	41	MS24391D8L	96906	103	26
MS21318-1	96906	104A	2	MS24391D8L	96906	35A	34
MS21318-1	96906	114H	5	MS24392-10	96906	BULK	
MS21318-1	96906	114J	3	MS24392-4	96906	144	25
MS21318-1	96906	175C	21	MS24392-4	96906	144	27
MS21318-1	96906	175C	38	MS24392-4	96906	145	20
MS21318-1	96906	175G	9	MS24392-4	96906	162	1C
MS21318-1	96906	175H	13	MS24392D10	96906	77	102
MS21318-1	96906	175H	42	MS24392D10	96906	77	60
MS21318-13	96906	BULK		MS24392D10	96906	77	67
MS21318-14	96906	BULK		MS24392D10	96906	77	97
MS21318-21	96906	113		MS24392D10	96906	BULK	
MS21318-21	96906	114		MS24392D12	96906	79	116
MS21318-22	96906	212A	59	MS24392D12	96906	79	63
MS21318-27	96906	BULK		MS24392D12	96906	79	98
MS21318-7	96906	84A	25	MS24392D12	96906	80	95
MS21318-7	96906	84B	27	MS24392D12	96906	BULK	
MS21318-7	96906	114B	18	MS24392D16	96906	76	1
MS21318-7	96906	114D		MS24392D16	96906	174	20
MS21318-7	96906	175D	2	MS24392D4	96906	12	56
MS21318-7	96906	175E	23	MS24392D4	96906	32	14
MS21318-7	96906	181A	10	MS24392D4	96906	32	19
MS21318-8	96906	83A	13	MS24392D4	96906	32	9
MS21318-8	96906	123B	27	MS24392D4	96906	54	20
MS21337-2	96906	BULK		MS24392D4	96906	54	31
MS21337-3	96906	20	13	MS24392D4	96906	54	45
MS21337-3	96906	81	84	MS24392D4	96906	54	6
MS21621-16	96906	175D	84	MS24392D4	96906	77	
MS21920-45R	96906	12	44	MS24392D4	96906	85	18
MS21920-53R	96906	BULK		MS24392D4	96906	85	29
MS21920-57R	96906	170	6	MS24392D4	96906	85	40
MS21920-61R	96906	BULK		MS24392D4	96906	96	129
MS220251	96906	115		MS24392D4	96906	124	17
MS23006-3	96906	154	7	MS24392D4	96906	124	22
MS23207-264	96906	79	144	MS24392D4	96906	124	49
MS24149D1	96906	75		MS24392D4	96906	124	55
MS24149D1	96906	BULK		MS24392D4	96906	144	104
MS24166D1	96906	138	51	MS24392D4	96906	144	139
MS24166D1	96906	139	48	MS24392D4	96906	144	85
MS24171D1	96906	129	24	MS24392D4	96906	145	107
MS24171D1	96906	138	21	MS24392D4	96906	145	87
MS24172D1	96906	138	22	MS24392D4	96906	162	2
MS24269-11	88044	61	9	MS24392D4	96906	BULK	
MS24388D8	96906	33		MS24392D6	96906	74	16
MS24389D10	96906	BULK		MS24392D6	96906	75	28
MS24389D4	96906	33		MS24392D8	96906	32	101
MS24389D4	96906	85		MS24392D8	96906	32	30
MS24389D6	96906	33	28	MS24392D8	96906	32	56
MS24389D6	96906	148		MS24392D8	96906	32	60
MS24389D8	96906	148		MS24392D8	96906	32	65
MS2439LD4L	96906	181A	73	MS24392D8	96906	32	70
MS24390D4	96906	85		MS24392D8	96906	32	87

REFERENCE NUMBER	MFG CODE	FIG NUMBER	ITEM NUMBER	REFERENCE NUMBER	MFG CODE	FIG NUMBER	ITEM NUMBER
MS24392D8	96906	32	92	MS24394D8	96906	BULK	
MS24392D8	96906	32	97	MS24395D16	96906	76	45
MS24392D8	96906	35	18	MS24395D4	96906	32	47
MS24392D8	96906	35	26	MS24395D4	96906	85	48A
MS24392D8	96906	35	5	MS24395D4	96906	85	52A
MS24392D8	96906	76	53	MS24395D4	96906	148	
MS24392D8	96906	80	69	MS24395D4	96906	BULK	
MS24392D8	96906	81	47	MS24395D6	96906	32	181A
MS24392D8	96906	96	125	MS24395D6	96906	32	182A
MS24392D8	96906	96	127	MS24395D6	96906	32	184A
MS24392D8	96906	110	60	MS24395D6	96906	32	185A
MS24392D8	96906	144	118	MS24395D6	96906	148	
MS24392D8	96906	145	142	MS24395D6	96906	BULK	
MS24392D8	96906	145	152	MS24395D8	96906	33	7
MS24392D8	96906	145	164	MS24395D8	96906	80	59
MS24392D8	96906	145	169	MS24395D8	96906	148	
MS24392D8	96906	145	25	MS24396-6	96906	145	
MS24392D8	96906	35A	31	MS24396D10	96906	31	23
MS24393D12	96906	79		MS24396D10	96906	145	
MS24393D8	96906	32	28	MS24396D12	96906	182	
MS24393D8	96906	33	30	MS24396D12	96906	182	10
MS24393D8	96906	35	22	MS24396D12	96906	BULK	
MS24394D10	96906	31	11	MS24396D16	96906	22	8
MS24394D10	96906	145		MS24396D16	96906	76	3
MS24394D10	96906	147		MS24396D16	96906	182	
MS24394D10	96906	148		MS24396D4	96906	11	
MS24394D10	96906	BULK		MS24396D4	96906	32	187
MS24394D12	96906	83	9	MS24396D4	96906	85	
MS24394D12	96906	84		MS24396D4	96906	124	
MS24394D16	96906	174		MS24396D4	96906	144	
MS24394D20	96906	74		MS24396D4	96906	144	
MS24394D20	96906	75		MS24396D4	96906	144	
MS24394D20	96906	BULK		MS24396D4	96906	144	
MS24394D4	96906	31	7	MS24396D4	96906	145	
MS24394D4	96906	32		MS24396D4	96906	BULK	
MS24394D4	96906	32	206	MS24396D6	96906	32	
MS24394D4	96906	32	43	MS24396D8	96906	32	
MS24394D4	96906	80		MS24396D8	96906	35	6
MS24394D4	96906	81		MS24396D8	96906	144	
MS24394D4	96906	85	15	MS24396D8	96906	144	
MS24394D4	96906	85	56A	MS24396D8	96906	144	
MS24394D4	96906	97	7	MS24396D8	96906	145	
MS24394D4	96906	106	40	MS24397D12	96906	147	33
MS24394D4	96906	124		MS24397D3	96906	85	25
MS24394D4	96906	124	41	MS24397D3	96906	162	27
MS24394D4	96906	144		MS24397D4	96906	BULK	
MS24394D4	96906	144		MS24398D4-2	96906	BULK	
MS24394D4	96906	144		MS24398D6-4	96906	32	181B
MS24394D4	96906	162	16	MS24398D6-4	96906	32	182B
MS24394D4	96906	165	7	MS24398D6-4	96906	32	182F
MS24394D4	96906	BULK		MS24398D6-4	96906	32	183D
MS24394D6	96906	32		MS24398D6-4	96906	32	184B
MS24394D6	96906	33	18	MS24398D6-4	96906	32	185B
MS24394D6	96906	33	19	MS24398D6-4	96906	BULK	
MS24394D6	96906	123	73	MS24398D8-4	96906	80	
MS24394D6	96906	145		MS24398D8-6	96906	33	15
MS24394D6	96906	147		MS24398D8-6	96906	33	6
MS24394D6	96906	148		MS24398D8-6	96906	33	8
MS24394D6	96906	181		MS24398D8-6	96906	147	19
MS24394D8	96906	32	160	MS24398D8-6	96906	148	
MS24394D8	96906	33	5	MS2439808-4	96906	BULK	
MS24394D8	96906	35	11	MS24399D10	96906	33	14
MS24394D8	96906	35	12	MS24399D10	96906	81	
MS24394D8	96906	35	17	MS24399D10	96906	110	55
MS24394D8	96906	35	30	MS24399D10	96906	148	28
MS24394D8	96906	75		MS24399D11	96906	35	19
MS24394D8	96906	144		MS24399D14	96906	BULK	
MS24394D8	96906	144		MS24399D16	96906	32	152
MS24394D8	96906	145		MS24399D16	96906	181	17
MS24394D8	96906	147		MS24399D21	96906	32	169
MS24394D8	96906	148		MS24399D21	96906	181	10

REFERENCE NUMBER	MFG CODE	FIG NUMBER	ITEM NUMBER	REFERENCE NUMBER	MFG CODE	FIG NUMBER	ITEM NUMBER
MS24399D26	96906	BULK		MS24401D8	96906	144	64
MS24399D27	96906	79	87	MS24401D8	96906	144	74
MS24399D27	96906	BULK		MS24401D8	96906	145	92
MS24399D6	96906	173	31	MS24402D16	96906	77	38
MS24399D6	96906	BULK		MS24402D16	96906	77	43
MS24399D7	96906	33	13	MS24402D4	96906	32	124
MS24399D7	96906	33	24	MS24402D4	96906	32	138
MS24399D7	96906	34	5	MS24402D4	96906	85	44A
MS24399D7	96906	148	1	MS24402D4	96906	110	50
MS24399D7	96906	149	6	MS24402D4	96906	111	25
MS24399D8	96906	BULK		MS24402D4	96906	111	62
MS24400-10	96906	BULK		MS24402D4	96906	144	44
MS24400-4	96906	145	33	MS24402D4	96906	144	57
MS24400-4	96906	145	43	MS24402D4	96906	145	127
MS24400-4	96906	146	38	MS24403D4	96906	BULK	
MS24400-4	96906	162	24	MS24482-1	96906	175	
MS24400-4	96906	167	16	MS24506-5	96906	BULK	
MS24400-4	96906	181	5	MS24513-4174	96906	154	
MS24400-5	96906	BULK		MS24587-D12	96906	83	6
				MS24619-14	96906	123	25
				MS24619-14	96906	BULK	
MS24400-8	96906	145	38	MS24619-15	88044	123	38
MS24400-8	96906	BULK		MS24619-25	96906	BULK	
MS24400D10	96906	31	9	MS24619-40	96906	BULK	
MS24400D10	96906	79	150	MS24621	96906	214A	173
MS24400D10	96906	80	123	MS24621-11	96906	122	3
MS24400D10	96906	81	106	MS24621-15	96906	48	42
MS24400D10	96906	145	117	MS24621-17	96906	BULK	
MS24400D10	96906	145	53	MS24621-2	96906	214A	197
MS24400D12	96906	79	105	MS24621-2	96906	214A	2
MS24400D12	96906	79	123	MS24621-2	96906	214A	351
MS24400D12	96906	84	9	MS24621-2	96906	214A	495
MS24400D12	96906	182	5	MS24621-2	96906	214A	84
MS24400D16	96906	22	6	MS24621-29	96906	115	2
MS24400D16	96906	76	4	MS24621-29	96906	176	84
MS24400D16	96906	76	46	MS24621-29	96906	BULK	
MS24400D16	96906	174	12	MS24621-30	96906	137	
MS24400D16	96906	174	22	MS24621-31	96906	BULK	
MS24400D16	96906	182	12	MS24621-32	96906	123	43
MS24400D24	96906	74	8	MS24621-32	96906	123	46
MS24400D24	96906	75	8	MS24621-32	96906	123	49
MS24400D4	96906	11	4	MS24621-45	96906	BULK	
MS24400D4	96906	31	2	MS24621-7	96906	175A	40
MS24400D4	96906	31	5	MS24665-155		KITS	
MS24400D4	96906	77	9	MS24665-155	96906	12	
MS24400D4	96906	78	4	MS24665-155	96906	15	
MS24400D4	96906	78	9	MS24665-155	96906	21	
MS24400D4	96906	80	35	MS24665-155	96906	26	
MS24400D4	96906	81	24	MS24665-155	96906	38	
MS24400D4	96906	85	14	MS24665-155	96906	39	
MS24400D4	96906	124	12	MS24665-155	96906	41	
MS24400D4	96906	124	39	MS24665-155	96906	41	
MS24400D4	96906	124	42	MS24665-155	96906	41	132
MS24400D4	96906	124	5	MS24665-155	96906	42	
MS24400D4	96906	124	50	MS24665-155	96906	42	
MS24400D4	96906	124	57	MS24665-155	96906	42	
MS24400D4	96906	124	58	MS24665-155	96906	43	
MS24400D4	96906	124	69	MS24665-155	96906	45	
MS24400D4	96906	124	7	MS24665-155	96906	45	
MS24400D4	96906	145	137	MS24665-155	96906	46	67
MS24400D6	96906	103	2	MS24665-155	96906	47	
MS24400D6	96906	148		MS24665-155	96906	54	52
MS24400D8	96906	75	13	MS24665-155	96906	54	56
MS24400D8	96906	80	53	MS24665-155	96906	55	21
MS24400D8	96906	145	101	MS24665-155	96906	55	27
MS244000D12	96906	BULK		MS24665-155	96906	55	33
MS24401D10	96906	145	108	MS24665-155	96906	55	40
MS24401D4	96906	124	70	MS24665-155	96906	55	46
MS24401D4	96906	144	35	MS24665-155	96906	55	78
MS24401D4	96906	145	102	MS24665-155	96906	55	84
MS24401D4	96906	145	122	MS24665-155	96906	56	

REFERENCE NUMBER	MFG CODE	FIG NUMBER	ITEM NUMBER	REFERENCE NUMBER	MFG CODE	FIG NUMBER	ITEM NUMBER
MS24665-155	96906	56	51	MS24665-155	96906	125A	29
MS24665-155	96906	59		MS24665-155	96906	175A	2
MS24665-155	96906	61		MS24665-155	96906	175A	26
MS24665-155	96906	65	5	MS24665-155	96906	175A	60
MS24665-155	96906	67		MS24665-155	96906	175D	4
MS24665-155	96906	68		MS24665-155	96906	202A	14
MS24665-155	96906	72		MS24665-155	96906	212A	195
MS24665-155	96906	87		MS24665-155	96906	214A	22
MS24665-155	96906	87		MS24665-155	96906	214A	226
MS24665-155	96906	87		MS24665-155	96906	214A	260
MS24665-155	96906	87		MS24665-155	96906	214A	297
MS24665-155	96906	87		MS24665-155	96906	214A	32
MS24665-155	96906	87		MS24665-155	96906	214A	444
MS24665-155	96906	87		MS24665-155	96906	214A	514
MS24665-155	96906	87		MS24665-157	96906	85B	11
MS24665-155	96906	88		MS24665-157	96906	BULK	
MS24665-155	96906	88		MS24665-172	96906	BULK	
MS24665-155	96906	88	1	MS24665-24	96906	69	
MS24665-155	96906	90	10	MS24665-24	96906	96	49
MS24665-155	96906	90	13	MS24665-24	96906	159	
MS24665-155	96906	90	18	MS24665-24	96906	172	
MS24665-155	96906	90	21	MS24665-24	96906	172	
MS24665-155	96906	90	6	MS24665-24	96906	172	
MS24665-155	96906	91		MS24665-24	96906	172	
MS24665-155	96906	91		MS24665-298	96906	BULK	
MS24665-155	96906	93		MS24665-300	96906	167	
MS24665-155	96906	93	1	MS24665-302	96906	12	
MS24665-155	96906	96		MS24665-302	96906	12	11
MS24665-155	96906	101		MS24665-302	96906	13	
MS24665-155	96906	102		MS24665-302	96906	14	
MS24665-155	96906	103		MS24665-302	96906	15	
MS24665-155	96906	104		MS24665-302	96906	16	
MS24665-155	96906	105		MS24665-302	96906	19	14
MS24665-155	96906	105	7	MS24665-302	96906	21	23
MS24665-155	96906	105	8	MS24665-302	96906	21	52
MS24665-155	96906	107		MS24665-302	96906	24	17
MS24665-155	96906	107		MS24665-302	96906	25	35
MS24665-155	96906	107		MS24665-302	96906	27	1
MS24665-155	96906	108		MS24665-302	96906	38	27
MS24665-155	96906	117	95	MS24665-302	96906	39	8
MS24665-155	96906	122		MS24665-302	96906	45	
MS24665-155	96906	122		MS24665-302	96906	107	
MS24665-155	96906	140		MS24665-302	96906	150	
MS24665-155	96906	141		MS24665-302	96906	151	23
MS24665-155	96906	150		MS24665-302	96906	156	14
MS24665-155	96906	152		MS24665-302	96906	157	32
MS24665-155	96906	152		MS24665-302	96906	158	
MS24665-155	96906	152		MS24665-302	96906	158	54
MS24665-155	96906	153		MS24665-302	96906	162	
MS24665-155	96906	157	9	MS24665-302	96906	187	20
MS24665-155	96906	158		MS24665-302	96906	187	35
MS24665-155	96906	158		MS24665-302	96906	189	2
MS24665-155	96906	158	45	MS24665-302	96906	203	1
MS24665-155	96906	159		MS24665-302	96906	204	12
MS24665-155	96906	160		MS24665-302	96906	204	6
MS24665-155	96906	162		MS24665-302	96906	205	4
MS24665-155	96906	169		MS24665-302	96906	208	75
MS24665-155	96906	169		MS24665-302	96906	125A	126
MS24665-155	96906	169		MS24665-302	96906	212A	204
MS24665-155	96906	169		MS24665-302	96906	214A	552
MS24665-155	96906	169		MS24665-302	96906	214A	558
MS24665-155	96906	169	20B	MS24665-309	96906	38	49
MS24665-155	96906	170	11	MS24665-353	96906	BULK	
MS24665-155	96906	173		MS24665-370	96906	88	34
MS24665-155	96906	187	1	MS24665-370	96906	118	
MS24665-155	96906	190	2	MS24665-370	96906	188	6
MS24665-155	96906	200		MS24665-370	96906	BULK	
MS24665-155	96906	205	12	MS24665-370	96906	190A	1
MS24665-155	96906	35A	26	MS24665-377	96906	BULK	
MS24665-155	96906	85B	26	MS24665-330	96906	BULK	
MS24665-155	96906	125A	15	MS24665-47	96906	214A	141

REFERENCE NUMBER	MFG CODE	FIG NUMBER	ITEM NUMBER	REFERENCE NUMBER	MFG CODE	FIG NUMBER	ITEM NUMBER
MS24665-520	96906	162	41	MS25022-22	96906	BULK	
MS24665-520	96906	BULK		MS25025-1	96906	113	
MS24665-82	96906	BULK		MS25025-1	96906	114	
MS24692-53P	96906	BULK		MS25027-1	96906	11	44
MS24692-77D	96906	106	12	MS25027-1	88044	132	88
MS24693A273	88044	179	12	MS25036	96906	132	156
MS24693C275	96906	43		MS25036	96906	132	62
MS24693S272	88044	122	63	MS25036-1	96906	137	
MS24693S275	96906	BULK		MS25036-1	96906	137	
MS24693S294	96906	24	20	MS25036-1	96906	137	
MS24693S294	96906	BULK		MS25036-1	96906	137	26
MS24693S47	96906	BULK		MS25036-1	96906	137	6
MS24693S48	96906	37	3	MS25036-1	96906	125A	
MS24693S48	96906	44C	39	MS25036-10	96906	BULK	
MS24693S50	96906	37	2	MS25036-11	96906	BULK	
MS24693S76	96906	BULK		MS25036-12	96906	123B	10
MS24694C54	96906	50	258	MS25036-13	96906	BULK	
MS24694C54	96906	50	263	MS25036-14	96906	BULK	
MS24694C54	96906	50	384	MS25036-27	96906	BULK	
MS24694C54	96906	50	389	MS25036-3	96906	BULK	
MS24694C64	96906	41		MS25036-30	96906	BULK	
MS24694S	96906	81	18	MS25036-5	96906	BULK	
MS24694S101	96906	79	18	MS25036-54	96906	BULK	
MS24694S101	96906	79	26	MS25036-54	96906	113B	52
MS24694S101	96906	79	38	MS25036-57	96906	BULK	
MS24694S101	96906	79	48	MS25036-57	96906	123B	12
MS24694S101	96906	157	31	MS25036-6	96906	75	
MS24694S101	96906	158	8	MS25036-6	96906	BULK	
MS24694S109	96906	156	5	MS25036-8	96906	BULK	
MS24694S111	96906	105	17	MS25038-2	96906	11	27
MS24694S48	96906	BULK		MS25038-2	96906	175	5
MS24694S50	96906	117	111	MS25041-4	96906	114	16
MS24694S50	96906	118	77	MS25041-4	96906	131	29
MS24694S50	96906	172	110	MS25041-4	96906	132	15
MS24694S50	96906	172	112	MS25041-6	96906	113	26
MS24694S54	96906	42	53	MS25041-6	96906	113	28
MS24694S54	96906	42	55	MS25041-6	96906	114	32
MS24694S54	96906	81	40	MS25041-6	96906	131	18
MS24694S56	96906	BULK		MS25041-6	96906	131	9
MS24694S58	96906	80	18	MS25041-6	96906	132	21
MS24694S58	96906	80	29	MS25041-6	96906	135	10
MS24694S58	96906	80	51	MS25041-8	96906	131	
MS24694S60	96906	BULK		MS25083-18C4	96906	77	129
MS246944S101	96906	BULK		MS25083-18C4	96906	77	131
MS25010-4A	96906	113		MS25085-1	96906	128A	70
MS25010-4A	96906	113	6	MS25089-4F	96906	129	4
MS25010-4A	96906	114		MS25089-5A	96906	87	
MS25010-4A	96906	114	9	MS25089-5A	96906	87	11
MS25010-4A	96906	130	22	MS25103-24	96906	BULK	
MS25010-4A	96906	131	27	MS25104-21	96906	130	
MS25010-4A	96906	132	13	MS25105-21	96906	130	30
MS25010-4A	96906	135	12	MS25105-21	96906	131	17
MS25010B11A	96906	BULK		MS25105-21	96906	132	24
MS25011-1	96906	131	42A	MS25123-1-20	96906	132	
MS25011-1	96906	125A	68	MS25123-1-20	96906	132	6
MS25011-1	96906	125A	75	MS25123-2-1	96906	131	
MS25016-4	96906	135	16	MS25173-1	96906	138	48
MS25017-10	96906	130	57	MS25178-10		KITS	
MS25017-10	96906	130	59	MS25190B1	96906	BULK	
MS25017-15	96906	130	54	MS25190B10	96906	BULK	
MS25017-20	96906	130	60	MS25190B14	96906	BULK	
MS25017-25	96906	130		MS25190B16	96906	BULK	
MS25017-35	96906	130	58	MS25190B18	96906	BULK	
MS25017-5	96906	130	53	MS25190B2	96906	140	
MS25017-5	96906	130	56	MS25190B2	96906	BULK	
MS25017-5	96906	130	62	MS25190B20	96906	137	
MS25017-5	96906	138	11	MS25190B20	96906	BULK	
MS25017-5	96906	138	28	MS25190B22	96906	BULK	
MS25017-50	96906	130	55	MS25190B4	96906	BULK	
MS25017-50	96906	130	61	MS25190B8	96906	BULK	
MS25021-14	96906	140		MS25219-1	96906	129	

REFERENCE NUMBER	MFG CODE	FIG NUMBER	ITEM NUMBER	REFERENCE NUMBER	MFG CODE	FIG NUMBER	ITEM NUMBER
MS25219-1	96906	134	12	MS26541-1	96906	80	98
MS25219-1	96906	154	5	MS26541-1	96906	81	81
MS25219-4	96906	129		MS26556-1	96906	115	46
MS25224-1	96906	130	69	MS26556-1	96906	115	47
MS25224-3	96906	130	36	MS27053-16	96906	BULK	
MS25224-3	96906	130	41	MS27053-6C	96906	BULK	
MS25224-3	96906	131	41	MS27061-10	96906	BULK	
MS25224-3	96906	132	55	MS27061-10C	96906	BULK	
MS25224-3	96906	BULK		MS27061-12	96906	BULK	
MS25226-2-2	96906	138	8	MS27061-12C	96906	BULK	
MS25226-2-2	96906	139	12	MS27061-16	96906	BULK	
MS25226-2-2	96906	139	15	MS27061-3C	96906	BULK	
MS25226-2-20	96906	138	9	MS27061-4C	96906	BULK	
MS25226-2-5	96906	139	13	MS27061-5C	96906	BULK	
MS25231-313	96906	113		MS27061-6C	96906	BULK	
MS25231-313	96906	114	33	MS27061-8C	96906	BULK	
MS25231-313	96906	129	15	MS27062-8C	96906	BULK	
MS25231-313	96906	131		MS27063-10C	96906	BULK	
MS25231-313	96906	132	87	MS27063-12	96906	BULK	
MS25231-313	96906	134	11	MS27063-12C	96906	BULK	
MS25231-313	96906	135		MS27063-16C	96906	BULK	
MS25231-313	96906	135	11	MS27064-16C	96906	BULK	
MS25231-313	96906	138		MS27065-12	96906	BULK	
MS25231-313	96906	139		MS27065-12C	96906	BULK	
MS25231-313	96906	150	6	MS27065-16C	96906	BULK	
MS25231-313	96906	150	9	MS27067-6C	96906	BULK	
MS25231-313	96906	BULK		MS27067-8C	96906	BULK	
MS25232-307	96906	130	73	MS27068-3C	96906	BULK	
MS25232-307	96906	131	48	MS27068-4C	96906	BULK	
MS25232-307	96906	132	72	MS27068-6C	96906	BULK	
MS25232-307	96906	134	16	MS27068-8C	96906	BULK	
MS25232-307	96906	138		MS27069-10C	96906	BULK	
MS25232-307	96906	139		MS27069-12C	96906	BULK	
MS25232-307	96906	154	8	MS27069-16C	96906	BULK	
MS25235R311	96906	130	74	MS27069-3C	96906	BULK	
MS25235R311	96906	131	49	MS27069-4C	96906	BULK	
MS25235R311	96906	132	73	MS27069-5C	96906	BULK	
MS25235R311	96906	138		MS27069-6C	96906	BULK	
MS25235R311	96906	139		MS27069-8C	96906	BULK	
MS25237-327	96906	130		MS27070-10C	96906	BULK	
MS25237-327	96906	130	16	MS27070-12C	96906	BULK	
MS25237-327	96906	130	49	MS27070-16C	96906	BULK	
MS25237-327	96906	131	19	MS27070-3C	96906	BULK	
MS25237-327	96906	131	28	MS27070-4C	96906	BULK	
MS25237-327	96906	131	30	MS27070-5C	96906	BULK	
MS25237-327	96906	132	14	MS27070-8C	96906	BULK	
MS25237-327	96906	132	16	MS27130-12	96906	BULK	
MS25237-327	96906	132	22	MS27130-16	96906	BULK	
MS25237-327	96906	135	13	MS27130-16K	96906	48	32
MS25241-4581	96906	128A	11	MS27130-18K	96906	BULK	
MS25243-4502	96906	138	55	MS27130-8K	96906	BULK	
MS25243-4502	96906	139	39	MS27183-13	96906	43	85
MS25253-2	96906	58	8	MS27183-13	96906	84	
MS25253-2	96906	67	7	MS27183-4	96906	101	
MS25309-7512	96906	134	5	MS27183-4	96906	113B	25
MS25331-6	96906	135	17A	MS27212-1-1	96906	75	
MS25331-6	96906	BULK		MS27212-1-20	96906	131	
MS25338-7079	96906	154		MS27212-1-20	96906	132	
MS25338-7079	96906	BULK		MS27212-1-20	96906	139	16
MS25358-1	96906	130	71	MS27212-1-20	96906	BULK	
MS25358-1	96906	131	46	MS27212-4-8	96906	BULK	
MS25358-1	96906	132	70	MS2736E0540	96906	162	1
MS25358-1	96906	138	6	MS27363E0030	96906	144	119
MS25358-1	96906	139	6	MS27363E0120	96906	12	47
MS25435-15	96906	140		MS27363E0140	96906	144	140
MS25435-15	96906	BULK		MS27363E0140	96906	181	6
MS25452-1	96906	BULK		MS27363E0210	96906	74	70
MS26508-4S10	96906	87		MS27363E0210	96906	75	86
MS26519	96906	56		MS27363E0230	96906	167	12
MS26524-2	96906	56		MS27363E0240	96906	11	8
MS26541-1	96906	79	163	MS27363E0360	96906	11	3

REFERENCE NUMBER	MFG CODE	FIG NUMBER	ITEM NUMBER	REFERENCE NUMBER	MFG CODE	FIG NUMBER	ITEM NUMBER
MS27363G0270	96906	32	183				
MS27373H0110	96906	85	17	MS28741-4-0182	96906	167	14
MS28004-1	96906	113	20	MS28741-4-0230	96906	167	
MS28004-1	96906	114	23	MS28741-4-0540	96906	162	
MS28005-3	96906	11	5	MS28741-6-0144	96906	181	
MS28005-3	96906	77	17	MS28741-6-0230	96906	32	
MS28005-5	96906	32		MS28741-6-0330	96906	32	126
MS28009-1	96906	113	21	MS28741-8-0224	96906	32	
MS28009-1	96906	113	24	MS28760-6	96906	BULK	
MS28009-1	96906	114	22	MS28774-110	96906	103	35
MS28009-1	96906	114	28	MS28774-110	96906	103	42
MS28009-1	96906	114	31	MS28774-111	96906	106	122
MS28009-2	96906	113		MS28774-111	96906	106	124
MS28009-2	96906	114		MS28774-112		KITS	
MS28010-1	96906	113	23	MS28774-112	96906	106	103
MS28010-1	96906	114	29	MS28774-112	96906	106	75
MS28010-3	96906	113	22	MS28774-112	96906	106	80
MS28010-3	96906	113	25	MS28774-112	96906	106	93
MS28010-3	96906	114	21	MS28774-113		KITS	
MS28010-3	96906	114	27	MS28774-114	96906	BULK	
MS28024-1	96906	113		MS28774-16	96906	96	
MS28024-1	96906	114		MS28774-20	96906	96	
MS28024-3	96906	113		MS28774-211	96906	106	100
MS28024-3	96906	114		MS28774-211	96906	106	90
MS28024-3	96906	114	41	MS28774-212		KITS	
MS28028-1	96906	109	1	MS28774-212	96906	106	134
MS28034-1	96906	25	31	MS28774-212	96906	106	135
MS28034-1	96906	31	37	MS28774-212	96906	85B	44
MS28034-1	96906	174	1	MS28774-213		KITS	
MS28034-2	96906	170	8	MS28774-213	96906	106	106
MS28034-2	96906	174		MS28774-214		KITS	
MS28042-1	96906	113		MS28774-228		KITS	
MS28042-1	96906	114		MS28774-233		KITS	
MS28042-2	96906	113		MS28774-234		KITS	
MS28042-2	96906	114		MS28774-24	96906	96	
MS28042-2	96906	BULK		MS28774-26	96906	96	
MS28044-1	96906	114		MS28774-329		KITS	
MS28044LI	96906	114		MS28774-334	96906	BULK	
MS28044L1A	96906	114		MS28775-006	96906	114L	53
MS28044L1A	96906	114	40	MS28775-006	96906	114T	25
MS28045T1	96906	113		MS28775-008	96906	104A	34
MS28045T1	96906	114		MS28775-008	96906	113F	16
MS28045T2	96906	113		MS28775-008	96906	113F	21
MS28049-1	96906	113		MS28775-010		KITS	
MS28049-1	96906	113	9A	MS28775-010	96906	103	5[illegible]
MS28049-1	96906	114		MS28775-010	96906	106	129
MS28049-1	96906	114	12A	MS28775-010	96906	35A	19
MS28055-11	96906	113B	4	MS28775-010	96906	84A	17
MS28055-2	96906	113B	6	MS28775-010	96906	125B	2
MS28105-15	96906	114D		MS28775-010	96906	162A	6
MS28105-16	96906	BULK		MS28775-010	96906	181A	27
MS28105-16	96906	113E	36	MS28775-011		KITS	
MS28105-16	96906	114B	6	MS28775-011	96906	34	31
MS28105-16	96906	114D	6	MS28775-011	96906	96	122
MS28105-16	96906	114E	3	MS28775-011	96906	149	30
MS28105-16	96906	114G	9	MS28775-011	96906	166	9
MS28105-16	96906	114H	10	MS28775-011	96906	104A	7
MS28105-16	96906	114J	8	MS28775-012		KITS	
MS28105-16	96906	114L	13	MS28775-012	96906	12	57
MS28105-16	96906	114S	3	MS28775-012	96906	17	11
MS28105-17	96906	114A	14	MS28775-012	96906	17	4
MS28105-17	96906	114C	26	MS28775-012	96906	103	28
MS28105-17	96906	114T	6	MS28775-012	96906	103	43
MS28720-8	96906	32	161	MS28775-012	96906	44B	11
MS28720-8	96906	35	33	MS28775-012	96906	101A	
MS28720-8	96906	144	13	MS28775-012	96906	101A	64
MS28720-8	96906	145	27	MS28775-016	96906	104A	8
MS28740-16	96906	BULK		MS28775-016	96906	101A	24
MS28740-5	96906	BULK		MS28775-022		KITS	
MS28741-12-0170	96906	84		MS28775-022	96906	85B	43
MS28741-4-0060	96906	144	30	MS28775-113	96906	97	50

REFERENCE NUMBER	MFG CODE	FIG NUMBER	ITEM NUMBER	REFERENCE NUMBER	MFG CODE	FIG NUMBER	ITEM NUMBER
MS28775-113	96906	100	37	MS28776M2-26	96906	164	13
MS28775-113	96906	100	56	MS28777-10	96906	31	22
MS28775-113	96906	106	95	MS28777-10	96906	32	167
MS28775-113	96906	104A	10	MS28777-10	96906	147	
MS28775-115	96906	BULK		MS28777-10	96906	148	
MS28775-116		KITS		MS28777-3	96906	28	4
MS28775-116	96906	12	55	MS28777-4		KITS	
MS28775-116	96906	103	7	MS28777-4	96906	17	18
MS28775-116	96906	106	17	MS28777-4	96906	32	
MS28775-116	96906	181A		MS28777-4	96906	32	205
MS28775-210	96906	31	19	MS28777-4	96906	32	46
MS28775-210	96906	31	31	MS28777-4	96906	33	
MS28775-210	96906	BULK		MS28777-4	96906	54	24
MS28775-211		KITS		MS28777-4	96906	54	48
MS28775-211	96906	17	30	MS28777-4	96906	85	
MS28775-211	96906	92	16	MS28777-4	96906	97	5
MS28775-211	96906	92	7	MS28777-4	96906	106	39
MS28775-211	96906	96	115	MS28777-4	96906	144	
MS28775-211	96906	96	118	MS28777-4	96906	144	
MS28775-211	96906	106	89	MS28777-4	96906	144	
MS28775-211	96906	106	99	MS28777-4	96906	144	
MS28775-211	96906	181A		MS28777-4	96906	145	
MS28775-212		KITS		MS28777-4	96906	147	
MS28775-212	96906	25	33	MS28777-4	96906	148	
MS28775-212	96906	97	35	MS28777-4	96906	162	15
MS28775-212	96906	97	37	MS28777-4	96906	165	10
MS28775-212	96906	97	38	MS28777-4	96906	181	
MS28775-212	96906	97	40	MS28777-6	96906	32	
MS28775-212	96906	97	42	MS28777-6	96906	33	
MS28775-212	96906	97	43	MS28777-6	96906	147	
MS28775-212	96906	97	45	MS28777-6	96906	148	
MS28775-212	96906	97	47	MS28777-6	96906	181	
MS28775-212	96906	97	48	MS28777-8	96906	28	21
MS28775-212	96906	106	133	MS28777-8	96906	32	
MS28775-212	96906	85B	29	MS28777-8	96906	32	159
MS28775-212	96906	85B	38	MS28777-8	96906	32	42
MS28775-212	90166	181A	70	MS28777-8	96906	33	
MS28775-213	96906	100	48	MS28777-8	96906	35	
MS28775-213	96906	106	105	MS28777-8	96906	35	29
MS28775-213	96906	181A	17	MS28777-8	96906	144	
MS28775-214		KITS		MS28777-8	96906	144	
MS28775-214	96906	25		MS28777-8	96906	144	
MS28775-214	96906	100	32	MS28777-8	96906	144	
MS28775-214	96906	100	33	MS28777-8	96906	145	
MS28775-214	96906	BULK		MS28777-8	96906	147	
MS28775-214	96906	181A		MS28777-8	96906	148	
MS28775-215	96906	96	106	MS28777B3		KITS	
MS28775-215	96906	96	39	MS28778-10		KITS	
MS28775-216	96906	BULK		MS28778-10	96906	25	29
MS28775-217	96906	17	32	MS28778-10	96906	31	10
MS28775-217	96906	76	12	MS28778-10	96906	31	14
MS28775-218	96906	92	10	MS28778-10	96906	31	21
MS28775-218	96906	35A	6	MS28778-10	96906	31	29
MS28775-219	96906	96	101	MS28778-10	96906	32	153
MS28775-222	96906	76B	15	MS28778-10	96906	32	166
MS28775-222	96906	BULK		MS28778-10	96906	84	2
MS28775-222	96906	104A	20	MS28778-10	96906	147	
MS28775-226	96906	76	38	MS28778-10	96906	148	
MS28775-229		KITS		MS28778-10	96906	157	28
MS28775-229	96906	181A	65	MS28778-10	96906	181	
MS28775-237	96906	16	36	MS28778-12	96906	32	170
MS28775-243	96906	125A	123	MS28778-12	96906	84	
MS28775-326	96906	85	26G	MS28778-12	96906	181	
MS28775-329	96906	166	12	MS28778-12	96906	182	8
MS28775-330	96906	84A	16	MS28778-16		KITS	
MS28775-330	96906	84B	18	MS28778-2		KITS	
MS28775-346	96906	25	10	MS28778-2	96906	17	6
MS28776-2	96906	100	54	MS28778-2	96906	85B	23
MS28776-20	96906	164		MS28778-20	96906	74	
MS28776-21		KITS		MS28778-20	96906	75	
MS28776-37	96906	162	65	MS28778-3		KITS	

REFERENCE NUMBER	MFG CODE	FIG NUMBER	ITEM NUMBER	REFERENCE NUMBER	MFG CODE	FIG NUMBER	ITEM NUMBER
MS28778-3	96906	28	3	MS28778-8		KITS	
MS28778-3	96906	30	27	MS28778-8		KITS	
MS28778-32	96906	BULK		MS28778-8	96906	32	
MS28778-4		KITS		MS28778-8	96906	32	100
MS28778-4	96906	11		MS28778-8	96906	32	158
MS28778-4	96906	17	17	MS28778-8	96906	32	31
MS28778-4	96906	17	23	MS28778-8	96906	32	57
MS28778-4	96906	31	17	MS28778-8	96906	32	59
MS28778-4	96906	31	27	MS28778-8	96906	32	98
MS28778-4	96906	31	3	MS28778-8	96906	33	
MS28778-4	96906	31	6	MS28778-8	96906	35	
MS28778-4	96906	32		MS28778-8	96906	35	28
MS28778-4	96906	32	204	MS28778-8	96906	76	54
MS28778-4	96906	32	208	MS28778-8	96906	85	
MS28778-4	96906	32	210	MS28778-8	96906	96	126
MS28778-4	96906	32	41	MS28778-8	96906	96	128
MS28778-4	96906	32	45	MS28778-8	96906	96	130
MS28778-4	96906	33		MS28778-8	96906	103	25
MS28778-4	96906	34	4	MS28778-8	96906	103	30
MS28778-4	96906	54		MS28778-8	96906	103	38
MS28778-4	96906	54	23	MS28778-8	96906	106	126
MS28778-4	96906	54	47	MS28778-8	96906	144	
MS28778-4	96906	77	13	MS28778-8	96906	144	
MS28778-4	96906	85		MS28778-8	96906	144	
MS28778-4	96906	97	6	MS28778-8	96906	144	
MS28778-4	96906	100	63	MS28778-8	96906	145	
MS28778-4	96906	106	38	MS28778-8	96906	145	
MS28778-4	96906	144		MS28778-8	96906	147	
MS28778-4	96906	144		MS28778-8	96906	148	
MS28778-4	96906	144		MS28778-8	96906	155	18
MS28778-4	96906	144		MS28778-8	96906	158	4
MS28778-4	96906	144		MS28778-8	96906	162	28
MS28778-4	96906	144		MS28778-8	96906	35A	32
MS28778-4	96906	144		MS28778-8	96906	35A	35
MS28778-4	96906	144		MS28778-8	96906	84A	19
MS28778-4	96906	145		MS28778-8	96906	84A	24
MS28778-4	96906	145	157	MS28778-8	96906	162A	19
MS28778-4	96906	147		MS28778B3		KITS	
MS28778-4	96906	148		MS28782-10	96906	96	109
MS28778-4	96906	149	32	MS28782-10	96906	96	111
MS28778-4	96906	162	10	MS28782-10	96906	100	23
MS28778-4	96906	162	14	MS28782-10	96906	100	24
MS28778-4	96906	162	25	MS28782-10	96906	100	29
MS28778-4	96906	165	9	MS28782-10	96906	106	76
MS28778-4	96906	167	17	MS28782-10	96906	106	81
MS28778-4	96906	181		MS28782-10	96906	106	82
MS28778-4	96906	84A		MS28782-11	96906	97	51
MS28778-5		KITS		MS28782-11	96906	100	36
MS28778-5	96906	34	2	MS28782-11	96906	100	38
MS28778-5	96906	149	34	MS28782-11	96906	100	57
MS28778-5	96906	125A	38	MS28782-11	96906	100	58
MS28778-6		KITS		MS28782-12	96906	96	141
MS28778-6	96906	17	10	MS28782-12	96906	96	143
MS28778-6	96906	25		MS28782-12	96906	96	97
MS28778-6	96906	32		MS28782-12	96906	96	99
MS28778-6	96906	33		MS28782-12	96906	103	14
MS28778-6	96906	34	6	MS28782-12	96906	103	15
MS28778-6	96906	74		MS28782-13	96906	106	138
MS28778-6	96906	75	29	MS28782-13	96906	106	96
MS28778-6	96906	76	31	MS28782-13	96906	106	97
MS28778-6	96906	76	70	MS28782-13	96906	BULK	
MS28778-6	96906	103	1	MS28782-14		KITS	
MS28778-6	96906	123	72	MS28782-15	96906	103	8
MS28778-6	96906	147		MS28782-16	96906	17	29
MS28778-6	96906	148		MS28782-16	96906	17	31
MS28778-6	96906	149	7	MS28782-16	96906	92	17
MS28778-6	96906	157		MS28782-16	96906	92	18
MS28778-6	96906	158		MS28782-16	96906	92	8
MS28778-6	96906	173		MS28782-16	96906	92	9
MS28778-6	96906	181		MS28782-16	96906	96	114
MS28778-6	96906	85B	21	MS28782-16	96906	96	116

REFERENCE NUMBER	MFG CODE	FIG NUMBER	ITEM NUMBER	REFERENCE NUMBER	MFG CODE	FIG NUMBER	TEM NUMBER
MS28782-16	96906	96	117	MS29513-006	96906	113E	128
MS28782-17	96906	97	36	MS29513-008		KITS	
MS28782-17	96906	97	39	MS29513-008	96906	79A	31
MS28782-17	96906	97	41	MS29513-008	96906	81A	17
MS28782-17	96906	97	44	MS29513-009	96906	79A	17
MS28782-17	96906	97	46	MS29513-010	96906	79A	3
MS28782-17	96906	97	49	MS29513-012		KITS	
MS28782-18	96906	100	49	MS29513-012	96906	79A	20
MS28782-18	96906	100	50	MS29513-012	96906	81A	5
MS28782-19	96906	100	34	MS29513-018	96906	79A	5
MS28782-19	96906	100	35	MS29513-10		KITS	
MS28782-19	96906	BULK		MS29513-112	88044	101	108
MS28782-2	96906	96		MS29513-112	96906	76B	11
MS28782-2	96906	103	19	MS29513-112	96906	81A	21
MS28782-2	96906	103	20	MS29513-112	96906	104A	32
MS28782-20	96906	96	105	MS29513-112	96906	114T	26
MS28782-20	96906	96	107	MS29513-114	96906	175C	26
MS28782-22	96906	BULK		MS29513-12		KITS	
MS28782-23	96906	92	11	MS29513-125	96906	124	83
MS28782-23	96906	92	12	MS29513-127		KITS	
MS28782-23	96906	BULK		MS29513-127	96906	175G	
MS28782-24	96906	96	100	MS29513-131		KITS	
MS28782-24	96906	96	102	MS29513-131	96906	79A	25
MS28782-26	96906	96	138	MS29513-131	96906	81A	10
MS28782-26	96906	96	140	MS29513-136		KITS	
MS28782-29	96906	BULK		MS29513-136	96906	81A	24
MS28782-32	96906	166	11	MS29513-139		KITS	
MS28782-32	96906	BULK		MS29513-139	96906	79A	41
MS28782-33	96906	BULK		MS29513-18		KITS	
MS28782-37	96906	164	11	MS29513-217	96906	175C	39
MS28782-37	96906	BULK		MS29513-218	96906	175C	25
MS28782-5	96906	96		MS29513-219		KITS	
MS28782-5	96906	103	52	MS29513-219	96906	123A	8
MS28782-6	96906	96	121	MS29513-22	96906	77	
MS28782-6	96906	96	123	MS29513-22	96906	78	11
MS28782-7	96906	103	49	MS29513-22	96906	78	20
MS28782-9	96906	103	10	MS29513-22	96906	78	5
MS28782-9	96906	103	23	MS29513-22	96906	78	8
MS28783-11	96906	164	8	MS29513-22	96906	79	159
MS28783-2	96906	85	26E	MS29513-22	96906	80	
MS28783-6	96906	166	8	MS29513-22	96906	80	103
MS28783-6	96906	BULK		MS29513-22	96906	81	
MS28784-224	96906	85	26D	MS29513-22	96906	81	86
MS28788-8	96906	144		MS29513-22	96906	124	
MS28889-1	96906	164	2	MS29513-22	96906	124	44
MS28889-1	96906	165	6	MS29513-22	96906	124	56
MS28932-1	96906	92	6	MS29513-227	96906	123A	42
MS28932-1	96906	106	101	MS29513-233	96906	17	34
MS28932-1	96906	106	139	MS29513-27	96906	175F	11
MS28932-1	96906	106	91	MS29513-8		KITS	
MS28932-1	96906	BULK		MS29513-9		KITS	
MS29512-02	96906	79A	11	MS29561-012	96906	BULK	
MS29512-04	96906	124	40	MS29561-236	96906	16	55
MS29512-12	96906	79		MS29561-243	96906	151	24
MS29512-12	96906	79	172	MS29561-243	96906	BULK	
MS29512-12	96906	79	64	MS29561-245	96906	178	
MS29512-12	96906	80	113	MS29561-261		KITS	
MS29512-12	96906	80	96	MS29561-261	96906	34	25
MS29512-12	96906	81	79	MS29561-261	96906	149	21
MS29512-12	96906	81	96	MS29561-261	96906	149	25
MS29512-16	96906	77	41	MS29561-329	96906	178	
MS29512-16	96906	77	46	MS29561-343	96906	178	
MS29512-16	96906	79	167	MS29586-1	96906	175	2
MS29512-16	96906	80	105	MS3057-6A	96906	122	1
MS29512-16	96906	81	88	MS3100K14S7S	96906	128	19
MS29512-2		KITS		MS3100K24-28P	96906	131	
MS29512-3	96906	78	18	MS3100K24-7P	96906	131	
MS29512-6	96906	77		MS3100K28-21P	96906	131	
MS29512-8	96906	80		MS3100R16S1S	96906	BULK	
MS29512-8	96906	81		MS3102E14S9P	96906	90A	46
MS29513-006	96906	113E	104	MS3102R10SL3P	96906	44C	27

REFERENCE NUMBER	MFG CODE	FIG NUMBER	ITEM NUMBER	REFERENCE NUMBER	MFG CODE	FIG NUMBER	ITEM NUMBER
MS3102R10SL3P	96906	113E	12	MS35190-258	96906	90A	8
MS3102R10SL3P	96906	114J	33	MS35190-271	96906	125A	8
MS3102R10SL3P	96906	123A	9	MS35190-275	96906	BULK	
MS3102R20-15SC	96906	76		MS35190-28	96906	134	2
MS3106A10SL4S	96906	125	23	MS35190-28	96906	BULK	
MS3106R14S5P	96906	BULK		MS35190-292	96906	BULK	
MS3106R14S5S	96906	137		MS35191-243	96906	BULK	
MS3106R14S7P	96906	BULK		MS35191-273	96906	115	
MS3106R14S7S	96906	180	4	MS35191-274	96906	105	40
MS3106R14S7S	96906	BULK		MS35191-275	96906	138	
MS3106R16-9S	96906	BULK		MS35191-276	96906	185	3
MS3106R16S4S	96906	BULK		MS35191-276	96906	BULK	
MS3106R16S8S	96906	BULK		MS35198-4	96906	114E	104
MS3106R20-27P	96906	87	15	MS35198-4	96906	114G	115
MS3106R20-27P	96906	87	32	MS35198-4	96906	114H	110
MS3106R20-27S	96906	BULK		MS35198-4	96906	114J	95
MS3106R20-29S	96906	BULK		MS35202-14	96906	113	
MS3106R8S1S	96906	139	46	MS35202-14	96906	114	
MS3108E20-27P	96906	180	8	MS35202-31	96906	113	
MS3108R10SL3S	96906	85		MS35202-31	96906	114	
MS3108R12S3S	96906	180		MS35202-46	96906	BULK	
MS3108R12S5S	96906	25		MS35206	88044	132	
MS3108R14S5S	96906	BULK		MS35206-207	96906	128A	126
MS3108R14S7P	96906	180	1	MS35206-213	96906	128A	118
MS3108R18-4S	96906	BULK		MS35206-213	96906	128A	134
MS3108R20-27P	96906	BULK		MS35206-213	96906	128A	147
MS3108R32-3P	96906	BULK		MS35206-213	96906	128A	48
MS3108R8S1S	96906	138	53	MS35206-215	96906	128	
MS35043-143	96906	113B	79	MS35206-215	96906	128	15
MS35043-203	96906	113B	38	MS35206-215	96906	129	
MS35043-203	96906	113B	41	MS35206-215	96906	139	
MS35043-226	96906	113B	44	MS35206-215	96906	128A	102
MS35058-21	96906	BULK		MS35206-215	96906	128A	113
MS35058-22	96906	113	2	MS35206-215	96906	128A	171
MS35058-22	96906	114	14	MS35206-215	96906	128A	77
MS35058-22	96906	130	32	MS35206-217	96906	75	
MS35058-22	96906	130	34	MS35206-217	96906	128	
MS35058-22	96906	130	38	MS35206-217	96906	131	
MS35058-22	96906	130	45	MS35206-217	96906	131	
MS35058-22	96906	131	14	MS35206-217	96906	131	
MS35058-22	96906	131	36	MS35206-217	96906	132	
MS35058-22	96906	131	8	MS35206-217	96906	132	
MS35058-22	96906	132	20	MS35206-217	96906	132	
MS35058-22	96906	132	50	MS35206-217	96906	132	
MS35058-22	96906	135	8	MS35206-217	96906	132	
MS35058-22	96906	135	9	MS35206-217	96906	132	7
MS35058-23	96906	BULK		MS35206-217	96906	134	13
MS35058-24	96906	130	39	MS35206-217	96906	139	
MS35058-24	96906	131		MS35206-217	96906	128A	141
MS35058-27	96906	131	39	MS35206-219	96906	67	2
MS35058-27	96906	132	57	MS35206-219	96906	67	5
MS35058-28	96906	130	37	MS35206-219	96906	132	
MS35058-28	96906	135	18	MS35206-221	96906	128A	130
MS35058-30	96906	135	14	MS35206-222	96906	41	95
MS35059-21	96906	130	33	MS35206-226	88044	162	21
MS35059-21	96906	130	46	MS35206-226	96906	123A	23
MS35059-21	96906	135	15	MS35206-226	96906	123A	26
MS35059-22	96906	131	26	MS35206-228	96906	11	7
MS35059-22	96906	132	12	MS35206-228	96906	77	18
MS35059-22	96906	BULK		MS35206-228	96906	77	21
MS35059-23	96906	130	31	MS35206-228	88044	77	24
MS35059-26	96906	130	42	MS35206-228	96906	118	106
MS35059-26	96906	131	40	MS35206-228	96906	118	114
MS35059-26	96906	132	56	MS35206-228	96906	118	130
MS35059-31	96906	135	7	MS35206-228	96906	118	135
MS35168-88E	96906	BULK		MS35206-228	96906	118	25
MS35190-213	96906	113B	28	MS35206-228	96906	118	30
MS35190-249	96906	BULK		MS35206-228	96906	118	35
MS35190-251	96906	BULK		MS35206-228	96906	118	84
MS35190-254	96906	BULK		MS35206-228	96906	135	17
MS35190-256	96906	BULK		MS35206-228	96906	138	

REFERENCE NUMBER	MFG CODE	FIG NUMBER	ITEM NUMBER	REFERENCE NUMBER	MFG CODE	FIG NUMBER	ITEM NUMBER
MS35206-228	96906	79A	65	MS35207-264	96906	79	85
MS35206-228	96906	81A	43	MS35207-264	96906	122	8
MS35206-228	96906	128A	24	MS35207-264	96906	132	91
MS35206-230	96906	130	21	MS35207-264	96906	162	19
MS35206-230	96906	130	72	MS35207-264	96906	162	5
MS35206-230	96906	131	47	MS35207-264	96906	162	8
MS35206-230	96906	131	5	MS35207-264	96906	165	4
MS35206-230	96906	132	25	MS35207-264	96906	BULK	
MS35206-230	96906	132	71	MS35207-265	96906	59	4
MS35206-230	96906	132	84	MS35207-265	96906	138	
MS35206-230	96906	138		MS35207-265	96906	144	127
MS35206-230	96906	139		MS35207-266	96906	BULK	
MS35206-231	88044	133	15	MS35207-268	96906	114	
MS35206-234	96906	139	38	MS35207-270	96906	124	77
MS35206-234	96906	138		MS35214	96906	44C	40
MS35206-243	96906	146	2	MS35214-1	96906	114E	112
MS35206-243	96906	146	6	MS35214-1	96906	114E	18
MS35206-243	96906	176	10	MS35214-1	96906	114F	13
MS35206-243	96906	BULK		MS35214-1	96906	114F	52
MS35206-245	96906	57	2	MS35214-1	96906	114G	
MS35206-245	96906	101	102	MS35214-1	96906	114G	11
MS35206-245	96906	101	62	MS35214-1	96906	114H	13
MS35206-245	96906	118	162	MS35214-1	96906	114J	10
MS35206-245	96906	123	92	MS35214-16	96906	BULK	
MS35206-245	96906	123	94	MS35214-2	96906	114E	17
MS35206-245	96906	123	96	MS35214-2	96906	114F	12
MS35206-245	96906	123	98	MS35214-2	96906	114G	10
MS35206-245	96906	138		MS35214-2	96906	114H	12
MS35206-245	96906	140	4	MS35214-2	96906	114J	9
MS35206-245	96906	154	232	MS35214-23	96906	47	13
MS35206-246	96906	108	13	MS35214-23	96906	79A	
MS35206-246	96906	115	11	MS35214-23	96906	79A	52
MS35206-246	96906	115	9	MS35214-23	96906	81A	45
MS35206-246	96906	48	2	MS35214-23	96906	BULK	
MS35206-246	96906	101	100	MS35214-31	96906	114H	1
MS35206-246	96906	102	31	MS35214-31	96906	114J	1
MS35206-247	96906	77	16	MS35214-5	96906	114E	67
MS35206-247	88044	101	64	MS35214-5	96906	114F	107
MS35206-247	96906	108	11	MS35214-5	96906	114F	109
MS35206-247	96906	133	2	MS35214-5	96906	114G	85
MS35206-247	96906	170	22	MS35214-5	96906	114G	95
MS35206-247	96906	170	30	MS35214-5	96906	114H	85
MS35206-248	96906	BULK		MS35214-5	96906	114H	93
MS35206-249	96906	41		MS35214-5	96906	114J	71
MS35206-249	96906	104	14	MS35214-5	96906	114J	78
MS35206-249	96906	104	44	MS35214-55	96906	BULK	
MS35206-250	96906	BULK		MS35214-59	96906	BULK	
MS35206-253	96906	132	69	MS35214-73	96906	123B	15
MS35206-253	96906	BULK		MS35219-55	96906	50	
MS35206-261	96906	138		MS35219-55	96906	76	41
MS35206-261	96906	139		MS35219-55	96906	85	43
MS35206-264	96906	138		MS35219-55	96906	BULK	
MS35206-317	24617	76		MS35219-56	96906	50	248
MS35207-204	96906	122	57	MS35219-56	96906	120	16
MS35207-226	96906	32	189	MS35219-56	96906	176	61
MS35207-243	96906	175D	35	MS35219-56	96906	176	64
MS35207-261	96906	104	74	MS35219-56	96906	176	70
MS35207-261	96906	123	69	MS35219-57	96906	132	67
MS35207-261	96906	84A	20	MS35219-57	96906	BULK	
MS35207-261	96906	84B	22	MS35219-58	96906	BULK	
MS35207-261	96906	BULK		MS35219-59	96906	BULK	
MS35207-261	96906	162A	15	MS35219-60	96906	113	
MS35207-263	96906	74		MS35219-60	96906	114	
MS35207-263	96906	75		MS35219-65	96906	82	61
MS35207-263	96906	77	48	MS35219-69	96906	BULK	
MS35207-263	96906	123	4	MS35225-64	96906	138	
MS35207-263	96906	124	82	MS35225-64	96906	139	
MS35207-263	96906	138		MS35245-9	96906	114F	41
MS35207-263	96906	141	23	MS35265-12	96906	123B	30
MS35207-264	96906	122	6	MS35265-15	96906	123A	10
MS35207-264	96906	75	2	MS35265-25	96906	81A	28

REFERENCE NUMBER	MFG CODE	FIG NUMBER	ITEM NUMBER
MS35265-38	96906	106	2
MS35265-44	96906	213A	5
MS35265-47	96906	90A	9
MS35265-47	96906	175D	58
MS35265-51	96906	58	6
MS35265-70	96906	175C	2
MS35265-77	96906	25	12
MS35265-77	96906	124	80
MS35266-34	96906	11D	19
MS35266-59	96906	162A	21
MS35266-64	96906	11D	2
MS35266-68	96906	BULK	
MS35266-70	96906	BULK	
MS35266-73	96906	94	4
MS35266-73	96906	106	1
MS35266-73	96906	BULK	
MS35266-75	96906	144	143
MS35266-75	96906	BULK	
MS35267-2	96906	113B	5
MS35273-12	96906	114E	38
MS35273-12	96906	114G	32
MS35273-12	96906	114H	33
MS35273-12	96906	114J	25
MS35273-27	96906	114E	13
MS35273-27	96906	114G	39
MS35273-27	96906	114H	42
MS35274-60	96906	BULK	
MS35275-245	96906	85B	16
MS35275-245	96906	214A	116
MS35275-245	96906	214A	130
MS35275-245	96906	214A	266
MS35275-245	96906	214A	289
MS35275-246	96906	175H	24
MS35275-261	96906	214A	477
MS35275-263	96906	BULK	
MS35275-264	96906	214A	448
MS35275-264	96906	214A	521
MS35275-264	96906	214A	526
MS35275-63	96906	BULK	
MS35276-264	96906	212A	112
MS35277-41	96906	76B	20
MS35333-35	96906	112	
MS35333-35	96906	113F	32
MS35333-35	96906	114E	35
MS35333-35	96906	114F	31
MS35333-35	96906	128A	127
MS35333-35	96906	128A	62
MS35333-35	96906	128A	75
MS35333-35	96906	128A	99
MS35333-39	96906	138	
MS35333-39	96906	123A	47
MS35336-9	96906	128A	122
MS35337-100	96906	79	
MS35337-100	96906	175A	31
MS35337-103	96906	175A	103
MS35337-39	96906	113B	112
MS35337-39	96906	113B	17
MS35337-39	96906	113B	40
MS35337-39	96906	113E	221
MS35337-39	96906	113E	247
MS35337-39	96906	113E	82
MS35337-39	96906	113E	98
MS35337-39	96906	114E	113
MS35337-39	96906	114E	80
MS35337-39	96906	114E	96
MS35337-39	96906	114F	53
MS35337-39	96906	114F	65
MS35337-39	96906	114F	96
MS35337-39	96906	114G	
MS35337-39	96906	114G	109
MS35337-39	96906	114G	122
MS35337-39	96906	114G	74
MS35337-39	96906	114H	105
MS35337-39	96906	114H	74
MS35337-39	96906	114J	60
MS35337-39	96906	114J	90
MS35337-40	96906	113B	24
MS35337-40	96906	113E	214
MS35337-40	96906	114E	14
MS35337-40	96906	114E	29
MS35337-40	96906	114E	39
MS35337-40	96906	114E	42
MS35337-40	96906	114E	55
MS35337-40	96906	114E	83
MS35337-40	96906	114F	104
MS35337-40	96906	114F	35
MS35337-40	96906	114F	68
MS35337-40	96906	114F	71
MS35337-40	96906	114G	27
MS35337-40	96906	114G	33
MS35337-40	96906	114G	45
MS35337-40	96906	114G	59
MS35337-40	96906	114G	6
MS35337-40	96906	114G	65
MS35337-40	96906	114G	77
MS35337-40	96906	114H	34
MS35337-40	96906	114H	39
MS35337-40	96906	114H	59
MS35337-40	96906	114H	65
MS35337-40	96906	114H	7
MS35337-40	96906	114H	77
MS35337-40	96906	114J	26
MS35337-40	96906	114J	31
MS35337-40	96906	114J	34
MS35337-40	96906	114J	46
MS35337-40	96906	114J	5
MS35337-40	96906	114J	52
MS35337-40	96906	114J	63
MS35337-40	96906	114R	20
MS35337-40	96906	123B	31
MS35337-40	96906	128A	110
MS35337-40	96906	128A	114
MS35337-40	96906	128A	172
MS35337-40	96906	128A	174
MS35337-43		KITS	
MS35337-43	96906	18	
MS35337-43	96906	11D	17
MS35337-43	96906	11D	20
MS35337-43	96906	11D	29
MS35337-43	96906	11D	38
MS35337-43	96906	11D	49
MS35337-43	96906	11D	53
MS35337-43	96906	123B	9
MS35337-43	96906	212A	109
MS35337-43	96906	212A	113
MS35337-43	96906	212A	116
MS35337-43	96906	212A	142
MS35337-43	96906	212A	157
MS35337-43	96906	212A	168
MS35337-43	96906	212A	178
MS35337-43	96906	212A	181
MS35337-43	96906	212A	210
MS35337-43	96906	212A	216
MS35337-43	96906	212A	83
MS35337-43	96906	212A	86
MS35337-43	96906	213B	4
MS35337-43	96906	214A	109
MS35337-43	96906	214A	275
MS35337-44	96906	190	55
MS35337-44	96906	191	23

REFERENCE NUMBER	MFG CODE	FIG NUMBER	ITEM NUMBER
MS35337-44	96906	191	4
MS35337-44	96906	BULK	
MS35337-44	96906	113F	149
MS35337-44	96906	123B	14
MS35337-45	96906	213	10
MS35337-45	96906	212A	17
MS35337-47	96906	212A	127
MS35337-78	96906	113A	13
MS35337-78	96906	113A	28
MS35337-78	96906	113A	5
MS35337-78	96906	114R	3
MS35337-81	96906	214A	449
MS35337-97	96906	BULK	
MS35338-100	96906	79	
MS35338-100	96906	80	
MS35338-100	96906	81	
MS35338-102	96906	198	23
MS35338-141	96906	BULK	
MS35338-39	96906	113F	100
MS35338-39	96906	113F	110
MS35338-39	96906	113F	113
MS35338-39	96906	113F	176
MS35338-39	96906	113F	180
MS35338-39	96906	113F	212
MS35338-39	96906	113F	218
MS35338-39	96906	113F	91
MS35338-39	96906	114G	35
MS35338-40	96906	113F	159
MS35338-40	96906	113F	45
MS35338-40	96906	128A	119
MS35338-40	96906	128A	131
MS35338-40	96906	128A	135
MS35338-40	96906	128A	138
MS35338-40	96906	128A	142
MS35338-40	96906	128A	148
MS35338-40	96906	128A	49
MS35338-41	96906	133	
MS35338-41	96906	81A	37
MS35338-41	96906	81A	46
MS35338-41	96906	114F	29
MS35338-41	96906	114G	40
MS35338-41	96906	114H	29
MS35338-41	96906	114H	43
MS35338-41	96906	114J	23
MS35338-41	96906	123A	24
MS35338-41	96906	123A	27
MS35338-41	96906	123A	35
MS35338-41	96906	128A	151
MS35338-41	96906	128A	156
MS35338-41	96906	128A	19
MS35338-41	96906	128A	30
MS35338-41	96906	128A	44
MS35338-41	96906	128A	53
MS35338-41	96906	128A	78
MS35338-41	96906	128A	81
MS35338-41	96906	128A	96
MS35338-41	96906	212A	120
MS35338-41	96906	212A	192
MS35338-41	96906	212A	49
MS35338-41	96906	212A	8
MS35338-41	96906	212A	94
MS35338-41	96906	212A	97
MS35338-42	96906	39	
MS35338-42	96906	41	
MS35338-42	96906	11D	34
MS35338-42	96906	132	
MS35338-42	96906	113F	154
MS35338-42	96906	123B	25
MS35338-42	96906	128A	14

REFERENCE NUMBER	MFG CODE	FIG NUMBER	ITEM NUMBER
MS35338-42	96906	128A	25
MS35338-42	96906	175A	98
MS35338-42	96906	212A	11
MS35338-42	96906	212A	124
MS35338-42	96906	212A	13
MS35338-42	96906	212A	165
MS35338-42	96906	212A	175
MS35338-42	96906	212A	189
MS35338-42	96906	212A	25
MS35338-42	96906	212A	46
MS35338-42	96906	212A	62
MS35338-42	96906	212A	72
MS35338-42	96906	213A	6
MS35338-42	96906	214A	548
MS35338-45	96906	212A	197
MS35338-45	96906	194	14
MS35338-45	96906	195	3
MS35338-45	96906	162B	3
MS35338-46	96906	175D	50
MS35338-46	96906	212A	206
MS35338-5		KITS	
MS35338-79	96906	44C	16
MS35338-98	96906	77	
MS35338-99	96906	BULK	
MS35338-99	96906	175A	20
MS35426-1	96906	96	63
MS35426-14	96906	78	
MS35426-14	96906	BULK	
MS35426-15	96906	BULK	
MS35489-11	96906	BULK	
MS35489-12	96906	BULK	
MS35489-13	96906	BULK	
MS35489-14	96906	BULK	
MS35489-15	96906	BULK	
MS35489-16	96906	BULK	
MS35489-17	96906	129	29
MS35489-19	96906	32	197
MS35489-2	96906	123B	16
MS35489-20	96906	138	25
MS35489-20	96906	BULK	
MS35489-22	96906	BULK	
MS35489-23	96906	132	111
MS35489-23	96906	138	26
MS35489-23	96906	BULK	
MS35489-27	96906	138	16
MS35489-27	96906	BULK	
MS35489-4	96906	128	12
MS35489-4	96906	128A	105
MS35489-5	96906	109	16
MS35489-6	96906	128	13
MS35489-6	96906	170	10
MS35489-6	96906	191	24
MS35489-6	96906	191	5
MS35489-6	96906	194	3
MS35489-7	96906	BULK	
MS35489-74	96906	BULK	
MS35492-118	96906	BULK	
MS35522-1	96906	MSUP	
MS35522-2	96906	MSUP	
MS35522-4	96906	MSUP	
MS35522-5	96906	MSUP	
MS35522-6	96906	MSUP	
MS35542-1	96906	MSUP	
MS35542-2	96906	MSUP	
MS35542-4	96906	MSUP	
MS35542-6	96906	MSUP	
MS35542-7	96906	MSUP	
MS35542-8	96906	MSUP	
MS35550-10	96906	MSUP	
MS35550-2	96906	MSUP	

REFERENCE NUMBER	MFG CODE	FIG NUMBER	ITEM NUMBER	REFERENCE NUMBER	MFG CODE	FIG NUMBER	ITEM NUMBER
MS35550-6	96906	MSUP		MS63040-6	96906	84	
MS35550-7	96906	MSUP		MS87014	96906	165	28
MS35637-1	96906	MSUP		MS90077-3-1	96906	137	
MS35649-22	96906	BULK		MS90082-1	96906	138	47
MS35649-25	96906	113B	39	MS9011-01		KITS	
MS35649-42	96906	113B	23	MS9013-02	96906	194	11
MS35650-22	96906	BULK		MS9013-16		KITS	
MS35650-24	96906	BULK		MS9013-19	96906	97	25
MS35650-24	96906	113E	151	MS9014-25		KITS	
MS35650-44	96906	113A	27	MS9015-01	96906	206	10
MS35650-86	96906	114P	28	MS9015-02	96906	184	25
MS35650-86	96906	114Q	12	MS9015-04	96906	206	48
MS35671-16	96906	BULK		MS9015-04	96906	79A	19
MS35671-16	96906	214A	121	MS9015-04	96906	125A	5
MS35672-2	96906	113A	18	MS9015-06	96906	200	16
MS35672-3	96906	113A	66	MS9015-07	96906	206	17
MS35690-511	96906	130		MS9020-08	96906	BULK	
MS35690-611	96906	132	125	MS9048-003		KITS	
MS35690-611	96906	132	128	MS9048-004		KITS	
MS35690-611	96906	132	130	MS9048-102	96906	25	
MS35690-611	96906	132	133	MS9134-01	96906	11	29
MS35727-21	96906	MSUP		MS9134-01	96906	208	14
MS35756-3	96906	BULK		MS9134-01	96906	175	7
MS35756-4	96906	107	91	MS9144-01	96906	174	19
MS35756-6	96906	83	24	MS91587-4	96906	131	58
MS35756-6	96906	84	29	MS91587-4	96906	132	66
MS35769-10	96906	BULK		MS9164-086	96906	186	
MS35769-11	96906	25	32	MS9164-086	96906	187	
MS35769-11	96906	31	36	MS9164-328	96906	184	37
MS35769-11	96906	31	38	MS9164-368	96906	184	
MS35769-11	96906	170	9	MS9164-388	96906	184	
MS35769-11	96906	174	2	MS9320-09	96906	82	
MS35769-11	96906	208	17	MS9320-09	96906	200	6
MS35769-21	96906	23	32	MS9320-10	96906	155	3
MS35769-35	96906	208	27	MS9320-10	96906	23	
MS35769-5	96906	184	26	MS9320-10	96906	36	7
MS35769-5	96906	206	9	MS9320-10	96906	82	
MS36043-3	96906	MSUP		MS9320-10	96906	151	
MS36047-5	96906	MSUP		MS9320-10	96906	155	
MS36053-6	96906	MSUP		MS9320-10	96906	179	23
MS45901-1	96906	128A	132	MS9320-10	96906	184	15
MS45901-4	96906	BULK		MS9320-10	96906	185	12
MS49005-2	96906	206		MS9320-10	96906	187	16
MS5007-50	96906	177	4	MS9320-10	96906	190	64
MS5008-50	96906	177	1	MS9320-10	96906	200	50
MS51017-35	96906	BULK		MS9320-10	96906	205	14
MS51957-12	96906	BULK		MS9320-10	96906	207	21
MS51957-45	88044	172	92	MS9320-10	96906	208	13
MS51958-67	96906	167	19	MS9320-10	96906	208	32
MS51958-67	96906	173	23	MS9320-10	96906	208	38
MS51958-67	96906	173	28	MS9320-10	96906	210	10
MS51958-67	96906	173	34	MS9320-10	96906	211	2
MS51959-11	96906	117	14	MS9320-10	96906	190A	33
MS51959-11	96906	117	38	MS9320-10	96906	202A	16
MS51959-11	96906	117	73	MS9320-11	96906	25	93
MS51959-11	96906	118		MS9320-11	96906	16	24
MS51959-11	96906	118	154	MS9320-11	96906	22	
MS51959-11	96906	118	54	MS9320-11	96906	25	
MS51959-11	96906	118	64	MS9320-11	96906	25	44
MS51963-21	96906	123B	37	MS9320-11	96906	36	12
MS51963-34	96906	104A	25	MS9320-11	96906	36	3
MS51963-34	96906	104A	5	MS9320-11	96906	82	
MS51963-34	96906	175C	23	MS9320-11	96906	155	39
MS51963-9	96906	114E	56	MS9320-11	96906	155	41
MS51963-9	96906	114E	90	MS9320-11	96906	184	10
MS51963-9	96906	114F	72	MS9320-11	96906	185	2
MS51963-9	96906	114F	90	MS9320-11	96906	190	
MS51963-9	96906	114G	55	MS9320-11	96906	190	66
MS51963-9	96906	114H	55	MS9320-11	96906	198	35
MS51963-9	96906	114J	42	MS9320-11	96906	205	20
MS51965-17	96906	104A	16	MS9320-11	96906	206	4

REFERENCE NUMBER	MFG CODE	FIG NUMBER	ITEM NUMBER	REFERENCE NUMBER	MFG CODE	FIG NUMBER	ITEM NUMBER
MS9320-11	96906	206	6	M5-120	79318	114H	81
MS9320-11	96906	207	20	M5-120	79318	114J	67
MS9320-11	96906	208	10	M5-121	79318	114J	54
MS9320-11	96906	208	3	M5-123	79318	114H	
MS9320-11	96906	209	3	M5-123	79318	114J	
MS9320-11	96906	209	7	M5-125-3	79318	114G	66
MS9320-12	96906	36	18	M5-125-3	79318	114H	66
MS9320-12	96906	103		M5-125-3	79318	114J	53
MS9320-12	96906	184	4	M5-127	79318	114G	
MS9320-12	96906	200	3	M5-127	79318	114H	86
MS9320-12	96906	206	56	M5-127	79318	114J	72
MS9320-12	96906	206	65	M5-128	79318	114H	
MS9320-12	96906	207	4	M5-128	79318	114J	
MS9320-12	96906	208	7	M5-128-1	79318	114G	
MS9320-13	96906	184		M5-129	79318	114H	94
MS9486-28	96906	206	26	M5-129	79318	114J	79
MS999-59470-9900	96906	178	51	M5-131	79318	114G	61
MT360-1	82805	123A	7	M5-131	79318	114H	61
MT361-1	82805	123A	4	M5-131	79318	114J	48
MX1034U	00050	MSUP		M5-134	79318	114H	95
MLLH27267-20Z	81349	76	17	M5-134-1	79318	114G	99
M1001	98810	114T	68	M5-134-1	79318	114J	80
M1006	98810	114T	41	M5-135	79318	114G	103
M1007	98810	114T	50	M5-135	79318	114G	93
M1056	98810	114T	13	M5A	79318	114G	
M1070	98810	114T	18	M5AC	79318	114G	
M1072	98810	114T	17	M5A12-1	79318	114G	
M1073	98810	114T	16	M5A13-1	79318	114G	
M1075	98810	114T	14	M5A14	79318	114G	
M1082	98810	114T	66	M5A16	79318	114G	83
M1255	98810	114T	53	M6E1CH34	81996	225	
M1310	98810	114T	74	M600-10D	77200	175F	37
M1359	98810	114T	63	M600-3A	77200	175F	14
M1363	98810	114T	37	M600-4C	77200	175F	36
M1365	98810	114T	29	M600-5	77200	175F	13
M1368	98810	114T	54	NAS 1526-8	80205	50	2
M16533TYPEG10	81349	114	24	NASU101B10A9B	80205	117	72
M1726	98810	114T	61	NAS1022N10		KITS	
M1749	98810	114T	35	NAS1030N3	80205	BULK	
M1791	98810	114T	33	NAS1030N4	80205	BULK	
M2040	98810	114T	1	NAS1031N3	80205	BULK	
M2045	98810	114T	8	NAS1033A4	80205	BULK	
M3093	98810	114T	27	NAS1033N4	80205	BULK	
M31073	98810	114T		NAS1080D6	80205	49	
M3253-2	81864	140	18	NAS1080D6	80205	49	83
M35338-42	96906	39		NAS1080D6	80205	50	
M35338-90	96906	132	121	NAS1080D6	80205	50	30
M4DS420-14C	02615	118	109	NAS1080D6	80205	50	37
M4DS420-14C	02615	118	117	NAS1080D6	80205	50	40
M400-13		KITS		NAS1080D6	80205	154	
M400-13	77200	175F	1	NAS1104-8	80205	41	122
M400-17		KITS		NAS1201B10A9B	80205	117	13
M400-17	77200	BULK		NAS1201B10A9B	80205	118	105
M400-17	77200	175F	2	NAS1201B10A9B	80205	118	113
M400-19		KITS		NAS1201B10A9B	80205	118	131
M400-21		KITS		NAS1201B10A9B	80205	118	136
M400-21G		KITS		NAS1201B10A9B	80205	118	153
M400-23		KITS		NAS1201B10A9B	80205	118	26
M400-24C		KITS		NAS1201B10A9B	80205	118	31
M400-25		KITS		NAS1201B10A9B	80205	118	36
M400-5C		KITS		NAS1201B10A9B	80205	118	53
M4000	98810	114T	78	NAS1201B10A9B	80205	118	
M4941A1A	18965	123	76	NAS1201B10A9B	80205	118	63
M5	79318	114J		NAS124Y125	80205	47	6A
M5	79318	114H		NAS1252-416L	80205	43	74B
M5-1B16	79318	114H	84	NAS1354DS7S08D	80205	117	12
M5-1B16	79318	114J	70	NAS1354DS7S08D	80205	117	36
M5-111	79318	114H		NAS1354DS7S08D	80205	117	71
M5-111	79318	114J		NAS1354DS7S08D	80205	118	152
M5-119	79318	114H	78	NAS1354DS7S08D	80205	118	52
M5-119	79318	114J	64	NAS1354DS7S08D	80205	118	62

REFERENCE NUMBER	MFG CODE	FIG NUMBER	ITEM NUMBER	REFERENCE NUMBER	MFG CODE	FIG NUMBER	ITEM NUMBER
NAS1354DS7S09D	80205	BULK		NAS42-5-128	80205	BULK	
NAS1354DS7S14D	80205	118	132	NAS42DD5-128	80205	BULK	
NAS1354DS7S14D	80205	118	32	NAS42DD6-68	80205	131	45
NAS1354DS7S14D	80205	118	86	NAS42DD6-68	80205	132	
NAS1356DS7S09D	80205	BULK		NAS427K12	80205	66	10
NAS143-4C		KITS		NAS427K13	80205	101	106
NAS143-6	80205	BULK		NAS427K13	80205	101	117
NAS144-16		KITS		NAS427K13	80205	101	53
NAS144ADH18	80205	BULK		NAS427K13	80205	101	56
NAS144A18		KITS		NAS427K13	80205	101	68
NAS144A18	80205	26	5	NAS427K13	80205	101	75
NAS1465-5	80205	BULK		NAS427K13	80205	101	91
NAS1466-14	80205	BULK		NAS427K13	80205	101	94
NAS1466-4	80205	41	139	NAS427K13	80205	152	17
NAS1466-4	80205	49		NAS427K13	80205	152	24
NAS1466-4	80205	52	8	NAS427K14	80205	101	116
NAS1466-4	80205	BULK		NAS427K15	80205	101	115
NAS1468-5	80205	BULK		NAS427K17	80205	66	1
NAS1468-7	80205	BULK		NAS427K22	80205	56	29
NAS1526-10	80205	BULK		NAS427K22	80205	66	2
NAS1526-16	80205	BULK		NAS427K24	80205	56	104
NAS1526-3	80205	BULK		NAS427K25	80205	60	6
NAS1526-4	80205	154	122	NAS427K27	80205	65	4
NAS1526-8	80205	49	62	NAS427K40	80205	56	27
NAS1526-8	80205	49	65	NAS427K40	80205	60	5
NAS1526-9	80205	BULK		NAS427K40	80205	67	17
NAS1530-10	80205	50	1	NAS427K9	80205	66	9
NAS1669-3-3	80205	154		NAS427K9	80205	152	2
NAS1669-3-3	80205	BULK		NAS427K9	80205	152	3
NAS1669-3K13	80205	154		NAS427K9	80205	152	4
NAS1669-3K6	80205	154		NAS427T21	80205	56	28
NAS1669-3K7	80205	154		NAS427W19	80205	56	105
NAS1670-4K8	80205	BULK		NAS427W19	80205	56	23
NAS1689-3-4	80205	154		NAS428-4-14	80205	101	27
NAS179-4	80205	BULK		NAS428H4-12	80205	BULK	
NAS179-6	80205	41		NAS428H4-6	80205	51	27
NAS179-6	80205	51		NAS428H4-6	80205	BULK	
NAS179-6	80205	52		NAS428H4-6	80205	52	48B
NAS2-101		KITS		NAS43-3-12	80205	146	8
NAS2-101	80205	12		NAS43-3-22	80205	124	78
NAS2-101A		KITS		NAS43-4-192	80205	12	34
NAS2-201		KITS		NAS43-4-192	80205	108	6
NAS302-22-300	80205	182		NAS43-4-53	80205	70	7
NAS302-27-3380	80205	108	33	NAS43-4-6		KITS	
NAS302-36-1152	80205	152	6	NAS43DD0-3	80205	105	
NAS303-22-0254	80205	182	2	NAS43DD10-16	80205	129	23
NAS303-22-201	80205	182	16	NAS43DD3-12	80205	85	44
NAS303-67-0364	80205	56	18	NAS43DD3-128	80205	130	10
NAS304-27-0272	80205	44	47	NAS43DD3-128	80205	147	29
NAS304-36-0272	80205	44	48	NAS43DD3-128	80205	BULK	
NAS305-25-0662	80205	BULK		NAS43DD3-16	80205	101	13
NAS305-27-0480	80205	BULK		NAS43DD3-20	80205	43	68
NAS305-27-1446	80205	153	2	NAS43DD3-20	80205	56	
NAS305-33-0201	80205	45	4	NAS43DD3-206	80205	169	22
NAS305-36-1301	80205	101	130	NAS43DD3-23	80205	79	132
NAS305-37-1716	80205	101	105	NAS43DD3-28	80205	132	41
NAS305-37-1756	80205	101	67	NAS43DD3-28	80205	132	42
NAS305-66-1533	80205	101	90	NAS43DD3-32	80205	80	
NAS313C16-0312	80205	57	30	NAS43DD3-32	80205	81	
NAS313C16-0402	80205	57	29	NAS43DD3-40	80205	70	25
NAS313C17-0574	80205	58	13	NAS43DD3-44	80205	144	131
NAS313C17-0660	80205	58	14	NAS43DD3-44	80205	145	181
NAS313H16-0262	80205	57		NAS43DD3-44	80205	32	196
NAS313H16-0362	80205	57					
NAS313H17-0604	80205	58		NAS43DD3-62	80205	33	38
NAS313H17-0714	80205	58		NAS43DD3-88	80205	57	24
NAS335CP12	80205	BULK		NAS43DD4-11	80205	58	
NAS354-5-300	80205	BULK		NAS43DD4-12	80205	60	13
NAS354-5-580	80205	170	12	NAS43DD4-13	80205	59	
NAS395-6-3	80205	123		NAS43DD4-16	80205	56	44
NAS42-4-128	80205	BULK		NAS43DD4-16	80205	59	8

REFERENCE NUMBER	MFG CODE	FIG NUMBER	ITEM NUMBER	REFERENCE NUMBER	MFG CODE	FIG NUMBER	ITEM NUMBER
NAS43DD4-16	80205	61	14	NAS464-4-18	80205	159	32
NAS43DD4-16	80205	64	5	NAS464-4-18	80205	159	6
NAS43DD4-17	80205	169	65	NAS464-4-19	80205	BULK	
NAS43DD4-192	80205	BULK		NAS464-4-23	80205	88	9
NAS43DD4-20	80205	59	9	NAS464-4-24	80205	107	3
NAS43DD4-20	80205	60	14	NAS464-4-25	80205	56	25
NAS43DD4-20	80205	61	15	NAS464-4-29	80205	101	3
NAS43DD4-20	80205	61	5	NAS464-4-29	80205	101	6
NAS43DD4-21	80205	66	4	NAS464-4-3	80205	123	
NAS43DD4-22	80205	56	33	NAS464-4-32	80205	101	9
NAS43DD4-23	80205	169	77	NAS464-4-35	80205	159	36
NAS43DD4-26	80205	119	20	NAS464-4-39	80205	87	5
NAS43DD4-26	80205	119	25	NAS464-4-39	80205	88	33
NAS43DD4-26	80205	119	32	NAS464-4-59	80205	153	14
NAS43DD4-28	80205	59	7	NAS464-4A10	80205	91	3
NAS43DD4-37	80205	56	45	NAS464-4A11	80205	125	9
NAS43DD4-37	80205	129	36	NAS464-4A19	80205	BULK	
NAS43DD4-37	80205	129	37				
NAS43DD4-47	80205	169	63	NAS464-4A32	80205	97	9
NAS43DD4-51	80205	59		NAS464-4A4	80205	82	63
NAS43DD4-56	80205	169	76	NAS464-5-13	80205	BULK	
NAS43DD4-64	80205	85	9	NAS464-5-24	80205	87	164
NAS43DD4-9	80205	66	5	NAS464-5-24	80205	87	168
NAS43HT-128	80205	35	25	NAS464-5-25	80205	87	152
NAS43HTH-208	80205	70	9	NAS464-5-25	80205	102	20
NAS43HT3-12	80205	116	7	NAS464-5-25	80205	165	20
NAS43HT3-128	80205	49	43	NAS464-5-25	80205	BULK	
NAS43HT3-128	80205	124	16	NAS464-5-27	80205	165	12
NAS43HT3-14	80205	BULK		NAS464-5-29	80205	105	57
NAS437-5B	80205	123		NAS464-5-29	80205	165	23
NAS446-4-3	80205	123		NAS464-5-33	80205	153	10
NAS460-416		KITS		NAS464-5-35	80205	159	18
NAS460-416	80205	92	3	NAS464-5-35	80205	165	17
NAS464-3A10	80205	BULK		NAS464-5-37	80205	91	18
NAS464-3A4	80205	BULK		NAS464-5-41	80205	BULK	
NAS464-3A5	80205	BULK		NAS464-5-47	80205	91	42
NAS464-3A6	80205	BULK		NAS464-5-47	80205	BULK	
NAS464-3A9	80205	BULK		NAS464-5-51	80205	93	15
NAS464-4-13	80205	BULK		NAS464-5-55	80205	87	107
NAS464-4-14	80205	107	6	NAS464-5-69	80205	102	4
NAS464-4-15	80205	91	50	NAS464-5A13	80205	91	24
NAS464-4-15	80205	102	16	NAS464-5A41	80205	91	21
NAS464-4-17	80205	102	17	NAS464-5A59	80205	87	111
NAS464-4-18	80205	87	125	NAS464-6-28		KITS	
NAS464-4-18	80205	87	129	NAS464-6-28	80205	12	66
NAS464-4-18	80205	87	135	NAS464-6-33	80205	165	14
NAS464-4-18	80205	87	143	NAS464-6-34		KITS	
NAS464-4-18	80205	87	154	NAS464-6-34	80205	12	40
NAS464-4-18	80205	87	19	NAS464-6-45	80205	BULK	
NAS464-4-18	80205	87	25	NAS464-6-47	80205	93	33
NAS464-4-18	80205	87	41	NAS464-7-14		KITS	
NAS464-4-18	80205	87	47	NAS464-7-14	80205	BULK	
NAS464-4-18	80205	87	65	NAS464-7-15	80205	16	11
NAS464-4-18	80205	87	71	NAS464-7-16	80205	BULK	
NAS464-4-18	80205	87	99	NAS464-7-26	80205	163	3
NAS464-4-18	80205	88	3	NAS464-7-48		KITS	
NAS464-4-18	80205	88	4	NAS464-7-48	80205	13	1
NAS464-4-18	80205	91	14	NAS464-7-50	80205	BULK	
NAS464-4-18	80205	91	16	NAS464-7-52		KITS	
NAS464-4-18	80205	91	2	NAS464-7-52	80205	14	1
NAS464-4-18	80205	91	40	NAS464-7-65		KITS	
NAS464-4-18	80205	93	29	NAS464-7-65	80205	12	67
NAS464-4-18	80205	93	7	NAS464-7A36	80205	162	31
NAS464-4-18	80205	101	2	NAS464-8-20	80205	BULK	
NAS464-4-18	80205	101	5	NAS464-8-24	80205	BULK	
NAS464-4-18	80205	101	8	NAS464-8-32	80205	162	60
NAS464-4-18	80205	107	2	NAS464-8-72		KITS	
NAS464-4-18	80205	107	7	NAS464-8-72	80205	12	39
NAS464-4-18	80205	152	38	NAS464-9-55	80205	162	30
NAS464-4-18	80205	153	5	NAS464P4-20	80205	BULK	
NAS464-4-18	80205	159	14	NAS464P4A18	80205	87	113

REFERENCE NUMBER	MFG CODE	FIG NUMBER	ITEM NUMBER	REFERENCE NUMBER	MFG CODE	FIG NUMBER	ITEM NUMBER
NAS464P4A18	80205	159	2	NAS559-3	80205	100	47
NAS464P4A18	80205	159	7	NAS561C4-18	80205	17	25
NAS464P5A61	80205	163	8	NAS561P4-11	80205	17	
NAS464P6A28	80205	87	160	NAS561P4-11	80205	103	
NAS464P7-50	80205	162	49	NAS602-2-2	80205	175A	114
NAS464P7-50	80205	162	50	NAS620-10L	80205	115	
NAS481-13	80205	109		NAS626-10	80205	183	13
NAS50-131		KITS		NAS626-10	80205	183	2
NAS50-143		KITS		NAS626-10	80205	183	9
NAS50-150		KITS		NAS626-12	80205	183	11
NAS50-162		KITS		NAS626-20	80205	183	3
NAS50-306	80205	BULK		NAS627-48	80205	BULK	
NAS50-87		KITS		NAS634-48	80205	36	30
NAS501-4-17A	80205	159	11	NAS649-32L	80205	152	26
NAS505-4	80205	97	13	NAS669-137P		KITS	
NAS509-10		KITS		NAS669-137P	80205	162A	11
NAS509-10	80205	12	17	NAS75-3-003	80205	178	10
NAS509-4		KITS		NAS75-3-005	80205	42	
NAS509-4	80205	91	29	NAS75-5-022	80205	116	
NAS509-4	80205	100	19	NAS75-6-008	80205	BULK	
NAS509-5	80205	105		NAS76A4-119	80205	BULK	
NAS509-6	80205	96	41	NAS77-4-19	80205	152	13
NAS509-6	80205	96	83	NAS815-10A	80205	BULK	
NAS509-6	80205	98	10	NAS815-12A	80205	BULK	
NAS509-6	80205	98	23	NAS815-16A	80205	BULK	
NAS509-6	80205	99	7	NAS815-3A	80205	BULK	
NAS509-6	80205	106	114	NAS815-4A	80205	BULK	
NAS509-8		KITS		NAS815-5A	80205	BULK	
NAS509-8	80205	100	46	NAS815-6A	80205	BULK	
NAS51-106		KITS		NAS815-8A	80205	BULK	
NAS51-50	80205	102	2	NAS816-59		KITS	
NAS51-50	80205	107	76	NAS816-59	80205	79A	
NAS51-50	80205	107	86	NAS817-16		KITS	
NAS513-14	80205	105	22	NAS817-16	80205	79A	
NAS513-4	80205	91		NAS818-4		KITS	
NAS513-5	80205	105	19	NAS818-4	80205	KITS	
NAS513-5	80205	105	29	NAS818-4	80205	78	
NAS513-6	80205	96	42	NAS818-4	80205	79A	
NAS513-6	80205	96	84	NAS818-8	51663	KITS	
NAS513-6	80205	96	88	NK501-10-40	02615	145	187
NAS513-6	80205	106	115	NK525-10-10	02615	49	
NAS513-8	80205	BULK		NK525-10-8	02615	49	
NAS528A6	80205	49		NK525-10-9	02615	49	
NAS528A6	80205	154		NK525-10R6	02615	32	107
NAS528A8	80205	49		NK525-10R6	02615	35	
NAS529-6-5	80205	49		NK525D10-8	02615	43	53
NAS529-6-6	80205	49		NK526-1032-6	02615	145	156
NAS529-8-5	80205	49		NK526-1032-6	02615	145	159
NAS537-4-53	80205	BULK		NK526-1032-6	02615	145	171
NAS537-4P17	80205	88		NK526-632-5	83512	84A	4
NAS537-4P25	80205	158	32	NK526-632-5		KITS	
NAS537-4P26	80205	87		NMT62A0107	13184	A16	5
NAS537-4P26	80205	93	11	NP105390	97424	114P	27
NAS537-4P26	80205	93	16	NP173381	97424	114Q	
NAS537-4P26	80205	93	25	NP188175	97424	114Q	1
NAS537-4P26	80205	93	36	NP23	61349	113C	43
NAS537-4P26	80205	102	25	N3253-2	85812	141	31
NAS537-4P66	80205	101	34	N80P16018C6	03538	35	38
NAS537-5-75	80205	93		N80P16018C6	03538	114	
NAS537-6-50	80205	BULK		N80P16018C6	02342	140	42
NAS537-6P38	80205	93		N80P16022C6	03538	132	92
NAS538-4-20	80205	105	13	N80P16022C6	03538	132	93
NAS538-4P17	80205	93	12	PA904-1	70152	123	
NAS538-4P17	80205	93	17	PB1053-18		KITS	
NAS538-4P17	80205	93	26	PB1053-18	90166	181A	69
NAS538-4P17	80205	93	37	PB10877	19315	114S	93
NAS538-4P17	80205	102	23	PB1106-5	19315	114S	6
NAS538-4P17	80205	158	31	PB12017	19315	114S	92
NAS538-4P42	80205	153	21	PB12036	19315	114G	26
NAS538-4P49	80205	101	35	PB15071	19315	114S	74
NAS559-3		KITS		PB15072	19315	114S	73

REFERENCE NUMBER	MFG CODE	FIG NUMBER	ITEM NUMBER	REFERENCE NUMBER	MFG CODE	FIG NUMBER	ITEM NUMBER
PB15591	19315	114S	72	PB2791-3	19315	113E	
PB16537	19315	114S	29	PB2791-4	19315	113E	
PB16538	19315	114S	28	PB2791-5	19315	113E	
PB16539	19315	114S	27	PB2791-6	19315	113E	
PB16539	19315	114S	41	PB2791-7	19315	113E	
PB17618	19315	114S	68	PB2791-8	19315	113E	
PB17704	19315	114S	34	PB2791-9	19315	113E	
PB17705	19315	114S	44	PB29087-2	19315	113E	258
PB17707	19315	114S	69	PB3265	19315	114S	84
PB17761	19315	114S	15	PB32980-1	19315	113E	251
PB17761	19315	114S	57	PB33749-1	19315	113E	255
PB17848	19315	114S	18	PB33750-1	19315	113E	284
PB18121	19315	114S	14	PB3567	19315	114S	100
PB18358-2	19315	114S	94	PB36119-1	19315	113E	249
PB18960	19315	114S	46	PB37361	19315	113E	257
PB18962	19315	114S	101	PB37861-1	19315	A1A	
PB18965-1	19315	114S	35	PB40572-1	19315	113E	266
PB19091	19315	114S	45	PB51078-1	19315	114S	80
PB19092	19315	114S	107	PB51085-1	19315	114S	79
PB19099	89944	114B	33	PB51106-7	19315	114S	
PB19099	89944	114D		PB51112-2	19315	114S	8
PB19152	19315	114S	86	PB51253-1	19315	114S	55
PB19169	19315	114S	52	PB51484-1	19315	114S	105
PB21026-1	19315	113E	263	PB51609-1	19315	114S	51
PB21027	19315	113E	264	PB52937-1	19315	114S	115
PB21256-1	19315	113E	248	PB52959-2	19315	114S	114
PB21256-1	19315	113E	279	PB53539-1	19315	114S	56
PB21257-1	19315	113E	252	PB6407	19315	114S	99
PB21776-1	19315	113E	270	PB766	19315	114S	71
PB22305	19315	114S	108	PB8327	19315	113E	165
PB22309	19315	114S	109	PB8327	19315	113E	189
PB22313	19315	114S	76	PB8327	19315	113E	194
PB22314	19315	114S	70	PB8327-1	19315	114S	5
PB22315	19315	114S	77	PB8327-2	19315	113E	180
PB22403	19315	114S	89	PB8327-2	19315	113E	65
PB22412	19315	114S	11	PB8327-3	19315	113E	187
PB22418-1	19315	114S	112	PB8784	19315	114S	75
PB22421	19315	114S	110	PB8784	19315	114S	91
PB22639	19315	114S	47	PB9032	19315	114S	83
PB23264-1	19315	113E	201	PC13445-13	19315	114S	4
PB23264-1	19315	113E	203	PC16533-6	19315	114S	25
PB23264-1	19315	113E	29	PC16834-22	19315	114S	85
PB23359-1	19315	113E	278	PC17630	19315	114S	58
PB23359-10	19315	113E		PC17760-2	19315	114S	16
PB23359-11	19315	113E		PC19163-7	19315	114S	1
PB23359-12	19315	113E		PC3 1-2	72794	135	23
PB23359-2	19315	113E		PC51040-1	19315	114S	82
PB23359-3	19315	113E		PC51076-1	19315	114S	36
PB23359-4	19315	113E		PD1105	93561	82	
PB23359-5	19315	113E		PD214A	81996	154	
PB23359-6	19315	113E		PD40166-1	19315	113E	245
PB23359-7	19315	113E		PD50585-2	19315	114S	66
PB23359-8	19315	113E		PD51039-1	19315	114S	10
PB23359-9	19315	113E		PE20	23356	BULK	
PB25699-1	19315	113E	283	PE51038-1	19315	114S	13
PB26064-1	19315	113E	16	PF3 1-2 38	72794	135	21
PB26396-1	19315	113E		PF36-3909-20ZE2	80048	32	49
PB26396-1	19315	113E	256	PG904-1	70152	123	
PB26462-1	19315	113E	265	PN4AANG25	60380	97	10
PB26847-1	19315	113E	267	PP1-75B125C2	21520	113B	90
PB2791-1	19315	113E	148	PP28100C2	21520	113B	69
PB2791-1	19315	113E	225	PP4B60A1	21520	113B	80
PB2791-10	19315	113E		PR9502A	77221	132	146
PB2791-11	19315	113E		PS1101-7		KITS	
PB2791-12	19315	113E		PS1101-7	70255	44C	47
PB2791-13	19315	113E		PS1219-5		KITS	
PB2791-14	19315	113E		PS1219-5	70255	44C	21
PB2791-15	19315	113E		PS1219-8	70255	44B	13
PB2791-16	19315	113E		PS1220-4	70255	44B	3
PB2791-17	19315	113E		PS1239	70255	44C	38
PB2791-2	19315	113E		PS1247-5	70255	44C	46

REFERENCE NUMBER	MFG CODE	FIG NUMBER	ITEM NUMBER	REFERENCE NUMBER	MFG CODE	FIG NUMBER	ITEM NUMBER
PS1264-2		KITS		P17623	06848	214A	420
PS1264-2	70255	44C	19	P18D3049		KITS	
PS198	70255	44C	41	P18D3051-1		KITS	
PS3 1-2	72794	135	22	P18D3065		KITS	
PT810365	66640	E23		P18D3697-2		KITS	
PW4005	73866	BULK		P18D3944		KITS	
P1000-10		KITS		P18631	06848	214A	280
P1000-10	90166	181A	3	P18689		KITS	
P1000-12		KITS		P19064		KITS	
P1000-12	90166	181A	1	P19064	06848	214A	545
P1000-6		KITS		P19086-1		KITS	
P1000-6	90166	181A	5	P19086-1	06848	214A	302
P1001-10		KITS		P19086-2		KITS	
P1001-10	90166	181A	4	P19086-2	06848	214A	
P1001-12		KITS		P19623-40	06848	214A	457
P1001-12	90166	181A	2	P19623-55	06848	214A	202
P1001-6		KITS		P19627-1		KITS	
P1001-6	90166	181A	6	P19627-1	06848	214A	555
P1012	98810	114T	60	P19627-1	06848	214A	562
P10238		KITS		P19627-2		KITS	
P1030		KITS		P19627-2	06848	214A	
P1030	90166	181A	59	P19820		KITS	
P1031	56878	181A	29	P19820	06848	214A	29
P1039	98810	114T	15	P19820	06848	214A	507
P1041	98810	114T	19	P200-17	98524	154	
P1052-8		KITS		P200-5	98524	154	
P1052-8	90166	181A	66	P2006	98810	114T	75
P1067	98810	114T	21	P20109		KITS	
P1074	98810	114T	20	P20109	06848	214A	164
P1083	98810	114T	77	P20109	06848	214A	347
P1088	98810	114T	70	P20109	06848	214A	489
P11D334		KITS		P20109	06848	214A	490
P11D7722		KITS		P20109	06848	214A	491
P1120	98810	114T	9	P20109	06848	214A	492
P1122-1	98810	114A	18	P20109	06848	214A	591
P1122-1	98810	114C	22	P2012	98810	114A	21
P1151	98810	114T	11	P2012	98810	114C	17
P1191	98810	114T	28	P20164		KITS	
P1283	98810	114A	17	P20164	06848	214A	500
P1283	98810	114C	23	P2028	98810	114T	10
P1287	98810	114A		P20351		KITS	
P1287	98810	114A	16	P2046	98810	114T	7
P1287	98810	114C		P20506-2	06848	214A	340
P1290	98810	114T	5	P20506-2	06848	214A	488
P13618		KITS		P20506-3	06848	214A	
P1364	98810	114T	39	P21D4814	83843	123B	32
P13675	06848	214A	296	P21D4815	83843	123B	35
P142	90166	181A	9	P21D4849		KITS	
P14426	06848	214A		P2128	98810	114T	
P14427	06848	214A	501	P21410		KITS	
P1444X	65400	E93		P21410	06848	214A	169
P14577	06848	214A	105	P21818		KITS	
P14577-1		KITS		P22D9452		KITS	
P14577-1	06848	214A		P22D9897	83843	123B	42
P148		KITS		P22D9902		KITS	
P148	70276	181A	14	P22D9904		KITS	
P15C8289	79500	123B	51	P22148		KITS	
P15D6402	83843	123B	45	P22148	06848	214A	81
P15D7667		KITS		P22149		KITS	
P15350		KITS		P22149	06848	214A	66
P15737		KITS		P22151		KITS	
P15737	06848	214A	547	P22151	06848	214A	72
P16179-64		KITS		P22198		KITS	
P16179-64	06848	214A	176	P22198	06848	214A	117
P16630		KITS		P22198	06848	214A	267
P16708		KITS		P22244-2300	06848	214A	210
P16708	06848	214A	45	P22244-3400		KITS	
P16708	06848	214A	48	P22244-3400	06848	214A	212
P17D5083		KITS		P24D4062	83843	123B	55
P17D5576		KITS		P24532	06848	186	3
P17623		KITS		P24532	06840	78A	

REFERENCE NUMBER	MFG CODE	FIG NUMBER	ITEM NUMBER	REFERENCE NUMBER	MFG CODE	FIG NUMBER	ITEM NUMBER
P24532	06848	175C	36	P6580	06848	214A	528
P28B8800-3		KITS		P6588		KITS	
P28B8800-6		KITS		P6855		KITS	
P28B8801-3		KITS		P6855	06848	214A	240
P28B8802-20		KITS		P6855	06848	214A	242
P28B8802-22		KITS		P70006	06848	214A	421
P28B8802-4		KITS		P70006-1	06848	214A	
P28B8802-7		KITS		P70006-2	06848	214A	
P28B8805-10		KITS		P70007		KITS	
P2885		KITS		P70007	06848	214A	464
P2885	06848	214A	128	P70038	06848	214A	362
P2885	06848	214A	228	P70042		KITS	
P2924		KITS		P70042	06848	214A	434
P309	64560	124		P70042	06848	214A	463
P3157		KITS		P70042	06848	214A	469
P3157	06848	214A	550	P70056	06848	214A	
P390		KITS		P70056-1	06848	214A	
P390	43491	181A	8	P70057		KITS	
P4		KITS		P70057	06848	214A	367
P4B	29666	160	15	P70057	06848	214A	390
P4C	29666	42	41	P70064		KITS	
P4C	29666	46	121	P70064	06848	214A	388
P4C	29666	136	21	P70065		KITS	
P4C	29666	136	38	P70065	06848	214A	214
P4C	29666	136	41	P70087		KITS	
P4D	29666	42	38	P70087	06848	214A	363A
P4E	29666	42	40	P70093		KITS	
P4F	29666	42	39	P70093	06848	214A	405
P4F	29666	48	41	P70144		KITS	
P402		KITS		P70144	06848	214A	294
P402	90166	181A	7	P70150	06848	214A	104
P5C	29666	121	2	P70150	06848	214A	265
P5C	29666	121	4	P70179-1	06848	214A	342
P5C	29666	154		P70179-2	06848	214A	
P5C8761	83843	123B	58	P70191-2	06848	214A	336
P5D	29666	50	20	P70191-2	06848	214A	583
P5D	29666	160	28	P70191-3	06848	214A	
P5E	29666	160		P70203	06848	214A	292
P5F	29666	45	51	P70216		KITS	
P5H	29666	160	10	P70216	06848	214A	524
				P70216	06848	214A	529
				P70223		KITS	
P5439		KITS		P70224		KITS	
P5439	06848	214A	219	P70224	06848	214A	30
P576-32	72914	128A	92	P70225		KITS	
P6F	29666	154	60	P70225	06848	214A	24
P6J	29666	154	59	P70225	06848	214A	26
P60110		KITS		P70225	06848	214A	27
P60129		KITS		P70225	06848	214A	28
P60129	06848	214A	73	P70227		KITS	
P60244		KITS		P70227	06848	214A	63
P60245		KITS		P70241		KITS	
P60245	06848	214A	535	P70245		KITS	
P60245	06848	214A	542	P70245	06848	214A	556
P60303		KITS		P70245	06848	214A	565
P60541		KITS		P70250-1	06848	214A	584
P60541	06848	214A	49	P70250-2	06848	214A	
P61144	06848	214A	311	P70264		KITS	
P61144-1	06848	214A		P70264	06848	214A	144
P61144-2	06848	214A		P70280		KITS	
P61195		KITS		P70280	06848	214A	
P61195	06848	214A	205	P70287		KITS	
P61195	06848	214A	357	P70287	06848	214A	18
P61195	06848	214A	498	P70328	06848	214A	168
P61195	06848	214A	502	P70328-1	06848	214A	
P61250		KITS		P70328-2	06848	214A	
P61250	06848	214A	78	P70349		KITS	
P646		KITS		P70349	06848	214A	52
P646	90166	181A	22	P70385-1	06848	214A	348
P6580		KITS		P70385-2	06848	214A	
P6580	06848	214A	523	P70401		KITS	

REFERENCE NUMBER	MFG CODE	FIG NUMBER	ITEM NUMBER	REFERENCE NUMBER	MFG CODE	FIG NUMBER	ITEM NUMBER
P70401	06848	214A	153	P70781		KITS	
P70403	06848	214A	136	P70781	06848	214A	46
P70416		KITS		P70784	06848	214A	21
P70416	06848	214A	152	P70790		KITS	
P70442-1	06848	214A	520	P70790	06848	214A	137
P70442-1	06848	214A	525	P70795		KITS	
P70442-3S	06848	214A		P70795	06848	214A	146
P70442-5	06848	214A		P70796		KITS	
P70478		KITS		P70796	06848	214A	147
P70478	06848	214A	231	P70854	06848	214A	150
P70480		KITS		P70903		KITS	
P70480	06848	214A	229	P70903	06848	214A	549
P70481	06848	214A	233	P70918		KITS	
P70486-1	06848	214A	487	P70923	06848	214A	561
P70486-2	06848	214A		P70926	06848	214A	564
P70491		KITS		P70937		KITS	
P70495		KITS		P70937	06848	214A	216
P70495	06848	214A	62	P70941		KITS	
P70514		KITS		P70941	06848	214A	325
P70514	06848	214A	309	P729		KITS	
P70518	06848	214A	313	P729	70276	181A	37
P70518-1	06848	214A		P8C5526		KITS	
P70525		KITS		P8C5769	83843	123B	38
P70525	06848	214A	316	P8C5974	83843	123B	59
P70528		KITS		P8C6842-10		KITS	
P70528	06848	214A	306	P8C7806	83843	123B	36
P70536	06848	214A	304	P8505		KITS	
P70536-1	06848	214A		P8508		KITS	
P70536-2	06848	214A		P893		KITS	
P70549-1	06848	214A	582	P893	43491	181A	53
P70549-2	06848	214A		P9D5655		KITS	
P70563		KITS		P9201-64		KITS	
P70563	06848	214A	213	P9201-64	06848	214A	455
P70565		KITS		P9201-67		KITS	
P70579	06848	214A	327	P9201-67	06848	214A	456
P70582	06848	214A	329	P9201-70		KITS	
P70588	06848	214A	331	P9201-70	06848	214A	295
P70590	06848	214A	324	P9201-70	06848	214A	505
P70593		KITS		QB80001-6	19315	A24	3
P70593	06848	214A	322	QB80005-13	19315	A24	5
P70598		KITS		QB80051-7	19315	E70	2
P70598	06848	214A	323	QB80111-1	19315	A15	5
P70604-1	06848	214A	334	QB80112-1	19315	A15	6
P70604-2	06848	214A		QB80114-1	19315	A17	3
P70607	06848	214A	206	QB80116-1	19315	A17	4
P70629		KITS		QB80118-1	19315	A24	1
P70629	06848	214A	274	QB80119-1	19315	A5	
P70640		KITS		QQA250-116061T6-020	81348	BULK	
P70648		KITS		RA10032-3	51663	79A	14
P70648	06848	214A	554	RA10032-3		KITS	
P70680	06848	214A	281	RA10476	51663	175C	30
P70681	06848	214A	282	RA10539	51663	175C	44
P70683	06848	214A	279	RA11071	51663	79A	34
P70684	06848	214A	278	RA11071	51663	81A	20
P70685		KITS		RA11071		KITS	
P70685	06848	214A	277	RA11071	51663	KITS	
P70685	06848	214A	563	RA11227	51663	79A	28
P70686	06848	214A	276	RA11227	51663	81A	15
P70714	06848	214A	588	RA11227	51663	KITS	
P70714	06848	214A	589	RA11227		KITS	
P70715	06848	214A	590	RA11228-1		KITS	
P70716	06848	214A	546	RA11228-1	51663	KITS	
P70718	06848	214A	566	RA11229	51663	79A	38
P70721	06848	214A	534	RA11229	51663	81A	32
P70721	06848	214A	541	RA11229		KITS	
P70725	06848	214A	293	RA11231	51663	79A	37
P70728		KITS		RA11231	51663	81A	31
P70728	06848	214A	332	RA11231		KITS	
P70744		KITS		RA11231	51663	KITS	
P70772		KITS		RA11234	51663	81A	19
P70772	06848	214A	159	RA11234	51663	KITS	

REFERENCE NUMBER	MFG CODE	FIG NUMBER	ITEM NUMBER	REFERENCE NUMBER	MFG CODE	FIG NUMBER	ITEM NUMBER
RA11234		KITS		RA22175	51663	KITS	
RA11234-1	51663	79A	33	RA22176	51663	KITS	
RA11234-1		KITS		RA22176B	51663	81A	
RA11247		KITS		RA22380	51663	79A	
RA11247	51663	81A	14	RA22380	51663	KITS	
RA11248	51663	81A		RA22408	51663	KITS	
RA11249	51663	79A	24	RA22432	51663	79A	
RA11249	51663	81A	9	RA3M4-2	51663	55	57
RA11249		KITS		RA3485-1		KITS	
RA11249	51663	KITS		RA5082	51663	175C	8
RA11249-1	51663	79A		RA5084	51663	175C	15
RA11249-1	51663	81A		RA5087	51663	175C	17
RA11249-1	51663	KITS		RA5208-1	51663	175C	34
RA11249-1		KITS		RA5212-1	51663	175C	42
RA11249-2	51663	79A		RA5215	51663	175C	11
RA11249-2	51663	81A		RA5216	51663	175C	18
RA11249-2		KITS		RA5218	51663	175C	22
RA11249-2	51663	KITS		RA5227	51663	175C	20
RA11249-3	51663	79A		RA5228-1	51663	175C	40
RA11249-3	51663	81A		RA5228-1	51663	175C	45
RA11249-3	51663	KITS		RA5233	51663	BULK	
RA11249-3		KITS		RA5233	51663	175C	9
RA11253	51663	79A	30	RA5234	51663	175C	5
RA11253	51663	81A	16	RA5235	51663	175C	14
RA11253		KITS		RA5236	51663	175C	16
RA11253	51663	KITS		RA5237		KITS	
RA11253-1	51663	79A		RA5237	51663	76B	23
RA11253-1	51663	81A		RA5237	51663	175C	4
RA11253-1	51663	KITS		RA5296	51663	175C	12
RA11253-1		KITS		RA5297	51663	175C	13
RA11253-2	51663	79A		RA5299		KITS	
RA11253-2	51663	81A		RA5299	51663	76B	14
RA11253-2		KITS		RA5299	51663	175C	33
RA11253-2	51663	KITS		RA5381		KITS	
RA11253-3	51663	79A		RA5381	51663	76B	13
RA11253-3	51663	81A		RA5381	51663	175C	32
RA11253-3	51663	KITS		RA6424	51663	175C	7
RA11253-3		KITS		RA7608	51663	76B	16
RA11253-4	51663	79A		RA7608	51663	76B	22
RA11253-4		KITS		RA7608		KITS	
RA11253-4	51663	KITS		RA7627	51663	76B	6
RA11253-5	51663	KITS		RA7653	51663	175C	28
RA11253-5		KITS		RA7654	51663	175C	27
RA11253-5	51663	79A		RA8169	51663	181A	72
RA11256	51663	79A	32	RA8377	51663	76B	18
RA11256	51663	81A	18	RA8626		KITS	
RA11256		KITS		RA8692ST50C		KITS	
RA11256	51663	KITS		RA8930	51663	175C	24
RA11257	51663	79A	40	RA8933	51663	76B	9
RA11257	51663	81A	23	RA8933		KITS	
RA11257	51663	KITS		RA8934	51663	76B	10
RA11257		KITS		RA9683		KITS	
RA11259	51663	81A	33	RA9684	51663	81A	2
RA11268	51663	79A	43	RA9684		KITS	
RA11268		KITS		RB11226	51663	79A	42
RA11288-1	51663	81A	27	RB11226	51663	81A	26
RA11322	51663	79A	4	RB11226		KITS	
RA11322		KITS		RB11226	51663	80	120
RA15407	51663	79A	12	RB11226	51663	81	103
RA15407		KITS		RB11235		KITS	
RA207SB9	05683	30	16	RB11235	51663	KITS	
RA22168	51663	76		RB11252	51663	81A	
RA22168	51663	76B		RB11262	51663	79A	18
RA22168	51663	KITS		RB11263-4	51663	79A	48
RA22169	51663	76		RB11264-1	51663	79A	29
RA22169	51663	76B		RB11269	51663	79A	46
RA22169	51663	KITS		RB11269		KITS	
RA22170	51663	76		RB11321	51663	79A	8
RA22170	51663	KITS		RB12122-112	51663	79A	35
RA22175	51663	81A		RB12122-112		KITS	
RA22175	51663	KITS		RB12188	51663	79A	10

REFERENCE NUMBER	MFG CODE	FIG NUMBER	ITEM NUMBER	REFERENCE NUMBER	MFG CODE	FIG NUMBER	ITEM NUMBER
RB12188		KITS		RD205SB7	83324	81	37
RB12192	51663	79A	8	RD207SB9	83324	96	135
RB12192		KITS		RD208SB10	83324	100	43
RB12311	51663	79A	7	RD313SB18	83324	28	29
RB12311		KITS		RD5201-1	51663	175C	46
RB12449-1		KITS		RD903SB5	83324	133	21
RB15257-3		KITS		REB3N		KITS	
RB15257-7		KITS		REB3N2	21335	55	43
RB15259-3		KITS		REB3N2	21335	55	53
RB15259-3	51663	KITS		REB3N2	21335	55	74
RB15259-5	81904	175C	48	REB3N2	21335	55	82
RB15259-6	51663	76B	25	REB3N2	21335	55	87
RB15259-6		KITS		REB3N2	21335	169	93
RB5231	51663	175C	19	REPB2N2FS210	21335	56	99A
RB5232	51663	175C	1	REPB3N2FS210	21335	56	88
RB5240	51663	175C	41	REPB3N2FS210	21335	56	99
RB5543	51663	76B	19	REP3ML3FS210	21335	96	31
RB7405-29	51663	76B	4	REP3ML3FS210	21335	106	8
RB7405-29		KITS		REP4M6FS210	21335	87	101
RB8357	51663	76B	26	REP4M6FS210	21335	87	115
RB8357		KITS		REP4M6FS210	21335	87	127
RB8358-515-5-16	51663	175C	10	REP4M6FS210	21335	87	131
RB8358-515-8		KITS		REP4M6FS210	21335	87	137
RB8358-515-8	51663	76B	21	REP4M6FS210	21335	87	145
RB8358-515-8	51663	79A	15	REP4M6FS210	21335	87	156
RB8358-515-8	51663	81A	3	REP4M6FS210	21335	87	21
RB8376	51663	76B	17	REP4M6FS210	21335	87	27
RB8515-16-1-1-4	51663	KITS		REP4M6FS210	21335	87	43
RB8515-16-1-1-4		KITS		REP4M6FS210	21335	87	49
RB8935	51663	76B	12	REP4M6FS210	21335	87	67
RB8935	51663	175C	31	REP4M6FS210	21335	87	73
RCA1	80510	113		REP4M6FS210	21335	88	6
RCA1	80510	114		REP4M6FS210	21335	98	22
RCA1	80510	114E		REP4M6FS210	21335	98	9
RCA2	80510	113		REP4M6FS210	21335	99	6
RCA2	80510	114		REP4M6FS210	21335	159	16
RCA2	80510	114E		REP4M6FS210	21335	159	34
RCA2W	80510	113		REP4M6FS210	21335	159	4
RCA2W	80510	114		REP4M6FS210	21335	159	9
RCA2W	80510	114E		RE4F5	21335	55	83
RC20GF101J	14028	113B	89	RG10352	51663	76B	28
RC20GF104J	81349	113B	85	RG11250	51663	80	118
RC20GF271J	81349	113B	82	RG11250	51663	81	101
RC20GF391J	81349	113B	33	RG11250	51663	81A	
RC20GF472J	81349	113B	42	RG11260A1	51663	79	
RC20GF474J	81349	113B	83	RG11260A3	51663	79	160
RC27-11	76005	176		RG11260A3	51663	79A	
RC27-16	76005	176		RG5200F	51663	175	
RC27-18	76005	176	30	RG5200F	51663	175C	
RC27-19	76005	176	25	RG5530V	51663	76B	1
RC27-2	76005	176	32	RG58CU	81349	BULK	
RC27-20	76005	176	29	RG6100H	51663	76	9
RC27-45	76005	176	24	RG6100H	51663	76B	
RC27-45	76005	176	28	RHB29N	11583	213	
RC27-48	76005	176	21	RHB32N	11583	213	
RC27-6	76005	176	22	RHB37N	11583	213	
RC27-6	76005	176	26	RH624B	89944	114C	
RC27ESA1	76005	176	20	RL18SB6	83324	133	20
RC32GF362J	81349	113B	88	RL21SB6	83324	11	41
RC60	98810	113		RL21SB6	05683	30	8
RC60	98810	114		RL21SB6	83324	178	67
RC60	98810	114T		RL24SB7	83324	16	66
RC60MS	98810	113		RL24SB7	83324	18	4
RC60MS	98810	114		RL24SB7	83324	26	28
RC60MS	98810	114T		RL24SB7	83324	27	19
RD11258	51663	81A	6	RL24SB7	83324	27	20
RD11265	51663	79A	23	RL24SB7	83324	30	13
RD12189	51663	79A	16	RL24SB7	83324	30	25
RD205SB7	83324	80	131	RL24SB7	83324	30	32
RD205SB7	83324	80	48	RL24SB7	83324	30	34
RD205SB7	83324	81	112	RL24SB7	83324	34	33

REFERENCE NUMBER	MFG CODE	FIG NUMBER	ITEM NUMBER	REFERENCE NUMBER	MFG CODE	FIG NUMBER	ITEM NUMBER
RL24SB7	83324	79		RST50	80756	125A	49
RL24SB7	83324	79	155	RST78		KITS	
RL24SB7	83324	80	130	RST78	80756	125A	53
RL24SB7	83324	80	47	RS106	77668	BULK	
RL24SB7	83324	81	111	RS77R2S1512ANOG	43334	114G	24
RL24SB7	83324	81	36	RS77R2S1512ANOG	43334	114H	26
RL24SB7	83324	104	24	RS77SR4DZD7540W	24617	114E	46
RL24SB7	83324	104	56	RS77SR4DZD7540W	24617	114F	61
RL24SB7	83324	157		RS87	80756	178	45
RL24SB7	83324	165	69	RS93C	80756	104	23
RL28SB8	83324	30	11	RV2200-4-2	98996	BULK	
RL28SB8	83324	30	17	RV2200-4-4	98996	BULK	
RL28SB8	83324	30	19	RV2200-4-5	98996	BULK	
RL28SB8	83324	30	21	RV2200-5-2	98996	BULK	
RL28SB8	83324	79	101	RV2200-5-3	98996	BULK	
RL28SB8	83324	79	108	RV2200-5-4	98996	BULK	
RL28SB8	83324	79	119	RV2200-5-6	98996	BULK	
RL28SB8	83324	79	126	RV2200-6-2	98996	BULK	
RL28SB8	83324	79	183	RV250-4-1	98996	123	14
RL28SB8	83324	79	185	RV250-5-1	98996	BULK	
RL28SB8	83324	79	187				
RL28SB8	83324	79	189	RW21V820	81349	130	12
RL28SB8	83324	79	54	RZA10316	83324	30	10
RL28SB8	83324	79	92	RZA10959	83324	29	4
RL28SB8	83324	80	128	R105SB7	83324	18	5
RL28SB8	83324	81	113	R1110SB12	83324	16	69
RL28SB8	83324	157		R11254	51663	81A	1
RL28SB8	83324	178	69	R1206SB10	83324	157	
RL31SB9	83324	96	134	R1820-84A	66640	176	
RL33SB9	83324	28	30	R1820-84A	66640	183A	
RL33SB9	83324	29	9	R1820-84C	66640	176	85
RL33SB9	83324	30	15	R1820-84C	66640	183A	
RL33SB9	83324	30	23	R203-1560H34-004	75829	46	
RL38SB9	83324	100	42	R205SB7	83324	16	67
RL47SB10	83324	16	68	R205SB7	05683	34	34
RL47SB8	05683	30	30	R205SB7	83324	165	70
RL72SB8	05683	158		R206SB10	83324	157	55
RL82SB12	05683	28	28	R206SB8	83324	157	54
RM9310KMBR	21335	158		R21146	50599	77	
RNF10410-3	72914	128A	169	R258EADC0150	50599	81	41
RRT112	80756	125A		R3001T6-5	29666	50	317
RR100C	80756	90	22	R319G6	38443	188	
RR100C	80756	165	56	R348EC0C4-0390	50599	77	12
RR112	80756	107	40	R3800DD4-019 1-4	50599	167	
RR112	80756	107	59	R4G	71286	41	
RR11244	51663	81A	25	R4G	71286	132	103
RR125	80756	107	38	R4SSLTG	70854	114H	69
RR145		KITS		R4SSLTG	70854	114J	56
RR145	80756	125A	54	R4SSLTO	70854	114H	50
RR314C		KITS		R4SSLTO	70854	114J	38
RR314C	80756	16	89	R4SS4G2	70854	114G	69
RR314L	80756	BULK		R4SS5LTO	70854	114G	49
RR354	80756	178	38	R4X1E		KITS	
RR356C		KITS		R400-100		KITS	
RR356C	80756	16	54	R400-63B		KITS	
RR362C		KITS		R400-64		KITS	
RR362C	77527	16	35	R400-66B		KITS	
RR400	80756	178	41	R400-67A		KITS	
RR412	80756	178		R400-68		KITS	
RR462		KITS		R400-68A		KITS	
RR462	80756	25	9	R400-69D		KITS	
RR537		KITS		R400-69E		KITS	
RR537	80756	18	21	R400-71		KITS	
RR575	80756	184	6	R400-71	77200	175F	16
RR87		KITS		R400-81		KITS	
RR87	80756	19	17	R400-81A		KITS	
RR87	80756	19	19	R400-82		KITS	
RR87C	80756	165	58	R400-88C	77200	175F	3
RST143	80756	156	10	R400-913	77200	175F	6
RST150	80756	125A	86	R400-92D	77200	175F	
RST50		KITS		R400-92H	77200	175F	

REFERENCE NUMBER	MFG CODE	FIG NUMBER	ITEM NUMBER	REFERENCE NUMBER	MFG CODE	FIG NUMBER	ITEM NUMBER
R400-96		KITS		SB1114-2	78286	155	31
R400-97A	77200	175F	7	SB1114-4	78286	82	43
R400-97D	77200	175F	4	SB1114-4	78286	151	30
R400-99		KITS		SB1114-4	78286	155	31
R460M3	81039	90		SB1115-1	78286	178	54
R460M3-1	81039	90		SB1253-1	78286	157	20
R460M3-1	81039	90A		SB1253-1	78286	157	37
R460M3-2	81039	90		SB1355-1	78286	23	
R460M3-21	81039	90		SB1355-2	78286	23	25
R460M3-211	81039	90	29	SB1500-1	78286	38	57
R460M3-211	81039	90	31	SB1510-1	78286	18	
R6FFANG25	38443	133		SB1510-2	78286	18	23
R6ZZQ5A7	38443	133	16	SB1511-2	78286	18	24
R600-103	77200	175F	9	SB1550-1	78286	178	
R600-104J	77200	175F	23	SB1550-1	78286	178	63
R600-110A	77200	175F	12	SB1553-1	78286	21	
R600-121B	77200	175F	29	SB1553-1	78286	21	44
R600-122A	77200	175F	30	SB1557-1	78286	178	
R600-167	77200	175F	24	SB1557-1	78286	178	14
R600-172	77200	175F	8	SB2052-1	78286	23	29
R600-175	77200	175F	5	SB2300-3	78286	158	24
R600-42	77200	175F	35	SB2303-1	78286	23	24
R600-82A	77200	175F	38	SB2403-1	78286	24	30
R600-83B	77200	175F	31	SB2500-3	78286	38	65
R600-84C	77200	175F	20	SB2500-3	78286	38	68
R600-87J	77200	175F	10	SB2501-1	78286	38	69
R600-88		KITS		SB3153A1	78286	158	64
R600-88	77200	175F	18	SB3153B1	78286	158	65
R600-89H	77200	175F	28	SB3157A1	78286	16	40
R600-90A	77200	175F	25	SB3157A1	78286	16	41
R600-91D	77200	175F	27	SB3157B1	78286	16	43
R600-92D	77200	175F	26	SB3158A1	78286	16	91
R600-93		KITS		SB3158B1	78286	16	93
R600-93	77200	175F	19	SB3159A1	78286	16	60
R600-94	77200	175F	17	SB3159B1	78286	16	92
R600-96	77200	175F	32	SB3201A1	78286	25	84
R600-97		KITS		SB3201A1	78286	158	57
R600-97	77200	175F	22	SB3201B1	78286	25	89
R600-98A	77200	175F	34	SB3201B1	78286	158	58
R9ZJHT2	52676	123B	47	SB3205A1	78286	20	5
SAC251	13033	208	80	SB3205A1	78286	20	7
SALP-T6-7	29666	50	181	SB3205B1	78286	20	10
SA1002	98810	114T	65	SB3205B1	78286	20	11
SA1096	98810	114T	40	SB3206A1	78286	25	87
SA1357	98810	114T	69	SB3206B1	78286	25	88
SA1367	98810	114T	51	SB3207A1	78286	158	87
SA1370	98810	114T	55	SB3207B1	78286	158	88
SB1050-2	78286	25	51	SB3252A1	78286	158	85
SB1050-2	78286	25	52	SB3252A1	78286	162B	13
SB1050-2	78286	25	62	SB3252B1	78286	158	86
SB1050-2	78286	25	63	SB3252B1	78286	162B	10
SB1050-2	78286	25	68	SB3252B1	78286	162B	5
SB1050-2	78286	25	70	SB3305A1	78286	27	11
SB1050-2	78286	25	73	SB3305B1	78286	27	13
SB1051-1	78286	25		SB3502A1	78286	27	14
SB1051-2	78286	25	48	SB3502B1	78286	27	17
SB1051-2	78286	25	55	SB3601A1	78286	26	17
SB1052-1	78286	25		SB3601A1	78286	26	30
SB1052-2	78286	25	56	SB3601B1	78286	26	18
SB1053-1	78286	25		SB3601B1	78286	26	31
SB1053-2	78286	25	75	SCD9612-12	80063	175F	33
SB1053-2	78286	25	77	SFA101-9SA12A	83324	30	14
SB1054-1	78286	25		SFB111-11SA145A	05683	30	22
SB1054-2	78286	25	65	SF101-9SA10A	83324	157	51
SB1055-1	78286	158	75	SF101-9SA11A	83324	79	
SB1112-1	78286	157	13				
SB1112-1	78286	157	43				
SB1113-1	78286	156	20				
SB1114-1	78286	82		SF101-9SA14A	83324	104	
SB1114-2	78286	82		SF101-9SA16A	78286	158	
SB1114-2	78286	151	30	SF101-9SA28A	83324	27	21

REFERENCE NUMBER	MFG CODE	FIG NUMBER	ITEM NUMBER	REFERENCE NUMBER	MFG CODE	FIG NUMBER	ITEM NUMBER
SF101-9SA8A	05683	30	26	SS164	79318	114G	37
SF101-9SA9A	83324	BULK		SS164	79318	114H	37
SF1019SA89A	83324	104	25	SS164	79318	114J	29
SF1019SA89A	83324	104	57	SS2932	78286	100	14
SF111-11SA13A	83324	30	20	SS2945		KITS	
SF111-11SA13A	83324	178	70	SS2945	78286	100	20
SF111-11SA14A	83324	157		SS2945	78286	106	72
SF111-11SA15A	83324	157	52	SS354B	79318	114G	102
SF111-11SA18A	83324	157	53	SS354B	79318	114G	92
SF121-12SA18A	05683	30	24	SS354B	79318	114H	92
SF91-7SA11A	83324	178	68	SS354B	79318	114H	98
SF91-7SA12A	05683	30	9	SS354B	79318	114J	77
SF91-7SA8A	83324	11	42	SS354B	79318	114J	83
SIKDD7FS110	21335	114J		SS355C80-30	79318	114G	112
SKP3575	78286	A2	8	SS355C80-30	79318	114G	43
SKP4386-4	78286	16		SS355C80-30	02282	114H	47
SK116		KITS		SS355C80-30	79318	114J	37
SK68		KITS		SS356-1	79318	114G	101
SL300A	94430	213		SS356-1	79318	114G	53
				SS356-1	79318	114G	81
SP1896	94592	211	7	SS356-1	79318	114G	91
SP397		KITS		SS359B1	79318	114J	21
SP399		KITS		SS359PB6	79318	114J	
SP4	60995	85B	24	SS4A	40920	123	66
SP406		KITS		SS4004	78286	12	36
SP4070	96603	122		SS4006-5-56	78286	153	23
SP4070-1	96603	122		SS4006-5-68	78286	159	23
SP4070-3	96603	122	14	SS4015-1S16S	78286	173	20
SP412		KITS		SS4015-2S16S	78286	167	15
SP457		KITS		SS4015-4-19	78286	110	62
SP458		KITS		SS4015-4-19	78286	111	67
SP460		KITS		SS4015-4-19	78286	111	72
SP469-1		KITS		SS4015-4S13S	78286	167	13
SP470-2		KITS		SS4016-1-19	78286	110	
SP471		KITS		SS4016-1-19	78286	139	
SP476		KITS		SS4017-6	78286	30	
SP511		KITS		SS4017-7		KITS	
SP512		KITS		SS4017-7	78286	30	1
SP513		KITS		SS4018-2	78286	29	5
SP514		KITS		SS4018-2	78286	30	3
SP521-1		KITS		SS4023	78286	12	22
SP521-2		KITS		SS4029-3	78286	169	39
SP529		KITS		SS4050-2	78286	50	239
SP530		KITS		SS4050-2	78286	50	242
SP583		KITS		SS4050-2	78286	50	245
SP584		KITS		SS4050-2	78286	50	45
SP6010	61349	KITS		SS4050-2	78286	132	
SP609-1		KITS		SS4051	78286	12	27
SP609-2		KITS		SS4055-3-81	78286	55	97
SP631		KITS		SS4055-4-165	78286	153	16
SP698	96603	122		SS4055-4-472	78286	88	20
SP805-2		KITS		SS4056-8-062	78286	169	
SP841-1		KITS		SS4059-04-75	78286	93	35
SP841-2		KITS		SS4059-06-062	78286	169	70
SP851		KITS		SS4059-10-418	78286	89	8
SR2XR5279W	43334	113F	142	SS4059-11-250	78286	102	28
SR3DXR5366J	43334	113F	139	SS411B2-10A	79318	114G	111
SR7A	61349	113		SS4400-1		KITS	
SS100	79318	114G	94	SS4400-1	78286	93	13
SS100	79318	114H	88	SS4400-1	78286	93	18
SS100	79318	114J	73	SS4400-1	78286	93	27
SS1050-3	78286	50		SS4400-1	78286	93	38
SS1050-3	78286	123	107	SS4400-1	78286	101	36
SS1074	78286	172	4	SS4400-1	78286	102	24
SS1074	78286	172	42	SS4400-1	78286	153	22
SS1074	78286	172	44	SS4400-2	78286	153	24
SS116	79318	114G		SS4422-1		KITS	
SS116	79318	114G	54	SS4422-1	78286	28	19
SS131B	79318	114G	120	SS500B2-10	79318	114G	
SS154-6	79318	114G	20	SS500B2-4	02282	114G	
SS154-6	79318	114H	22	SS500B2-6	79318	114G	

REFERENCE NUMBER	MFG CODE	FIG NUMBER	ITEM NUMBER	REFERENCE NUMBER	MFG CODE	FIG NUMBER	ITEM NUMBER
SS50084-10	02282	114G		S10-55-3013	78286	141	32
SS50084-6	79318	114G		S1008	98810	114T	49
SS50086-10	79318	114G		S1010	98810	114T	47
SS50181-20	79318	114G		S11-35-4746	78286	178	65
SS5030-1	78286	172	22	S119	70255	44A	6
SS5030-1	78286	172	67	S12-10-3086	78286	12	
SS5070-172289		KITS		S12-20-2325-1	78286	50	104
SS5077	78286	162	52	S12-20-2325-1	78286	50	141
SS510747	79318	114J	20	S12-20-2611-4	78286	50	102
SS600	79318	114G	23	S12-20-2611-4	78286	50	139
SS6185-4-9	79318	114G		S12-35-4113	78286	23	
SS6185-4-9	79318	114H		S12-35-7037	78286	26	26
SS6185-4-9	79318	114J		S14-10-2126-1	78286	37	40
SS7014	78286	130	2	S14-10-2126-2	78286	37	41
SS7015-432	78286	130	4	S14-20-2151	78286	42	12
SS9021	78286	114		S14-20-2151	78286	42	22
SS9682-3	79318	114G	4	S14-20-2155-3	78286	42	16
SS99	79318	114G	87	S14-20-2155-4	78286	42	
SS99	79318	114G	97	S14-20-2392-24	78286	47	3
ST1620-64100-500T98-5	78286	A17		S14-20-2529-26	78286	50	100
ST4D	61349	11		S14-20-2529-26	78286	50	137
ST4D	61349	77		S14-20-2637-4	78286	41	203
ST6B	61349	77		S14-20-2637-5	78286	41	
ST7A	61349	32		S14-20-2640-13	78286	48	36
ST7B	61349	32		S14-20-2640-18	78286	48	35
ST7C	61349	32		S14-20-2663-13	78286	48	
ST7D	61349	32		S14-20-2749	78286	49	124
SWE81048	87641	A1	8	S14-20-2772-4	78286	141	39
SWE8473	87641	E28	2	S14-20-2946	78286	41	
SWE8473W	87641	E28		S14-20-5178	78286	47	1
SWE8673W	87641	E28	3	S14-20-5179	78286	47	9
SWSS1209-01MR	19315	113E	45	S14-20-5184	78286	47	6
SWSS1612-07KP	19315	113E	226	S14-25-3225	78286	165	2
S10-10-2039-1	78286	37	11	S14-30-3122	78286	55	32
S10-10-2039-1	78286	37	13	S14-30-3122	78286	55	36
S10-10-2039-1	78286	37	15	S14-30-3150	78286	68	4
S10-10-2039-4	78286	37	9	S14-30-3150	78286	68	6
S10-10-3365	78286	19		S14-30-3152	78286	68	8
S10-10-3365-1		KITS		S14-30-3154	78286	68	
S10-10-3365-1	78286	19	3	S14-30-3461	78286	70	29
S10-10-3368	78286	19	4	S14-30-3463	78286	70	21
S10-10-3369	78286	19		S14-30-3468	78286	70	14
S10-10-3369-1		KITS		S14-30-3469	78286	70	10
S10-10-3369-1	78286	19	5	S14-30-3471	78286	70	22
S10-10-3385	78286	19		S14-30-5433	78286	172	
S10-10-3389	78286	18		S14-30-5434	78286	172	27
S10-10-3389-1		KITS		S14-30-5434	78286	172	72
S10-10-3389-1	78286	18	29	S14-30-5435	78286	172	
S10-10-5349	78286	20		S14-30-5435	78286	172	4
S10-10-5349-1	78286	20	16	S14-30-5436	78286	172	29
S10-10-5359-1		KITS		S14-30-5436	78286	172	74
S10-10-5359-1	78286	15	7	S14-30-5437	78286	172	26
S10-10-5360	78286	15	1	S14-30-5437	78286	172	71
S10-10-5363		KITS		S14-30-6028	78286	79	16
S10-10-5363	78286	12		S14-30-6028	78286	79	36
S10-10-5366		KITS		S14-30-6028	78286	79	46
S10-10-5366	78286	12		S14-30-6028	78286	80	16
S10-10-5371		KITS		S14-30-6028	78286	80	27
S10-10-5372-2		KITS		S14-30-6028	78286	81	16
S10-10-5372-2	78286	12	23	S14-30-6029	78286	79	3
S10-10-6432	78286	17		S14-30-6029	78286	80	3
S10-10-6432-1	78286	17		S14-30-6029	78286	81	3
S10-10-6432-2		KITS		S14-30-6029-1	78286	79	
S10-10-6432-2	78286	17	21	S14-30-6034	78286	79	14
S10-20-5006-2	78286	50		S14-30-6034	78286	80	14
S10-25-1205	78286	108	49	S14-30-6034	78286	80	25
S10-50-4147-10	78286	A1	9	S14-30-6034	78286	81	14
S10-50-4147-2	78286	A1		S14-30-6218	78286	79	24
S10-50-4147-6	78286	A1		S14-30-6218	78286	80	44
S10-50-4147-8	78286	A1		S14-30-6218	78286	81	33
S10-55-3013	78286	140	19	S14-35-2227-1	78286	178	39

REFERENCE NUMBER	MFG CODE	FIG NUMBER	ITEM NUMBER	REFERENCE NUMBER	MFG CODE	FIG NUMBER	ITEM NUMBER
S14-35-2236-1	78286	178	7	S14-50-1015	78286	47	
S14-35-2237	78286	178		S14-50-2036-2	78286	116	5
S14-35-2237-2	78286	178	34	S14-50-2169	78286	115	38
S14-35-2385	78286	178	58	S14-50-2193	78286	115	5
S14-35-2390-2	78286	178		S14-50-2194	78286	115	1
S14-35-2390-4	78286	178	21	S14-50-2195	78286	115	3
S14-35-2391-1	78286	178	20	S14-50-2498	78286	122	60
S14-35-2439	78286	178		S14-50-3026	78286	115	26
S14-35-2440	78286	178	36	S14-50-3044	78286	121	6
S14-35-2447	78286	178	50	S14-50-4102	78286	A2	1
S14-35-2452-1	78286	178	25	S14-50-4161	78286	A2	2
S14-35-2452-1	78286	178	62	S14-50-5069-2	78286	115	102
S14-35-2470	78286	178	28	S14-50-5074	78286	115	
S14-35-2510	78286	178		S14-55-2239-1	78286	135	6
S14-35-2510-3	78286	178	37	S14-60-2527-1	78286	114	
S14-35-2513	78286	178		S14-60-2527-2	78286	114	48
S14-35-2513-1	78286	178	22	S1507-2523	78286	28	
S14-35-2514	78286	178		S1507-2523-1	78286	28	
S14-35-2514-1	78286	178		S1507-2523-1	78286	KITS	
S14-35-2520	78286	178	53	S1510-21015	78286	12	
S14-35-2527	78286	178		S1510-21020	78286	12	
S14-35-4062-1	78286	11	33	S1510-21020-1	78286	12	
S14-35-4077	78286	31	40	S1510-21020-2		KITS	
S14-35-4100	78286	11		S1510-21020-2	78286	12	20
S14-35-4100-1	78286	11		S1510-21406		KITS	
S14-35-4100-2	78286	11	40	S1510-21406	78286	16	
S14-35-4101	78286	25	23	S1510-23071	78286	19	13
S14-35-4101	78286	29	2	S1510-23072	78286	19	
S14-35-4326	78286	11	38	S1510-23072-1	78286	19	30
S14-35-4347	78286	11	37	S1510-23073	78286	19	22A
S14-35-4348	78286	11	39	S1510-23074	78286	19	11
S14-35-4349	78286	11	30	S1510-23076-1		KITS	
S14-35-4401	78286	32	195	S1510-23076-1	78286	19	12
S14-35-4401	78286	144	132	S1510-23078	78286	19	23
S14-35-4401	78286	145	182	S1510-23079	78286	19	22
S14-35-4405-5	78286	11	18	S1510-23085		KITS	
S14-35-4442	78286	11	22	S1510-23085	78286	19	29
S14-35-4443	78286	11	24	S1510-24054	78286	14	15
S14-35-4445	78286	11	23	S1510-24054-1	78286	14	
S14-35-4447	78286	11	25	S1510-24063	78286	13	
S14-40-2018	78286	87	33	S1510-24063	78286	14	14
S14-40-2044	78286	88	16	S1510-24064	78286	13	
S14-40-2140	78286	87	34	S1510-24064	78286	14	12
S14-40-3110	78286	107	57	S1510-26017		KITS	
S14-40-5008		KITS		S1510-26017	78286	17	28
S14-40-5008	78286	100	44	S1510-26038	78286	17	41
S14-40-5009	78286	100	52	S1510-26038	78286	17	47
S14-40-5039	78286	100	65	S1510-26039	78286	17	
S14-40-5054-2	78286	100		S1510-26039-1	78286	17	33
S14-40-5054-3		KITS		S1510-26055	78286	17	12
S14-40-5058	78286	34	22	S1510-26055	78286	103	29
S14-40-5058	78286	148	35	S1510-26055-1	78286	17	
S14-40-5058	78286	149	19	S1510-26055-1	78286	103	
S14-40-5131-1	78286	100		S1510-26057	78286	17	9
S14-40-5131-3	78286	100		S1520-61987	78286	32	192
S14-40-5194		KITS		S1520-61987	78286	144	128
S14-40-5194	78286	100	17	S1520-61987	78286	145	178
S14-40-7004	78286	34	11	S1520-62278	78286	45	
S14-40-7004	78286	149	1	S1520-62278-3	78286	45	9
S14-40-7005	78286	149		S1520-63141	78286	150	18
S14-40-7009	78286	34	12	S1525-50514	78286	165	30
S14-40-7009	78286	149	2	S1525-50517-1	78286	165	49
S14-40-7013	78286	34	30	S1525-50518-3	78286	165	
S14-40-7013	78286	149	29	S1525-50518-5	78286	165	50
S14-40-7043	78286	34	26	S1525-5052	78286	BULK	
S14-40-7043	78286	149	22	S1525-50520	78286	165	51
S14-40-7103	78286	34	23	S1525-50521	78286	165	47
S14-40-7103	78286	149	24	S1525-50522	78286	165	48
S14-45-1062	78286	114		S1525-50523-2	78286	165	42
S14-45-2037-1	78286	109	14	S1525-50524	78286	165	43
S14-45-2307	78286	50	158	S1525-50525	78286	165	41

REFERENCE NUMBER	MFG CODE	FIG NUMBER	ITEM NUMBER	REFERENCE NUMBER	MFG CODE	FIG NUMBER	ITEM NUMBER
S1525-50529	78286	162	44	S1540-61447	78286	107	36
S1525-50529	78286	165	64	S1540-61447	78286	107	56
S1525-51156	78286	162	26	S1540-61626	78286	104	22
S1525-61026	78286	54	71	S1540-61626	78286	104	54
S1525-61031	78286	54		S1540-61657	78286	104	11
S1525-61034	78286	54	67	S1540-61657	78286	104	43
S1530-61136-3	78286	68	1	S1540-61657	78286	104	70
S1530-61136-4	78286	55	22	S1540-61657	78286	104	86
S1530-61136-4	78286	68		S1540-61682	78286	102	18
S1530-61136-4	78286	68	12	S1540-61684	78286	102	10
S1530-61136-5	78286	68		S1540-61688	78286	102	13
S1530-61136-6	78286	68		S1540-61689	78286	102	8
S1530-80227-1	78286	180	6	S1540-61691	78286	102	21
S1530-80227-2	78286	176	62	S1540-61694	78286	102	26
S1530-80227-2	78286	176	65	S1540-61696	78286	102	29
S1530-80227-2	78286	180	7	S1540-61699	78286	102	1
S1530-80310	78286	172	107	S1540-61704	78286	104	35
S1530-80310	78286	172	109	S1550-61333	78286	118	
S1530-80310	78286	172	111	S1550-63046-5	78286	123	65
S1530-80746	78286	55	10	S1565-20059-1	78286	34	19
S1530-80746	78286	55	17	S1565-20059-1	78286	149	16
S1530-80746	78286	69	9	S1565-20059-2	78286	34	
S1530-90910-3	78286	181		S1565-20059-2	78286	149	35
S1535-20123	78286	25		S1565-20059-5	78286	33	
S1535-20123-1	78286	25		S1565-20059-5	78286	34	
S1535-20123-2	78286	25	20	S1565-20062	78286	34	15
S1535-20124	78286	28	24	S1565-20062	78286	149	5
S1535-20125		KITS		S1565-20064	78286	34	7
S1535-20125	78286	28	23	S1565-20064	78286	149	8
S1535-20127	78286	28	22	S1565-20065	78286	34	16
S1535-20157-1	78286	25		S1565-20065	78286	149	13
S1535-20157-2		KITS		S1565-20066		KITS	
S1535-20157-2	78286	25	19B	S1565-20066	78286	34	8
S1535-20157-2	78286	25	27	S1565-20066	78286	149	9
S1535-20158		KITS		S1565-20078	78286	33	
S1535-20158	78286	25	18	S1565-20087	78286	33	41
S1535-20158-1		KITS		S1565-61195	78286	103	55
S1535-20158-3		KITS		S1565-61366		KITS	
S1535-20158-3	78286	25	19	S1565-61366	78286	103	17
S1535-20158-4		KITS		S1565-61371	78286	103	27
S1535-20158-4	78286	25	19A	S1565-61374	78286	103	
S1535-20170	78286	28	18	S1565-61377	78286	101	43
S1535-20171	78286	25	25	S1565-61388	78286	103	4
S1535-20172	78286	28	26	S1565-61484	78286	103	
S1535-20173-3	78286	25		S1565-61485	78286	103	37
S1535-20173-4	78286	25	16	S1565-61485	78286	103	44
S1535-20173-4	78286	28		S1565-61486		KITS	
S1535-20179	78286	25		S1565-61486	78286	103	33
S1535-20179-1	78286	25	34	S1565-61486	78286	103	45
S1535-20210	78286	26		S1565-61495	78286	103	16
S1535-20210	78286	26	22	S1565-61497	78286	103	21
S1535-20214	78286	25		S1565-61510	78286	103	56
S1535-20214-1	78286	25	21	S1565-61510-1	78286	103	61
S1535-20215-1	78286	25	28	S1565-61510-2	78286	103	57
S1535-20227	78286	29		S1565-61510-3	78286	103	58
S1535-20227	78286	30		S1565-61510-4	78286	103	59
S1535-61126	78286	83	28	S1565-61518	78286	103	12
S1535-61145	78286	83	25	S1565-61520-1		KITS	
S1535-91117	78286	179	16	S1565-61520-1	78286	103	53
S1540-61419	78286	107	47A	S1565-61523		KITS	
S1540-61419	78286	107	71A	S1565-61523	78286	103	50
S1540-61424	78286	107	34	S1565-61526-1	78286	103	
S1540-61424	78286	107	50	S1565-61527	78286	103	31
S1540-61432	78286	107	60	S1565-61528	78286	103	39
S1540-61433	78286	107	62	S1565-61528-1	78286	103	
S1540-61439	78286	107	37	S1565-61544	78286	103	52
S1540-61439	78286	107	58	S1565-61544	78286	103	46
S1540-61440	78286	107		S1565-61562	78286	96	77
S1540-61440-1	78286	107	63	S1565-61563	78286	96	120
S1540-61441	78286	107	52	S1565-61564	78286	96	124
S1540-61446	78286	107	53	S1565-61575	78286	92	22

REFERENCE NUMBER	MFG CODE	FIG NUMBER	ITEM NUMBER	REFERENCE NUMBER	MFG CODE	FIG NUMBER	ITEM NUMBER
S1565-61577		KITS		S1570-10217-1	88369	A3	5
S1565-61577	78286	92	15	S1570-10217-5	78286	A3	6
S1565-61578	78286	92	13	S1570-10229	78286	A3	7
S1565-61580-1	78286	92		S1570-10230	78286	A4	1
S1565-61580-2	78286	92		S1570-10264	78286	A4	2
S1565-61580-4	78286	92	1	S1570-10308	78286	A4	3
S1565-61582		KITS		S1570-10338-11	78286	F1	10
S1565-61582	78286	92	14	S1570-10350	78286	A4	4
S1565-61592	78286	96	76	S1570-10377-4	78286	A4	5
S1565-61605	78286	96		S1570-10616	78286	A5	1
S1565-61614	83369	97		S1570-10750-20	78286	A5	2
S1565-61615	78286	97	1	S1570-21654	78286	F4	3
S1565-61616	78286	97	18	S1605-2148	78286	41	162
S1565-61617	78286	97	26	S1607-1053-1	78286	123	
S1565-61618	78286	96	43	S1607-1053-2	78286	123	
S1565-61618	78286	106	70	S1607-1053-3	78286	123	
S1565-61619	78286	96	35	S1607-1054	78286	123	
S1565-61619	78286	106	11	S1607-1096-2	78286	16	
S1565-61620-1	78286	96	33	S1607-1096-3	78286	16	
S1565-61620-1	78286	106	10	S1607-1097-1	78286	17	
S1565-61622	78286	94	9	S1607-1097-2	78286	17	
S1565-61633	78286	96	73	S1607-1097-2	78286	KITS	
S1565-61633	78286	96	74	S1607-1097-3	78286	17	
S1565-61637	78286	96	55	S1607-1097-3	78286	KITS	
S1565-61637	78286	96	62	S1607-1098-1	78286	12	
S1565-61658	78286	96	54	S1607-1098-1	78286	KITS	
S1565-61659	78286	106	18	S1607-1098-2	78286	12	
S1565-61661	78286	96	37	S1607-1098-2	78286	KITS	
S1565-61664	78286	95	14	S1607-1561-1	78286	38	
S1565-61675	78286	96	79	S1607-1561-1	78286	KITS	
S1565-61679	78286	96	119	S1607-1561-2	78286	38	
S1565-61680-4	78286	96	113	S1607-1561-2	78286	KITS	
S1565-61694	78286	106	35	S1607-2234-10	78286	50	
S1565-61767	78286	95		S1607-2234-11	78286	50	
S1565-61767-1	78286	95	10	S1607-2234-12	78286	50	
S1565-61769	78286	95	9	S1607-2234-4	78286	50	
S1565-61770	78286	95	13	S1607-2234-7	78286	50	
S1565-61778	78286	96	1	S1607-2234-8	78286	50	
S1565-61778-1	78286	96	5	S1607-2234-9	78286	50	
S1565-61791	78286	96		S1607-2281-1	78286	83	
S1565-61792-2	78286	96	29	S1607-2281-2	78286	83	
S1565-61793	78286	96	22	S1607-2281-3	78286	83	
S1565-61794	78286	96	27	S1607-2281-4	78286	83	
S1565-61795	78286	96	6	S1607-2402-4	78286	132	
S1565-61796	78286	96	13	S1607-2407-2	78286	154	
S1565-61796	78286	106		S1607-2407-3	78286	154	
S1565-61796-1	78286	106	58	S1607-2407-4	78286	154	
S1565-61797	78286	94	18	S1607-3601-1	78286	158	
S1565-61797	78286	106	54	S1607-3601-1	78286	KITS	
S1565-61803	78286	96	32	S1607-3601-2	78286	158	
S1565-61803	78286	106	7	S1607-3601-2	78286	KITS	
S1565-61831	78286	33	31	S1607-3602-1	78286	157	
S1565-61831	78286	147	20	S1607-3602-1	78286	KITS	
S1565-61831	70236	148	29	S1607-3602-2	78286	157	
S1565-61875	78286	94		S1607-3602-2	78286	KITS	
S1565-61878-1	78286	106		S1607-3603-1	78286	22	
S1565-61882-3	78286	94		S1607-3603-1	78286	KITS	
S1565-61882-3	78286	106		S1607-3603-2	78286	22	
S1565-61883-3	78286	106		S1607-3603-2	78286	KITS	
S1565-61887-1	78286	96	70	S1607-5576-2	78286	92	
S1565-61892	78286	96		S1607-5576-2	78286	KITS	
S1565-61970-1	78286	101	41	S1607-5577-2	78286	166	
S1565-61970-1	78286	103		S1607-5577-3	78286	166	
S1565-80064-51	78286	181		S1607-5577-4	78286	166	
S1570-10117	78286	A2	4	S1607-5577-4	78286	KITS	
S1570-10140-3	78286	A2	5	S1607-5577-5	78286	166	
S1570-10170-3	78286	A2		S1607-5577-5	78286	KITS	
S1570-10179-1	78286	A2		S1607-5579-2	78286	149	
S1570-10179-5	78286	A2		S1607-5579-2	78286	KITS	
S1570-10179-6	78286	A2	7	S1607-5580-1	78286	164	
S1570-10190	78286	A3	2	S1607-5580-2	78286	164	

REFERENCE NUMBER	MFG CODE	FIG NUMBER	ITEM NUMBER	REFERENCE NUMBER	MFG CODE	FIG NUMBER	ITEM NUMBER
S1607-5580-3	78286	164		S1610-23006-2	78286	16	
S1607-5580-3	78286	KITS		S1610-23006-3	78286	16	62
S1607-5715	78286	50		S1610-23007-4	78286	16	94
S1607-6528-1	78286	100		S1610-23007-5	78286	16	
S1607-6528-1	78286	KITS		S1610-23008	78286	20	
S1607-6528-2	78286	100		S1610-23008-1	78286	20	
S1607-6528-2	78286	KITS		S1610-23008-2	78286	20	6
S1607-6544-2	78286	103		S1610-23010-3	78286	16	45
S1607-6544-2	78286	KITS		S1610-23010-4	78286	16	
S1607-7021	78286	MSUP		S1610-23013-1	78286	16	
S1610-10000-35	78286	11		S1610-23013-2	78286	16	
S1610-10100-5	78286	11		S1610-23013-4	78286	16	37
S1610-20000-16	78286	11	1	S1610-23013-5	78286	16	56
S1610-20000-16	78286	12		S1610-23014	78286	20	
S1610-20000-16X	78286	11		S1610-23014-2	78286	20	3
S1610-20000-8	78286	11		S1610-23015	78286	16	65
S1610-21001	78286	12		S1610-23016	78286	18	
S1610-21001-1	78286	12	1	S1610-23016-2	78286	18	
S1610-21003		KITS		S1610-23016-3	78286	18	27
S1610-21003	78286	16	71	S1610-23017	78286	20	
S1610-21007	78286	12		S1610-23017-1		KITS	
S1610-21007-1	78286	12	9	S1610-23017-1	78286	20	
S1610-21010	78286	12	19	S1610-23017-2		KITS	
S1610-21016-1		KITS		S1610-23017-2	78286	20	4
S1610-21016-1	78286	12	15	S1610-23018	78286	16	14
S1610-21017	78286	12	16	S1610-23020	78286	16	
S1610-21018		KITS		S1610-23020-1	78286	16	
S1610-21018	78286	12	18	S1610-23020-3	78286	16	16
S1610-21019	78286	16	15	S1610-23024		KITS	
S1610-21021		KITS		S1610-23024	78286	20	8
S1610-21021	78286	12	13	S1610-23027	78286	18	
S1610-21022	78286	18	28	S1610-23027-1	78286	18	
S1610-21031-1	78286	21	5	S1610-23027-2	78286	18	25
S1610-21032	78286	12		S1610-23029	78286	18	8
S1610-21032-2	78286	12		S1610-23030		KITS	
S1610-21032-4	78286	12	43	S1610-23030	78286	18	7
S1610-21032-5	78286	12		S1610-23031	78286	18	6
S1610-21033	78286	12		S1610-23032	78286	20	14
S1610-21033-2	78286	12	68	S1610-23033	78286	19	
S1610-21056	78286	12		S1610-23033-1	78286	19	33
S1610-21056-1	78286	12	69	S1610-23034		KITS	
S1610-21058	78286	12	73	S1610-23034	78286	18	13
S1610-21059	78286	12	74	S1610-23035	78286	16	
S1610-21069	78286	12		S1610-23038-1	78286	16	12
S1610-21071-2	78286	16		S1610-23038-2	78286	16	
S1610-21071-5	78286	16		S1610-23039		KITS	
S1610-21071-6	78286	16		S1610-23039	78286	16	59
S1610-21073	78286	12	72	S1610-23043-3	78286	16	48
S1610-21082		KITS		S1610-23043-4	78286	16	
S1610-21082	78286	16	31	S1610-23044-1	78286	16	
S1610-21083		KITS		S1610-23044-2	78286	16	
S1610-21083	78286	16	88	S1610-23045		KITS	
S1610-21086		KITS		S1610-23045	78286	12	
S1610-21086	78286	12	5	S1610-23046		KITS	
S1610-21087		KITS		S1610-23046	78286	16	42
S1610-21087	78286	12	4	S1610-23046	78286	16	61
S1610-21171-1	78286	16	23	S1610-23048-2	78286	18	
S1610-21171-2	78286	16	27	S1610-23048-2	78286	19	
S1610-21171-5		KITS		S1610-23048-3	78286	19	
S1610-21171-5	78286	16	79	S1610-23048-5	78286	18	14
S1610-21171-6		KITS		S1610-23048-5	78286	19	
S1610-21171-6	78286	16	73	S1610-23048-6	78286	19	31
S1610-21171-6	78286	16	83	S1610-23049	78286	18	
S1610-23000-8	78286	12	75	S1610-23049-3	78286	18	9
S1610-23000-8	78286	16		S1610-23050	78286	16	
S1610-23001	78286	16		S1610-23050-1	78286	16	
S1610-23001-1	78286	16		S1610-23050-2	78286	16	
S1610-23001-2	78286	16	78	S1610-23050-3	78286	16	
S1610-23003	78286	16	17	S1610-23050-4	78286	16	19
S1610-23004	78286	20	9	S1610-23050-4	78286	18	
S1610-23006	78286	16		S1610-23053	78286	18	17

REFERENCE NUMBER	MFG CODE	FIG NUMBER	ITEM NUMBER	REFERENCE NUMBER	MFG CODE	FIG NUMBER	ITEM NUMBER
S1610-23055	78286	18	20	S1610-23184-1		KITS	
S1610-23057	78286	18	10	S1610-23184-1	78286	16	
S1610-23058		KITS		S1610-23184-1	78286	16	102
S1610-23058	78286	18	11	S1610-23184-2		KITS	
S1610-23059	78286	18		S1610-23184-2	78286	16	
S1610-23059-1		KITS		S1610-23198	78286	16	1
S1610-23059-1	78286	18	12	S1610-24000-1	78286	12	
S1610-23061	78286	19		S1610-24000-4	78286	12	
S1610-23061-1	78286	19		S1610-24000-6	78286	12	76
S1610-23061-2	78286	19	6	S1610-24000-6	78286	21	
S1610-23062	78286	19	9A	S1610-24001-3	78286	21	
S1610-23063	78286	19		S1610-24001-5	78286	21	34
S1610-23063-1	78286	19		S1610-24001-6	78286	21	
S1610-23063-4	78286	19	9	S1610-24001-9	78286	21	4
S1610-23064	78286	19	8	S1610-24003	78286	21	
S1610-23065		KITS		S1610-24003-2	78286	21	35
S1610-23065	78286	16		S1610-24004	78286	21	
S1610-23066		KITS		S1610-24004-1	78286	21	7
S1610-23066	78286	19	7	S1610-24005	78286	21	
S1610-23067	78286	19		S1610-24005-1	78286	21	10
S1610-23067-1	78286	19	2	S1610-24006-1	78286	21	11
S1610-23081	78286	16	20	S1610-24006-1	78286	21	13
S1610-23081-1	78286	16		S1610-24007-1		KITS	
S1610-23086	78286	18		S1610-24007-3		KITS	
S1610-23086-2	78286	18	3	S1610-24007-3	78286	21	8
S1610-23087	78286	18	19	S1610-24007-4		KITS	
S1610-23093-1	78286	16	47	S1610-24007-4	78286	21	9
S1610-23093-1	78286	16	96	S1610-24009-1	78286	21	45
S1610-23094	78286	16	46	S1610-24012	78286	21	
S1610-23094	78286	16	95	S1610-24012-1	78286	21	
S1610-23096		KITS		S1610-24012-2	78286	21	
S1610-23096	78286	16	39	S1610-24012-4	78286	21	62
S1610-23096-1	78286	16		S1610-24012-5	78286	21	40
S1610-23097	78286	16	38	S1610-24015-1	78286	21	63
S1610-23098		KITS		S1610-24017	78286	21	
S1610-23098	78286	16	58	S1610-24017-1	78286	21	43
S1610-23099	78286	16	57	S1610-24020	78286	21	
S1610-23121-2	78286	20		S1610-24020-1	78286	21	22
S1610-23121-2	78286	16	104	S1610-24020-1	78286	21	51
S1610-23135-1	78286	16	10	S1610-24021	78286	21	
S1610-23135-2	78286	16		S1610-24021-1	78286	21	
S1610-23173-1		KITS		S1610-24021-2	78286	21	27
S1610-23173-1	78286	19	34	S1610-24021-2	78286	21	56
S1610-23173-2		KITS		S1610-24022	78286	21	
S1610-23173-2	78286	19	35	S1610-24022-1	78286	21	32
S1610-23174-2		KITS		S1610-24022-1	78286	21	61
S1610-23174-2	78286	19	36	S1610-24025-1	78286	21	2
S1610-23175-1		KITS		S1610-24028		KITS	
S1610-23175-1	78286	19	37	S1610-24028		KITS	
S1610-23175-2		KITS		S1610-24028	78286	17	2
S1610-23175-2	78286	19	38	S1610-24028	78286	21	21
S1610-23176	78286	16	98	S1610-24028	78286	21	50
S1610-23177		KITS		S1610-24029	78286	21	25
S1610-23177	78286	16	50	S1610-24029	78286	21	54
S1610-23178		KITS		S1610-24031-1		KITS	
S1610-23178	78286	16	99	S1610-24031-1	78286	21	14
S1610-23179		KITS		S1610-24034	78286	21	
S1610-23179	78286	16	49	S1610-24034-1	78286	21	41
S1610-23180		KITS		S1610-24035	78286	12	
S1610-23180	78286	16		S1610-24035-2	78286	12	65
S1610-23180	78286	16	103	S1610-24035-2	78286	13	
S1610-23181-1	78286	16		S1610-24036	78286	12	
S1610-23181-2		KITS		S1610-24036-1		KITS	
S1610-23181-2	78286	16	100	S1610-24036-2		KITS	
S1610-23182-1		KITS		S1610-24036-2	78286	12	
S1610-23182-1	78286	16	52	S1610-24036-2	78286	13	2
S1610-23182-2		KITS		S1610-24036-2	78286	14	2
S1610-23182-2	78286	16	87	S1610-24037-1	78286	23	4
S1610-23183		KITS		S1610-24037-4	78286	23	5
S1610-23183	78286	16	51	S1610-24040	78286	16	
S1610-23183-2		KITS		S1610-24043	78286	13	4

REFERENCE NUMBER	MFG CODE	FIG NUMBER	ITEM NUMBER	REFERENCE NUMBER	MFG CODE	FIG NUMBER	ITEM NUMBER
S1610-24044	78286	13	6	S1610-25081-1	78286	12	30
S1610-24047	78286	13		S1610-25081-2	78286	12	31
S1610-24047-1	78286	13		S1610-25083-1	78286	12	
S1610-24047-2	78286	13	3	S1610-25083-2	78286	12	
S1610-24049	78286	13		S1610-25083-3	78286	12	37
S1610-24049-1	78286	13		S1610-25086	78286	20	15
S1610-24049-3	78286	13	8	S1610-25087	78286	12	32
S1610-24050-4	78286	12	38	S1610-25088-1		KITS	
S1610-24050-4	78286	14		S1610-25088-1	78286	12	28
S1610-24051	78286	14		S1610-26000	78286	16	
S1610-24051-2	78286	14		S1610-26000-1	78286	16	
S1610-24051-4	78286	14	10	S1610-26000-2	78286	16	
S1610-24052	78286	14		S1610-26000-3	78286	16	
S1610-24052-1	78286	14	16	S1610-26000-4	78286	16	13
S1610-24055-1	78286	14		S1610-26000-4	78286	17	
S1610-24055-3	78286	14		S1610-26001-1	78286	17	
S1610-24055-4	78286	14	3	S1610-26001-2	78286	17	48
S1610-24056	78286	14		S1610-26002	78286	17	42
S1610-24056-1	78286	14		S1610-26003-1	78286	17	
S1610-24056-2	78286	14	9	S1610-26003-2	78286	17	40
S1610-24058	78286	14		S1610-26004-1	78286	17	
S1610-24058	78286	14	4	S1610-26004-2	78286	17	36
S1610-24060	78286	21	19	S1610-26005	78286	17	36A
S1610-24061	78286	21	15	S1610-26011-1	78286	16	6
S1610-24063	78286	13	10	S1610-26012-1	78286	16	9
S1610-24064	78286	13	11	S1610-26016	78286	17	
S1610-24065		KITS		S1610-26016-1	78286	17	44
S1610-24065	78286	12		S1610-26016-1	78286	17	45
S1610-24071-1		KITS		S1610-26022	78286	17	
S1610-24071-1	78286	21	47	S1610-26022-2	78286	17	20
S1610-24072-1		KITS		S1610-26024	78286	17	1
S1610-24072-1	78286	16	70	S1610-26033-1	78286	16	8
S1610-24072-1	78286	21	3	S1610-26034-1		KITS	
S1610-24080	78286	16	72	S1610-26034-1	78286	17	27
S1610-24083		KITS		S1610-26035		KITS	
S1610-24083	78286	12	41	S1610-26037-1	78286	16	2
S1610-24084		KITS		S1610-26050-4		KITS	
S1610-24084	78286	12	42	S1610-26050-4	78286	17	38
S1610-24085	78286	14	5	S1610-26059-1	78286	16	5
S1610-24086		KITS		S1610-26060-1	78286	16	3
S1610-24087-1		KITS		S1610-26063	78286	17	
S1610-24087-1	78286	14	6	S1610-26063-2	78286	17	26
S1610-24087-2		KITS		S1610-26071	78286	12	52
S1610-24087-2	78286	14	7	S1610-26072	78286	12	51
S1610-24087-2	78286	14	8	S1610-26073-1	78286	12	
S1610-24087-3		KITS		S1610-26073-2	78286	12	
S1610-24087-3	78286	13	13	S1610-26075	78286	12	
S1610-24087-3	78286	14		S1610-26075-2	78286	12	54
S1610-24089		KITS		S1610-26076	78286	12	53
S1610-24089	78286	13	7	S1610-26077		KITS	
S1610-24090		KITS		S1610-26077	78286	17	22
S1610-24090	78286	13	5	S1610-26077	78286	17	5
S1610-24090	78286	14		S1610-26082	78286	12	50
S1610-24093		KITS		S1610-30100-17	78286	38	
S1610-24093	78286	21	37	S1610-31001		KITS	
S1610-24094		KITS		S1610-31001	78286	38	47
S1610-24094	78286	21	64	S1610-31002	78286	38	44
S1610-25000-1	78286	12		S1610-31003		KITS	
S1610-25000-2	78286	12	21	S1610-31003	78286	38	46
S1610-25000-2	78286	15		S1610-31100-19	78286	38	31
S1610-25001	78286	15	4	S1610-31100-20	78286	38	
S1610-25001-1	78286	15		S1610-33000-2	78286	38	62
S1610-25002-1	78286	15		S1610-33002		KITS	
S1610-25003-2	78286	15	6	S1610-33002	78286	38	66
S1610-25043	78286	15	3	S1610-33003-2	78286	38	70
S1610-25064	78286	12	25	S1610-33107	78286	38	53
S1610-25072		KITS		S1610-33109	78286	38	59
S1610-25072	78286	12	24	S1610-33110	78286	38	54
S1610-25075	78286	12		S1610-33111		KITS	
S1610-25075-1		KITS		S1610-33111	78286	38	60
S1610-25075-1	78286	12	26	S1610-33112-1	78286	38	43

REFERENCE NUMBER	MFG CODE	FIG NUMBER	ITEM NUMBER	REFERENCE NUMBER	MFG CODE	FIG NUMBER	ITEM NUMBER
S1610-33114	78286	38	56	S1615-20038-20	78286	37	
S1610-33115		KITS		S1615-20038-3	78286	37	
S1610-33115	78286	38	55	S1615-20038-4	78286	37	
S1610-33205	78286	38	61	S1615-20038-5	78286	37	
S1610-34000	78286	38		S1615-20038-6	78286	37	
S1610-34001	78286	158		S1615-20038-7	78286	37	
S1610-34003	78286	38	1	S1615-20038-8	78286	37	
S1610-34003	78286	38	12	S1615-20038-9	78286	37	
S1610-34003-1	78286	38	10	S1615-20039	78286	37	10
S1610-34003-1	78286	38	18	S1615-20041	78286	37	
S1610-34003-10	78286	38		S1615-20100	78286	37	
S1610-34003-2	78286	38	17	S1615-20100-1	78286	37	
S1610-34003-2	78286	38	9	S1615-20101	78286	37	
S1610-34003-3	78286	38	15	S1615-20102-1	78286	37	
S1610-34003-3	78286	38	7	S1615-20126	78286	A3	3
S1610-34004	78286	158		S1615-20126T20-17	78286	A9	5
S1610-34004-1	78286	158		S1615-20128-1	78286	37	33
S1610-34004-2	78286	158	14	S1615-20134-1	78286	37	
S1610-34005	78286	38	3	S1615-20135-1	78286	37	
S1610-34005	78286	38	5	S1615-20136-1	78286	37	
S1610-34006	78286	158	17	S1615-20136-2	78286	37	
S1610-34103	78286	38		S1615-20136-3	78286	37	
S1610-34105	78286	38	29	S1615-30007	78286	38	39
S1610-34106	78286	38	22	S1615-30014-1		KITS	
S1610-34107	78286	38	26	S1615-30014-1	78286	38	34
S1610-34108	78286	38		S1615-30014-2		KITS	
S1610-34109	78286	38		S1615-30014-2	78286	38	35
S1610-34200	78286	38	11	S1615-30100-2	78286	38	
S1610-34200-1	78286	38	19	S1615-30100-4	78286	38	32
S1610-34201	78286	38	30	S1615-30101-1	78286	38	38
S1610-34203	78286	38	23	S1615-30113-4		KITS	
S1615-20000	78286	37		S1615-30113-4	78286	38	37
S1615-20000-1	78286	37		S1615-30113-5	78286	38	36
S1615-20002-1	78286	37	34	S1620-61004	78286	49	
S1615-20002-2	78286	37	35	S1620-61004-1	78286	49	55A
S1615-20002-3	78286	37	36	S1620-61005	78286	49	60
S1615-20002-5	78286	37	37	S1620-61005-1	78286	49	
S1615-20002-5	78286	37	38	S1620-61005-10	78286	49	68
S1615-20003	78286	37	14	S1620-61006	78286	49	
S1615-20004	78286	37	16	S1620-61006-1	78286	49	
S1615-20006	78286	37	42	S1620-61007	78286	49	
S1615-20007	78286	37	5	S1620-61007-1	78286	49	
S1615-20008	78286	37		S1620-61020-1	78286	49	
S1615-20008-1	78286	37	27	S1620-61020-17	78286	49	
S1615-20009	78286	37		S1620-61020-18	78286	49	
S1615-20014	78286	37	7	S1620-61020-2	78286	49	
S1615-20016-2	78286	37		S1620-61020-20	78286	49	7
S1615-20021	78286	37	29	S1620-61020-23	78286	49	1
S1615-20022	78286	37	30	S1620-61020-24	78286	49	8
S1615-20023-1	78286	37		S1620-61020-27	78286	118	103
S1615-20024	78286	37	20	S1620-61020-27	78286	119	48
S1615-20024-2	78286	37		S1620-61022	78286	49	125
S1615-20025	78286	37	1	S1620-61026-1	78286	49	123
S1615-20029	78286	37	39	S1620-61026-2	78286	49	
S1615-20029-1	78286	37		S1620-61027-1	78286	42	
S1615-20029-2	78286	37		S1620-61027-10	78286	42	
S1615-20030-1	78286	37		S1620-61027-2	78286	42	
S1615-20036	78286	37	4	S1620-61027-3	78286	42	
S1615-20037	78286	37	12	S1620-61027-4	78286	42	
S1615-20038-1	78286	37		S1620-61027-9	78286	42	48
S1615-20038-10	78286	37		S1620-61048-1	78286	41	63
S1615-20038-11	78286	37		S1620-61048-2	78286	41	57
S1615-20038-12	78286	37		S1620-61048-4	78286	41	53
S1615-20038-13	78286	37		S1620-61048-5	78286	41	
S1615-20038-14	78286	37		S1620-61049-1	78286	50	
S1615-20038-15	78286	37		S1620-61060-1	78286	50	
S1615-20038-16	78286	37		S1620-61060-2	78286	50	358
S1615-20038-17	78286	37		S1620-61065-24	78286	50	319
S1615-20038-18	78286	37		S1620-61066-3	78286	50	328
S1615-20038-19	78286	37		S1620-61075-1	78286	51	22
S1615-20038-2	78286	37		S1620-61075-2	78286	52	

REFERENCE NUMBER	MFG CODE	FIG NUMBER	ITEM NUMBER	REFERENCE NUMBER	MFG CODE	FIG NUMBER	ITEM NUMBER
S1620-61076-3	78286	50		S1620-61201-42	78286	48	
S1620-61080-4	78286	50		S1620-61201-44	78286	48	45
S1620-61080-6	78286	50		S1620-61201-9	78286	48	
S1620-61100-11	78286	41		S1620-61203	78286	48	
S1620-61100-6	78286	40	13	S1620-61203-2	78286	48	
S1620-61100-6	78286	41		S1620-61203-25	78286	48	
S1620-61100-7	78286	41	213	S1620-61203-31	78286	48	7
S1620-61100-7	78286	50		S1620-61203-32	78286	48	9
S1620-61106-23	78286	50		S1620-61203-4	78286	48	
S1620-61117-1	78286	50		S1620-61203-5	78286	48	6A
S1620-61117-5	78286	50		S1620-61203-6	78286	48	5
S1620-61123-1	78286	50		S1620-61204	78286	48	
S1620-61123-2	78286	50		S1620-61204-1	78286	48	24
S1620-61123-5	78286	50		S1620-61204-14	78286	48	21
S1620-61123-6	78286	50		S1620-61204-15	78286	48	19
S1620-61123-7	78286	50		S1620-61204-2	78286	48	25
S1620-61123-8	78286	50		S1620-61204-4	78286	48	28
S1620-61128-5	78286	50		S1620-61204-5	78286	48	22
S1620-61128-6	78286	50		S1620-61204-6	78286	48	26
S1620-61131-8	78286	50		S1620-61205-13	78286	41	206
S1620-61131-9	78286	50		S1620-61205-19	78286	41	
S1620-61132-13	78286	50		S1620-61205-21	78286	41	
S1620-61132-14	78286	50		S1620-61205-22	78286	41	205A
S1620-61132-5	78286	50	285	S1620-61205-4	78286	41	209
S1620-61132-7	78286	50	287	S1620-61206	78286	41	
S1620-61133-10	78286	50	382	S1620-61206-1	78286	41	117
S1620-61133-2	78286	50		S1620-61206-2	78286	41	118
S1620-61133-4	78286	50		S1620-61210-1	78286	41	210
S1620-61133-9	78286	50	267	S1620-61210-6	78286	41	207
S1620-61137-7	78286	50		S1620-61211	78286	41	
S1620-61139-10	78286	50	305	S1620-61211-2	78286	41	200
S1620-61139-10	78286	52		S1620-61212-1	78286	47	
S1620-61139-11	78286	53		S1620-61212-4	78286	41	187
S1620-61139-7	78286	51		S1620-61212-4	78286	47	
S1620-61139-8	78286	52		S1620-61212-6	78286	47	14
S1620-61139-9	78286	50	212	S1620-61214-11	78286	41	
S1620-61139-9	78286	51		S1620-61214-11	78286	41	
S1620-61141-2	78286	50	314	S1620-61214-13	78286	41	158
S1620-61141-3	78286	50	318	S1620-61214-2	78286	41	
S1620-61141-4	78286	50		S1620-61219	78286	41	
S1620-61160-10	78286	50	98	S1620-61219-4	78286	41	199
S1620-61167	78286	50		S1620-61220	78286	41	
S1620-61172	78286	50	199	S1620-61220-1	78286	41	159
S1620-61174-2	78286	52	36	S1620-61221-1	78286	41	163
S1620-61176	78286	50	197	S1620-61230-1	78286	50	204
S1620-61182-36	78286	41		S1620-61230-2	78286	50	
S1620-61182-40	78286	41		S1620-61231-4	78286	50	161
S1620-61182-5	78286	41	188	S1620-61231-5	78286	50	163
S1620-61187-11	78286	50	200	S1620-61248-6	78286	48	
S1620-61188	78286	50	202	S1620-61250-3	78286	51	18
S1620-61189-10	78286	82	59	S1620-61250-4	78286	52	40
S1620-61189-4	78286	82	65	S1620-61250-5	78286	51	11
S1620-61189-4	78286	82	69	S1620-61250-6	78286	52	46
S1620-61189-4	78286	151	4	S1620-61255-2	78286	52	7
S1620-61189-7	78286	151	8	S1620-61256-2	78286	52	4
S1620-61189-8	78286	50	191	S1620-61258	78286	52	25
S1620-61189-8	78286	82	60	S1620-61259-3	78286	52	12
S1620-61194-2	78286	36	34	S1620-61259-4	78286	52	30
S1620-61196	78286	50		S1620-61261-2	78286	52	22
S1620-61201	78286	41	128	S1620-61264	78286	36	
S1620-61201	78286	48		S1620-61265-1	78286	36	
S1620-61201-1	78286	48	4	S1620-61265-2	78286	36	
S1620-61201-17	78286	48	40	S1620-61266	78286	36	5
S1620-61201-19	78286	48	1	S1620-61283	78286	41	
S1620-61201-23	78286	48	34	S1620-61283-1	78286	41	108
S1620-61201-24	78286	48	33	S1620-61283-8	78286	41	
S1620-61201-30	78286	48	3	S1620-61287	78286	132	2
S1620-61201-31	78286	48	11	S1620-61294	78286	48	18
S1620-61201-40	78286	48	44	S1620-61295	78286	50	
S1620-61201-41	78286	47		S1620-61295	78286	52	
S1620-61201-41	78286	48		S1620-61295-2	78286	52	53

REFERENCE NUMBER	MFG CODE	FIG NUMBER	ITEM NUMBER	REFERENCE NUMBER	MFG CODE	FIG NUMBER	ITEM NUMBER
S1620-61295-3	78286	50	369	S1620-61416-2	78286	49	
S1620-61295-3	78286	52	51	S1620-61416-20	78286	49	
S1620-61297	78286	41	127	S1620-61416-21	78286	49	
S1620-61298-5	78286	41	125	S1620-61416-22	78286	49	
S1620-61298-6	78286	41		S1620-61416-23	78286	49	
S1620-61298-7	78286	41		S1620-61416-24	78286	49	
S1620-61300-10	78286	50	130	S1620-61416-25	78286	49	
S1620-61300-12	78286	50	128	S1620-61416-26	78286	49	
S1620-61300-4	78286	50	132	S1620-61416-3	78286	49	
S1620-613161-1	78286	150		S1620-61416-4	78286	49	
S1620-61323-8	78286	50		S1620-61416-5	78286	49	
S1620-61337-7	78286	50		S1620-61416-6	78286	49	
S1620-61338-1	78286	50	206	S1620-61416-9	78286	49	
S1620-61339	78286	50	210	S1620-61420-1	78286	49	
S1620-61348-2	78286	49		S1620-61444-1	78286	49	
S1620-61348-4	78286	49		S1620-61444-2	78286	49	
S1620-61352-1	78286	150		S1620-61444-3	78286	49	
S1620-61352-10	78286	50		S1620-61444-4	78286	49	
S1620-61352-2	78286	150		S1620-61445-1	78286	49	
S1620-61353-1	78286	150		S1620-61445-4	78286	49	
S1620-61353-11	78286	50		S1620-61446-3	78286	49	
S1620-61391-10	78286	50		S1620-61450-1	78286	49	
S1620-61391-8	78286	50		S1620-61450-2	78286	49	
S1620-61391-9	78286	50		S1620-61453-1	78286	49	85
S1620-61392-1	78286	50		S1620-61453-2	78286	49	
S1620-61392-25	78286	50		S1620-61454	78286	49	86
S1620-61392-25	78286	50	24	S1620-61456	78286	49	
S1620-61392-29	78286	50	13	S1620-61457	78286	49	
S1620-61392-3	78286	50	5	S1620-61498-2	78286	49	
S1620-61392-30	78286	50		S1620-61500-1	78286	50	165
S1620-61392-31	78286	50	16	S1620-61500-10	78286	50	186
S1620-61392-4	78286	50	6	S1620-61500-11	78286	50	188
S1620-61392-6	78286	50		S1620-61500-13	78286	50	
S1620-61392-7	78286	50	8	S1620-61500-14	78286	50	
S1620-61392-8	78286	50		S1620-61500-15	78286	50	174
S1620-61406-1	78286	49		S1620-61500-3	78286	50	169
S1620-61406-19	78286	49	49	S1620-61500-4	78286	50	170
S1620-61406-25	78286	49		S1620-61500-5	78286	50	171
S1620-61406-25	78286	49	50	S1620-61500-7	78286	50	187
S1620-61406-26	78286	49		S1620-61500-8	78286	50	184
S1620-61406-27	78286	49	48	S1620-61500-9	78286	50	185
S1620-61406-3	78286	49		S1620-61501-13	78286	50	46
S1620-61406-5	78286	49		S1620-61501-15	78286	50	167
S1620-61406-6	78286	49		S1620-61501-16	78286	50	172
S1620-61406-7	78286	49		S1620-61501-6	78286	50	183
S1620-61406-9	78286	49	39	S1620-61501-9	78286	50	
S1620-61410-1	78286	49		S1620-61502-1	78286	50	
S1620-61412-1	78286	49		S1620-61502-3	78286	50	
S1620-61412-17	78286	49		S1620-61502-5	78286	50	
S1620-61412-18	78286	49		S1620-61506	78286	39	35
S1620-61412-2	78286	49		S1620-61506	78286	40	
S1620-61412-3	78286	49		S1620-61513	78286	39	
S1620-61412-4	78286	49		S1620-61514	78286	150	87
S1620-61412-7	78286	49		S1620-61516	78286	150	90
S1620-61412-8	78286	49		S1620-61525-1	78286	150	
S1620-61414-5	78286	145		S1620-61526-2	78286	150	
S1620-61414-6	78286	49		S1620-61539-2	78286	47	11
S1620-61415-5	78286	49		S1620-61539-2	78286	47	8
S1620-61415-7	78286	49		S1620-61544	78286	52	49
S1620-61416	78286	49		S1620-61544-4	78286	50	362
S1620-61416-1	78286	49		S1620-61545	78286	36	27
S1620-61416-1	78286	49		S1620-61546	78286	52	
S1620-61416-10	78286	49		S1620-61550	78286	50	
S1620-61416-12	78286	49		S1620-61550-1	78286	50	59
S1620-61416-13	78286	49		S1620-61550-2	78286	50	50
S1620-61416-14	78286	49		S1620-61550-3	78286	50	55
S1620-61416-15	78286	49		S1620-61550-4	78286	50	
S1620-61416-16	78286	49		S1620-61550-5	78286	50	53
S1620-61416-17	78286	49		S1620-61551	78286	41	
S1620-61416-18	78286	49		S1620-61551-2	78286	41	90
S1620-61416-19	78286	49		S1620-61551-8	78286	41	84

REFERENCE NUMBER	MFG CODE	FIG NUMBER	ITEM NUMBER	REFERENCE NUMBER	MFG CODE	FIG NUMBER	ITEM NUMBER
S1620-61552	78286	41	89	S1620-61714-1	78286	42	
S1620-61561-1	78286	150	39	S1620-61714-3	78286	42	
S1620-61562-1	78286	150	41	S1620-61715-1	78286	42	42
S1620-61563	78286	50		S1620-61715-11	78286	42	36
S1620-61566-1	78286	50		S1620-61715-12	78286	42	
S1620-61566-2	78286	50		S1620-61715-13	78286	42	20
S1620-61566-3	78286	50		S1620-61715-15	78286	42	27
S1620-61566-7	78286	50		S1620-61715-16	78286	42	
S1620-61570-2	78286	75	3	S1620-61715-17	78286	42	29
S1620-61599-6	78286	41		S1620-61715-18	78286	42	
S1620-61599-7	78286	41		S1620-61715-25	78286	42	46
S1620-61599-8	78286	53	4	S1620-61715-26	78286	42	44
S1620-61602-1	78286	41		S1620-61715-28	78286	42	37
S1620-61602-13	78286	41		S1620-61715-9	78286	42	10
S1620-61602-19	78286	41	3	S1620-61716	78286	42	8
S1620-61602-20	78286	41	4	S1620-61717	78286	42	23
S1620-61602-31	78286	41	6	S1620-61719-1	78286	42	
S1620-61602-32	78286	41		S1620-61719-2	78286	42	
S1620-61602-33	78286	41	5	S1620-61720	78286	42	17
S1620-61602-7	78286	41		S1620-61721-3	78286	50	260
S1620-61603-5	78286	41		S1620-61721-6	78286	50	387
S1620-61605	78286	41		S1620-61724	78286	42	13
S1620-61612	78286	41		S1620-61761	78286	50	376
S1620-61612-11	78286	41	30	S1620-61780	78286	50	
S1620-61613	78286	41		S1620-61780-1	78286	50	247
S1620-61613-1	78286	41	168	S1620-61781	78286	50	
S1620-61613-2	78286	41		S1620-61802-12	78286	43	
S1620-61617	78286	41		S1620-61802-15	78286	43	74D
S1620-61645-40	78286	41	156	S1620-61802-16	78286	43	74C
S1620-61645-42	78286	41		S1620-61802-17	78286	43	74F
S1620-61645-5	78286	41	149	S1620-61802-19	78286	43	
S1620-61645-52	78286	41		S1620-61822	78286	146	36
S1620-61646-10	78286	41		S1620-61822-2	78286	146	39
S1620-61668-1	78286	50	372	S1620-61823	78286	146	5
S1620-61668-2	78286	50	374	S1620-61824	78286	146	3
S1620-61694	78286	150	51	S1620-61835-1	78286	105	3
S1620-61694	78286	150	67	S1620-61835-2	78286	105	4
S1620-61694	78286	150	69	S1620-61835-3	78286	105	1
S1620-61694	78286	150	75	S1620-61841-10	78286	41	11
S1620-61695	78286	50	303	S1620-61845-2	78286	50	41
S1620-61696-2	78286	50	301	S1620-61852-10	78286	50	96
S1620-61698	78286	50	275	S1620-61852-11	78286	50	94
S1620-61700-6	78286	41	1	S1620-61852-2	78286	50	91
S1620-61700-6	78286	42		S1620-61854	78286	41	
S1620-61701-1	78286	42		S1620-61855-1	78286	49	
S1620-61701-17	78286	42		S1620-61860	78286	41	
S1620-61701-2	78286	42		S1620-61860-2	78286	41	24
S1620-61701-3	78286	42		S1620-61860-3	78286	41	20
S1620-61701-7	78286	42	79	S1620-61860-4	78286	41	22
S1620-61701-8	78286	42	77	S1620-61867-10	78286	50	
S1620-61702	78286	42		S1620-61867-12	78286	50	
S1620-61702-1	78286	42		S1620-61869-1	78286	50	
S1620-61702-2	78286	42		S1620-61869-11	78286	50	125
S1620-61702-23	78286	42		S1620-61869-15	78286	50	121
S1620-61702-25	78286	42		S1620-61869-16	78286	50	117
S1620-61702-3	78286	42		S1620-61869-17	78286	50	134
S1620-61702-7	78286	42		S1620-61869-23	78286	50	
S1620-61702-8	78286	42		S1620-61869-26	78286	50	115
S1620-61703-2	78286	50		S1620-61869-33	78286	50	106
S1620-61703-3	78286	50		S1620-61869-35	78286	50	
S1620-61703-4	78286	50		S1620-61869-44	78286	50	114
S1620-61704-1	78286	50	257	S1620-61869-48	78286	50	
S1620-61704-2	78286	50	388	S1620-61869-9	78286	50	124
S1620-61705-1	78286	50	262	S1620-61870	78286	50	
S1620-61705-2	78286	50	383	S1620-61871-25	78286	50	50
S1620-61707-1	78286	42	54	S1620-61871-35	78286	50	
S1620-61707-2	78286	42		S1620-61871-42	78286	50	
S1620-61708-1	78286	42	52	S1620-61872-38	78286	50	
S1620-61708-2	78286	42		S1620-61874	78286	50	
S1620-61711-73	78286	42		S1620-61875	78286	50	213
S1620-61713-25	78286	42		S1620-61876-1	78286	51	4

REFERENCE NUMBER	MFG CODE	FIG NUMBER	ITEM NUMBER	REFERENCE NUMBER	MFG CODE	FIG NUMBER	ITEM NUMBER
S1620-61876-1	78286	53		S1620-62005-5	78286	49	
S1620-61876-2	78286	52	37A	S1620-62005-6	78286	49	
S1620-61876-2	78286	53		S1620-62007-1	78286	49	
S1620-61884	78286	41	121	S1620-62007-2	78286	49	
S1620-61884-3	78286	41		S1620-62050-1	78286	49	84
S1620-61885-2	78286	50	354	S1620-62050-2	78286	49	
S1620-61890	78286	49		S1620-62095-1	78286	49	
S1620-61890-1	78286	49	24	S1620-62095-11	78286	49	
S1620-61890-1	78286	49	35	S1620-62095-2	78286	49	
S1620-61890-10	78286	49	37	S1620-62095-3	78286	49	55
S1620-61890-2	78286	49	31	S1620-62095-4	78286	49	
S1620-61890-3	78286	49	29	S1620-62102-11	78286	49	
S1620-61890-4	78286	49	26	S1620-62103	78286	49	
S1620-61890-5	78286	49	21	S1620-62103-1	78286	49	
S1620-61890-6	78286	49	18	S1620-62103-2	78286	49	
S1620-61890-7	78286	49	16	S1620-62103-3	78286	49	
S1620-61890-8	78286	49	14	S1620-62103-4	78286	49	
S1620-61890-9	78286	49		S1620-62103-5	78286	49	73
S1620-61891-3	78286	50	292	S1620-62103-6	78286	49	
S1620-61891-3	78286	50	379	S1620-62103-7	78286	49	71
S1620-61891-4	78286	50	294	S1620-62103-8	78286	49	72
S1620-61891-4	78286	50	381	S1620-62162	78286	76	23
S1620-61891-8	78286	115	52	S1620-62162	78286	76	62
S1620-61894	78286	47	16	S1620-62302	78286	41	212
S1620-61904-4	78286	50	365	S1620-62302	78286	49	
S1620-61904-7	78286	50		S1620-62302-1	78286	49	
S1620-61925-13	78286	49		S1620-62304-14	78286	49	
S1620-61928-1	78286	50		S1620-62310	78286	49	
S1620-61928-23	78286	50		S1620-62311-1	78286	49	
S1620-61928-37	78286	50		S1620-62311-10	78286	49	
S1620-61928-38	78286	50		S1620-62311-11	78286	49	93
S1620-61930	78286	41		S1620-62311-12	78286	49	
S1620-61930-1	78286	41	204	S1620-62311-13	78286	49	99
S1620-61930-2	78286	41	205	S1620-62311-14	78286	49	102
S1620-61930-5	78286	41		S1620-62311-15	78286	49	105
S1620-61930-6	78286	41		S1620-62311-16	78286	49	108
S1620-61932-1	78286	46		S1620-62311-17	78286	49	
S1620-61932-2	78286	46		S1620-62311-18	78286	49	
S1620-61937	78286	50		S1620-62311-19	78286	49	117
S1620-61942-16	78286	50		S1620-62311-2	78286	49	
S1620-61942-5	78286	50	144	S1620-62311-20	78286	49	120
S1620-61942-6	78286	50	145	S1620-62311-21	78286	49	96
S1620-61944	78286	50	269	S1620-62311-3	78286	49	
S1620-61944	78286	50	272	S1620-62311-4	78286	49	
S1620-61949	78286	50	311	S1620-62311-5	78286	49	
S1620-61952	78286	41		S1620-62311-7	78286	49	111
S1620-61952-2	78286	41	133	S1620-62311-8	78286	49	114
S1620-61952-5	78286	41	138	S1620-62311-9	78286	49	
S1620-61952-6	78286	41	129	S1620-62312	78286	49	101
S1620-61955	78286	50	343	S1620-62312	78286	49	104
S1620-61957	78286	41	134	S1620-62312	78286	49	107
S1620-61958	78286	50	220	S1620-62312	78286	49	110
S1620-61960	78286	50	218	S1620-62312	78286	49	113
S1620-61989-6	78286	53		S1620-62312	78286	49	116
S1620-61990-10	78286	53		S1620-62312	78286	49	119
S1620-61990-12	78286	53	5	S1620-62312	78286	49	122
S1620-61990-13	78286	53		S1620-62312	78286	49	95
S1620-61990-14	78286	53	9	S1620-62312	78286	49	98
S1620-61990-15	78286	53	13	S1620-62323	78286	49	
S1620-61990-21	78286	53	1	S1620-62323-496	78286	49	
S1620-61990-22	78286	50		S1620-62323-497	78286	49	
S1620-61990-22	78286	53		S1620-62323-498	78286	49	
S1620-61990-33	78286	53		S1620-62323-499	78286	49	
S1620-61990-5	78286	53	7	S1620-62324	78286	49	
S1620-61990-7	78286	53		S1620-62325	78286	41	
S1620-61990-8	78286	53	8	S1620-62325	78286	49	
S1620-61993-1	78286	44		S1620-62325-1	78286	49	
S1620-62005	78286	49		S1620-62328	78286	49	
S1620-62005-2	78286	49		S1620-62328-1	78286	49	67
S1620-62005-3	78286	49		S1620-62328-10	78286	49	
S1620-62005-4	78286	49		S1620-62329	78286	49	

REFERENCE NUMBER	MFG CODE	FIG NUMBER	ITEM NUMBER	REFERENCE NUMBER	MFG CODE	FIG NUMBER	ITEM NUMBER
S1620-62329-1	78286	49	69	S1620-63062-2	78286	41	191
S1620-62329-2	78286	49		S1620-63062-4	78286	41	192
S1620-62329-6	78286	49	70	S1620-63070	78286	50	
S1620-62331	78286	49	87	S1620-63100	78286	150	
S1620-62331-10	78286	49	88	S1620-63100-13	78286	150	
S1620-62332	78286	49	90	S1620-63100-14	78286	150	
S1620-62500	78286	11	47	S1620-63100-22	78286	150	24
S1620-62500	78286	36		S1620-63100-27	78286	150	
S1620-62508-1	78286	36	1	S1620-63100-29	78286	150	
S1620-62508-2	78286	36		S1620-63100-31	78286	150	
S1620-62508-3	78286	36		S1620-63100-36	78286	150	
S1620-62508-4	78286	36		S1620-63100-37	78286	150	
S1620-62510	78286	41		S1620-63100-79	78286	150	11
S1620-62511	78286	36		S1620-63101	78286	150	
S1620-62513	78286	36	16	S1620-63102	78286	150	
S1620-62548	78286	36	20	S1620-63102-1	78286	150	
S1620-62560	78286	36	15	S1620-63102-3	78286	150	
S1620-62561-1	78286	36	10	S1620-63103	78286	150	
S1620-62561-2	78286	36	9	S1620-63103-1	78286	150	
S1620-62575-1	78286	36	21	S1620-63104	78286	150	
S1620-62575-2	78286	36		S1620-63104-1	78286	150	
S1620-62576-1	78286	36	22	S1620-63105	78286	150	
S1620-62576-2	78286	36		S1620-63105-1	78286	150	
S1620-62585-1	78286	50	154	S1620-63106	78286	150	
S1620-62585-2	78286	50	156	S1620-63106-1	78286	150	
S1620-63000-3	78286	39	29	S1620-63107	78286	150	
S1620-63000-3	78286	150		S1620-63107-1	78286	150	
S1620-63004-10	78286	50	235	S1620-63109	78286	150	94
S1620-63004-11	78286	50	236	S1620-63121	78286	150	
S1620-63004-16	78286	50	306	S1620-63124	78286	150	71
S1620-63004-21	78286	50		S1620-63129-1	78286	150	
S1620-63004-25	78286	50		S1620-63129-2	78286	154	
S1620-63004-31	78286	50	228	S1620-63129-7	78286	154	125
S1620-63004-33	78286	50	231	S1620-63129-7	78286	154	130
S1620-63004-4	78286	50		S1620-63129-8	78286	150	101
S1620-63004-45	78286	50	251	S1620-63129-8	78286	150	97
S1620-63004-50	78286	50		S1620-63130-12	78286	150	95
S1620-63004-57	78286	50	237	S1620-63130-13	78286	150	98
S1620-63004-58	78286	50		S1620-63130-2	78286	150	
S1620-63004-67	78286	50		S1620-63130-3	78286	150	
S1620-63004-9	78286	50	230	S1620-63131	78286	150	102
S1620-63014-3	78286	50		S1620-63132-2	78286	39	
S1620-63014-5	78286	50		S1620-63133-1	78286	39	25
S1620-63015-20	78286	41		S1620-63133-2	78286	39	26
S1620-63015-25	78286	41	70	S1620-63134-2	78286	39	
S1620-63015-26	78286	41	71	S1620-63134-3	78286	39	
S1620-63015-27	78286	41		S1620-63134-4	78286	39	
S1620-63015-28	78286	41		S1620-63134-5	78286	39	22
S1620-63015-5	78286	41	72	S1620-63134-6	78286	39	24
S1620-63015-6	78286	41		S1620-63135-1	78286	39	23
S1620-63015-9	78286	41	77	S1620-63136	78286	39	21
S1620-63033-1	78286	50		S1620-63137	78286	39	27
S1620-63033-2	78286	50		S1620-63141	78286	39	
S1620-63033-3	78286	50		S1620-63142-6	78286	39	12
S1620-63035-12	78286	132	149A	S1620-63143	78286	39	15
S1620-63035-14	78286	132	152	S1620-63145	78286	39	9
S1620-63035-2	78286	132	148	S1620-63154	78286	150	73
S1620-63036	78286	41		S1620-63156	78286	150	
S1620-63037-1	78286	41		S1620-63156-1	78286	150	111
S1620-63038-13	78286	50		S1620-63156-2	78286	150	108
S1620-63038-37	78286	50		S1620-63157-10	78286	150	
S1620-63039-27	78286	50		S1620-63157-11	78286	150	43
S1620-63039-27	78286	50	27	S1620-63157-12	78286	150	
S1620-63040-1	78286	50		S1620-63157-13	78286	150	49
S1620-63040-7	78286	50		S1620-63157-9	78286	150	46
S1620-63052	78286	150		S1620-63158-1	78286	150	85
S1620-63052-1	78286	150	20	S1620-63161	78286	50	208
S1620-63052-2	78286	150	23	S1620-63161	78286	150	
S1620-63054	78286	141	33	S1620-63161-1	78286	150	79
S1620-63054-1	78286	141	38	S1620-63167	78286	150	118
S1620-63062-1	78286	41		S1620-63167-1	78286	150	120

REFERENCE NUMBER	MFG CODE	FIG NUMBER	ITEM NUMBER	REFERENCE NUMBER	MFG CODE	FIG NUMBER	ITEM NUMBER
S1620-63167-2	78286	150	125	S1620-64091-6	78286	154	178
S1620-63167-3	78286	150	124	S1620-64092	78286	154	
S1620-63168-1	78286	150		S1620-64092-1	78286	154	
S1620-63170-1	78286	150	77	S1620-64099-1	78286	154	
S1620-63171-10	78286	150		S1620-64099-2	78286	154	23
S1620-63171-9	78286	150		S1620-64099-5	78286	154	
S1620-63174	78286	150	1	S1620-64099-7	78286	154	29
S1620-63179	78286	150		S1620-64100	78286	154	
S1620-63190-1	78286	150		S1620-64100-1	78286	154	
S1620-63190-2	78286	150		S1620-64100-11	78286	154	
S1620-63190-3	78286	150	25	S1620-64100-14	78286	154	
S1620-63192	78286	150		S1620-64100-15	78286	154	
S1620-63193	78286	150	113	S1620-64100-19	78286	154	13
S1620-63194	78286	150	117	S1620-64100-2	78286	154	
S1620-63195	78286	150	115	S1620-64101-3	78286	154	
S1620-63199	78286	150		S1620-64102-15	78286	154	120
S1620-63200-1	78286	150	81	S1620-64102-18	78286	154	111
S1620-63200-2	78286	150	83	S1620-64102-27	78286	154	
S1620-63211	78286	150		S1620-64102-3	78286	154	118
S1620-63215-1	78286	150	53	S1620-64102-35	78286	154	
S1620-63215-2	78286	150	55	S1620-64102-4	78286	154	
S1620-63215-3	78286	150	57	S1620-64102-40	78286	154	103
S1620-63215-6	78286	150		S1620-64102-8	78286	154	
S1620-63216-1	78286	150	59	S1620-64107	78286	154	
S1620-63219	78286	150		S1620-64107-6	78286	154	165
S1620-63219-1	78286	150	34	S1620-64107-7	78286	154	166
S1620-63219-2	78286	150	31	S1620-64110	78286	154	
S1620-63219-3	78286	150	33	S1620-64116	78286	154	
S1620-63220	78286	49		S1620-64117	78286	154	237
S1620-63220-1	78286	49	83A	S1620-64117	78286	160	
S1620-63227	78287	150		S1620-64117-1	78286	160	7
S1620-63229-2	78286	39	19	S1620-64117-11	78286	154	61
S1620-63231	78286	39	20	S1620-64117-7	78286	160	11
S1620-63243	78286	150	29	S1620-64117-9	78286	154	
S1620-63244	78286	150	14	S1620-64119	78286	154	62
S1620-63245	78286	150	37	S1620-64120	78286	160	9
S1620-63252-1	78286	41		S1620-64122-1	78286	154	
S1620-63253-1	78286	41		S1620-64122-12	78286	154	49
S1620-63256-1	78286	50	224	S1620-64122-13	78286	154	51
S1620-63256-2	78286	50	227	S1620-64122-2	78286	154	45
S1620-63260	78286	50		S1620-64124-8	78286	154	
S1620-63262	78286	150		S1620-64124-9	78286	154	
S1620-63262-1	78286	150		S1620-64125-1	78286	154	
S1620-63262-2	78286	150		S1620-64125-2	78286	154	
S1620-63299-9	78286	50		S1620-64125-3	78286	154	14
S1620-64000-6	78286	39	1	S1620-64125-9	78286	154	
S1620-64000-6	78286	154		S1620-64127	78286	154	
S1620-64082-1	78286	42		S1620-64127-4	78286	154	121
S1620-64082-2	78286	42		S1620-64128	78286	154	
S1620-64087-1	78286	42		S1620-64128-3	78286	154	131
S1620-64087-10	78286	42		S1620-64129	78286	154	137
S1620-64087-11	78286	42		S1620-64131	78286	154	
S1620-64087-12	78286	42		S1620-64131-4	78286	154	126
S1620-64087-2	78286	42		S1620-64132-3	78286	154	
S1620-64087-20	78286	42	1	S1620-64132-56	78286	154	
S1620-64087-3	78286	42		S1620-64132-60	78286	154	
S1620-64088-1	78286	42		S1620-64132-65	78286	154	65
S1620-64088-10	78286	42		S1620-64132-66	78286	154	
S1620-64088-15	78286	42		S1620-64132-8	78286	154	
S1620-64088-2	78286	42		S1620-64132-9	78286	154	
S1620-64088-3	78286	42		S1620-64142	78286	154	
S1620-64089-1	78286	42	3	S1620-64142-10	78286	154	86
S1620-64089-2	78286	42		S1620-64142-6	78286	154	82
S1620-64089-21	78286	42		S1620-64142-7	78286	154	83
S1620-64089-22	78286	42		S1620-64142-8	78286	154	84
S1620-64089-3	78286	42		S1620-64142-9	78286	154	85
S1620-64089-4	78286	42		S1620-64145-5	78286	154	199
S1620-64091	78286	154		S1620-64146-1	78286	154	
S1620-64091-3	78286	154		S1620-64146-2	78286	154	
S1620-64091-4	78286	154		S1620-64146-3	78286	154	87
S1620-64091-5	78286	154		S1620-64146-4	78286	154	90

REFERENCE NUMBER	MFG CODE	FIG NUMBER	ITEM NUMBER	REFERENCE NUMBER	MFG CODE	FIG NUMBER	ITEM NUMBER
S1620-64146-5	78286	154	88	S1620-65095-1	78286	43	82
S1620-64146-6	78286	154	91	S1620-65095-2	78286	43	
S1620-64147-2	78286	160	18	S1620-65095-6	78286	43	84
S1620-64147-2	78286	160	22	S1620-65097-7	78286	46	111
S1620-64147-3	78286	160	39	S1620-65098	78286	46	
S1620-64147-4	78286	160		S1620-65100-2	78286	44	53
S1620-64150-4	78286	154		S1620-65100-2	78286	46	
S1620-64150-5	78286	154		S1620-65104-14	78286	43	96
S1620-64151-1	78286	154	58	S1620-65104-15	78286	43	
S1620-64151-2	78286	154		S1620-65104-18	78286	43	
S1620-64152	78286	160	12	S1620-65105-3	78286	46	
S1620-64153-1	78286	154		S1620-65105-4	78286	46	
S1620-64154	78286	160	1	S1620-65106-10	78286	43	72
S1620-64154-4	78286	160	6	S1620-65106-13	78286	43	97
S1620-64154-5	78286	160	4	S1620-65106-14	78286	43	98
S1620-64155-1	78286	154	205	S1620-65107	78286	41	
S1620-64155-10	78286	154	223	S1620-65108	78286	46	
S1620-64155-11	78286	154	225	S1620-65110-5	78286	43	93
S1620-64155-12	78286	154	227	S1620-65110-7	78286	43	
S1620-64155-13	78286	154	229	S1620-65110-8	78286	43	
S1620-64155-2	78286	154	207	S1620-65112-11	78286	43	
S1620-64155-3	78286	154	209	S1620-65112-12	78286	43	
S1620-64155-4	78286	154	211	S1620-65112-13	78286	43	29
S1620-64155-5	78286	154	213	S1620-65112-14	78286	43	
S1620-64155-6	78286	154	215	S1620-65112-15	78286	43	52
S1620-64155-7	78286	154	217	S1620-65112-17	78286	43	49
S1620-64155-8	78286	154	219	S1620-65112-9	78286	43	54
S1620-64155-9	78286	154	221	S1620-65113-1	78286	43	73
S1620-64158	78286	160	16	S1620-65113-11	78286	43	75
S1620-64159	78286	160	20	S1620-65113-13	78286	43	74
S1620-64160	78286	154		S1620-65113-3	78286	43	76
S1620-64160-1	78286	154	17	S1620-65113-9	78286	43	61
S1620-64160-4	78286	154	21	S1620-65114-1	78286	43	94
S1620-64160-5	78286	154		S1620-65114-2	78286	43	
S1620-64161-1	78286	160	37	S1620-65114-3	78286	43	
S1620-64161-2	78286	160		S1620-65114-4	78286	43	
S1620-64162-1	78286	160	27	S1620-65114-5	78286	43	69
S1620-64162-2	78286	160	24	S1620-65115-1	78286	43	77
S1620-64163-1	78286	160	42	S1620-65115-3	78286	43	79
S1620-64163-1	78286	160	46	S1620-65115-5	78286	43	80
S1620-64163-2	78286	160	40	S1620-65118-9	78286	46	
S1620-64163-2	78286	160	44	S1620-65123	78286	46	62
S1620-64163-2	78286	160	48	S1620-65125-11	78286	45	32
S1620-64165-1	78286	160	52	S1620-65125-13	78286	45	23
S1620-64165-2	78286	160	50	S1620-65125-21	78286	45	22
S1620-64165-2	78286	160	54	S1620-65125-75	78286	44	40
S1620-64169-1	78286	154		S1620-65125-75	78286	45	
S1620-64169-2	78286	154		S1620-65126-41	78286	45	41
S1620-64169-3	78286	154	115	S1620-65126-42	78286	45	37
S1620-64172	78286	154		S1620-65126-69	78286	44	
S1620-64172-1	78286	154	235	S1620-65126-69	78286	45	
S1620-64174-1	78286	154	94	S1620-65128-1	78286	44	19C
S1620-64174-2	78286	154		S1620-65132-1	78286	45	
S1620-64175-1	78286	39	2	S1620-65132-11	78286	45	12
S1620-64175-2	78286	39	5	S1620-65132-12	78286	45	11
S1620-64200-1	78280	154		S1620-65132-14	78286	45	15A
S1620-64201-1	78286	154	64	S1620-65132-19	78286	45	
S1620-64201-5	78286	154		S1620-65132-2	78286	45	
S1620-64202-1	78286	50	47	S1620-65132-24	78286	45	
S1620-64202-2	78286	50		S1620-65132-3	78286	45	16
S1620-65000-2	78286	41	111	S1620-65132-4	78286	45	
S1620-65000-2	78286	44		S1620-65132-5	78286	45	14
S1620-65093	78286	43	86	S1620-65132-6	78286	45	
S1620-65094-1	78286	46		S1620-65132-8	78286	45	19
S1620-65094-2	78286	46		S1620-65134-27	78286	45	3
S1620-65094-20	78286	46		S1620-65134-27	78286	45	6
S1620-65094-27	78286	46		S1620-65134-28	78286	45	25
S1620-65094-28	78286	46	78	S1620-65134-30	78286	45	
S1620-65094-3	78286	46	81	S1620-65137	78286	46	
S1620-65094-30	78286	46	83	S1620-65138	78286	46	16
S1620-65094-4	78286	46		S1620-65139-1	78286	46	50

REFERENCE NUMBER	MFG CODE	FIG NUMBER	ITEM NUMBER	REFERENCE NUMBER	MFG CODE	FIG NUMBER	ITEM NUMBER
S1620-65139-11	78286	46	51	S1620-65159-4	78286	150	27
S1620-65139-2	78286	46		S1620-65159-5	78286	41	169
S1620-65139-5	78286	46	49	S1620-65159-5	78286	41	173
S1620-65139-6	78286	46		S1620-65159-5	78286	41	178
S1620-65139-9	78286	46	52	S1620-65159-5	78296	41	183
S1620-65140-1	78286	46	41	S1620-65159-5	78286	48	16
S1620-65140-2	78286	46		S1620-65165-1	78286	46	9
S1620-65141-69	78286	46	120	S1620-65165-2	78286	46	
S1620-65142-1	78286	46	42	S1620-65168-1	78286	44	42
S1620-65142-3	78286	44		S1620-65171-1	78286	45	34
S1620-65142-3	78286	46		S1620-65171-2	78286	45	35
S1620-65143-10	78286	44		S1620-65174-1	78286	46	8
S1620-65143-9	78286	44		S1620-65174-2	78286	46	6
S1620-65144	78286	44		S1620-65174-3	78286	46	5
S1620-65144-11	78286	44		S1620-65174-4	78286	46	7
S1620-65144-15	78286	44	32	S1620-65175-1	78286	41	
S1620-65144-7	78286	44		S1620-65175-2	78286	41	
S1620-65144-8	78286	44		S1620-65176-1	78286	41	
S1620-65145	78286	44		S1620-65176-2	78286	41	
S1620-65145-31	78286	44	20	S1620-65176-3	78286	41	
S1620-65145-32	78286	44	22	S1620-65176-4	78286	41	
S1620-65145-33	78286	44	24	S1620-65176-5	78286	41	
S1620-65145-38	78286	44		S1620-65176-6	78286	41	
S1620-65145-39	78286	44		S1620-65179	78286	45	8
S1620-65145-40	78286	44		S1620-65180-1	78286	43	71
S1620-65145-82	78296	44	28	S1620-65186-10	78286	45	
S1620-65145-84	78286	44	30	S1620-65186-11	78286	45	
S1620-65145-86	78286	44	26	S1620-65186-12	78286	45	
S1620-65146-1	78286	46	102	S1620-65186-13	78286	45	50
S1620-65148-3	78286	46	19	S1620-65186-14	78286	45	55
S1620-65148-4	78286	46		S1620-65186-15	78286	45	61
S1620-65148-7	78286	46	11	S1620-65186-3	78286	45	
S1620-65149-1	78286	44	36	S1620-65186-7	78286	45	
S1620-65149-3	78286	50	25	S1620-65186-75	78286	44	
S1620-65149-4	78286	50		S1620-65186-75	78286	45	
S1620-65149-9	78286	44	38	S1620-65186-8	78286	45	
S1620-65150-1	78286	46		S1620-65186-9	78286	45	
S1620-65150-2	78286	46		S1620-65187-26	78286	45	45
S1620-65150-3	78286	46	22	S1620-65187-34	78286	45	59
S1620-65150-4	78286	46		S1620-65188	78286	46	23
S1620-65151-1	78286	46		S1620-65188	78286	46	35
S1620-65151-2	78286	46		S1620-65188	78286	46	40
S1620-65151-3	78286	46	44	S1620-65188	78286	46	45
S1620-65151-4	78286	46	46	S1620-65188	78286	46	47
S1620-65152-1	78286	44	1	S1620-65188	78286	46	56
S1620-65152-2	78286	44		S1620-65189-1	78286	45	
S1620-65153-1	78286	46	48	S1620-65191-11	78286	46	
S1620-65153-2	78286	46		S1620-65194	78286	43	89
S1620-65155-17	78286	46	59	S1620-65199	78286	45	7
S1620-65155-18	78286	46	60	S1620-65201-11	78286	43	24
S1620-65155-19	78286	46	61	S1620-65201-12	78286	43	28
S1620-65155-2	78286	46		S1620-65201-13	78286	43	26
S1620-65155-7	78286	46	13	S1620-65201-14	78286	43	27
S1620-65155-8	78286	46		S1620-65201-3	78286	43	
S1620-65156-1	78286	46		S1620-65201-4	78286	43	
S1620-65156-10	78286	46	34	S1620-65201-5	78286	43	14
S1620-65156-11	78286	46		S1620-65204-1	78286	43	
S1620-65156-2	78286	46		S1620-65204-10	78286	43	7
S1620-65156-3	78286	46		S1620-65204-11	78286	43	4
S1620-65156-4	78286	46		S1620-65204-2	78286	43	
S1620-65156-5	78286	46		S1620-65204-3	78286	43	1
S1620-65156-7	78286	46	55	S1620-65204-4	78286	43	
S1620-65156-8	78286	46		S1620-65204-5	78286	43	9
S1620-65156-9	78286	46	39	S1620-65204-6	78286	43	5
S1620-65157	78286	44		S1620-65204-8	78286	43	12
S1620-65157-1	78286	44	19A	S1620-65205	78286	43	13
S1620-65157-7	78286	44	15	S1620-65210-1	78286	43	22
S1620-65158-1	78286	45	1	S1620-65210-2	78286	43	
S1620-65158-2	78286	45		S1620-65211-1	78286	46	
620-65159-3	78286	41	8	S1620-65211-2	78286	46	
0-65159-3	78286	46	1	S1620-65211-3	78286	46	87

REFERENCE NUMBER	MFG CODE	FIG NUMBER	ITEM NUMBER	REFERENCE NUMBER	MFG CODE	FIG NUMBER	ITEM NUMBER
S1620-65211-4	78286	46		S1625-50101	78286	163	
S1620-65211-7	78286	46	100	S1625-50102	78286	163	7
S1620-65211-8	78286	46		S1625-50102	78286	164	
S1620-65211-9	78286	46	88	S1625-50103	78286	163	9
S1620-65212-2	78286	41		S1625-50104	78286	163	13
S1620-65212-3	78286	41	113	S1625-50105	78286	163	10
S1620-65212-5	78286	41		S1625-50107	78286	163	2
S1620-65212-6	78286	41		S1625-50109	78286	162	57
S1620-65219-1	78286	43	47	S1625-50109	78286	163	4
S1620-65220-7	78286	43	92	S1625-50110-13	78286	162	
S1620-65221-1	78286	43		S1625-50110-14	78286	162	
S1620-65221-21	78286	43	35	S1625-50110-3	78286	162	
S1620-65221-23	78286	43		S1625-50110-4	78286	162	
S1620-65221-23	78286	43	41	S1625-50111-1	78286	162	
S1620-65223-10	78286	41		S1625-50111-2	78286	162	
S1620-65223-10	78286	43		S1625-50111-5	78286	162	
S1620-65223-13	78286	43	62	S1625-50111-6	78286	162	
S1620-65223-3	78286	41		S1625-50119-1	78286	162	55
S1620-65223-4	78286	41		S1625-50119-2	78286	162	
S1620-65223-53	78286	41	112	S1625-50119-4	78286	162	
S1620-65223-53	78286	43		S1625-50121	78286	162	
S1620-65223-54	78286	41		S1625-50121-1	78286	162	58
S1620-65223-54	78286	43		S1625-50122	78286	162	48
S1620-65223-9	78286	43		S1625-50124	78286	163	6
S1620-65227-2	78286	45	63	S1625-50125	78286	162	32
S1620-66115-3	78286	50		S1625-50126	78286	162	35
S1620-66120-14	78286	50		S1625-50128	78286	162	64
S1620-66120-21	78286	50		S1625-50129	78286	162	62
S1620-66120-22	78286	50		S1625-50130	78286	163	11
S1620-66120-24	78286	50		S1625-50131	78286	162	51
S1620-66120-25	78286	50		S1625-50131-1	78286	162	54
S1620-66120-27	78286	50		S1625-50131-2	78286	162	53
S1620-66120-73	78286	50		S1625-50133	78286	162	6
S1620-66120-75	78286	50		S1625-50133-2	78286	162	3
S1620-66313-2	78286	50	346	S1625-50133-2	78286	162	
S1620-66314-2	78286	50	348	S1625-50134	78286	162	59
S1620-66318-13	78286	41	94	S1625-50135	78286	164	15
S1620-66320-10	78286	41	99	S1625-50136	78286	164	14
S1620-66328	78286	145	54	S1625-50141	78286	164	5
S1620-66328-1	78286	145	55	S1625-50142-1	78286	164	6
S1620-66337	78286	50	351	S1625-50143	78286	164	7
S1620-66370	78286	50		S1625-50144	78286	164	10
S1620-66370-5	78286	50	89	S1625-50148	78286	164	4
S1620-66370-7	78286	50		S1625-50149	78286	164	3
S1620-66489-1	78286	43		S1625-50150-2	78286	164	1
S1620-66489-2	78286	43		S1625-50150-7	78286	163	1
S1620-66489-3	78286	43	20	S1625-50153	78286	162	20
S1620-66489-4	78286	43		S1625-50154-1	78286	162	17
S1620-66492	78286	50		S1625-50154-2	78286	162	18
S1620-66493-1	78286	50	397	S1625-50154-4	78286	165	
S1620-66493-2	78286	50	395	S1625-50156	78286	50	393
S1620-66499-11	78286	41		S1625-50156	78286	150	106
S1620-66499-12	78286	41		S1625-50157	78286	163	5
S1620-66499-15	78286	41		S1625-50160-1	78286	162	
S1620-66499-16	78286	41		S1625-50160-2	78286	162	
S1620-66499-7	78286	41		S1625-50160-5	78286	162	63
S1620-66500-4	78286	154		S1625-50160-6	78286	162	
S1620-66792-24	78286	49	54	S1625-50166	78286	162	34
S1620-66792-25	78286	49	53	S1625-50167	78286	162	33
S1620-66870-3	78286	50		S1625-50168-1	78286	162	66
S1620-66870-4	78286	50		S1625-50168-2	78286	162	69
S162061802-18	78286	43	74E	S1625-50168-3	78286	162	70
S1625-20059-192	78286	32	119	S1625-50168-4	78286	162	73
S1625-50000-3	78286	161		S1625-50500-5	78286	161	3
S1625-50100-3	78286	162	9	S1625-50500-5	78286	165	
S1625-50100-4	78286	162		S1625-50501-6	78286	165	11
S1625-50100-7	78286	161	1	S1625-50502	78286	165	16
S1625-50100-7	78286	162		S1625-50503-20	78286	165	
S1625-50100-8	78286	161	2	S1625-50503-23	78286	165	
S1625-50100-8	78286	162		S1625-50504	78286	165	
S1625-50101	78286	162	29	S1625-50504-1	78286	165	66

REFERENCE NUMBER	MFG CODE	FIG NUMBER	ITEM NUMBER	REFERENCE NUMBER	MFG CODE	FIG NUMBER	ITEM NUMBER
S1625-50505-3	78286	165	35	S1625-61050-29	78286	54	11
S1625-50506	78286	165	40	S1625-61050-31	78286	54	16
S1625-50508	78286	165		S1625-61050-32	78286	54	19
S1625-50508-2	78286	165	72	S1625-61050-33	78286	54	
S1625-50508-3	78286	165		S1625-61050-6	78286	54	36
S1625-50510	78286	165		S1625-61053-2	78286	54	
S1625-50510-1	78286	165	25	S1625-61053-3	78286	54	
S1625-50510-1	78286	166		S1625-61053-4	78286	54	41
S1625-50511	78286	165	68	S1625-61053-7	78286	54	39
S1625-50512	78286	165	71	S1625-61800	78286	86	4
S1625-50515	78286	165	34	S1625-61800	78286	108	
S1625-50516	78286	165	32	S1625-61801	78286	108	
S1625-50516-3	78286	165		S1625-61802	78286	108	44
S1625-50517	78286	163	12	S1625-61803	78286	104	37
S1625-50518	78286	165	52	S1625-61805	78286	108	46
S1625-50519	78286	165	44	S1625-61806	78286	108	45
S1625-50520	78286	165	67	S1625-61806	78286	108	48
S1625-50523	78286	165	59	S1625-61807	78286	108	38
S1625-50524	78286	165	63	S1625-61809-2	78286	152	
S1625-50525	78286	165	13	S1625-61811	78286	108	47
S1625-50525	78286	165	18	S1625-61811	78286	108	51
S1625-50525	78286	165	21	S1625-63800-1	78286	152	
S1625-50525	78286	165	24	S1630-61000-2	78286	40	5
S1625-50526	78286	165	19	S1630-61000-2	78286	55	
S1625-50526	78286	165	22	S1630-61007	78286	55	
S1625-50528	78286	165	15	S1630-61007-2	78286	55	
S1625-50530	78286	166	14	S1630-61007-3	78286	56	
S1625-50532		KITS		S1630-61007-4	78286	55	71
S1625-50539-1	78286	166	5	S1630-61007-4	78286	56	86
S1625-50540	78286	166	10	S1630-61007-5	78286	56	89
S1625-50541	78286	166	7	S1630-61007-5	78286	90	11
S1625-50542	78286	166	6	S1630-61008	78286	55	
S1625-50542		KITS		S1630-61008	78286	56	
S1625-50542-1		KITS		S1630-61009	78286	55	41
S1625-50543	78286	166	4	S1630-61009-3	78286	56	
S1625-50544	78286	166	3	S1630-61009-7	78286	56	93
S1625-50545-4	78286	166	2	S1630-61011	78286	55	
S1625-50545-6	78286	166	1	S1630-61011	78286	62	
S1625-50547	78286	165	1	S1630-61011	78286	71	
S1625-50548	78286	165	60	S1630-61016	78286	55	59
S1625-50549	78286	152	14	S1630-61019-1	78286	55	63
S1625-50550	78286	152	9	S1630-61022	78286	55	39
S1625-50551-2	78286	165	37	S1630-61022	78286	70	
S1625-50552-2	78286	165	39	S1630-61022-1	78286	70	1
S1625-50553	78286	165	38	S1630-61022-2	78286	70	30
S1625-50555	78286	165	57	S1630-61023	78286	70	23
S1625-50556	78286	165	62	S1630-61027	78286	58	1
S1625-50557	78286	152	8	S1630-61036-1	78286	58	24
S1625-50557	78286	165	61	S1630-61038-1	78286	58	3
S1625-61000-3	78286	40	8	S1630-61042	78286	58	4
S1625-61000-3	78286	54		S1630-61044-1	78286	78	35
S1625-61010	78286	54	58	S1630-61045-2	78286	78	31
S1625-61011	78286	54	61	S1630-61049	78286	58	28
S1625-61012-1	78286	54	73	S1630-61049	78286	78	34
S1625-61012-2	78286	54	69	S1630-61052	78286	58	
S1625-61013	78286	54	70	S1630-61055	78286	57	
S1625-61015-1	78286	54	64	S1630-61056-1	78286	57	31
S1625-61016-1	78286	54		S1630-61057-2	78286	57	33
S1625-61016-3	78286	54	66	S1630-61062-1	78286	57	
S1625-61017	78286	54	55	S1630-61062-17	78286	55	13
S1625-61020-1	78286	54	60	S1630-61062-17	78286	55	14
S1625-61020-2	78286	54		S1630-61062-2	78286	57	
S1625-61050-11	78286	54	14	S1630-61062-5	78286	55	20
S1625-61050-17	78286	54	7	S1630-61062-6	78286	55	26
S1625-61050-18	78286	54	32	S1630-61069	78286	57	13
S1625-61050-21	78286	54	10	S1630-61073	78286	58	7
S1625-61050-22	78286	54	35	S1630-61078	78286	55	2
S1625-61050-23	78286	54	2	S1630-61078	78286	59	
S1625-61050-24	78286	54	27	S1630-61078-1	78286	59	1
S1625-61050-25	78286	54	5	S1630-61078-2	78286	59	12
S1625-61050-26	78286	54	30	S1630-61078-3	78286	59	14

REFERENCE NUMBER	MFG CODE	FIG NUMBER	ITEM NUMBER	REFERENCE NUMBER	MFG CODE	FIG NUMBER	ITEM NUMBER
S1630-61078-3	78286	60	4	S1630-61129-3	78286	55	
S1630-61078-5	78286	59	13	S1630-61130	78286	55	50
S1630-61078-6	78286	59	11	S1630-61130-1	78286	55	51
S1630-61079	78286	55		S1630-61130-2	78286	55	54
S1630-61079-2	78286	55	5	S1630-61131-1	78286	55	79
S1630-61080	78286	55	9	S1630-61134	78286	55	
S1630-61080	78286	61		S1630-61136	78286	78	
S1630-61080-1	78286	61	1	S1630-61137	78286	58	22
S1630-61080-10	78286	61	8	S1630-61137	78286	78	37
S1630-61080-2	78286	61	10	S1630-61138-1	78286	78	39
S1630-61080-3	78286	61	17	S1630-61138-2	78286	78	
S1630-61080-4	78286	61	23	S1630-61139	78286	78	32
S1630-61080-5	78286	61	6	S1630-61141	78286	58	20
S1630-61080-6	78286	61	7	S1630-61142	78286	58	26
S1630-61080-7	78286	61	22	S1630-61143	78286	58	5
S1630-61080-8	78286	61	28	S1630-61144	78286	58	15
S1630-61080-9	78286	61	20	S1630-61146	78286	58	27
S1630-61080-9	78286	61	26	S1630-61147-1	78286	78	
S1630-61081-12	78286	62	6	S1630-61147-2	78286	78	
S1630-61081-13	78286	62	11	S1630-61148-1	78286	58	21
S1630-61081-18	78286	62		S1630-61152-1	78286	58	
S1630-61081-19	78286	55	12	S1630-61152-2	78286	58	17
S1630-61081-19	78286	62		S1630-61152-4	78286	57	15
S1630-61081-2	78286	62	14	S1630-61152-4	78286	58	
S1630-61081-4	78286	62	15	S1630-61153-3	78286	55	
S1630-61081-5	78286	62	2	S1630-61153-6	78286	55	58
S1630-61081-6	78286	62	7	S1630-61154	78286	55	47
S1630-61081-7	78286	62	24	S1630-61154-1	78286	55	55
S1630-61084	78286	55	19	S1630-61155	78286	68	5
S1630-61084	78286	64		S1630-61156-1	78286	55	34
S1630-61084-6	78286	64		S1630-61156-2	78286	55	28
S1630-61085-5	78286	64	3	S1630-61156-3	78286	55	37A
S1630-61086	78286	55	16	S1630-61157	78286	70	26
S1630-61086	78286	63		S1630-61158	78286	57	7
S1630-61086-6	78286	63	1	S1630-61158-1	78286	57	9
S1630-61086-7	78286	63	5	S1630-61158-2	78286	57	12
S1630-61088	78286	55	25	S1630-61158-3	78286	57	
S1630-61088	78286	69		S1630-61158-4	78286	57	5
S1630-61088-1	78286	69	1	S1630-61159	78286	57	
S1630-61088-10	78286	69	19	S1630-61160-1	78286	57	3
S1630-61089	78286	69	12	S1630-61160-2	78286	57	4
S1630-61089-2	78286	69	16	S1630-61161	78286	62	22
S1630-61090-3	78286	71	11	S1630-61194	78286	71	6
S1630-61090-3	78286	73	1	S1630-61195	78286	72	3
S1630-61091	78286	71	10	S1630-61196	78286	55	68
S1630-61092	78286	55	45	S1630-61197	78286	55	66
S1630-61092	78286	71		S1630-61197	78286	62	20
S1630-61092-1	78286	71	1	S1630-61197	78286	71	8
S1630-61092-3	78286	71	4	S1630-61198	78286	55	75
S1630-61098	78286	72		S1630-61198	78286	56	90
S1630-61100-2	78286	58	10	S1630-61600-1	78286	56	
S1630-61103	78286	70	19	S1630-61600-2	78286	56	
S1630-61104	78286	70	18	S1630-61600-5	78286	40	
S1630-61105-2	78286	70		S1630-61600-5	78286	56	
S1630-61106	78286	71		S1630-61602	78286	56	101
S1630-61107	78286	68	11	S1630-61602	78286	67	
S1630-61118-1	78286	55	6	S1630-61603	78286	67	15
S1630-61118-2	78286	55		S1630-61604	78286	67	22
S1630-61118-3	78286	55	8	S1630-61604-1	78286	67	
S1630-61120	78286	55	99	S1630-61605	78286	67	23
S1630-61120	78286	72		S1630-61605-1	78286	67	
S1630-61121	78286	72	17	S1630-61606	78286	67	3
S1630-61122-3	78286	72	14	S1630-61608	78286	67	9
S1630-61122-4	78286	72		S1630-61609-1	78286	67	1
S1630-61123	78286	72	16	S1630-61611	78286	56	72
S1630-61125	78286	72	7	S1630-61612	78286	65	12
S1630-61126	78286	55	90	S1630-61613	78286	65	1
S1630-61127	78286	55		S1630-61616	78286	65	3
S1630-61127-1	78286	55	88	S1630-61617	78286	56	77
S1630-61128	78286	55	95	S1630-61618	78286	56	100
S1630-61129-2	78286	55	93	S1630-61618	78286	73	

REFERENCE NUMBER	MFG CODE	FIG NUMBER	ITEM NUMBER	REFERENCE NUMBER	MFG CODE	FIG NUMBER	ITEM NUMBER
S1630-61618-1	78286	73	6	S1630-61646	78286	56	2
S1630-61618-2	78286	73	11	S1630-61646	78286	60	
S1630-61619	78286	73	9	S1630-61646-1	78286	60	1
S1630-61620	78286	73	7	S1630-61647	78286	56	54
S1630-61621	78286	56	108	S1630-61648	78286	56	84
S1630-61623-1	78286	66	14	S1630-61650	78286	55	102
S1630-61623-2	78286	66	17	S1630-61650	78286	56	109
S1630-61623-3	78286	56	85	S1630-61650	78286	57	
S1630-61623-4	78286	66	8	S1630-61651	78286	57	
S1630-61624-1	78286	66	13	S1630-61652	78286	57	17
S1630-61624-2	78286	66	7	S1630-61652-2	78286	57	20
S1630-61625	78286	56	80	S1630-61652-3	78286	57	21
S1630-61625	78286	66		S1630-61654	78286	57	
S1630-61627	78286	56	62	S1630-61655	78286	57	25
S1630-61628	78286	56	69	S1630-61656	78286	57	22
S1630-61629	78286	56	26	S1630-61657	78286	57	27
S1630-61630-1	78286	56	37	S1630-61658	78286	56	110
S1630-61630-2	78286	56	34	S1630-62006	78286	80	142
S1630-61630-3	78286	56	35	S1630-62015-2	78286	79	
S1630-61631-1	78286	169		S1630-62016-2	78286	81	115
S1630-61631-13	78286	56		S1630-62019-3	78286	79	191
S1630-61631-15	78286	56		S1630-62020-2	78286	77	32
S1630-61631-17	78286	56		S1630-62020-2	78286	78	
S1630-61631-19	78286	56		S1630-62021	78286	78	
S1630-61631-21	78286	56		S1630-62022	78286	78	
S1630-61631-23	78286	169		S1630-62024-1	78286	78	45
S1630-61631-25	78286	169		S1630-62024-2	78286	78	42
S1630-61631-27	78286	57		S1630-62025	78286	78	44
S1630-61631-29	78286	57		S1630-62026	78286	79	25
S1630-61631-3	78286	169		S1630-62026	78286	80	50
S1630-61631-31	78286	58		S1630-62026	78286	81	39
S1630-61631-33	78286	58		S1630-62027-3	78286	79	19
S1630-61631-5	78286	56		S1630-62027-3	78286	80	30
S1630-61631-63	78286	169	48	S1630-62027-3	78286	81	19
S1630-61631-65	78286	169	47	S1630-62028	78286	79	21
S1630-61631-67	78286	169		S1630-62028	78286	80	32
S1630-61631-69	78286	56	19	S1630-62028	78286	81	21
S1630-61631-7	78286	56		S1630-62029	78286	79	104
S1630-61631-71	78286	56	39	S1630-62029	78286	79	111
S1630-61631-73	78286	56	57	S1630-62029	78286	79	122
S1630-61631-75	78286	56	60	S1630-62029	78286	79	129
S1630-61631-77	78286	56	58	S1630-62030	78286	79	166
S1630-61631-79	78286	56	61	S1630-62030	78286	80	104
S1630-61631-81	78286	56	21	S1630-62030	78286	81	87
S1630-61631-83	78286	169	45	S1630-62033	78286	79	52
S1630-61631-85	78286	169	46	S1630-62033	78286	79	90
S1630-61631-9	78286	56		S1630-62033	78286	80	141
S1630-61632-1	78286	56	47	S1630-62034	78286	79	
S1630-61632-2	78286	56	49	S1630-62035	78286	79	
S1630-61633	78286	56	40	S1630-62036	78286	76	35
S1630-61634	78286	56	52	S1630-62036	78286	76	74
S1630-61637-1	78286	56	6	S1630-62036	78286	79	58
S1630-61637-2	78286	56	7	S1630-62036	78286	79	71
S1630-61638	78286	67	12	S1630-62036	78286	80	90
S1630-61639-1	78286	65	10	S1630-62036	78286	81	73
S1630-61640	78286	56	75	S1630-62037	78286	78	
S1630-61640	78286	65		S1630-62039	78286	79	
S1630-61640-3	78286	65		S1630-62039-2	78286	79	
S1630-61641-1	78286	67	20	S1630-62041	78286	79	
S1630-61641-2	78286	67	21	S1630-62042-1	78286	79	
S1630-61642	78286	56	46	S1630-62043	78286	80	
S1630-61643	78286	67	8	S1630-62043-1	78286	80	86
S1630-61644-1	78286	56		S1630-62043-1	78286	81	69
S1630-61644-10	78286	56	15	S1630-62044	78286	78	16
S1630-61644-4	78286	56		S1630-62044	78286	78	3
S1630-61644-5	78286	56	13	S1630-62045-1	78286	79	11
S1630-61644-6	78286	56	14	S1630-62045-1	78286	79	27
S1630-61644-7	78286	56	17	S1630-62045-1	78286	79	39
S1630-61644-8	78286	56	10	S1630-62045-1	78286	80	11
S1630-61644-9	78286	56	11	S1630-62045-1	78286	80	23
S1630-61645-1	78286	60	15	S1630-62045-1	78286	81	11

REFERENCE NUMBER	MFG CODE	FIG NUMBER	ITEM NUMBER	REFERENCE NUMBER	MFG CODE	FIG NUMBER	ITEM NUMBER
S1630-62045-4	78286	80	19	S1630-62056-151	78286	77	68
S1630-62045-4	78286	81		S1630-62056-155	78286	77	65
S1630-62046	78286	79	17	S1630-62056-157	78286	77	92
S1630-62046	78286	80	17	S1630-62056-159	78286	77	84
S1630-62046	78286	80	28	S1630-62056-161	78286	77	85
S1630-62046	78286	81	17	S1630-62056-163	78286	77	87
S1630-62046-2	78286	79	37	S1630-62056-185	78286	77	103
S1630-62046-2	78286	79	47	S1630-62056-187	78286	77	101
S1630-62047	78286	79	13	S1630-62056-69	78286	77	79
S1630-62047	78286	79	29	S1630-62056-71	78286	77	
S1630-62047	78286	79	41	S1630-62056-71	78286	77	74
S1630-62047	78286	80	13	S1630-62056-75	78286	77	73
S1630-62047	78286	80	24	S1630-62056-85	78286	77	91
S1630-62047	78286	81	13	S1630-62056-95	78286	77	98
S1630-62048-1	78286	79	22	S1630-62056-97	78286	77	96
S1630-62048-1	78286	80	43	S1630-62061-1	78286	79	10
S1630-62048-10	78286	80	41	S1630-62061-1	78286	80	10
S1630-62048-10	78286	81	30	S1630-62061-1	78286	81	10
S1630-62049	78286	78	28	S1630-62064-1	78286	79	173
S1630-62050	78286	80		S1630-62064-1	78286	79	175
S1630-62051	78286	79		S1630-62064-1	78286	80	114
S1630-62055-1	78286	81	49	S1630-62064-1	78286	80	117
S1630-62055-15	78286	79	49	S1630-62064-1	78286	81	97
S1630-62055-17	78286	79	86	S1630-62064-1	78286	81	99
S1630-62055-23	78286	77	42	S1630-62065	78286	77	36
S1630-62055-25	78286	77	44	S1630-62066	78286	77	111
S1630-62055-27	78286	77		S1630-62066	78286	77	116
S1630-62055-29	78286	77	39	S1630-62066	78286	77	122
S1630-62055-3	78286	81	42	S1630-62066	78286	77	127
S1630-62055-31	78286	77	31	S1630-62066	78286	77	72
S1630-62055-33	78286	77	30	S1630-62066	78286	77	78
S1630-62055-39	78286	77		S1630-62066	78286	77	83
S1630-62055-4	78286	81	45	S1630-62071	78286	79	
S1630-62055-43	78286	74	72	S1630-62072	78286	79	
S1630-62055-43	78286	75	88	S1630-62076-2	78286	79	8
S1630-62055-44	78286	74	75	S1630-62076-2	78286	80	8
S1630-62055-44	78286	75	91	S1630-62076-2	78286	81	8
S1630-62055-5	78286	80	60	S1630-62077	78286	80	
S1630-62055-59	78286	77	28	S1630-62078	78286	80	36
S1630-62055-61	78286	77	37	S1630-62078	78286	80	45
S1630-62055-63	78286	77		S1630-62078	78286	81	25
S1630-62055-65	78286	79	112	S1630-62078	78286	81	34
S1630-62055-65	78286	79	94	S1630-62080	78286	79	81
S1630-62055-66	78286	79	115	S1630-62081	78286	80	72
S1630-62055-66	78286	79	97	S1630-62081	78286	81	55
S1630-62055-7	78286	80	54	S1630-62081-1	78286	80	78
S1630-62055-71	78286	77	4	S1630-62087	78286	80	
S1630-62055-85	78286	79	72	S1630-62088-1	78286	79	
S1630-62055-86	78286	79	75	S1630-62088-11	78286	79	45
S1630-62055-89	78286	77	3	S1630-62088-14	78286	79	35
S1630-62055-9	78286	80	65	S1630-62088-3	78286	79	
S1630-62055-97	78286	79	59	S1630-62088-4	78286	79	
S1630-62055-97	78286	80	91	S1630-62088-8	78286	79	
S1630-62055-98	78286	81	77	S1630-62092	78286	80	79
S1630-62055-99	78286	79	65	S1630-62092-1	78286	80	85
S1630-62056-107	78286	77	118	S1630-62092-1	78286	81	68
S1630-62056-109	78286	77	117	S1630-62094	78286	79	
S1630-62056-111	78286	77	123	S1630-62098-1	78286	79	
S1630-62056-113	78286	77	61	S1630-62098-2	78286	79	
S1630-62056-117	78286	77	88	S1630-62105-5	78286	77	
S1630-62056-119	78286	77	93	S1630-62123-10	78286	79	4
S1630-62056-125	78286	77	59	S1630-62123-2	78286	79	
S1630-62056-131	78286	77	52	S1630-62123-9	78286	80	4
S1630-62056-133	78286	77	57	S1630-62123-9	78286	81	4
S1630-62056-135	78286	77	51	S1630-62124	78286	80	88
S1630-62056-137	78286	77	53	S1630-62124	78286	81	71
S1630-62056-141	78286	77	106	S1630-62125	78286	79	69
S1630-62056-141	78286	130	3	S1630-62126-1	78286	79	
S1630-62056-143	78286	77	107	S1630-62126-2	78286	79	56
S1630-62056-145	78286	77	112	S1630-62127	78286	78	12
S1630-62056-147	78286	77	58	S1630-62128	78286	78	29

REFERENCE NUMBER	MFG CODE	FIG NUMBER	ITEM NUMBER	REFERENCE NUMBER	MFG CODE	FIG NUMBER	ITEM NUMBER
S1630-62129	78286	78	1	S1630-62227	78286	79	174
S1630-62130	78286	78	23	S1630-62227	78286	80	115
S1630-62131-2	78286	79	170	S1630-62227	78286	81	98
S1630-62131-2	78286	80	111	S1630-62230-1	78286	79	106
S1630-62131-2	78286	81	94	S1630-62230-1	78286	79	117
S1630-62132-1	78286	79		S1630-62230-2	78286	79	124
S1630-62132-2	78286	79		S1630-62230-2	78286	79	99
S1630-62133	78286	79	50	S1630-62230-5	78286	79	110
S1630-62134	78286	80	139	S1630-62230-5	78286	79	121
S1630-62135	78286	79	53	S1630-62263-1	78286	77	
S1630-62135	78286	79	91	S1630-62400-4	78286	40	7
S1630-62135-2	78286	79	55	S1630-62400-4	78286	77	
S1630-62135-2	78286	79	93	S1630-62401-2	78286	77	128
S1630-62136	78286	79	88	S1630-62401-2	78286	79	
S1630-62139	78286	80	138	S1630-62401-31	78286	79	
S1630-62139	78286	81	117	S1630-62402-1	78286	77	133
S1630-62140	78286	80	46	S1630-62402-1	78286	80	
S1630-62140	78286	81	35	S1630-62403-1	78286	77	134
S1630-62143	78286	79	152	S1630-62403-1	78286	81	
S1630-62143	78286	80	125	S1630-62405-1	78286	79	
S1630-62143	78286	81	108	S1630-62405-2	78286	79	137
S1630-62145	78286	79	158	S1630-62408-3	78286	79	1
S1630-62145	78286	80	102	S1630-62409	78286	79	165
S1630-62145	78286	81	85	S1630-62409	78286	80	100
S1630-62146	78286	79	9	S1630-62409	78286	81	83
S1630-62146	78286	80	9	S1630-62410	78286	79	
S1630-62146	78286	81	9	S1630-62412	78286	79	
S1630-62147	78286	80	136	S1630-62413	78286	79	
S1630-62147	78286	81	119	S1630-62414	78286	79	
S1630-62149	78286	79	177	S1630-63000-3	78286	40	9
S1630-62150	78286	80	121	S1630-63000-3	78286	74	
S1630-62150	78286	81	104	S1630-63000-8	78286	74	3
S1630-62150-1	78286	80		S1630-63003-21	78286	76	
S1630-62150-1	78286	81		S1630-63003-25	78286	76	29
S1630-62153-1	78286	77	15	S1630-63003-25	78286	76	68
S1630-62154-4	78286	77	22	S1630-63003-5	78286	74	25
S1630-62158-1	78286	79		S1630-63003-5	78286	76	
S1630-62172-2	78286	77	104	S1630-63003-6	78286	75	38
S1630-62172-2	78286	77	108	S1630-63003-6	78286	76	
S1630-62172-2	78286	77	113	S1630-63004	78286	74	13
S1630-62172-2	78286	77	119	S1630-63004	78286	75	11
S1630-62172-2	78286	77	124	S1630-63006-13	78286	76	55
S1630-62172-2	78286	77	54	S1630-63007	78286	76	
S1630-62172-2	78286	77	56	S1630-63007-10	78286	76	
S1630-62172-2	78286	77	62	S1630-63007-11	78286	76	
S1630-62172-2	78286	77	64	S1630-63007-12	78286	76	
S1630-62172-2	78286	77	69	S1630-63007-9	78286	76	
S1630-62172-2	78286	77	75	S1630-63008	78286	76	44
S1630-62172-2	78286	77	80	S1630-63009	78286	76	
S1630-62172-2	78286	77	89	S1630-63010	78286	76	32
S1630-62172-2	78286	77	94	S1630-63010	78286	76	71
S1630-62172-2	78286	77	99	S1630-63011	78286	76	
S1630-62182	78286	79	83	S1630-63013	78286	76	
S1630-62194	78286	79	7	S1630-63014-1	78286	76	40
S1630-62194	78286	80	7	S1630-63015	78286	76	42
S1630-62194	78286	81	7	S1630-63016	78286	76	
S1630-62204	78286	77		S1630-63016-6	78286	76	
S1630-62205	78286	77		S1630-63016-7	78286	76	43
S1630-62223	78286	79	169	S1630-63018	78286	74	
S1630-62223	78286	80	107	S1630-63019	78286	75	
S1630-62223	78286	81	90	S1630-63024	78286	76	39
S1630-62224	78286	79		S1630-63025-1	78286	174	7
S1630-62224-1	78286	79	176	S1630-63025-11	78286	75	5
S1630-62224-1	78286	80	116	S1630-63025-3	78286	174	3
S1630-62224-1	78286	81	100	S1630-63025-5	78286	74	
S1630-62225	78286	79	168	S1630-63025-8	78286	174	25
S1630-62225	78286	80	106	S1630-63025-9	78286	174	
S1630-62225	78286	81	89	S1630-63026-13	78286	74	2
S1630-62226	78286	79	164	S1630-63026-15	78286	174	21
S1630-62226	78286	80	99	S1630-63026-17	78286	74	4
S1630-62226	78286	81	82	S1630-63026-18	78286	74	7

REFERENCE NUMBER	MFG CODE	FIG NUMBER	ITEM NUMBER	REFERENCE NUMBER	MFG CODE	FIG NUMBER	ITEM NUMBER
S1630-63026-19	78286	75	14	S1630-63048-30	78286	75	70
S1630-63026-2	78286	74		S1630-63048-31	78286	74	55
S1630-63026-21	78286	75	7	S1630-63048-31	78286	75	68
S1630-63026-23	78286	75	12	S1630-63048-32	78286	74	
S1630-63026-5	78286	76	7	S1630-63048-32	78286	75	
S1630-63026-7	78286	174	15	S1630-63048-35	78286	74	58
S1630-63026-9	78286	174	11	S1630-63048-35	78286	75	71
S1630-63027	78286	74		S1630-63048-36	78286	74	48
S1630-63027-1	78286	74	19	S1630-63048-36	78286	75	61
S1630-63027-1	78286	75	32	S1630-63048-37	78286	74	47
S1630-63029	78286	76	16	S1630-63048-37	78286	75	60
S1630-63029	78286	76	57	S1630-63048-38	78286	74	51
S1630-63030-3	78286	76	48	S1630-63048-38	78286	75	64
S1630-63030-4	78286	76	50	S1630-63048-39	78286	74	
S1630-63030-5	78286	74		S1630-63048-39	78286	75	
S1630-63032	78286	74		S1630-63048-4	78286	75	
S1630-63032	78286	75		S1630-63048-40	78286	74	31
S1630-63032-2	78286	74		S1630-63048-40	78286	75	41
S1630-63032-2	78286	75		S1630-63048-40	78286	75	44
S1630-63033-3	78286	77	10	S1630-63048-41	78286	74	
S1630-63034-1	78286	74	26	S1630-63048-41	78286	75	
S1630-63034-1	78286	75	39	S1630-63048-5	78286	74	34
S1630-63035-1	78286	74	60	S1630-63048-5	78286	75	47
S1630-63035-1	78286	75	73	S1630-63048-6	78286	74	45
S1630-63035-2	78286	74		S1630-63048-6	78286	75	58
S1630-63035-2	78286	75		S1630-63048-7	78286	74	41
S1630-63035-5	78286	74	66	S1630-63048-7	78286	75	54
S1630-63035-5	78286	75	82	S1630-63048-8	78286	75	57
S1630-63035-6	78286	74		S1630-63048-9	78286	74	52
S1630-63035-6	78286	75		S1630-63048-9	78286	75	65
S1630-63035-7	78286	74		S1630-63051	78286	76	15
S1630-63035-7	78286	75		S1630-63052	78286	76	11
S1630-63035-8	78286	74	68	S1630-63057-1	96772	74	20
S1630-63035-8	78286	75	84	S1630-63057-1	96772	75	33
S1630-63037	78286	76		S1630-63100-2	78286	40	
S1630-63037-5	78286	76	28	S1630-63100-2	78286	75	
S1630-63037-5	78286	76	67	S1630-63100-3	78286	75	6
S1630-63038	78286	76		S1630-63103	78286	75	
S1630-63038-5	78286	76	24	S1630-80000-7	78286	167	
S1630-63038-5	78286	76	63	S1630-80100	78286	167	
S1630-63039	78286	74	21	S1630-80100-2	78286	167	
S1630-63039	78286	75	34	S1630-80100-3	78286	167	8
S1630-63040-2	78286	74	17	S1630-80100-3	78286	176	
S1630-63040-2	78286	75	30	S1630-80101-1	78286	176	33
S1630-63041-5	78286	76	34	S1630-80102-10	78286	176	59
S1630-63041-5	78286	76	73	S1630-80102-3	78286	176	
S1630-63042	78286	74	24	S1630-80106-6	78286	176	42
S1630-63042	78286	75	37	S1630-80107-6	78286	176	41
S1630-63043-1	78286	74		S1630-80113-5	78286	176	34
S1630-63044	78286	74		S1630-80113-6	78286	176	35
S1630-63044	78286	75		S1630-80117	78286	176	14
S1630-63045	78286	76	30	S1630-80117	78286	176	17
S1630-63045	78286	76	69	S1630-80122	78286	176	38
S1630-63048-1	78286	74		S1630-80124-1	78286	173	42
S1630-63048-10	78286	74	53	S1630-80124-10	78286	173	35
S1630-63048-10	78286	75	66	S1630-80124-11	78286	173	
S1630-63048-11	78286	74	38	S1630-80124-9	78286	173	
S1630-63048-11	78286	75	51	S1630-80125	78286	173	
S1630-63048-12	78286	74	42	S1630-80127-1	78286	173	38
S1630-63048-12	78286	75	55	S1630-80127-2	78286	173	45
S1630-63048-2	78286	74		S1630-80127-6	78286	173	
S1630-63048-25	78286	74	56	S1630-80127-8	78286	173	
S1630-63048-25	78286	75	69	S1630-80128-1	78286	173	
S1630-63048-27	78286	74	50	S1630-80200-1	78286	167	7
S1630-63048-27	78286	75	63	S1630-80200-1	78286	175	
S1630-63048-28	78286	74		S1630-80308-1	78286	172	105
S1630-63048-28	78286	75		S1630-80309-2	78286	172	
S1630-63048-29	78286	74	49	S1630-80309-3	78286	172	
S1630-63048-29	78286	75	62	S1630-80309-5	78286	172	
S1630-63048-3	78286	75	72	S1630-80309-6	78286	172	
S1630-63048-30	78286	74	57	S1630-80311	78286	167	4

REFERENCE NUMBER	MFG CODE	FIG NUMBER	ITEM NUMBER	REFERENCE NUMBER	MFG CODE	FIG NUMBER	ITEM NUMBER
S1630-80311	78286	172		S1630-80400-4	78286	167	2
S1630-80314-24	78286	172	21	S1630-80400-4	78286	170	
S1630-80314-25	78286	172	3	S1630-80402	78286	170	42
S1630-80314-26	78286	172	66	S1630-80410-1	78286	170	32
S1630-80314-27	78286	172	41	S1630-80410-2	78286	170	28
S1630-80317-2	78286	172		S1630-80410-6	78286	170	31
S1630-80317-3	78286	172	97	S1630-80411-7	78286	170	29
S1630-80317-5	78286	172	95	S1630-80413-2	78286	170	15
S1630-80332	78286	170		S1630-80416	78286	170	5
S1630-80332-4	78286	170	41	S1630-80423	78286	170	18
S1630-80338	78286	176	48	S1630-80424-4	78286	170	
S1630-80338-19	78286	176	57	S1630-80424-6	78286	170	7
S1630-80338-2	78286	176	54	S1630-80425-33	78286	170	35
S1630-80338-21	78286	176	52	S1630-80427	78286	170	40
S1630-80338-24	78286	176	50	S1630-80428-1	78286	170	1
S1630-80338-25	78286	176	49	S1630-80428-2	78286	170	2
S1630-80338-31	78286	176	57	S1630-80429	78286	170	39
S1630-80338-33	78286	176		S1630-80429	78286	170	4
S1630-80339-1	78286	176	1	S1630-80430-3	78286	169	91
S1630-80339-17	78286	176	5	S1630-80431	78286	170	38
S1630-80339-18	78286	176		S1630-80432-5	78286	170	21
S1630-80339-2	78286	176	2	S1630-80433	78286	170	
S1630-80339-7	78286	176	7	S1630-80433-1	78286	170	36
S1630-80339-8	78286	176		S1630-80438-1	78286	170	23
S1630-80339-9	78286	176	8	S1630-80500	78286	167	6
S1630-80340-1	78286	176	47	S1630-80500	78286	174	
S1630-80349-1	78286	172	91	S1630-80502	78286	174	13
S1630-80351-14	78286	172	1	S1630-80502	78286	174	23
S1630-80351-7	78286	172	47	S1630-80600-1	78286	167	5
S1630-80351-7	78286	172	87	S1630-80600-1	78286	173	
S1630-80353	78286	172		S1630-80601-35	78286	173	
S1630-80353-8	78286	172	20	S1630-80601-37	78286	173	
S1630-80355-15	78286	172	60	S1630-80602-1	78286	173	6
S1630-80358-1	78286	176	12	S1630-80602-2	78286	173	9
S1630-80358-2	78286	176	13	S1630-80602-3	78286	173	1
S1630-80358-8	78286	176	9	S1630-80602-4	78286	173	4
S1630-80361-1	78286	172		S1630-80602-7	78286	173	15
S1630-80361-10	78286	172	52	S1630-80602-8	78286	173	18
S1630-80361-21	78286	172	39	S1630-80603-11	78286	173	13
S1630-80361-26	78286	172	64	S1630-80603-13	78286	173	14
S1630-80361-9	78286	172	53	S1630-80603-19	78286	173	
S1630-80365	78286	176		S1630-80603-25	78286	77	
S1630-80365-4	78286	176	73	S1630-80603-31	78286	77	
S1630-80366	78286	176	79	S1630-80603-7	78286	173	11
S1630-80368-1	78286	176	82	S1630-80603-9	78286	173	12
S1630-80368-2	78286	176	80	S1630-80605	78286	173	
S1630-80368-3	78286	176	81	S1630-80719-12	78286	170	
S1630-80369	78286	176		S1630-80719-6	78286	170	
S1630-80369-1	78286	176	74	S1630-80800-1	78286	167	
S1630-80369-1	78286	176	76	S1630-80800-1	78286	169	
S1630-80370	78286	176	78	S1630-80800-5	78286	169	57
S1630-80372	78286	172	30	S1630-80800-5	78286	169	59
S1630-80372	78286	172	75	S1630-80800-5	78286	169	64
S1630-80373	78286	172	36	S1630-80800-5	78286	169	66
S1630-80373	78286	172	81	S1630-80800-5	78286	169	78
S1630-80374	78286	172	33	S1630-80800-5	78286	169	80
S1630-80374	78286	172	78	S1630-80800-6	78286	169	23
S1630-80375	78286	172	37	S1630-80801	78286	169	68
S1630-80375	78286	172	82	S1630-80802	78286	169	71
S1630-80376	78286	172	34	S1630-80802-3	78286	169	73
S1630-80376	78286	172	79	S1630-80803-1	78286	169	28A
S1630-80377	78286	172	32	S1630-80803-1	78286	169	44A
S1630-80377	78286	172	77	S1630-80803-2	78286	169	25
S1630-80378-1	78286	172	99	S1630-80803-2	78286	169	32
S1630-80381	78286	174		S1630-80804-5	78286	169	49
S1630-80383-1	78286	172		S1630-80804-6	78286	169	50
S1630-80383-1	78286	172	100	S1630-80805	78286	169	68A
S1630-80385	78286	172	93	S1630-80810	78286	169	33
S1630-80385-2	78286	172		S1630-80811-1	78286	169	
S1630-80385-2	78286	172	106	S1630-80811-2	78286	56	98
S1630-80400-2	78286	170		S1630-80811-3	78286	169	39

REFERENCE NUMBER	MFG CODE	FIG NUMBER	ITEM NUMBER	REFERENCE NUMBER	MFG CODE	FIG NUMBER	ITEM NUMBER
S1630-80814	78286	169	90	S1635-20003-2	78286	27	
S1630-80815	78286	169		S1635-20004	78286	23	
S1630-80815-1	78286	169		S1635-20004-1	78286	23	
S1630-80815-2	78286	169		S1635-20004-2	78286	23	30
S1630-80815-4	78286	169		S1635-20005-2	78286	26	20
S1630-80815-5	78286	169	4	S1635-20005-3	78286	26	
S1630-80816-12	78286	169	81	S1635-20005-3	78286	26	27
S1630-80816-13	78286	169	82	S1635-20006-1	78286	24	
S1630-80816-8	78286	169		S1635-20006-3	78286	24	13
S1630-80817-12	78286	169	17	S1635-20007-2	78286	23	20
S1630-80817-13	78286	169		S1635-20007-2	78286	24	
S1630-80817-13	78286	169	18	S1635-20008	78286	26	
S1630-80817-14	78286	169	7	S1635-20008	78286	26	21
S1630-80817-2	78286	169	11	S1635-20009	78286	27	
S1630-80817-3	78286	169	15	S1635-20009-1	78286	27	18
S1630-80817-8	78286	169		S1635-20010-9	78286	25	91
S1630-80817-9	78286	169	19	S1635-20010-9	78286	26	
S1630-80818	78286	169		S1635-20011-2	78286	27	
S1630-80818-1	78286	169		S1635-20012-1	78286	27	15
S1630-80818-3	78286	169	8	S1635-20013-2	78286	26	
S1630-80819	78286	169	67	S1635-20013-4	78286	26	33
S1630-80820-6	78286	169	3	S1635-20014-3	78286	25	22
S1630-80821-1	78286	56	55	S1635-20016	78286	27	5
S1630-80826	78286	169		S1635-20017-3		KITS	
S1630-80826-1	78286	169	52	S1635-20017-3	78286	27	16
S1630-80828	78286	169	20	S1635-20021	78286	27	
S1630-80829	78286	169	84	S1635-20021-1		KITS	
S1630-80830	78286	169	86	S1635-20021-1	78286	27	7
S1630-80831-1	78286	169	60	S1635-20022	78286	27	6
S1630-80831-2	78286	169	56	S1635-20023	78286	26	
S1630-80831-3	78286	169	58	S1635-20023-2	78286	26	
S1630-80832-4	78286	169	62	S1635-20023-3	78286	26	32
S1630-80839-10	78286	176		S1635-20024		KITS	
S1630-80900-3	78286	167	3	S1635-20024	78286	27	12
S1630-80900-3	78286	171		S1635-20026-2	78286	27	3
S1630-80901-1	78286	171		S1635-20027	78286	27	2
S1630-80901-2	78286	171		S1635-20029	78286	26	14
S1630-80901-3	78286	171		S1635-20031	78286	25	90
S1630-80901-30	78286	171	18	S1635-20034	78286	25	
S1630-80901-31	78286	171	20	S1635-20035	78286	25	37
S1630-80901-39	78286	171	11	S1635-20037	78286	26	29
S1630-80901-40	78286	171	15	S1635-20039	78286	23	39
S1630-80901-45	78286	171	12	S1635-20040	78286	23	38
S1630-80901-46	78286	171	13	S1635-20043	78286	26	
S1630-80901-47	78286	171	14	S1635-20043-15	78286	26	19
S1630-80901-48	78286	171	16	S1635-20044	78286	26	
S1630-80901-49	78286	171	17	S1635-20046	78286	26	
S1630-80901-50	78286	171	21	S1635-20046-2	78286	26	7
S1630-80901-51	78286	171	22	S1635-20047	78286	24	
S1630-80901-7	78286	171		S1635-20047-2	78286	24	29
S1630-80901-71	78286	171		S1635-20048	78286	24	28
S1630-80901-73	78286	171	19	S1635-20048	78286	24	31
S1630-80901-8	78286	171		S1635-20049	78286	24	21
S1630-80903-30	78286	171		S1635-20050-1		KITS	
S1630-80903-31	78286	171	1	S1635-20050-1	78286	25	13
S1630-80903-32	78286	171	3	S1635-20051	78286	24	
S1630-80903-33	78286	171	5	S1635-20054	78286	24	
S1630-80903-34	78286	171	7	S1635-20054-1	78286	24	14
S1630-80903-35	78286	171	9	S1635-20055	78286	24	24
S1635-20000-12	78286	11		S1635-20056	78286	24	26
S1635-20000-14	78286	11		S1635-20056	78286	24	8
S1635-20000-15	78286	11		S1635-20057-1	78286	24	7
S1635-20000-16	78286	11		S1635-20058-2	78286	23	16
S1635-20000-19	78286	11	48	S1635-20059-2	78286	24	10
S1635-20000-19	78286	22		S1635-20060	78286	24	18
S1635-20000-24	78286	11		S1635-20061	78286	23	12
S1635-20001-17	78286	22	12	S1635-20062	78286	24	
S1635-20001-17	78286	25		S1635-20062-1	78286	24	3
S1635-20002-5	78286	22	1	S1635-20065	78286	24	9
S1635-20002-5	78286	23		S1635-20068-2	78286	28	27
S1635-20003-2	78286	25	96	S1635-20072-1	78286	29	13

REFERENCE NUMBER	MFG CODE	FIG NUMBER	ITEM NUMBER
S1635-20073-1	78286	29	12
S1635-20074-1	78286	29	11
S1635-20075-2	78286	25	79
S1635-20076-2	78286	25	74
S1635-20077-3	78286	25	64
S1635-20078	78286	25	36
S1635-20079	78286	25	
S1635-20079-1		KITS	
S1635-20079-1	78286	25	92
S1635-20080	78286	22	
S1635-20080-1		KITS	
S1635-20080-1	78286	22	5
S1635-20080-1	78286	23	19
S1635-20081		KITS	
S1635-20081	78286	25	83
S1635-20082-1		KITS	
S1635-20082-1	78286	23	23
S1635-20083	78286	23	37
S1635-20084-5	78286	25	
S1635-20084-5	78286	30	
S1635-20084-7	78286	25	97
S1635-20084-7	78286	30	
S1635-20085-1	78286	24	6
S1635-20086-1	78286	30	5
S1635-20087-1	78286	30	6
S1635-20088-1	78286	29	8
S1635-20089-1	78286	30	4
S1635-20090-1	78286	29	7
S1635-20091-1	78286	29	6
S1635-20092-1	78286	25	69
S1635-20093	78286	25	
S1635-20093-2	78286	25	53
S1635-20094-2	78286	25	61
S1635-20095-1		KITS	
S1635-20095-1	78286	24	16
S1635-20095-1	78286	25	95
S1635-20096	78286	23	
S1635-20096	78286	24	
S1635-20096-1		KITS	
S1635-20096-1	78286	23	11
S1635-20096-1	78286	24	2
S1635-20097	78286	23	34
S1635-20098	78286	23	10
S1635-20099	78286	26	6
S1635-20100	78286	30	7
S1635-20105	78286	25	
S1635-20105-1	78286	25	5
S1635-20106	78286	25	
S1635-20106-1		KITS	
S1635-20106-1	78286	25	6
S1635-20107	78286	25	
S1635-20107-1		KITS	
S1635-20107-1	78286	25	7
S1635-20108	78286	23	35
S1635-20110		KITS	
S1635-20110	78286	26	15
S1635-20112	78286	23	36
S1635-20113	78286	26	
S1635-20113-3	78286	26	1
S1635-20114		KITS	
S1635-20114	78286	26	4
S1635-20115	78286	26	
S1635-20115-2	78286	26	35
S1635-20116	78286	30	2
S1635-20118		KITS	
S1635-20118	78286	25	82
S1635-20119	78286	29	1
S1635-20120-2	78286	25	
S1635-20120-2	78286	29	
S1635-20120-6	78286	25	43
S1635-20120-6	78286	29	

REFERENCE NUMBER	MFG CODE	FIG NUMBER	ITEM NUMBER
S1635-20121	78286	23	21
S1635-20122-1		KITS	
S1635-20122-1	78286	25	86
S1635-20123-1		KITS	
S1635-20123-1	78286	25	45
S1635-20124	78286	23	7
S1635-20125	78286	23	8
S1635-20126	78286	23	6
S1635-20127		KITS	
S1635-20127	78286	25	67
S1635-20127	78286	25	72
S1635-20128		KITS	
S1635-20128	78286	25	54
S1635-20131-1	78286	25	58
S1635-20133	78286	26	11
S1635-20135	78286	25	85
S1635-20140	78286	23	27
S1635-20141-1	78286	31	39
S1635-20141-12	78286	31	
S1635-20141-16	78286	31	15
S1635-20141-16	78286	31	18
S1635-20141-16	78286	31	30
S1635-20141-21	78286	31	32
S1635-20141-22	78286	31	33
S1635-20141-30	78286	31	
S1635-20141-32	78286	31	24
S1635-20141-34	78286	31	34
S1635-20141-39	78286	11	2
S1635-20141-39	78286	31	
S1635-20141-50	78286	31	
S1635-20141-52	78286	31	8
S1635-20141-56	78286	31	1
S1635-20147	78286	24	19
S1635-20148-3	78286	25	50
S1635-20149	78286	23	13
S1635-20149-1	78286	23	15
S1635-20151	78286	24	27
S1635-20152	78286	24	22
S1635-20152	78286	24	32
S1635-20153	78286	24	11
S1635-20154	78286	24	12
S1635-20156	78286	25	
S1635-20156-1	78286	25	
S1635-20156-2	78286	25	24
S1635-20157	78286	25	71
S1635-20158	78286	25	66
S1635-20159	78286	25	57
S1635-20160	78286	25	76
S1635-20160	78286	25	78
S1635-20161	78286	31	
S1635-20161-1	78286	31	
S1635-20162	78286	31	13
S1635-20162	78286	31	28
S1635-20163-2	78286	28	25
S1635-20165	78286	25	
S1635-20165-1		KITS	
S1635-20165-1	78286	25	94
S1635-20165-2		KITS	
S1635-20168	78286	25	8
S1635-20172	78286	25	26
S1635-20173	78286	28	32
S1635-20174	78286	23	26
S1635-20175	78286	26	9
S1635-20176		KITS	
S1635-20176	78286	27	9
S1635-20178	78286	28	31
S1635-20179		KITS	
S1635-20179	78286	27	10
S1635-20181	78286	11	
S1635-20181-14	78286	11	13
S1635-20181-2	78286	11	14

REFERENCE NUMBER	MFG CODE	FIG NUMBER	ITEM NUMBER	REFERENCE NUMBER	MFG CODE	FIG NUMBER	ITEM NUMBER
S1635-20182	78286	26		S1635-61222	78286	82	
S1635-20182-1	78286	26	16	S1635-61222-1	78286	82	87
S1635-20183-2	78286	25	15	S1635-61226	78286	82	48
S1635-20184-1	78286	26	34	S1635-61227-1	78286	82	
S1635-20185	78286	31	4	S1635-61227-5	78286	82	71
S1635-20187		KITS		S1635-61228-3	78286	82	23
S1635-20187	78286	26		S1635-61229-3	78286	82	1
S1635-20187	78286	26	23	S1635-61230-5	78286	40	1
S1635-20190	78286	25	81	S1635-61230-5	78286	82	
S1635-20205	78286	25	11	S1635-61232	78286	82	45
S1635-20208	78286	25	46	S1635-61232-1	78286	82	
S1635-20209	78286	25	47	S1635-63000-1	78286	150	3
S1635-20214	78286	29	10	S1635-63000-1	78286	151	
S1635-61100	78286	82	20	S1635-63001-2	78286	151	11
S1635-61100	78286	83		S1635-63001-3	78286	151	
S1635-61100-1	78286	83	7	S1635-63001-5	78286	151	
S1635-61101	78286	83		S1635-63301-1	78286	155	
S1635-61103	78286	83	33	S1635-63301-2	78286	155	1
S1635-61109-1	78286	83	30	S1635-63301-2	78286	156	
S1635-61111	78286	83	20	S1635-63302-1	78286	156	9
S1635-61112	78286	83	23	S1635-63303	78286	156	24
S1635-61113	78286	83	19	S1635-63304	78286	151	18
S1635-61120-1	78286	84		S1635-63305	78286	156	11
S1635-61120-5	78286	82		S1635-63311	78286	156	
S1635-61120-5	78286	84		S1635-63311-1	78286	156	22
S1635-61121-1	78286	84	16	S1635-63313	78286	151	25
S1635-61122	78286	84	45	S1635-63314	78286	151	
S1635-61123	78286	84	23	S1635-63315	78286	156	
S1635-61124	78286	84	19	S1635-63316	78286	156	13
S1635-61127	78286	84	46	S1635-63317	78286	151	22
S1635-61128	78286	84	25	S1635-63318	78286	156	
S1635-61132	78286	82	41	S1635-63318-1	78286	156	8
S1635-61133	78286	82	40	S1635-63321	78286	156	21
S1635-61136-1	78286	84	43	S1635-63322	78286	156	17
S1635-61138	78286	83	35	S1635-63323	78286	156	4
S1635-61138	78286	84	13	S1635-63324	78286	155	4
S1635-61202	78286	82		S1635-63325	78286	156	19
S1635-61202-1	78286	82		S1635-63326	78286	156	
S1635-61202-2	78286	82	4	S1635-63327	78286	156	6
S1635-61202-2	78286	82	49	S1635-63328	78286	156	
S1635-61202-2	78286	82	6	S1635-63328	78286	156	12
S1635-61202-2	78286	82	73	S1635-63329	78286	156	2
S1635-61202-2	78286	155	24	S1635-63330	78286	156	7
S1635-61202-2	78286	155	8	S1635-63331	78286	156	1
S1635-61204-1	78286	82	81	S1635-63333	78286	151	28
S1635-61204-1	78286	151		S1635-63350	78286	82	
S1635-61204-1	78286	151	29	S1635-63350-2	78286	82	
S1635-61204-1	78286	155	30	S1635-63350-4	78286	82	51
S1635-61205	78286	82	62	S1635-63350-4	78286	82	75
S1635-61205	78286	82	66	S1635-63350-4	78286	82	9
S1635-61205	78286	82	70	S1635-63350-4	78286	151	12
S1635-61205	78286	151	10	S1635-63350-4	78286	155	10
S1635-61205	78286	151	3	S1635-63350-4	78286	155	26
S1635-61205	78286	151	7	S1635-63351	78286	82	14
S1635-61205	78286	155	20	S1635-63351	78286	82	30
S1635-61206-2	78286	82	85	S1635-63351	78286	82	39
S1635-61206-2	78286	151	32	S1635-63351	78286	82	56
S1635-61206-2	78286	155	33	S1635-63351	78286	82	80
S1635-61208	78286	82		S1635-63351	78286	151	17
S1635-61208	78286	155	34	S1635-63351	78286	151	27
S1635-61209	78286	82	86	S1635-63351	78286	155	13
S1635-61209	78286	151	33	S1635-63351	78286	155	29
S1635-61210	78286	82	42	S1635-63352	78286	82	13
S1635-61210	78286	82	44	S1635-63352	78286	82	29
S1635-61210	78286	82	82	S1635-63352	78286	82	38
S1635-61210	78286	82	84	S1635-63352	78286	82	55
S1635-61210	78286	151	31	S1635-63352	78286	82	79
S1635-61210	78286	155	32	S1635-63352	78286	151	16
S1635-61219	78286	82	34	S1635-63352	78286	151	26
S1635-61220	78286	82	25	S1635-63352	78286	155	12
S1635-61221-1	78286	82	46	S1635-63352	78286	155	28

REFERENCE NUMBER	MFG CODE	FIG NUMBER	TEM NUMBER	REFERENCE NUMBER	MFG CODE	FIG NUMBER	ITEM NUMBER
S1635-63353	78286	82	11	S1635-64063-1	78286	158	5
S1635-63353	78286	82	27	S1635-64065	78286	158	25
S1635-63353	78286	82	36	S1635-64066		KITS	
S1635-63353	78286	82	53	S1635-64066	78286	158	44
S1635-63353	78286	82	77	S1635-64068	78286	158	19
S1635-63353	78286	151	14	S1635-64071	78286	158	69
S1635-63353	78286	151	20	S1635-64072		KITS	
S1635-63353	78286	155		S1635-64072	78286	158	18
S1635-63354	78286	82		S1635-64073	78286	158	71
S1635-64000	78286	155		S1635-64100-1	78286	155	
S1635-64000-1	78286	155		S1635-64100-2	78286	155	
S1635-64000-2	78286	155		S1635-64100-3	78286	155	38
S1635-64000-3	78286	155	40	S1635-64100-3	78286	157	
S1635-64000-3	78286	158		S1635-64101-1	78286	157	50
S1635-64000-3	78286	158	52	S1635-64102	78286	157	
S1635-64001	78286	158		S1635-64102-2	78286	157	7
S1635-64002-1	78286	158	96	S1635-64103	78286	157	
S1635-64003-1	78286	158	81	S1635-64103-1	78286	157	
S1635-64004-1	78286	158	72	S1635-64103-2	78286	157	30
S1635-64005	78286	158	76	S1635-64105	78286	157	14
S1635-64006-1	78286	158	89	S1635-64106	78286	157	44
S1635-64007-1	78286	158	66	S1635-64107	78286	157	22
S1635-64008	78286	158	97	S1635-64108	78286	157	39
S1635-64012	78286	158	78	S1635-64111-2	78286	157	56
S1635-64015	78286	158	12	S1635-64111-4	78286	157	58
S1635-64016	78286	158		S1635-64116	78286	157	36
S1635-64016-1	78286	158	94	S1635-64117	78286	157	16
S1635-64016-3	78286	158	90	S1635-64117	78286	157	45
S1635-64017	78286	158	61	S1635-64118	78286	157	17
S1635-64019	78286	158	22	S1635-64118	78286	157	46
S1635-64020	78286	158	21	S1635-64119	78286	157	21
S1635-64022	78286	158	62	S1635-64119	78286	157	38
S1635-64025	78286	158	93	S1635-64120	78286	156	16
S1635-64027		KITS		S1635-64120	78286	157	11
S1635-64027	78286	158	84	S1635-64120	78286	157	34
S1635-64028		KITS		S1635-64125	78286	156	15
S1635-64028	78286	158	56	S1635-64125	78286	157	10
S1635-64032	78286	158	48	S1635-64125	78286	157	33
S1635-64036	78286	158	34	S1635-64125	78286	158	55
S1635-64037	78286	158	39	S1635-64126		KITS	
S1635-64038		KITS		S1635-64126	78286	157	24
S1635-64038	78286	158	36	S1635-64126	78286	157	47
S1635-64038	78286	158	41	S1635-64127	78286	157	2
S1635-64039		KITS		S1635-64128		KITS	
S1635-64039	78286	158	11	S1635-64128	78286	157	
S1635-64040	78286	158	9	S1635-64128-1	78286	157	4
S1635-64041		KITS		S1635-64129		KITS	
S1635-64041-1	78286	158	10	S1635-64129	78286	157	3
S1635-64042-1	78286	158	6	S1635-64129	78286	157	5
S1635-64043		KITS		S1635-64136		KITS	
S1635-64043	78286	158	13	S1635-64136	78286	157	29
S1635-64044	78286	158	91	S1635-64139-2	78286	157	23
S1635-64045		KITS		S1635-64139-3		KITS	
S1635-64045	78286	158	80	S1635-64139-3	78286	157	40
S1635-64046		KITS		S1635-64140		KITS	
S1635-64046	78286	158	95	S1635-64140	78286	157	41
S1635-64047	78286	158	67	S1635-64151-1	78286	157	25
S1635-64050	78286	158	3	S1635-64300-4	78286	154	1
S1635-64051		KITS		S1635-64300-4	78286	155	
S1635-64051	78286	158	68	S1635-64301-1	78286	155	
S1635-64052	78286	158	27	S1635-64301-3	78286	155	21
S1635-64053	78286	158	51	S1635-64301-4	78286	155	
S1635-64054-1	78286	158	28	S1635-64301-5	78286	155	
S1635-64055-1	78286	158	26	S1635-64302-2	78286	155	6
S1635-64057	78286	158	46	S1635-64310	78286	155	35
S1635-64059-1		KITS		S1635-64311	78286	82	
S1635-64059-1	78286	158	60	S1635-64311-1	78286	82	15
S1635-64060	78286	158	59	S1635-64311-1	78286	155	14
S1635-64061-2	78286	158	33	S1635-64312-1	78286	82	17
S1635-64062	78286	158		S1635-64312-1	78286	82	47
S1635-64062-2	78286	158	29	S1635-64312-1	78286	82	8

REFERENCE NUMBER	MFG CODE	FIG NUMBER	ITEM NUMBER	REFERENCE NUMBER	MFG CODE	FIG NUMBER	ITEM NUMBER
S1635-64312-1	78286	82	89	S1635-91073	78286	179	18
S1635-64312-1	78286	155	16	S1635-91075-2	78286	177	
S1635-64312-1	78286	155	37	S1635-91076	78286	179	15
S1635-64312-1	78286	155	5	S1635-91082-2	78286	182	
S1635-64312-2	78286	82		S1635-91083-2	78286	179	21
S1635-64312-2	78286	155		S1635-91085	78286	178	
S1635-64312-3	78286	82		S1635-91085-3	78286	178	72
S1635-64312-3	78286	155		S1635-91086	78286	178	
S1635-64312-4	78286	82		S1635-91087	78286	177	
S1635-64312-5	78286	82		S1635-91088	78286	179	1
S1635-64312-5	78286	155		S1635-91091	78286	179	
S1635-90000-4	78286	182		S1635-91093-1	78286	179	7
S1635-91000-15	78286	177		S1635-91094	78286	178	
S1635-91000-16	78286	177		S1635-91094-2	78286	178	40
S1635-91000-18	78286	177		S1635-91095	78286	178	
S1635-91000-20	78286	177		S1635-91095-1	78286	178	15
S1635-91000-22	78286	177		S1635-91097	78286	178	56
S1635-91000-24	78286	177		S1635-91098	78286	178	49
S1635-91000-26	78286	177		S1635-91100-1	78286	167	10
S1635-91002	78286	178	31	S1635-91100-1	78286	177	
S1635-91003-5	78286	178	16	S1635-91101-1	78286	177	
S1635-91004	78286	177	3	S1635-91101-8	78286	177	2
S1635-91005-1	78286	177		S1635-91101-8	78286	178	
S1635-91006	78286	179	9	S1635-91102	78286	177	
S1635-91007	78286	179	11	S1635-91102-1	78286	177	
S1635-91008-2	78286	178	64	S1635-91102-2	78286	177	
S1635-91016-2	78286	178		S1635-91102-5	78286	177	
S1635-91021	78286	178	17	S1635-91102-6	78286	177	
S1635-91022	78286	178	24	S1635-91102-8	78286	177	6
S1635-91023	78286	178		S1635-91102-8	78286	179	
S1635-91023-1	78286	178	26	S1635-91110-1	78286	178	
S1635-91024	78286	178	44	S1635-91113	78286	178	1
S1635-91027-2	78286	178	6	S1635-91114	78286	178	
S1635-91028	78286	179	17	S1635-91115	78286	178	71
S1635-91033	78286	177	5	S1635-9190	78286	178	52
S1635-91037	78286	179	4	S1635-92000-1	78286	182	1
S1635-91038-2	78286	178	11	S1635-92000-1	78286	183	
S1635-91038-3	78286	178	8	S1635-92001-2	78286	183	
S1635-91039	78286	178		S1635-92001-3	78286	183	8
S1635-91039-2	78286	178		S1635-92003-2	78286	183	
S1635-91041	78286	178	66	S1635-92003-3	78286	183	12
S1635-91041-1	78286	178		S1635-92004-2	78286	183	
S1635-91043	78286	178		S1635-92004-4	78286	183	4
S1635-91043-3	78286	178		S1635-92004-5	78286	183	5
S1635-91043-4	78286	178		S1635-92004-6	78286	183	6
S1635-91043-7	78286	178	55	S1635-92005	78286	183	10
S1635-91044-3	78286	178		S1635-92006	78286	183	1
S1635-91044-5	78286	178		S1640-61102	78286	88	37
S1635-91044-7	78286	178	42	S1640-61104	78286	88	36
S1635-91045	78286	178		S1640-61105	78286	88	35
S1635-91045-1	78286	178		S1640-61112-3	78286	89	1
S1635-91047-1	78286	178	3	S1640-61115	78286	87	
S1635-91049-6	78286	182	13	S1640-61115-1	78286	87	6
S1635-91050-17	78286	182	11	S1640-61116	78286	88	
S1635-91050-19	78286	182	4	S1640-61116-1	78286	88	32
S1635-91051	78286	178		S1640-61117-1	78286	88	22
S1635-91051-2	78286	178		S1640-61117-1	78286	89	4
S1635-91051-3	78286	178	61	S1640-61118-1	78286	89	5
S1635-91052	78286	178	47	S1640-61119-2	78286	88	23
S1635-91054	78286	178		S1640-61119-2	78286	89	
S1635-91054-1	78286	178		S1640-61120-8	78286	87	17
S1635-91054-2	78286	178	46	S1640-61120-8	78286	87	36
S1635-91058	78286	178		S1640-61123	78286	88	27
S1635-91058-1	78286	178	59	S1640-61124	78286	87	63
S1635-91059	78286	178	2	S1640-61124	78286	88	
S1635-91062	78286	182		S1640-61124-1	78286	88	24
S1635-91063	78286	178		S1640-61124-1	78286	88	31
S1635-91068	78286	179		S1640-61125	78286	88	
S1635-91069	78286	179		S1640-61126	78286	88	
S1635-91070	78286	179		S1640-61126-1	78286	88	
S1635-91072	78286	179	19	S1640-61128	78286	88	

REFERENCE NUMBER	MFG CODE	FIG NUMBER	ITEM NUMBER	REFERENCE NUMBER	MFG CODE	FIG NUMBER	ITEM NUMBER
S1640-61128-1	78286	88	38	S1640-61219	78286	93	
S1640-61130	78286	88		S1640-61219-1	78286	93	14
S1640-61130-1	78286	88	2	S1640-61227	78286	91	49
S1640-61132	78286	88	7	S1640-61229-1	78286	91	
S1640-61134	78286	88		S1640-61229-4	78286	87	
S1640-61136	78286	88		S1640-61229-5	78286	87	124
S1640-61136-1	78286	88		S1640-61231-1	78286	93	6
S1640-61138	78286	88		S1640-61231-2	78286	93	28
S1640-61138-1	78286	88	25	S1640-61233	78286	91	
S1640-61141-1	78286	88	10	S1640-61233-1	78286	91	41
S1640-61142	78286	88		S1640-61237	78286	91	
S1640-61142-1	78286	88	17	S1640-61237-1	78286	91	17
S1640-61144	78286	88		S1640-61237-1	78286	91	20
S1640-61144-1	78286	88	21	S1640-61242-1	78286	87	
S1640-61147-3	78286	89	6	S1640-61243	78286	87	
S1640-61150-1	78286	88	8	S1640-61243-1	78286	87	90
S1640-61151-1	78286	87		S1640-61243-2	78286	87	93
S1640-61151-2	78286	87	70	S1640-61243-3	78286	87	94
S1640-61153-1	78286	87		S1640-61244-1	78286	87	79
S1640-61153-2	78286	87		S1640-61244-1	78286	91	37
S1640-61153-3	78286	87		S1640-61244-13	78286	87	86
S1640-61153-4	78286	87	40	S1640-61244-17	78286	87	83
S1640-61153-5	78286	87	24	S1640-61244-2	78286	87	
S1640-61153-6	78286	87	64	S1640-61244-3	78286	87	81
S1640-61155	78286	87	3	S1640-61244-4	78286	87	76
S1640-61155	78286	87	37	S1640-61245-1	78286	87	97
S1640-61156	78286	87	1	S1640-61245-1	78286	91	
S1640-61156	78286	87	38	S1640-61246	78286	87	80
S1640-61157-1	78286	87		S1640-61250	78286	87	
S1640-61157-10	78286	87	134	S1640-61250-1	78286	87	167
S1640-61157-14	78286	91	15	S1640-61252	78286	87	
S1640-61157-15	78286	91	13	S1640-61252-1	78286	87	159
S1640-61157-16	78286	91	39	S1640-61254	78286	87	
S1640-61157-28	78286	87		S1640-61254-1	78286	87	121
S1640-61157-3	78286	87	18	S1640-61256	78286	87	
S1640-61157-4	78286	159	5	S1640-61256-1	78286	87	122
S1640-61157-5	78286	159	13	S1640-61260	78286	87	
S1640-61157-6	78286	153	4	S1640-61260-1	78286	87	161
S1640-61157-7	78286	87	153	S1640-61262	78286	87	
S1640-61157-8	78286	87	142	S1640-61263	78286	87	
S1640-61157-9	78286	87	112	S1640-61266-1	78286	87	
S1640-61166-1	78286	87	62	S1640-61266-2	78286	87	
S1640-61166-1	78286	90		S1640-61266-3	78286	87	
S1640-61167-2	78286	90	14	S1640-61266-4	78286	87	
S1640-61168-1	78286	90		S1640-61266-5	78286	87	
S1640-61169	78286	90	26	S1640-61266-6	78286	87	
S1640-61170	78286	90	28	S1640-61266-7	78286	87	98
S1640-61171	78286	90	25	S1640-61266-8	78286	87	128
S1640-61171	78286	90	27	S1640-61270	78286	87	
S1640-61172	78286	90	24	S1640-61270-1	78286	87	151
S1640-61173	78286	90	19	S1640-61272	78286	87	
S1640-61183	78286	90	1	S1640-61272-1	78286	87	148
S1640-61184	78286	90	7	S1640-61274	78286	87	109
S1640-61185	78286	90	4	S1640-61275	78286	87	
S1640-61186	78286	90	5	S1640-61282	78286	87	
S1640-61190	78286	87		S1640-61283-1	78286	87	
S1640-61191	78286	87	52	S1640-61283-2	78286	87	
S1640-61195	78286	90		S1640-61283-3	78286	87	163
S1640-61200-8	78286	91	12	S1640-61285	78286	87	108
S1640-61206	78286	91		S1640-61286	78286	87	120
S1640-61207-1	78286	91	45	S1640-61291	78286	87	
S1640-61207-2	78286	91	46	S1640-61291-1	78286	87	165
S1640-61208	78286	91	23	S1640-61293	78286	87	
S1640-61210	78286	91		S1640-61294	78286	87	
S1640-61210-1	78286	91	25	S1640-61295	78286	87	
S1640-61210-1	78286	93		S1640-61296-1	78286	91	48
S1640-61211	78286	93	43	S1640-61297	78286	91	
S1640-61212	78286	93	2	S1640-61297-1	78286	91	38
S1640-61215	78286	93	41	S1640-61298	78286	91	
S1640-61216-1	78286	93	5	S1640-61298-1	78286	91	43
S1640-61216-2	78286	93	4	S1640-61300	78286	87	

REFERENCE NUMBER	MFG CODE	FIG NUMBER	ITEM NUMBER	REFERENCE NUMBER	MFG CODE	FIG NUMBER	ITEM NUMBER
S1640-61300-3	78286	87	104	S1640-61462	78286	107	25
S1640-61301	78286	87		S1640-61465	78286	107	19
S1640-61301-3	78286	87	118	S1640-61466	78286	107	21
S1640-61303	78286	87		S1640-61468-1	78286	107	
S1640-61303-3	78286	87		S1640-61468-2	78286	107	1
S1640-61303-5	78286	87	169	S1640-61470-1	78286	107	
S1640-61304	78286	93		S1640-61470-2	78286	87	
S1640-61304-3	78286	93	8	S1640-61470-3	78286	107	5
S1640-61305	78286	93		S1640-61470-4	78286	87	46
S1640-61305-3	78286	93	22	S1640-61472	78286	87	140
S1640-61306	78286	93		S1640-61475	78286	107	74
S1640-61306-3	78286	93	19	S1640-61480	78286	107	61
S1640-61307	78286	93		S1640-61483	78286	107	83
S1640-61307-3	78286	93	39	S1640-61486-2	78286	107	82
S1640-61308	78286	93		S1640-61486-2	78286	107	93
S1640-61308-3	78286	93	32	S1640-61488	78286	107	95
S1640-61311-2	78786	87	102	S1640-61489	78286	107	99
S1640-61311-2	78286	87	116	S1640-61490	78286	107	81
S1640-61311-2	78286	87	132	S1640-61490	78286	107	90
S1640-61311-2	78286	87	138	S1640-61491	78286	107	80
S1640-61311-2	78286	87	146	S1640-61491	78286	107	89
S1640-61311-2	78286	87	157	S1640-61519	78286	107	
S1640-61311-2	78286	87	22	S1640-61520	78286	107	43
S1640-61311-2	78286	87	28	S1640-61520	78286	107	67
S1640-61311-2	78286	87	44	S1640-61603	78286	104	40
S1640-61311-2	78286	87	50	S1640-61603	78286	104	8
S1640-61311-2	78286	87	68	S1640-61604	78286	101	40
S1640-61311-2	78286	87	74	S1640-61605	78286	104	21
S1640-61311-2	78286	153	7	S1640-61605	78286	104	53
S1640-61311-3	78286	87		S1640-61607	78286	104	28
S1640-61371	78286	101	37	S1640-61607	78286	104	60
S1640-61400	78286	86	3	S1640-61613	78286	104	31
S1640-61400	78286	107		S1640-61616-1	78286	104	
S1640-61401	78286	107		S1640-61617	78286	104	
S1640-61402	78286	107		S1640-61620-1	78286	101	
S1640-61402-1	78286	107	49	S1640-61620-2	78286	101	
S1640-61403	78286	107	33	S1640-61621	78286	101	113
S1640-61404-3	78286	107	73	S1640-61623-1	78286	104	99
S1640-61405-1	78286	107	71	S1640-61623-2	78286	104	64
S1640-61405-2	78286	107	47	S1640-61628	78286	101	107
S1640-61406	78286	107	85	S1640-61628	78286	101	73
S1640-61407	78286	107	75	S1640-61630	78286	101	10
S1640-61409-1	78286	107	39	S1640-61630	78286	102	
S1640-61409-1	78286	107	64	S1640-61631-1	78286	102	3
S1640-61410	78286	107	55	S1640-61632	78286	102	
S1640-61411	78286	107	54	S1640-61632-1	78286	102	22
S1640-61413-2	78286	107	26	S1640-61633	78286	102	
S1640-61414-1	78286	107	35	S1640-61633-1	78286	102	19
S1640-61415	78286	107	41	S1640-61634	78286	102	6
S1640-61415	78286	107	65	S1640-61637	78286	102	15
S1640-61423	78286	107	51	S1640-61640	78286	102	14
S1640-61424-2	78286	107	103	S1640-61643	78286	104	36
S1640-61427	78286	107		S1640-61646	78286	104	33
S1640-61430-2	78286	107	78	S1640-61646	78286	104	82
S1640-61437-2	78286	107	72	S1640-61648	78286	102	
S1640-61437-2	78286	107	92	S1640-61648-1	78286	102	32
S1640-61437-3	78286	107	48	S1640-61654-1	78286	101	101
S1640-61437-3	78286	107	84	S1640-61654-3	78286	101	99
S1640-61437-4	78286	107	87	S1640-61654-4	78286	101	61
S1640-61438	78286	107		S1640-61655	78286	101	
S1640-61438-1	78286	107	94	S1640-61655-1	78286	101	16
S1640-61448-2	78286	107	88	S1640-61656-1	78286	101	11
S1640-61453	78286	107	104	S1640-61657-1	78286	101	14
S1640-61455	78286	107		S1640-61658	78286	102	5
S1640-61456	78286	107		S1640-61660	78286	102	30
S1640-61457	78286	107	9	S1640-61661-1	78286	101	131
S1640-61458	78286	107	16	S1640-61661-2	78286	101	
S1640-61459-1	78286	107	17	S1640-61662-3	78286	101	
S1640-61460-1	78286	107	14	S1640-61662-4	78286	101	
S1640-61461	78286	107		S1640-61663-3	78286	101	57
S1640-61461-1	78286	107	22	S1640-61663-4	78286	101	58

REFERENCE NUMBER	MFG CODE	FIG NUMBER	ITEM NUMBER	REFERENCE NUMBER	MFG CODE	FIG NUMBER	ITEM NUMBER
S1640-61664-3	78286	101	95	S1640-61809	78286	108	
S1640-61664-4	78286	101	96	S1640-61810	78286	108	7
S1640-61665	78286	101		S1640-61814	78286	108	
S1640-61666	78286	101	63	S1640-61815-1	78286	108	23
S1640-61667-1	78286	101	60	S1640-61815-2	78286	108	24
S1640-61667-1	78286	101	98	S1640-61816	78286	108	52
S1640-61673	78286	101		S1640-61818	78286	108	
S1640-61678-1	78286	101		S1640-61819-1	78286	108	10
S1640-61683-1	78286	101	72	S1640-61819-2	78286	108	9
S1640-61684	78286	101	124	S1640-61821	78286	108	
S1640-61684	78286	101	84	S1640-61822-1	78286	108	30
S1640-61684-1	78286	152	18	S1640-61822-2	78286	108	31
S1640-61685-2	78286	104		S1640-61824	78286	108	12
S1640-61686	78286	87		S1640-61825	78286	108	14
S1640-61687	78286	87	55	S1640-61826	78286	108	16
S1640-61687	78286	87	60	S1640-62000	78286	40	4
S1640-61688	78286	87	59	S1640-62000	78286	86	
S1640-61689	78286	87	57	S1640-62100	78286	86	1
S1640-61694-1	78286	101	118	S1640-62100	78286	87	
S1640-61694-1	78286	101	128	S1640-62104-1	78286	87	
S1640-61694-1	78286	101	78	S1640-62115	78286	87	8
S1640-61694-1	78286	101	88	S1640-62116	78286	87	30
S1640-61694-1	78286	152	15	S1640-62158-2	78286	87	4
S1640-61694-2	78286	101	120	S1640-62600-1	78286	86	2
S1640-61694-2	78286	101	122	S1640-62600-1	78286	101	
S1640-61694-2	78286	101	126	S1640-62601-1	78286	101	52
S1640-61694-2	78286	101	80	S1640-62601-1	78286	104	
S1640-61694-2	78286	101	82	S1640-62602-1	78286	104	
S1640-61694-2	78286	101	86	S1640-62604	78286	104	
S1640-61694-2	78286	152	20	S1640-62605	78286	104	
S1640-61694-2	78286	152	22	S1640-62606	78286	104	68
S1640-61697-2	78286	104		S1640-62606	78286	104	84
S1640-61698-5	78286	104	1	S1640-63000	78286	150	10
S1640-61698-6	78286	104	2	S1640-63000	78286	152	
S1640-61701	78286	105		S1640-63500	78286	152	
S1640-61701-5	78286	105	66	S1640-63501	78286	152	37
S1640-61704	78286	105	37	S1640-63501	78286	153	
S1640-61708-1	78286	105	61	S1640-63506	78286	153	
S1640-61709	78286	105	55	S1640-63506-2	78286	153	9
S1640-61711-3	78286	105	63	S1640-63508-1	78286	153	
S1640-61715	78286	105	12	S1640-63508-5	78286	152	25
S1640-61717	78286	105		S1640-63508-6	78286	153	
S1640-61717-1	78286	105	9	S1640-63509	78286	153	27
S1640-61718	78286	106	117	S1640-63510-5	78286	153	13
S1640-61719	78286	105	6	S1640-63512-3	78286	153	26
S1640-61721-1	78286	101		S1640-63513-1	78286	153	17
S1640-61723-1	78286	101		S1640-63514-1	78286	153	18
S1640-61725	78286	101	76	S1640-63514-2	78286	153	20
S1640-61726	78286	41	15	S1640-63520	78286	152	
S1640-61727-3	78286	101	46	S1640-63521-1	78286	152	28
S1640-61728	78286	101	31	S1640-63522	78286	152	31
S1640-61730	78286	101	19	S1640-63523	78286	152	30
S1640-61731	78286	101	49	S1640-63524	78286	152	33A
S1640-61732	78286	101	39	S1640-63525	78286	152	36
S1640-61733-2	78286	101	24	S1640-63527	78286	152	32
S1640-61734	78286	104	63	S1640-63528	78286	152	33
S1640-61735	78286	104	98	S1640-64000	78286	154	2
S1640-61742-1	78286	104	71	S1640-64000	78286	159	
S1640-61742-1	78286	104	87	S1640-64001	78286	159	
S1640-61742-11	78286	104	75	S1640-64001-1	78286	159	25
S1640-61742-11	78286	104	91	S1640-64001-1	78286	159	30
S1640-61742-12	78286	104	15	S1640-64001-2	78286	159	24
S1640-61742-12	78286	104	47	S1640-64001-2	78286	159	29
S1640-61742-2	78286	104	12	S1640-64002-1	78286	159	17
S1640-61742-2	78286	104	44	S1640-64003	78286	159	
S1640-61750	78286	105	50	S1640-64004	78286	159	
S1640-61772-1	78286	101	20	S1640-64004-1	78286	159	10
S1640-61772-2	78286	101	22	S1640-64005	78286	159	
S1640-61773	78286	101	44	S1640-64005-1	78286	159	35
S1640-61802	78286	108		S1640-64007-1	78286	159	
S1640-61806-1	78286	108	40	S1640-64007-2	78286	159	31

REFERENCE NUMBER	MFG CODE	FIG NUMBER	ITEM NUMBER	REFERENCE NUMBER	MFG CODE	FIG NUMBER	ITEM NUMBER
S1640-64009-1	78286	159	1	S1645-61501-2	78286	110	
S1640-64009-10	78286	101	1	S1645-61501-2	78286	111	
S1640-64009-11	78286	101	4	S1645-61501-5	78286	110	
S1640-64009-3	78286	153		S1645-61501-5	78286	111	34
S1640-64009-4	78286	101		S1645-61703-1	78286	139	
S1640-64009-5	78286	101		S1645-61704-2	78286	139	
S1640-64009-6	78286	101		S1645-61817-10	78286	139	
S1640-64009-7	78286	87		S1645-61817-11	78286	139	
S1640-64009-9	78286	101	7	S1645-65012	78286	112	
S1640-64017-1	78286	159		S1645-65012	78286	114	
S1640-64017-2	78286	159		S1645-65013	78286	114	
S1640-64017-7	78286	159	20	S1645-65020	78286	109	34
S1640-64017-8	78286	159	26	S1645-65020	78286	112	
S1640-64018	78286	159	38	S1645-65024	78286	109	
S1645-61020-6	78286	40	3	S1645-65034	78286	112	21
S1645-61020-6	78286	109		S1645-65034	78286	112	24
S1645-61100-10	78286	110	75	S1645-65039	78286	112	19
S1645-61100-10	78286	111	85	S1645-65039	78286	112	26
S1645-61100-11	78286	110	67	S1645-65040-1	78286	112	
S1645-61100-11	78286	111	77	S1645-65042	78286	112	39
S1645-61100-12	78286	110	63	S1645-65044	78286	112	33
S1645-61100-12	78286	111	73	S1645-65045-1	78286	112	35
S1645-61100-13	78286	110	9	S1645-65045-2	78286	112	38
S1645-61100-13	78286	111	9	S1645-65045-3	78286	112	23
S1645-61100-14	78286	110	5	S1645-65045-4	78286	112	27
S1645-61100-14	78286	111	5	S1645-65046	78286	112	36
S1645-61100-15	78286	110	1	S1645-65047	78286	112	
S1645-61100-15	78286	111	1	S1645-65053	78286	112	50
S1645-61100-20	78286	110	14	S1645-65056	78286	112	47
S1645-61100-20	78286	111	17	S1645-65056-1	78286	112	57
S1645-61100-22	78286	110	71	S1645-65061-1	78286	110	56
S1645-61100-22	78286	111	81	S1645-65061-2	78286	110	59
S1645-61100-27	78286	110	29	S1645-65070-7	78286	112	31
S1645-61100-4	78286	110	22	S1645-65070-7	78286	112	40
S1645-61100-4	78286	111	30	S1645-65070-7	78286	112	51
S1645-61100-44	78286	110	17	S1645-65072-1	78286	112	60
S1645-61100-5	78286	110	18	S1645-65104-1	78286	114	
S1645-61100-5	78286	111	26	S1645-65130	78286	109	
S1645-61102	78286	109		S1645-65131-1	78286	112	5
S1645-61102	78286	111		S1645-65131-2	78286	112	
S1645-61102-1	78286	111		S1645-65133	78286	112	28
S1645-61102-2	78286	111	38	S1645-65133-2	78286	112	30
S1645-61125	78286	50		S1645-65133-3	78286	112	29
S1645-61191	78286	50		S1645-65134	78286	112	
S1645-61192	78286	50		S1645-65134	78286	112	8
S1645-61200-1	78286	111	68	S1645-65135-1	78286	113	13
S1645-61200-11	78286	110	51	S1645-65140	78286	109	
S1645-61200-11	78286	111	63	S1645-65151	78286	109	17
S1645-61200-2	78286	111		S1645-65152	78286	109	21
S1645-61200-3	78286	110	46	S1645-65152-2	78286	109	22
S1645-61200-3	78286	111	58	S1645-65152-3	78286	109	24
S1645-61200-5	78286	110	42	S1645-65155	78286	109	
S1645-61200-5	78286	111	54	S1645-65156	78286	109	
S1645-61500	78286	109	33	S1645-65157	78286	109	
S1645-61500	78286	110		S1645-65157-1	78286	109	27
S1645-61500-1	78286	110	26	S1645-65158	78286	109	
S1645-61500-1	78286	111	42	S1645-65204	78286	114	49
S1645-61500-10	78286	110	41	S1645-65213	78286	113	38
S1645-61500-10	78286	111	53	S1645-65213	78286	114	60
S1645-61500-2	78286	110	30	S1645-65218	78286	113	40
S1645-61500-2	78286	110	34	S1645-65218	78286	114	62
S1645-61500-2	78286	111	46	S1645-65227	78286	113	34
S1645-61500-3	78286	110	38	S1645-65227	78286	114	54
S1645-61500-3	78286	111	50	S1645-65227-2	78286	114	56
S1645-61500-9	78286	110	33	S1645-65400	78286	112	61
S1645-61500-9	78286	110	37	S1645-65400	78286	113	
S1645-61500-9	78286	111	49	S1645-65403	78286	113	
S1645-61501-1	78286	110		S1645-65403	78286	114	
S1645-61501-1	78286	111		S1645-65405	78286	112	37
S1645-61501-12	78286	110		S1645-65405	78286	112	49
S1645-61501-12	78286	111		S1645-65406	78286	109	

REFERENCE NUMBER	MFG CODE	FIG NUMBER	ITEM NUMBER	REFERENCE NUMBER	MFG CODE	FIG NUMBER	ITEM NUMBER
S1645-65407	78286	112	22	S1650-61203-3	78286	120	
S1645-65410	78286	113	31	S1650-61224	78286	120	2
S1645-65412	78286	113		S1650-61224	78286	120	46
S1645-65460-2	78286	112	4	S1650-61224-1	78286	120	51
S1645-65460-3	78286	112	1	S1650-61224-1	78286	120	7
S1645-65500	78286	112		S1650-61230	78286	120	11
S1645-65500	78286	114		S1650-61230	78286	120	60
S1645-65500-1	78286	112		S1650-61230	78286	120	66
S1645-65500-1	78286	114		S1650-61236-1	78286	120	33
S1645-65500-2	78286	112		S1650-61236-1	78286	120	78
S1645-65500-2	78286	114		S1650-61250	78286	115	
S1645-65510-2	78286	114		S1650-61250	78286	120	
S1645-65512	78286	114	51	S1650-61251-1	78286	120	25
S1645-80000	78286	167	11	S1650-61251-1	78286	120	70
S1650-61003	78286	40	11	S1650-61251-2	78286	120	15
S1650-61003	78286	115		S1650-61252	78286	120	
S1650-61020-2	78286	122		S1650-61252	78286	120	38
S1650-61020-26	78286	122		S1650-61252	78286	120	40
S1650-61100-2	78286	115	43	S1650-61252	78286	120	42
S1650-61100-2	78286	116		S1650-61252	78286	120	44
S1650-61101-3	78286	116	9	S1650-61252	78286	120	85
S1650-61101-4	78286	116		S1650-61252	78286	120	87
S1650-61103-2	78286	52	31	S1650-61287	78286	120	
S1650-61104	78286	51		S1650-61300-1	78286	115	61
S1650-61105	78286	52	35	S1650-61300-1	78286	117	
S1650-61108	78286	52	17	S1650-61301	78286	117	30
S1650-61109	78286	52	21	S1650-61301	78286	117	65
S1650-61110	78286	116	10	S1650-61301	78286	117	91
S1650-61113	78286	116	17	S1650-61301	78286	118	14
S1650-61115	78286	116	16	S1650-61302	78286	117	51
S1650-61117	78286	116	18	S1650-61303-1	78286	117	112
S1650-61118	78286	116	8	S1650-61303-1	78286	117	60
S1650-611192	78286	116		S1650-61303-1	78286	118	80
S1650-61131	78286	116	32	S1650-61303-1	78286	118	9
S1650-61132	78286	116	33	S1650-61303-2	78286	118	123
S1650-61132	78286	119	39	S1650-61303-2	78286	118	23
S1650-61134	78286	116	30	S1650-61304	78286	117	103
S1650-61136-10	78286	116	27	S1650-61304	78286	117	23
S1650-61136-4	78286	116	21	S1650-61304	78286	117	47
S1650-61136-5	78286	116		S1650-61304	78286	117	78
S1650-61136-6	78286	116	20	S1650-61304	78286	117	84
S1650-61136-7	78286	116		S1650-61305	78286	117	101
S1650-61136-8	78286	116	23	S1650-61305	78286	117	19
S1650-61136-9	78286	116	25	S1650-61305	78286	117	45
S1650-61137	78286	116	29	S1650-61305	78286	117	80
S1650-61138	78286	116	12	S1650-61305	78286	118	125
S1650-61140	78286	116	4	S1650-61305	78286	118	18
S1650-61143	78286	116		S1650-61305	78286	118	7
S1650-61144-1	78286	116	35	S1650-61305	78286	118	78
S1650-61144-2	78286	116		S1650-61306	78286	117	21
S1650-61145-1	78286	116	36	S1650-61306	78286	117	82
S1650-61145-2	78286	116		S1650-61307	78286	117	58
S1650-61146-1	78286	116	34	S1650-61307	78286	118	2
S1650-61146-2	78286	116		S1650-61309	78286	117	53
S1650-61152-1	78286	116		S1650-61309	78286	118	6
S1650-61152-10	78286	116		S1650-61310	78286	117	25
S1650-61152-11	78286	116	39	S1650-61311	78286	117	31
S1650-61152-12	78286	116	46	S1650-61311-3	78286	87	
S1650-61152-4	78286	116	45	S1650-61312	78286	117	6
S1650-61158-1	78286	116	2	S1650-61314-1	78286	117	
S1650-61159	78286	115		S1650-61314-1	78286	117	96
S1650-61159-1	78286	115		S1650-61314-1	78286	118	
S1650-61159-2	78286	115		S1650-61315	78286	117	86
S1650-61168	78286	116	15	S1650-61316	78286	117	66
S1650-61170	78286	115	41	S1650-61317-1	78286	117	11
S1650-61187	78286	115		S1650-61317-1	78286	118	50
S1650-61187-2	78286	115	8	S1650-61319-1	78286	117	17
S1650-61201-4	78286	120	21	S1650-61319-1	78286	117	41
S1650-61201-5	78286	120		S1650-61319-1	78286	118	59
S1650-61203-1	78286	120	88	S1650-61319-1	78286	118	69
S1650-61203-1	78286	120	90	S1650-61319-2	78286	117	76

REFERENCE NUMBER	MFG CODE	FIG NUMBER	ITEM NUMBER	REFERENCE NUMBER	MFG CODE	FIG NUMBER	ITEM NUMBER
S1650-61319-2	78286	118	159	S1650-61376-2	78286	118	
S1650-61320-1	78286	117	15	S1650-61377-16	78286	118	102A
S1650-61320-1	78286	118	67	S1650-61377-16	78286	119	45
S1650-61320-2	78286	117	74	S1650-61377-17	78286	118	102
S1650-61320-2	78286	118	157	S1650-61379-1	78286	118	46
S1650-61320-3	78286	117	39	S1650-61379-2	78286	118	146
S1650-61320-3	78286	118	57	S1650-61379-21	78286	118	48
S1650-61320-4	78286	117	16	S1650-61379-3	78286	118	95
S1650-61320-4	78286	117	40	S1650-61379-5	78286	118	147
S1650-61320-4	78286	117	75	S1650-61379-6	78286	118	96
S1650-61320-4	78286	118	158	S1650-61379-7	78286	118	148
S1650-61320-4	78286	118	58	S1650-61379-7	78286	118	47
S1650-61320-4	78286	118	68	S1650-61379-8	78286	118	149
S1650-61321	78286	117		S1650-61379-9	78286	118	97
S1650-61321	78286	118		S1650-61380	78286	118	28
S1650-61321	78286	118	136	S1650-61382-11	78286	118	38
S1650-61321	78286	118	53	S1650-61382-2	78286	118	138
S1650-61325	78286	117	49	S1650-61383-11	78286	118	15
S1650-61325	78286	118	133	S1650-61383-12	78286	118	128
S1650-61325	78286	118	33	S1650-61383-2	78286	118	
S1650-61325	78286	118	87	S1650-61384-1	78286	118	107
S1650-61326	78286	117	43	S1650-61384-2	78286	118	115
S1650-61327	78286	117	99	S1650-61385	78286	118	24
S1650-61327	78286	118	82	S1650-61386	78286	118	127
S1650-61328	78286	117	3	S1650-61387-3	78286	117	
S1650-61328	78286	118	142	S1650-61387-3	78286	118	51
S1650-61328	78286	118	42	S1650-61387-3	78286	118	61
S1650-61328	78286	118	91	S1650-61387-4	78286	118	
S1650-61328	78286	119		S1650-61388	78286	118	65
S1650-61330	78286	49	64	S1650-61388-1	78286	118	55
S1650-61332	78286	117	29	S1650-61388-1	78286	118	155
S1650-61332	78286	117	64	S1650-61389-1	78286	118	161
S1650-61332	78286	117	90	S1650-61390-1	78286	118	
S1650-61332	78286	118	122	S1650-61390-1	78286	118	40
S1650-61332	78286	118	13	S1650-61390-2	78286	118	89
S1650-61332	78286	118	22	S1650-61390-3	78286	118	140
S1650-61333	78286	117	27	S1650-61398-1	78286	118	45
S1650-61333	78286	117	88	S1650-61398-2	78286	118	145
S1650-61333	78286	118	120	S1650-61398-3	78286	118	94
S1650-61333	78286	118	20	S1650-61443	78286	115	40
S1650-61334	78286	117	62	S1650-61474	78286	115	39
S1650-61334	78286	118	11	S1650-61700-5	78286	115	98
S1650-61336-1	78286	118	49	S1650-61700-5	78286	125	
S1650-61336-3	78286	118	98	S1650-61701	78286	125	
S1650-61336-5	78286	118	150	S1650-61702	78286	125	3
S1650-61337	78286	117	108	S1650-61715	78286	125	16
S1650-61337	78286	118	74	S1650-61716	78286	125	8
S1650-61360	78286	115		S1650-61717-2	78286	125	5
S1650-61360	78286	118		S1650-61718-2	78286	125	12
S1650-61361	78286	118	99	S1650-61721	78286	125	
S1650-61361	78286	119		S1650-61721-1	78286	125	4
S1650-61362-1	78286	119	40	S1650-61806-11	78286	150	64
S1650-61362-23	78286	119		S1650-61806-12	78286	150	61
S1650-61362/1	78286	119	44	S1650-61811	78286	123	111
S1650-61363	78286	119	14	S1650-61815-3	78286	123	101
S1650-61364	78286	119	33	S1650-61823-4	78286	123	
S1650-61365-3	78286	119	21	S1650-61825-10	78286	123	
S1650-61366	78286	119	26	S1650-61825-32	78286	123	
S1650-61367	78286	119	5	S1650-61825-33	78286	123	
S1650-61368-1	78286	119	9	S1650-61825-34	78286	123	44
S1650-61368-2	78286	119	11	S1650-61825-35	78286	123	45
S1650-61369	78286	119	4	S1650-61825-36	78286	123	41
S1650-61370	78286	119	6	S1650-61825-37	78286	123	42
S1650-61371-1	78286	119	38	S1650-61825-38	78286	123	47
S1650-61371-2	78286	119	36	S1650-61825-39	78286	123	48
S1650-61372	78286	119	43	S1650-61825-5	78286	123	
S1650-61373	78286	119	1	S1650-61825-6	78286	123	
S1650-61374	78286	119	22	S1650-61825-7	78286	123	
S1650-61374	78286	119	29	S1650-61825-8	78286	123	
S1650-61375	78286	118		S1650-61825-9	78286	123	
S1650-61376-1	78286	118		S1650-61826	78286	123	20

REFERENCE NUMBER	MFG CODE	FIG NUMBER	ITEM NUMBER	REFERENCE NUMBER	MFG CODE	FIG NUMBER	ITEM NUMBER
S1650-61831	78286	123	79	S1650-62003-9	78286	126	21
S1650-61834-8	78286	124	6	S1650-62004-11	78286	126	
S1650-61836	78286	123	50	S1650-62004-13	78286	126	
S1650-61836	78286	124		S1650-62004-14	78286	126	
S1650-61840-1	78286	124	1	S1650-62006-11	78286	126	
S1650-61840-10	78286	124	34	S1650-62006-12	78286	126	1
S1650-61840-11	78286	124	45	S1650-62006-14	78286	126	2
S1650-61840-12	78286	124	48	S1650-62010-1	78286	115	99
S1650-61840-13	78286	124	51	S1650-62010-1	78286	126	
S1650-61840-14	78286	124	54	S1650-62011-2	78286	126	13
S1650-61840-15	78286	124	35	S1650-62011-2	78286	126	26
S1650-61840-16	78286	124	38	S1650-62011-3	78286	126	12
S1650-61840-17	78286	124	65	S1650-62011-3	78286	126	25
S1650-61840-18	78286	124	68	S1650-62011-4	78286	126	15
S1650-61840-19	78286	124	60	S1650-62011-4	78286	126	28
S1650-61840-2	78286	124	4	S1650-62012-2	78286	126	
S1650-61840-20	78286	124	63	S1650-62103	78286	115	
S1650-61840-21	78286	124	72	S1650-62103-1	78286	115	23
S1650-61840-22	78286	124	75	S1650-62103-3	78286	115	28
S1650-61840-27	78286	124	23	S1650-62103-4	78286	115	30
S1650-61840-28	78286	124	26	S1650-62103-5	78286	115	31
S1650-61840-29	78286	124	27	S1650-62103-6	78286	115	25
S1650-61840-3	78286	124	8	S1650-62103-7	78286	115	21
S1650-61840-30	78286	124	30	S1650-62104	78286	115	
S1650-61840-4	78286	124	11	S1650-62105	78286	115	
S1650-61840-5	78286	124	18	S1650-62126-1	78286	115	7
S1650-61840-6	78286	124	21	S1650-62126-2	78286	115	
S1650-61840-9	78286	124	31	S1650-62126-3	78286	115	12
S1650-61845	78286	123	88	S1650-62126-4	78286	115	16
S1650-61850-2	78286	115	69	S1650-62135	78286	115	
S1650-61850-2	78286	123		S1650-62135-8	78286	115	56
S1650-61851	78286	123		S1650-62136-10	78286	127	7
S1650-61851-15	78286	123	51	S1650-62136-11	78286	127	13
S1650-61851-16	78286	123	54	S1650-62136-12	78286	127	11
S1650-61853	78286	123	58	S1650-62136-13	78286	127	15
S1650-61856	78286	123	80	S1650-62136-14	78286	127	17
S1650-61857-1	78286	123	68	S1650-62136-15	78286	127	19
S1650-61858	78286	123	84	S1650-62136-25	78286	80	21
S1650-61860-2	78286	123	56	S1650-62136-6	78286	127	1
S1650-61863-3	78286	123	32	S1650-62136-7	78286	127	3
S1650-61863-4	78286	123		S1650-62136-8	78286	127	5
S1650-61870-4	78286	123		S1650-62136-9	78286	127	9
S1650-61871-3	78286	123	1	S1650-62141-1	78286	115	
S1650-61872-3	78286	123		S1650-62141-2	78286	115	
S1650-61873-2	78286	41	107	S1650-62144-1	78286	115	50
S1650-61873-2	78286	50	248B	S1650-62144-5	78286	115	
S1650-61873-2	78286	123	8	S1650-62144-9	78286	115	
S1650-61876-3	78286	123		S1650-62145	78286	115	54
S1650-61876-4	78286	123		S1650-62146	78286	115	
S1650-61878	78286	123		S1650-62146-2	78286	115	100
S1650-61878-1	78286	123		S1650-62148-2	78286	115	44
S1650-61879-1	78286	123		S1650-62149	78286	115	49
S1650-61881	78286	123	3	S1650-62151-26	78286	122	
S1650-61894-23	78286	123	19	S1650-62151-27	78286	122	
S1650-61894-24	78286	123		S1650-62151-5	78286	122	17
S1650-61948	78286	123	11	S1650-62151-5	78286	122	21
S1650-62001-6	78286	126		S1650-62151-6	78286	122	
S1650-62002-2	78286	126	35	S1650-62153	78286	122	
S1650-62002-45	78286	126		S1650-62154-1	78286	122	
S1650-62002-46	78286	126	30	S1650-62154-10	78286	122	9
S1650-62002-5	78286	126	34	S1650-62154-2	78286	122	
S1650-62003-1	78286	126	9	S1650-62154-8	78286	122	10
S1650-62003-10	78286	126		S1650-62154-9	78286	122	12
S1650-62003-19	78286	126		S1650-62155-2	78286	122	37
S1650-62003-20	78286	126	22	S1650-62155-3	78286	122	
S1650-62003-21	78286	126	29	S1650-62155-8	78286	122	
S1650-62003-3	78286	126	16	S1650-62156-10	78286	122	34
S1650-62003-4	78286	126	17	S1650-62156-2	78286	122	
S1650-62003-5	78286	126	18	S1650-62156-6	78286	122	
S1650-62003-6	78286	126	19	S1650-62156-7	78286	122	
S1650-62003-7	78286	126	20	S1650-62156-8	78286	122	40

REFERENCE NUMBER	MFG CODE	FIG NUMBER	ITEM NUMBER	REFERENCE NUMBER	MFG CODE	FIG NUMBER	ITEM NUMBER
S1650-62156-9	78286	122		S1650-66015	78286	123	
S1650-62157	78286	122		S1650-66015-1	78286	123	33
S1650-62157-1	78286	122	48	S1650-66015-3	78286	123	35
S1650-62157-2	78286	122	50	S1650-66045-11	78286	123	15
S1650-62158	78286	122	31	S1650-66046-1	78286	123	
S1650-62162	78286	122		S1650-66046-2	78286	123	
S1650-62162-1	78286	122	15	S1650-66047	78286	123	9
S1650-62163	78286	122		S1650-66073	78286	123	60
S1650-62163-2	78286	122	64	S1650-66091-1	78286	123	
S1650-62163-2	78286	122	66	S1650-66091-2	78286	123	
S1650-62164	78286	122		S1655-10032-1	78286	11	
S1650-62164-1	78286	122	45	S1655-61005	78286	40	6
S1650-62164-2	78286	122	43	S1655-61005	78286	128	
S1650-62165	78286	122		S1655-61103	78286	131	
S1650-62165-1	78286	122	41	S1655-61103	78286	132	
S1650-62166	78286	122	30	S1655-61104	78286	131	43
S1650-62170-10	78286	115		S1655-61104	78286	132	68
S1650-62170-6	78286	115	72	S1655-61105-1	78286	131	54
S1650-62174	78286	115		S1655-61105-1	78286	132	78
S1650-62175	78286	115		S1655-61105-2	78286	131	50
S1650-62175	78286	121		S1655-61105-2	78286	132	74
S1650-62175-1	78286	121		S1655-61105-3	78286	131	56
S1650-62176-1	78286	121	5	S1655-61105-3	78286	132	80
S1650-62176-2	78286	121		S1655-61105-4	78286	131	53
S1650-62177-6	78286	121	8	S1655-61112	78286	131	
S1650-62178-10	78286	121	7	S1655-61112	78286	132	
S1650-62179-1	78286	121	9	S1655-61114-1	78286	131	25
S1650-62183	78286	115		S1655-61114-1	78286	132	28
S1650-62183-1	78286	115	94	S1655-61114-1	78286	133	
S1650-62183-2	78286	115	95	S1655-61115-1	78286	133	1
S1650-62183-3	78286	115	96	S1655-61116	78286	133	18
S1650-62183-4	78286	115	97	S1655-61118	78286	133	22
S1650-62185	78286	122		S1655-61119-1	78286	133	13
S1650-62185-1	78286	122	58	S1655-61119-2	78286	133	17
S1650-62185-2	78286	122	61	S1655-61128	78286	131	93
S1650-62185-3	78286	122	62	S1655-61128	78286	132	81
S1650-62185-4	78286	122	52	S1655-61128	78286	134	
S1650-62185-5	78286	122	55	S1655-61129	78286	129	13
S1650-62185-6	78286	122	56	S1655-61129	78286	134	9
S1650-62187-1	78286	120		S1655-61130	78286	131	
S1650-62193	78286	122		S1655-61131	78286	131	6
S1650-62195	78286	115	62	S1655-61132	78286	131	24
S1650-62195	78286	122		S1655-61133	78286	131	10
S1650-62196	78286	122		S1655-61138-1	78286	131	66
S1650-62197-2	78286	120		S1655-61138-2	78286	131	72
S1650-62211	78286	115		S1655-61138-3	78286	131	71
S1650-62211-1	78286	115	87	S1655-61138-4	78286	131	80
S1650-62300	78286	115		S1655-61138-5	78286	131	86
S1650-62301	78286	115		S1655-61138-6	78286	131	85
S1650-62301-1	78286	115	66	S1655-61138-6	78286	132	135
S1650-62301-1	78286	120	55	S1655-61138-7	78286	131	84
S1650-62302	78286	115	67	S1655-61139-1	78286	131	73
S1650-62302	78286	120	56	S1655-61139-2	78286	131	79
S1650-62303	78286	115	64	S1655-61139-3	78286	131	78
S1650-62303	78286	120	53	S1655-61143	78286	133	14
S1650-62303	78286	120	58	S1655-61144	78286	132	
S1650-62303	78286	120	64	S1655-61144-2	78286	132	46
S1650-62303	78286	120	9	S1655-61145-1	78286	132	45
S1650-62304	78286	43	63	S1655-61145-2	78286	132	43
S1650-62343-9	78286	115	84	S1655-61146	78286	131	57
S1650-62343-9	78286	127		S1655-61148	78286	131	
S1650-62355	78286	115		S1655-61148-2	78286	132	
S1650-62356	78286	115		S1655-61149	78286	131	37
S1650-62361	78286	115		S1655-61149-3	78286	131	42
S1650-62361-10	78286	115	57	S1655-61149-3	78286	132	58
S1650-62361-2	78286	115	59	S1655-61149-4	78286	132	52
S1650-62361-3	78286	115	60	S1655-61151	78286	128	
S1650-63049-1	78286	126	5	S1655-61156	78286	128	
S1650-63065-1	78286	126	8	S1655-61162-3	78286	128	23
S1650-66008	78286	41		S1655-61163	78286	136	15
S1650-66008	78286	123		S1655-61163	78286	136	47

REFERENCE NUMBER	MFG CODE	FIG NUMBER	ITEM NUMBER	REFERENCE NUMBER	MFG CODE	FIG NUMBER	ITEM NUMBER
S1655-61164	78286	131		S1655-61600	78286	128	26
S1655-61164	78286	132		S1655-61600	78286	138	
S1655-61165	78286	131	4	S1655-61604-1	78286	138	46
S1655-61165	78286	132	30	S1655-61604-1	78286	140	
S1655-61168	78286	131		S1655-61605	78286	140	15
S1655-61168	78286	132		S1655-61605	78286	141	27
S1655-61169-2	78286	131	31	S1655-61606	78286	140	8
S1655-61169-2	78286	132	17	S1655-61607-1	78286	140	21
S1655-61183-1	78286	128	20	S1655-61607-2	78286	140	25
S1655-61184	78286	128	6	S1655-61607-5	78286	140	26
S1655-61185	78286	128	7	S1655-61608-3	78286	140	1
S1655-61186	78286	128	8	S1655-61608-4	78286	140	6
S1655-61187	78286	128	18	S1655-61608-7	78286	141	
S1655-61190	78286	128		S1655-61608-8	78286	140	
S1655-61192	78286	128	10	S1655-61608-8	78286	141	1
S1655-61192-2	78286	128	16	S1655-61609	78286	138	
S1655-61203	78286	138	35	S1655-61609-1	78286	138	58
S1655-61207	78286	140		S1655-61610	78286	138	
S1655-61207	78286	141	12	S1655-61611	78286	138	14
S1655-61207-1	78286	140	12	S1655-61612	78286	138	13
S1655-61207-1	78286	141	16	S1655-61613	78286	138	30
S1655-61207-2	78286	140	10	S1655-61613-3	78286	138	33
S1655-61207-2	78286	141	14	S1655-61613-4	78286	138	32
S1655-61209-1	78286	140	41	S1655-61613-4	78286	138	34
S1655-61209-1	78286	141	22	S1655-61613-5	78286	138	31
S1655-61217-3	78286	138	29	S1655-61614-1	78286	138	17
S1655-61221	78286	138	42	S1655-61614-2	78286	138	20
S1655-61221	78286	139	34	S1655-61614-3	78286	138	12
S1655-61228-1	78286	140		S1655-61615	78286	140	27
S1655-61228-4	78286	140	45	S1655-61615-2	78286	140	30
S1655-61232	78286	138		S1655-61616	78286	138	
S1655-61232	78286	139		S1655-61618	78286	138	
S1655-61334	78286	131	15	S1655-61619	78286	138	
S1655-61334	78286	132	23	S1655-61622	78286	138	
S1655-61335	78286	131		S1655-61625	78286	138	
S1655-61335	78286	132		S1655-61625-1	78286	139	
S1655-61336	78286	131	12	S1655-61626-1	78286	138	
S1655-61336	78286	132	18	S1655-61626-1	78286	139	8
S1655-61336-1	78286	131		S1655-61626-2	78286	138	7
S1655-61336-1	78286	131	11	S1655-61626-2	78286	139	10
S1655-61336-1	78286	132	27	S1655-61626-4	78286	139	22
S1655-61336-2	78286	131	20	S1655-61626-5	78286	139	
S1655-61336-2	78286	132	26	S1655-61630	78286	138	
S1655-61338-1	78286	130	44	S1655-61632	78286	138	
S1655-61400-1	78286	128	2	S1655-61632	78286	139	36
S1655-61400-1	78286	131		S1655-61633	78286	138	54
S1655-61412	78286	135		S1655-61633	78286	139	37
S1655-61413	78286	135	5	S1655-61634-1	78286	138	56
S1655-61413-4	78286	135		S1655-61634-1	78286	139	40
S1655-61413-5	78286	135	19	S1655-61634-2	78286	138	57
S1655-61413-6	78286	135		S1655-61634-2	78286	139	41
S1655-61413-7	78286	135	20	S1655-61635	78206	138	
S1655-61413-8	78286	135		S1655-61635	78286	138	
S1655-61414	78286	131		S1655-61651-1	78286	122	
S1655-61414	78286	132		S1655-61660-1	78286	128	25
S1655-61414-1	78286	131	33	S1655-61660-1	78286	137	
S1655-61414-1	78286	132	47	S1655-61661-1	78286	131	88
S1655-61416	78286	129	2	S1655-61661-13	78286	137	
S1655-61416-1	78286	129	3	S1655-61661-14	78286	137	9A
S1655-61420	78286	128	4	S1655-61661-19	78286	137	
S1655-61420	78286	136		S1655-61661-2	78286	137	
S1655-61421-1	78286	136	42	S1655-61661-20	78286	137	
S1655-61421-3	78286	136	20	S1655-61661-21	78286	137	
S1655-61421-3	78286	136	37	S1655-61661-22	78286	137	
S1655-61421-3	78286	136	40	S1655-61661-23	78286	137	
S1655-61421-4	78286	136	39	S1655-61661-3	78286	137	
S1655-61432	78286	131		S1655-61661-5	78286	137	
S1655-61432	78286	132		S1655-61661-6	78286	137	
S1655-61434	78286	131		S1655-61661-7	78286	137	
S1655-61434	78286	132		S1655-61661-9	78286	137	
S1655-61533-94	78286	147	12	S1655-61663	78286	131	89

REFERENCE NUMBER	MFG CODE	FIG NUMBER	ITEM NUMBER	REFERENCE NUMBER	MFG CODE	FIG NUMBER	ITEM NUMBER
S1655-61663	78286	132	9	S1655-65117	78286	130	8
S1655-61665	78286	138		S1655-65118	78286	129	
S1655-61668-1	78286	131		S1655-65120	78286	129	
S1655-61668-1	78286	132	36	S1655-65123	78286	129	6
S1655-61668-10	78286	137	35	S1655-65123-1	78286	129	9
S1655-61668-11	78286	137	24	S1655-65124	78286	109	4
S1655-61668-12	78286	137		S1655-65131	78286	130	89
S1655-61668-13	78286	137	9	S1655-65140	78286	129	
S1655-61668-14	78286	137	10	S1655-65141	78286	129	16
S1655-61668-2	78286	135	3	S1655-65141	78286	130	
S1655-61668-3	78286	137	11	S1655-65142	78286	130	13
S1655-61668-4	78286	135	2	S1655-65142-1	78286	130	
S1655-61668-5	78286	137	18	S1655-65142-2	78286	130	
S1655-61668-6	78286	137	15	S1655-65142-3	78286	130	
S1655-61668-7	78286	137	28	S1655-65143	78286	130	
S1655-61668-8	78286	137	4	S1655-65144-1	78286	130	76
S1655-61668-9	78286	137	34	S1655-65144-5	78286	130	
S1655-61707	78286	132		S1655-65144-6	78286	130	
S1655-61711-1	78286	141	11	S1655-65144-7	78286	130	75
S1655-61713	78286	132		S1655-65145	78286	130	78
S1655-61724	78286	132	97	S1655-65145-2	78286	130	80
S1655-61724-1	78286	132	106	S1655-65145-3	78286	130	
S1655-61808	78286	11	45	S1655-65145-5	78286	130	
S1655-61814-1	78286	138		S1655-65146	78286	130	82
S1655-61814-4	78286	129	22	S1655-65146-2	78286	130	85
S1655-61850-1	78286	129		S1655-65146-3	78286	130	
S1655-61852	78286	129	19	S1655-65147-3	78286	130	
S1655-61853-6	78286	129	30	S1655-65148-1	78286	130	
S1655-61853-7	78286	129	31	S1655-65148-2	78286	130	
S1655-61900	78286	128		S1655-65148-3	78286	130	
S1655-61901	78286	128		S1655-65148-4	78286	130	
S1655-61901	78286	139		S1655-66112	78286	141	17
S1655-61903	78286	128	3	S1655-66112-1	78286	141	25
S1655-61903	78286	135		S1655-66112-2	78286	141	18
S1655-61906	78286	139		S1655-66112-3	78286	141	20
S1655-61908-1	78286	132	95	S1655-66113-1	78286	141	
S1655-61908-2	78286	132	96	S1655-66117-5	78286	132	33
S1655-61909-1	78286	140	5	S1655-66160	78286	129	
S1655-61909-1	78286	141	2	S1655-80000-2	78286	167	20
S1655-61909-2	78286	141	3	S1655-80000-2	78286	180	
S1655-61910	78286	132	154	S1655-80182	78286	180	2
S1655-61910	78286	141		S1655-80183	78286	180	9
S1655-61912	78286	141	5	S1655-80190	78286	180	
S1655-61912-1	78286	141	7	S1655-80191	78286	180	5
S1655-61912-2	78286	141	9	S1656-61313	78286	117	
S1655-61914	78286	130	68	S166FIG1-4 1-16	70255	44A	7
S1655-61917-1	78286	132		S1660-61003-1	78286	40	12
S1655-61918	78286	132	138	S1660-61031	78286	50	
S1655-61918-1	78286	132		S1660-61700-7	78286	40	
S1655-61922	78286	139		S1660-64001	78286	154	236
S1655-61924	78286	132		S1660-64002	78286	154	
S1655-61924-3	78286	132	38	S1660-64003-1	78286	154	
S1655-61924-5	78286	132		S1660-64003-2	78286	154	
S1655-61925	78286	132	106A	S1660-64003-3	78286	154	
S1655-61925-1	78286	132		S1660-64003-4	78286	154	
S1655-61928	78286	139	23	S1660-65100	78286	139	
S1655-61928-4	78286	139	28	S1665-20001	78286	87	171
S1655-61928-5	78286	139	26	S1665-20001	78286	98	
S1655-61929	78286	139		S1665-20001	78286	99	
S1655-63002	78286	150		S1665-20002-1	78286	98	
S1655-63002-1	78286	150		S1665-20002-1	78286	99	
S1655-63015	78286	150		S1665-20002-2	78286	98	
S1655-63015-1	78286	138		S1665-20002-2	78286	99	
S1655-63015-1	78286	139		S1665-20002-3	78286	98	
S1655-64000-4	78286	154		S1665-20002-3	78286	99	
S1655-64010-2	78286	154		S1665-20003	78286	98	
S1655-64010-3	78286	154	3	S1665-20003-1	78286	98	13
S1655-64011	78286	154	9	S1665-20003-1	78286	98	26
S1655-64212	78286	154		S1665-20003-1	78286	99	12
S1655-65005	78286	128	1	S1665-20003-1	78286	100	
S1655-65005	78286	129		S1665-20004	78286	100	67

REFERENCE NUMBER	MFG CODE	FIG NUMBER	ITEM NUMBER	REFERENCE NUMBER	MFG CODE	FIG NUMBER	ITEM NUMBER
S1665-20005	78286	100	60	S1665-20059-181	78286	32	5
S1665-20007		KITS		S1665-20059-182	78286	32	8
S1665-20007	78286	100	40	S1665-20059-183	78286	32	10
S1665-20008	78286	100	51	S1665-20059-184	78286	32	13
S1665-20009		KITS		S1665-20059-185	78286	32	15
S1665-20009	78286	100	30	S1665-20059-186	78286	32	18
S1665-20009-3	78286	106	84	S1665-20059-187	78286	32	20
S1665-20010	78286	100		S1665-20059-188	78286	32	23
S1665-20010-1	78286	100	9	S1665-20059-189	78286	32	120
S1665-20012	78286	100	1	S1665-20059-190	78286	32	123
S1665-20013	78286	100	3	S1665-20059-191	78286	32	116
S1665-20014	78286	100	10	S1665-20059-227	78286	32	134
S1665-20015	78286	100	11	S1665-20059-229	78286	32	139
S1665-20016	78286	100		S1665-20059-23	78286	32	130
S1665-20016-3	78286	100	8	S1665-20059-24	78286	32	133
S1665-20017	78286	100	6	S1665-20059-249	78286	33	20
S1665-20018	78286	100	62	S1665-20059-25	78286	32	112
S1665-20019	78286	100	64	S1665-20059-250	78286	33	23
S1665-20020	78286	100	66	S1665-20059-251	78286	32	93
S1665-20021	78286	100	5	S1665-20059-252	78286	32	96
S1665-20022	78286	100	53	S1665-20059-253	78286	32	102
S1665-20023	78286	100	21	S1665-20059-254	78286	32	105
S1665-20023	78286	106	73	S1665-20059-26	78286	32	115
S1665-20024	78286	100	45	S1665-20059-27	78286	32	143
S1665-20029	78286	94	22	S1665-20059-273	78286	32	52
S1665-20029	78286	96	145	S1665-20059-28	78286	32	146
S1665-20029	78286	100	59	S1665-20059-29	78286	32	108
S1665-20029	78286	106	110	S1665-20059-30	78286	32	111
S1665-20031	78286	32	214	S1665-20059-31	78286	32	147
S1665-20031-5	78286	32	215	S1665-20059-32	78286	32	150
S1665-20032-1	78286	33	39	S1665-20059-45	78286	35	13
S1665-20033	78286	32	171	S1665-20059-46	78286	35	16
S1665-20035		KITS		S1665-20059-47	78286	35	1
S1665-20035	78286	100	18	S1665-20059-48	78286	35	4
S1665-20038	78286	100	41	S1665-20059-5	78286	33	1
S1665-20048	78286	98	16	S1665-20059-57	78286	32	75
S1665-20048	78286	98	3	S1665-20059-58	78286	32	78
S1665-20048	78286	99	3	S1665-20059-59	78286	32	79
S1665-20050-1	78286	98	4	S1665-20059-6	78286	33	4
S1665-20050-1	78286	99		S1665-20059-60	78286	32	82
				S1665-20059-77	78286	32	1
S1665-20050-2	78286	99		S1665-20059-78	78286	32	4
S1665-20050-3	78286	98		S1665-20059-87	78286	32	36
S1665-20052	78286	98		S1665-20059-88	78286	32	39
S1665-20052-1	78286	98	21	S1665-20059-93	78286	35	7
S1665-20052-1	78286	98	8	S1665-20059-94	78286	35	10
S1665-20054	78286	98	24	S1665-20060	78286	32	202
S1665-20055	78286	100	12	S1665-20064-1	78286	32	190
S1665-20056	78286	98	18	S1665-20075-2	78286	34	32
S1665-20056	78286	98	5	S1665-20075-3	78286	33	43
S1665-20056	78286	99	4	S1665-20075-3	78286	34	
S1665-20057	78286	98	11	S1665-20076	78286	34	35
S1665-20058-111	78286	145	147	S1665-20077-1	78286	32	211
S1665-20058-16	78286	181		S1665-20077-1	78286	33	
S1665-20058-23	78286	125	20	S1665-20083-1	78286	32	106
S1665-20058-25	78286	125	21	S1665-20083-1	78286	35	
S1665-20058-3	78286	32		S1665-20084-3	78286	35	39
S1665-20058-32	78286	181	9	S1665-20084-4	78286	35	36
S1665-20059-13	78286	33	17	S1665-20088	78286	146	4
S1665-20059-16	78286	33		S1665-20090-1	78286	99	
S1665-20059-167	78286	32	61	S1665-20090-2	78286	98	
S1665-20059-169	78286	32	66	S1665-20092-3	78286	99	
S1665-20059-17	78286	33	9	S1665-20092-4	78286	99	8
S1665-20059-170	78286	32	69	S1665-20098	78286	99	9
S1665-20059-171	78286	32	71	S1665-20099	78286	98	
S1665-20059-172	78286	32	74	S1665-20110-10	78286	32	
S1665-20059-173	78286	32	83	S1665-20110-5	78286	32	
S1665-20059-174	78286	32	86	S1665-20111-12	78286	11	46
S1665-20059-175	78286	32	88	S1665-20111-12	78286	32	
S1665-20059-176	78286	32	91	S1665-20144	78286	32	177
S1665-20059-18	78286	33	12	S1665-61400	78286	85	

REFERENCE NUMBER	MFG CODE	FIG NUMBER	ITEM NUMBER	REFERENCE NUMBER	MFG CODE	FIG NUMBER	ITEM NUMBER
S1665-61403-1	78286	85	1	S1665-61533-153	78286	145	103
S1665-61403-11	78286	85	49	S1665-61533-155	78286	145	39
S1665-61403-13	78286	85	57	S1665-61533-157	78286	145	19
S1665-61403-15	78286	85	53	S1665-61533-159	78286	145	67
S1665-61403-21	78286	85	30	S1665-61533-160	78286	145	70
S1665-61403-23	78286	85	34	S1665-61533-161	78286	145	138
S1665-61403-27	78286	85		S1665-61533-162	78286	145	141
S1665-61403-3	78286	85	10	S1665-61533-163	78286	145	165
S1665-61403-39	78286	85	39	S1665-61533-164	78286	145	168
S1665-61403-41	78286	85	62	S1665-61533-165	78286	148	7
S1665-61403-43	78286	85		S1665-61533-166	78286	148	10
S1665-61403-45	78286	85		S1665-61533-167	78286	148	2
S1665-61403-5	78286	85	20	S1665-61533-168	78286	148	5
S1665-61403-51	78286	85		S1665-61533-169	78286	145	113
S1665-61403-9	78286	85	45	S1665-61533-170	78286	145	116
S1665-61407-1	78286	40	2	S1665-61533-171	78286	145	109
S1665-61407-1	78286	85		S1665-61533-172	78286	145	112
S1665-61410	78286	85		S1665-61533-173	78286	145	49
S1665-61411	78286	85	19A	S1665-61533-174	78286	145	52
S1665-61450	78286	96	146	S1665-61533-175	78286	145	6
S1665-61451	78286	96	93	S1665-61533-177	78286	145	3
S1665-61452	78286	96	95	S1665-61533-179	78286	145	44
S1665-61453	78286	96	94	S1665-61533-18	78286	144	63
S1665-61454	78286	96	137	S1665-61533-180	78286	145	47
S1665-61500-1	78286	40		S1665-61533-181	78286	145	58
S1665-61500-1	78286	144		S1665-61533-182	78286	145	61
S1665-61503	78286	97	53	S1665-61533-185	78286	145	83
S1665-61504	78286	96	136	S1665-61533-186	78286	145	86
S1665-61506	78286	97	52	S1665-61533-189	78286	145	133
S1665-61507	78286	97	29	S1665-61533-19	78286	144	65
S1665-61511	78286	97	32	S1665-61533-190	78286	145	136
S1665-61512-1	78286	96	91	S1665-61533-191	78286	145	128
S1665-61512-2	78286	96	85	S1665-61533-192	78286	145	131
S1665-61512-2	78286	96	86	S1665-61533-193	78286	145	123
S1665-61515	78286	91		S1665-61533-194	78286	145	126
S1665-61515-1	78286	91	1	S1665-61533-195	78286	145	29
S1665-61515-1	78286	92		S1665-61533-196	78286	145	32
S1665-61516	78286	92	20	S1665-61533-197	78286	145	23
S1665-61518	78286	92	19	S1665-61533-199	78286	145	24
S1665-61519	78286	92	21	S1665-61533-20	78286	144	68
S1665-61520	78286	146	40	S1665-61533-201	78286	145	88
S1665-61520	78286	147		S1665-61533-202	78286	145	91
S1665-61521	78286	147	39	S1665-61533-21	78286	144	134
S1665-61521	78286	149		S1665-61533-22	78286	144	137
S1665-61522	78286	146	9	S1665-61533-245	78286	145	62
S1665-61523	78286	147	36	S1665-61533-246	78286	145	65
S1665-61524-1	78286	144	126	S1665-61533-25	78286	144	80
S1665-61524-1	78286	145	176	S1665-61533-26	78286	144	83
S1665-61526	78286	96	80	S1665-61533-27	78286	144	86
S1665-61529	78286	97	34	S1665-61533-28	78286	144	89
S1665-61530	78286	96	108	S1665-61533-29	78286	144	90
S1665-61531	78286	144	23	S1665-61533-29	78286	145	75
S1665-61531	78286	146		S1665-61533-3	78286	144	5
S1665-61533-1	78286	144	3	S1665-61533-30	78286	145	78
S1665-61533-11	78286	147	13	S1665-61533-31	78286	144	28
S1665-61533-13	78286	144	18	S1665-61533-31	78286	145	18
S1665-61533-133	78286	145	9	S1665-61533-41	78286	144	95
S1665-61533-135	78286	145	22	S1665-61533-41	78286	145	71
S1665-61533-137	78286	145	34	S1665-61533-42	78286	144	98
S1665-61533-139	78286	145	93	S1665-61533-42	78286	145	74
S1665-61533-14	78286	144	21	S1665-61533-43	78286	144	100
S1665-61533-141	78286	145	97	S1665-61533-44	78286	144	103
S1665-61533-142	78286	145	100	S1665-61533-45	78286	144	105
S1665-61533-143	78286	148	14	S1665-61533-47	78286	144	110
S1665-61533-144	78286	148	17	S1665-61533-47	78286	145	143
S1665-61533-145	78286	145	160	S1665-61533-48	78286	145	146
S1665-61533-147	78286	145	148	S1665-61533-49	78286	144	114
S1665-61533-149	78286	148	23	S1665-61533-5	78286	146	16
S1665-61533-15	78286	144	24	S1665-61533-51	78286	144	75
S1665-61533-150	78286	148	26	S1665-61533-53	78286	144	70
S1665-61533-151	78286	145	79	S1665-61533-55	78286	144	22

REFERENCE NUMBER	MFG CODE	FIG NUMBER	ITEM NUMBER	REFERENCE NUMBER	MFG CODE	FIG NUMBER	ITEM NUMBER
S1665-61533-57	78286	146	20	S1665-61593-3	78286	106	108
S1665-61533-59	78286	147	5	S1665-61597	78286	103	
S1665-61533-60	78286	147	8	S1665-61600	78286	105	33
S1665-61533-61	78286	106	36	S1665-61601	78286	105	32
S1665-61533-63	78286	147	1	S1665-61602	78286	105	35
S1665-61533-64	78286	147	4	S1665-61603	78286	106	109
S1665-61533-67	78286	144	12	S1665-61604	78286	103	5
S1665-61533-69	78286	146	24	S1665-61605	78286	106	88
S1665-61533-7	78286	146	12	S1665-61605	78286	106	98
S1665-61533-71	78286	146	32	S1665-61606	78286	106	104
S1665-61533-72	78286	146	35	S1665-61606	78286	106	94
S1665-61533-73	78286	144	9	S1665-61607	78286	106	
S1665-61533-75	78286	144	15	S1665-61607-1	78286	106	112
S1665-61533-77	78286	144	16	S1665-61607-2	78286	106	111
S1665-61533-79	78286	144	17	S1665-61608	78286	106	32
S1665-61533-81	78286	144	40	S1665-61610-4	78286	94	23
S1665-61533-82	78286	144	43	S1665-61610-4	78286	96	
S1665-61533-83	78286	144	36	S1665-61611-1	78286	94	
S1665-61533-85	78286	144	31	S1665-61612	78286	106	
S1665-61533-85	78286	145	118	S1665-61613-4	78286	101	132
S1665-61533-86	78286	145	121	S1665-61613-4	78286	105	
S1665-61533-87	78286	144	45	S1665-61615	78286	106	
S1665-61533-89	78286	144	49	S1665-61618	78286	145	158
S1665-61533-9	78286	146	28	S1665-61620	78286	97	19
S1665-61533-91	78286	144	53	S1665-61622	78286	97	8
S1665-61533-93	78286	147	9	S1665-61623	78286	97	12
S1665-61533-95	78286	181	1	S1665-61624	78286	97	54
S1665-61533-96	78286	181	4	S1665-61625	78286	97	16
S1665-61533-97	78286	144	60	S1665-61626	78286	97	14
S1665-61533-98	78286	144		S1665-61628	78286	96	45
S1665-61533-99	78286	144		S1665-61630	78286	94	
S1665-61535	78286	96	40	S1665-61631	78286	94	10
S1665-61537	78286	97	17	S1665-61632	78286	94	16
S1665-61541	78286	94		S1665-61633	78286	96	52
S1665-61544-1	78286	32	198	S1665-61635	78286	96	53
S1665-61544-2	78286	32	200	S1665-61636	78286	94	1
S1665-61548	78286	144	142	S1665-61638-1	78286	95	5
S1665-61548	78286	145	186	S1665-61638-2	78286	95	1
S1665-61549	78286	147	15	S1665-61640	78286	95	2
S1665-61551	78286	106		S1665-61642	78286	95	4
S1665-61553-151	78286	145		S1665-61643	78286	95	6
S1665-61553-169	78286	145		S1665-61644	78286	95	7
S1665-61553-3	78286	105	45A	S1665-61645-1	78286	95	8
S1665-61553-3	78286	106		S1665-61646	78286	94	12
S1665-61554	78286	106	86	S1665-61647-1	78286	94	14
S1665-61555-1	78286	105	15	S1665-61647-2	78286	94	15
S1665-61556-1	78286	105		S1665-61650	78286	96	147
S1665-61557	78286	105	25	S1665-61650	78286	97	
S1665-61562	78286	105	21	S1665-61651-1	78286	96	89
S1665-61563	78286	105	28	S1665-61651-3	78286	91	9
S1665-61564	78286	105	18	S1665-61651-3	78286	96	
S1665-61565	78286	105	30	S1665-61657	78286	106	67
S1665-61566	78286	105	53	S1665-61658	78286	94	13
S1665-61567	78286	106		S1665-61660	78286	94	21
S1665-61567-1	78286	106	85	S1665-61661	78286	106	
S1665-61570	78286	106	130	S1665-61662	78286	106	
S1665-61572-1	78286	96		S1665-61662-1	78286	106	
S1665-61572-2	78286	96		S1665-61663-1	78286	96	23
S1665-61572-3	78286	96		S1665-61663-2	78286	96	16
S1665-61572-3	78286	96	103	S1665-61663-3	78286	96	8
S1665-61572-4	78286	96		S1665-61664-1	78286	96	9
S1665-61572-4	78286	96	104	S1665-61664-2	78286	96	18
S1665-61577	78286	106	113	S1665-61664-2	78286	96	24
S1665-61578	78286	106	120	S1665-61664-3	78286	96	17
S1665-61584	78286	106	136	S1665-61666	78286	106	131
S1665-61589	78286	106		S1665-61666-2	78286	106	132
S1665-61590-1	78286	106		S1665-61667	78286	106	127
S1665-61592	78286	106		S1665-61668	78286	106	
S1665-61593	78286	106		S1665-61669	78286	106	
S1665-61593-1	78286	106		S1665-61669-1	78286	106	119
S1665-61593-2	78286	106	107	S1665-6167-1	78286	106	

REFERENCE NUMBER	MFG CODE	FIG NUMBER	TEM NUMBER	REFERENCE NUMBER	MFG CODE	FIG NUMBER	ITEM NUMBER
S1665-61673	78286	106		S1670-10106-2	78286	A5	
S1665-61675	78286	106		S1670-10107-12	78286	A5	
S1665-61676-1	78286	106		S1670-10107-16	78286	A5	6
S1665-61676-2	78286	106		S1670-10108	78286	A6	1
S1665-61677	78286	106	19	S1670-10111-3	78286	A6	2
S1665-61678	78286	106	14	S1670-10151	78286	A6	3
S1665-61679	78286	32	193	S1670-10201-1	78286	A6	4
S1665-61679	78286	144	129	S1670-10201-2	78286	A6	
S1665-61679	78286	145	179	S1670-10201-3	78286	A6	
S1665-61684	78286	91	26	S1670-10207	78286	A6	
S1665-61685	78286	91	33	S1670-10210	78286	A6	6
S1665-61686	78286	91		S1670-10304	78286	A7	1
S1665-61686-1	78286	91	30	S1670-10305	78286	A7	2
S1665-61687	78286	96	92	S1670-10307-3	78286	A7	3
S1665-61687-3	78286	96		S1670-10308	78286	A7	4
S1665-61690	78286	91	32	S1670-10309-1	78286	A7	5
S1665-61691	78286	91	34	S1670-10310	78286	A18	
S1665-61750	78286	91	35	S1670-10312-1	78286	A5	
S1665-61750	78286	94		S1670-10313	78286	A8	2
S1665-61750-1	78286	94		S1670-10314-1	78286	A8	3
S1665-61750-1	78286	96		S1670-10315	78286	A8	4
S1665-61752	78286	105	43	S1670-10317-5	78286	A8	6
S1665-61752	78286	106		S1670-10317-8	78286	A8	
S1665-61752-1	78286	106		S1670-10317-9	78286	A8	7
S1665-61755	78286	94	19	S1670-10319	78286	A9	
S1665-61755	78286	106	33	S1670-10319-1	78286	A9	1
S1665-61758	78286	94	3	S1670-10319-2	78286	A9	2
S1665-61762	78286	96	15	S1670-10321	78286	A9	
S1665-61765	78286	96		S1670-10322	78286	A9	
S1665-61767	78286	94	7	S1670-10328	78286	A9	4
S1665-61768	78286	106		S1670-10330-3	78286	A9	6
S1665-61768-2	78286	106	69	S1670-10331-3	78286	A9	7
S1665-61769-1	78286	106	41	S1670-10332-2	78286	A10	2
S1665-61769-1	78286	106	48	S1670-10332-3	78286	A10	3
S1665-61769-2	78286	106	3	S1670-10333	78286	A10	4
S1665-61770	78286	106		S1670-10334	78286	A10	5
S1665-61772	78286	106		S1670-10337-3	78286	A10	6
S1665-61772-1	78286	106	60	S1670-10338	78286	A10	
S1665-61774-1	78286	106		S1670-10339	78286	A10	7
S1665-61775	78286	106	61	S1670-10340	78286	A10	
S1665-61776	78286	106		S1670-10341	78286	A10	8
S1665-61776-1	78286	106	53	S1670-10347	78286	A11	1
S1665-61777	78286	106		S1670-10348	78286	A11	2
S1665-61778-1	78286	106	42	S1670-10349	78286	A11	
S1665-61778-1	78286	106	49	S1670-10351	78286	A11	3
S1665-61778-2	78286	106	43	S1670-10354	78286	A11	4
S1665-61778-2	78286	106	50	S1670-10354-1	78286	A11	
S1665-61778-3	78286	106	4	S1670-10357	78286	A11	
S1665-61778-4	78286	106	5	S1670-10358	78286	A11	5
S1665-61782-1	78286	145	170	S1670-10359	78286	A11	6
S1665-61782-1	78286	148		S1670-10360	78286	A11	7
S1665-61790-1	78286	40	10	S1670-10362	78286	A12	1
S1665-61790-1	78286	145		S1670-10363-4	78286	A12	2
S1665-61791	78286	145		S1670-10364	78286	A12	3
S1665-61791-1	78286	145	13	S1670-10368	78286	A12	
S1665-61791-2	78286	145	16	S1670-10368-1	78286	A12	5
S1665-61791-3	78286	145		S1670-10369	78286	A12	6
S1665-61791-5	78286	145	14	S1670-10370	78286	A12	7
S1665-61813	78286	148	41	S1670-10370-6	78286	A12	
S1665-61813	78286	149		S1670-10371-3	78286	A13	1
S1665-61814	78286	148	37	S1670-10372-3	78286	A13	2
S1665-61816	78286	148	31	S1670-10372-5	78286	A13	
S1665-61819	78286	145	155	S1670-10374-5	78286	A13	3
S1665-61847	78286	106		S1670-10375	78286	A13	
S1665-61900	78286	132		S1670-10376-1	78286	A13	4
S1665-80000-1	78286	167	21	S1670-10377	78286	A13	5
S1665-80000-1	78286	181		S1670-10378	78286	A13	6
S1670-10013	78286	F1	11	S1670-10380	78286	A14	1
S1670-10051-1	78286	F1	12	S1670-10382	78286	A14	2
S1670-10105-2	78286	A5	5	S1670-10383	78286	A14	3
S1670-10106-1	78286	A5		S1670-10384-3	78286	A14	4

REFERENCE NUMBER	MFG CODE	FIG NUMBER	ITEM NUMBER	REFERENCE NUMBER	MFG CODE	FIG NUMBER	ITEM NUMBER
S1670-10385	78286	A14	5	S1670-10525	78286	F2	
S1670-10386	78286	A14	6	S1670-10526-15	77272	F2	
S1670-10386	02106	A14	6	S1670-10564-3	78286	A21	3
S1670-10388	78286	A14	7	S1670-10566	78286	A24	6
S1670-10390	78286	A15	1	S1670-10570	78286	A21	
S1670-10392-6	78286	A15	2	S1670-10570-1	78286	A21	5
S1670-10393	78286	A15	3	S1670-10600	78286	A22	1
S1670-10394	78286	A15	4	S1670-10601	78286	E33	2
S1670-10396	78286	A16	1	S1670-10602	78286	A22	
S1670-10396-3	78286	A16		S1670-10603	78286	A22	
S1670-10397-1	78286	A16	2	S1670-10604	78286	A22	
S1670-10398	78286	A16	3	S1670-10605	78286	A22	
S1670-10399	78286	A16	4	S1670-10608	78286	A22	2
S1670-10399-1	78286	A16		S1670-10609	78286	A22	
S1670-10402	78286	A6		S1670-10612-8	78286	A22	3
S1670-10406-2	78286	A17	1	S1670-10624	78286	A22	4
S1670-10407	78286	A17	2	S1670-10626-4	78286	A22	5
S1670-10413	78286	A1	1	S1670-10629	78286	A3	9
S1670-10413-1	78286	A1		S1670-10632-7	78286	F4	7
S1670-10413-3	78286	A1		S1670-10633-13	78286	F4	8
S1670-10414	78286	A17	4	S1670-10637	78286	A23	1
S1670-10415	78286	A17	5	S1670-10650	78286	A23	
S1670-10418	78286	A18	1	S1670-10650-11	78286	A23	
S1670-10433	78286	A18		S1670-10650-13	78286	A23	2
S1670-10433-3	78286	A18	2	S1670-10673	78286	A23	3
S1670-10435	78286	A18	3	S1670-10676	78286	A23	4
S1670-10438	78286	A18	4	S1670-10694	78286	E77	3
S1670-10447	78286	A18		S1670-10932-5	78286	A23	5
S1670-10447-7	78286	A18	5	S21042-08	96906	77	
S1670-10449	78286	A19		S21083N06	96906	118	
S1670-10449-4	78286	A19	1	S25071	90299	79A	66
S1670-10452	78286	A19	2	S25071		KITS	
S1670-10453	78286	A19	3	S3-150	72794	50	43
S1670-10455	78286	A3	1	S3-175	72794	50	
S1670-10457	78286	A19	4	S35337-42	96906	131	
S1670-10458-1	78286	A19	5	S4-200	72794	50	238
S1670-10459-4	78286	A19	6	S4-200	72794	50	241
S1670-10466	78286	A19	7	S4-200	72794	50	244
S1670-10467	78286	A19	8	S4-200	72794	132	150
S1670-10468	78286	A20	1	S5R	43991	125A	107
S1670-10469	78286	A20	2	S510353		KITS	
S1670-10471	78286	A20		S510353	78286	12	
S1670-10471-15	78286	A20		S510353	78286	19	20
S1670-10471-22	78286	A20	3	S510353	78286	21	30
S1670-10475	78286	A20	4	S510353	78286	21	59
S1670-10479-14	78286	A20	5	S530975-2	78286	172	24
S1670-10481-25	78286	F2	1	S530975-2	78286	172	69
S1670-10481-9	78286	F2		S555318	78286	162	
S1670-10482-9	78286	150	12	S6000-109	12839	190	28
S1670-10484	78286	A20	6	S6000-34	12839	E29	5
S1670-10485	78286	A20	7	S6170-35124-1	78286	A3	
S1670-10486	78286	A21	1	S8057E10		KITS	
S1670-10486-2	78286	A21		S8057E12		KITS	
S1670-10487	78286	A21	2	S8057E20		KITS	
S1670-10491-2	78286	F2	2	S8057E25		KITS	
S1670-10492-2	78286	F2	3	S8057E5		KITS	
S1670-10493-14	78286	F2	4	S8150D416-14		KITS	
S1670-10494-2	78286	F2	5	S8150D416-56		KITS	
S1670-10495-2	78286	F3	1	S8153-10-064C		KITS	
S1670-10496-2	78286	F3	2	S8157A199-063		KITS	
S1670-10497-2	78286	F3	3	S8157C82-032A	78286	96	10
S1670-10498-2	78286	F3	4	S8239A11		KITS	
S1670-10499-20	78286	F3	5	S8239A6		KITS	
S1670-10503-4	78286	F3	6	S8239B11		KITS	
S1670-10504-2	78286	F4	1	S8239B6		KITS	
S1670-10506-14	78286	F4	2	S8267-20-108		KITS	
S1670-10506-16	78286	F4		S9075-3	91547	MSUP	
S1670-10506-4	78286	F4	4	TA27321	96452	74	
S1670-10508-2	78286	F4	5	TB155S4-8D	00624	181	20
S1670-10510-2	78286	F4	6	TD800	74063	138	62
S1670-10523	78286	F2		TD805S	74063	132	142

REFERENCE NUMBER	MFG CODE	FIG NUMBER	ITEM NUMBER	REFERENCE NUMBER	MFG CODE	FIG NUMBER	ITEM NUMBER
TF100-2	59875	175		TF3557	59875	175G	17
TF105-1	59875	175G		TF3558		KITS	
TF106-1	59875	175G	32	TF3559		KITS	
TF107		KITS		TF3559	59875	175G	13
TF107	59875	175G	31	TF3564	59875	175G	35
TF108	59875	175G	53	TF3587		KITS	
TF109-1	59875	175G	8	TF3587	59875	175G	18
TF110		KITS		TF3588-1		KITS	
TF110	59875	175G	51	TF3588-1	59875	175G	19
TF112	59875	175G	50	TF3589	59875	175G	25
TF119		KITS		TF3590		KITS	
TF121		KITS		TF3590	59875	175G	22
TF121	59875	175G	43	TF3813	59875	175G	
TF126		KITS		TF3861		KITS	
TF126	59875	175G	44	TF3861	59875	175G	29
TF134		KITS		TF4620	59875	175G	33
TF142-4		KITS		TF4621		KITS	
TF147		KITS		TF4621	59875	175G	34
TF151		KITS		TF7200-1	58332	E36	
TF152-1		KITS		TF800	59875	175	
TF155-1		KITS		TF822-1		KITS	
TF155-1	59875	175G	15	TF823		KITS	
TF159		KITS		TF823	59875	175G	40
TF160		KITS		TF824		KITS	
TF160	59875	175G	4	TF824	59875	175G	39
TF174	59875	175		TF825		KITS	
TF174	59874	KITS		TF825	59875	175G	42
TF181	59875	175		TF827-1		KITS	
TF181-1	59875	175		TF857		KITS	
TF181-1	59875	KITS		TF873-1		KITS	
TF188		KITS		TF873-1	59875	175G	41
TF2161		KITS		TSC61-701XX	06275	114E	
TF3500-2	59875	175		TSC61906	80510	114E	3
TF3500-4	59875	175		TSC63-901XX	06275	114E	
TF3500-4	59875	175G		TSC64-101XX	06275	114F	11
TF3502	59875	175G	46	TSC64101-1	80510	114E	26
TF3505	59875	175		TSC64101X	06275	114E	
TF3505-2	59875	175		TSC64101X	80510	114F	
TF3505-2	59875	KITS		TSC64101XX	06275	114E	
TF3505-2	59875	175G		TSWC64101	80510	114E	
TF3506	59875	175		TSWC64101	80510	114F	18
TF3506-2	59875	175		TSWC64901X	80510	114E	
TF3506-2	59875	KITS		TSWC64901X	80510	114F	20
TF3506-2	59875	175G		TSWC64902	80510	114E	
TF3510		KITS		TSWC64902	80510	114F	23
TF3510	59875	175G	27	TX90047-21		KITS	
TF3513	59875	175G	47	TX90790-4		KITS	
TF3514	59875	175G	48	TX90790-5		KITS	
TF3515	59875	175G	49	TX90903-1		KITS	
TF3517	59875	175G	45	TX93001-3		KITS	
TF3517	59875	175G	52	TX93001-3	59875	175G	2
TF3518-2	59875	175G	36	TX93071-8	59875	21	
TF3522		KITS		TX94000-1		KITS	
TF3530-1	59875	175G		TX94000-1	59875	175G	1
TF3531	59875	175G		TX94003		KITS	
TF3532	59875	175G	28	TX94003	59875	175G	6
TF3534	59875	175G		TX94003-4		KITS	
TF3540		KITS		TX94003-4	59875	175G	5
TF3540	59875	175G	23	TX94003-5		KITS	
TF3541		KITS		T015519S4-10D	00624	BULK	
TF3541	59875	175G	24	T1000		KITS	
TF3543		KITS		T1011		KITS	
TF3543	59875	175G	20	T150S1-10D	00624	83	
TF3545-1	59875	175G		T2	81349	115	48
TF3546-1	59875	175G	16	T25037	06848	E28	5
TF3547-1		KITS		T25039	06848	E28	6
TF3547-1	59875	175G	14	T25040	06848	E29	1
TF3551		KITS		T25060	06848	E29	2
TF3551	59875	175G	21	T25079	06848	E29	3
TF3556	59875	175G	26	T25128	06848	E70	3
TF3557		KITS		T25138	06848	E70	4

REFERENCE NUMBER	MFG CODE	FIG NUMBER	ITEM NUMBER	REFERENCE NUMBER	MFG CODE	FIG NUMBER	ITEM NUMBER
T25261	06848	E77	2	W1700 1-8D	96138	113	16
T25262	06848	E29	6	W1700 1-8D	96138	114	8
T26801	06348	E30	1	W17379		KITS	
T27-050	12849	79	24	W17379	70255	44C	15
T29-012	12849	210	12	W17387		KITS	
UD6-11	91146	135	1	W17387	70255	44C	26
UD6-11	91146	135	4	W17392	70255	44C	34
UG563BU	80056	BULK		W20048-12	70255	44C	11
UJ299	08273	107	101	W20136		KITS	
UJ299	08273	107	45	W20136	70255	44C	14
UJ299	08273	107	69	W20143	70255	44C	44
UJ299	08273	107	97	W20144	70255	44C	43
UL11037-1QT	47695	MSUP		W20150	70255	44B	10
US25071	90299	KITS		W20166-2		KITS	
US25071		KITS		W20166-8	70255	44B	20
US40387		KITS		W20166-9	70255	44B	14
US40387	90299	79A		W20168	70255	44B	17
US40387	90299	81A	53	W20169	70255	44B	18
US40388		KITS		W20170-4	70255	44B	21
US40388	90299	79A	70	W20208	70255	41	66
US40388	90299	81A	50	W20388	70255	44C	7
US40389		KITS		W2091-2A4	70255	44A	
US40473		KITS		W2111-24A	70255	44A	8
US60848	90299	KITS		XW17380-4	70255	44C	
US60848		KITS		XW17386	70255	44C	32
US67892	90299	81A	44	XW20020	70255	44C	29
US67892	90299	KITS		XW20067-1975	70255	44A	9
US67892		KITS		XW20101S58	70255	44	41
US68096	90299	79A	67	XW20101S58	70255	44A	
US68096	90299	79A	74	XW20119	70225	44C	8
US68096	11976	81A	38	XW20119		KITS	
US68096	11976	81A	47	XW20128-1		KITS	
US68096		KITS		XW20128-1	70255	44C	12
US68096	90299	KITS		XW20128-2		KITS	
US68096		KITS		XW20128-2	70255	44C	10
US76357	11976	81A	35	XW20128-3		KITS	
US76357	11976	81A	42	XW20128-3	70255	44C	9
US76357	90299	KITS		XW20137	70255	44C	
US76357		KITS		XW20142	70255	44C	
U1760A2	78943	79		XW20145-2	70255	44C	37
U2596-1	78943	78		XW20173-1	70255	41	64
U448-2	78943	78		XW20173-1	70255	44A	12
U449-2	78943	78		XW20173-1	70255	44C	
U896	78943	78		XW20174-1	70255	44C	
U959	78943	78	21	XW20175	70255	44C	45
VG300	08484	125A	102	XW20195-2	70255	44C	3
VJR2485	01843	128		XW20336-1	70255	130	24
VJ71		KITS		XW20336-1	70255	44A	13
VJ71	08484	125A	147	XW20345-344-120	70255	44A	11
VJ83		KITS		XW20345-344-120	70255	44B	
V20037	70255	44A	5	XW20368	70255	44B	25
V20111	70255	44A	1	XW20441	70255	44C	
V21020	70255	44A	4	XW20442		KITS	
V21030	70255	44A	3	XW20442	70255	44C	23
V21090	70255	44A	2	XW20863	70255	44C	
V8	81349	114	48A	X27R	76260	12	
WB00000D	93957	115		X30	89944	114A	22
WB24	10402	154		X30	89944	114C	19
WC02	72962	173	37	X30	89944	114L	20
WPJ1825-22		KITS		X31	89944	114B	24
WRM10	10402	154	11B	X31	89944	114B	26
WRM24	10402	154		X31	89944	114D	26
WRM25	10402	154	11C	X31	89944	114D	28
WRM30	10402	154	11D	X5112-26	89944	114B	94
WRM45K	10402	154	11A	X526	89944	114L	3
WR3	89944	114B	61	X591	70485	BULK	
WR3	89944	114D	67	X702-181A	75477	123	
WS491	80738	MSUP		X702-181A	75477	123B	
WO-ON	19315	BULK		X702-194	00531	84	
WO6CP	19315	BULK		X702-194A	32537	83A	
W11D832	71087	154	19	X702-194A	32537	83	

REFERENCE NUMBER	MFG CODE	FIG NUMBER	ITEM NUMBER	REFERENCE NUMBER	MFG CODE	FIG NUMBER	ITEM NUMBER
X702-194A	00531	84		0425-004	56232	113F	31
X87-1	13829	12		0465	04347	MSUP	
X87-1	13829	16	33A	05-321302		KITS	
X87-1	13829	19	15	05-321306		KITS	
YMP226SL	24892	38	22	05-340109		KITS	
Y1112-10-16FJ		KITS		05-340403		KITS	
Y1112-10-16FJ	08484	125A	111	05-340506		KITS	
Y1112-10-16FJ	08484	125A	26	05-340507		KITS	
Y1112-10-20FJ	08484	125A	114	05-346301		KITS	
Y1112-10-20FJ	08484	125A	79	05-349395		KITS	
Y1112-10-20FJ	08484	125A	89	05-360009		KITS	
Y1112-416-20FH		KITS		05-370019		KITS	
Y1112-416-20FH	08484	125A	2	05-370043		KITS	
Y1112-6-12F		KITS		05-370061		KITS	
Y1112-6-12F	08484	125A	17	05-370092		KITS	
Y1112-6-12FJ	08484	125A	105	05-374022		KITS	
Y1112-6-32F		KITS		05-374036		KITS	
Y1112-6-32F	08484	125A	76	05-374040		KITS	
Y1112-6-32FH	08484	125A	69	05-374065		KITS	
Y1113-10-16FH		KITS		05-420503		KITS	
Y1113-10-16FH	08484	125A	41	05-425106		KITS	
ZN2268	96537	125		05-425902		KITS	
Z20-700	16688	114		05-425905		KITS	
Z22-120	16688	113		05-505918		KITS	
Z22-120	16688	114		05-620001		KITS	
Z22-76	16688	113		05-620002		KITS	
Z22-76	16688	114		05-631012		KITS	
Z22-84	16688	113		05-700250		KITS	
Z22-84	16688	114		05-700315		KITS	
Z8-199	16688	113		05631002		KITS	
0-12	19315	114S	111	0611082	71379	115	
0-12	19315	114S	113	066650	70138	78	
0-14	19315	114S	116	08-002	77200	84	36A
0-2252	75511	124		08-003	77200	84	37
0-236-35	19315	113E	70	08-006	77200	84	39
0-2470	75511	214A	232	080108-010-01	77200	83	26
0-330-1		KITS		080108-010-01	77200	84	30
0CKL0100V5A	29666	BULK		1-160-317-01	91547	77	2
00		K4		1-160-317-01	91547	144	11
0100V4A	29666	BULK		1-160-317-01	91547	145	2
014501S4-16D	00624	173	22	1-160-317-01	91547	181	
014501S5-16D	00624	77	27	1-160-317-01	91547	181	29
015501S4-4D	00624	173	27	1-317-1	95712	137	
015501S4-6D	00624	173	33	1-332-1	95712	137	
015501S5-4D	00624	77	11	1-333-1	95712	137	
015501S5-4D	00624	77	14	1-902-1	95712	137	
015501S5-4D	00624	110		1-903-1	95712	137	
015501S5-4D	00624	111	16	1-906-1	95712	137	
015501S5-4D	00624	162	1A	1-906-1	95712	137	5
015501S5-6D	00624	77		1-907-1	95712	137	
025-484-00	71468	162	61	1-908-1	95712	137	
03FA135	00736	28	12	1B7309	79318	114G	84
03S10769	00736	28	5	1B7309	79318	114H	83
03S769-158	00736	28		1B7309	79318	114J	69
03S769-218	00736	28	13	1B7336	79318	114G	63
03S769-231	00736	28		1B7336	79318	114H	63
0379-3	56232	113F	163	1B7336	79318	114J	50
0406-016	56232	113F	115	1D5	66640	206	
0406-016	56232	113F	137	1SM1	91929	128A	123
0406-017	56232	113F		10		KITS	
0406-030	56232	113F	35	10-101196-14P		KITS	
0406-043	56232	113F	230	10-101196-14P	77820	213B	7
0406-075	56232	113F	211	10-1125		KITS	
0406-077	56232	113F	90	10-125921	77820	E93	
0406-078	56232	113F	217	10-125921	77820	183A	
0406-079	56232	113F	109	10-125921	77820	212A	214
0406-079	56232	113F	99	10-130712-3S	77820	213A	8
0406-098	56232	113F	39	10-130722-14S	77820	212A	65
0406-111	56232	113F	72	10-1448-1-1	45681	78A	20
0410-076	56232	113F	203	10-1448-2-2	45681	78A	1
0410-077	56232	113F	88	10-1448-2-7	45681	78A	15

REFERENCE NUMBER	MFG CODE	FIG NUMBER	ITEM NUMBER	REFERENCE NUMBER	MFG CODE	FIG NUMBER	ITEM NUMBER
10-14942		KITS		10-3677		KITS	
10-14942	77820	212A	123	10-3677	77820	212A	184
10-15676	77820	212A	99	10-3677	77820	212A	75
10-157320Y	77820	212A		10-371012	77820	212A	219
10-15741	77820	212A		10-371014	77820	212A	201
10-176119	77820	212A	155	10-371091	77820	212A	
10-176161	77820	E93		10-37230-14P	77820	213A	4
10-176161	77820	212A	218	10-37288-7S		KITS	
10-176165	77820	212A	223	10-37288-7S	77820	212A	27
10-176168	77820	212A		10-37289-14S		KITS	
10-176172	77820	212A	47	10-37289-14S	77820	213B	6
10-176175	77820	212A		10-37320-14S		KITS	
10-176335	77820	212A	74	10-37320-14S	77820	212A	23
10-176407	77820	212A	87	10-3768	77820	212A	
10-176442	77820	212A		10-3768-1	77820	212A	102
10-17702		KITS		10-3768-2	77820	212A	
10-17702	77820	212A	188	10-37700	77820	212A	4
10-180003-1		KITS		10-377044-1	77820	213	7
10-180050-2	77820	212A	162	10-37818	77820	212A	34
10-180050-2	77820	212A	173	10-37818	77820	212A	38
10-180115-1	77820	212A	68	10-37818	71102	213A	10
10-18183		KITS		10-37818	77820	213B	9
10-18184		KITS		10-3793		KITS	
10-18184	77820	212A	85	10-3845Y	77820	212A	96
10-18264		KITS		10-3846	77820	212A	98
10-18264	77820	212A	215	10-38482		KITS	
10-18264	77820	212A	40	10-38482	77820	212A	158
10-19399		KITS		10-38482	77820	212A	169
10-19399	77820	212A	21	10-38771	77820	212A	161
10-20688		KITS		10-38771	77820	212A	172
10-20688	77820	212A	148	10-38771	77820	212A	36
10-20688	77820	212A	139	10-38771	77820	212A	90
10-20774		KITS		10-38949		KITS	
10-20774	77820	212A	76	10-38949	77820	212A	28
10-20774	77820	212A	78	10-38949	77820	212A	48
10-22631		KITS		10-40200		KITS	
10-22631	77820	212A	41	10-40200	77820	212A	22
10-23992	77820	213A	3	10-40450-14S		KITS	
10-24115		KITS		10-40450-14S	77820	212A	30
10-24115	77820	212A	190	10-40450-14S	77820	212A	54
10-24812		KITS		10-40450-16	77820	122	4
10-24812	77820	212A	207	10-40450-22S		KITS	
10-2501		KITS		10-40450-22S	77820	212A	26
10-2501	77820	212A	156	10-40450-22S	77820	213A	7
10-2501	77820	212A	167	10-40822-14		KITS	
10-2543-8-1	45681	78A	18	10-40822-14	77820	212A	66
10-26089	77820	212A	147	10-40822-14	77820	213B	8
10-26094	77820	212A	111	10-42664-2S	06840	180	
10-26095	77820	212A	107	10-446-1	45681	78A	3
10-26108	77820	212A	101	10-50051		KITS	
10-26924	77820	212A	61	10-50051	77820	212A	163
10-2977	77820	212A	100	10-50051	77820	212A	43
10-30632	77820	212A	69	10-50051	77820	212A	81
10-31742	77820	212A	106	10-50051	77820	212A	84
10-32996	77820	212A	57	10-50078		KITS	
10-33508-1		KITS		10-50078	77820	212A	160
10-33508-1	77820	212A	110	10-50078	77820	212A	171
10-33508-2	77820	212A		10-50078	77820	212A	33
10-33508-3	77820	212A		10-50078	77820	212A	89
10-33670		KITS		10-5130		KITS	
10-33670	77820	212A		10-52519		KITS	
10-33670	77820	212A	32	10-52519	77820	212A	185
10-33670	77820	212A	50	10-52533		KITS	
10-33670	77820	212A	88	10-52533	77820	212A	132
10-34615		KITS		10-52533	77820	212A	134
10-34615	77820	212A	121	10-52541		KITS	
10-3498		KITS		10-52541	77820	212A	183
10-3498	77820	212A	194	10-52586	77820	212A	182
10-35330-3	77820	175	11	10-52595		KITS	
10-354172	77820	212A	63	10-52595	77820	212A	
10-35489	77820	175		10-52595	77820	212A	211

REFERENCE NUMBER	MFG CODE	FIG NUMBER	ITEM NUMBER	REFERENCE NUMBER	MFG CODE	FIG NUMBER	ITEM NUMBER
10-52617	77820	213		10-78640	77820	212A	176
10-52617	77820	BULK		10-78642	77820	212A	179
10-5282		KITS		10-78666	77820	212A	35
10-5282	77820	212A	7	10-78669		KITS	
10-5282	77820	212A	93	10-78669	77820	212A	136
10-54155		KITS		10-78670		KITS	
10-54155	77820	212A	213	10-78670	77820	212A	135
10-54156		KITS		10-78671		KITS	
10-54156	77820	212A	212	10-78671	77820	212A	39
10-54449		KITS		10-78690		KITS	
10-55085-2	77820	128	5	10-78690	77820	212A	143
10-55327	77820	212A	58	10-78691		KITS	
10-56900-4	77820	183A		10-78691	77820	212A	144
10-56900-4	77820	212A		10-78695		KITS	
10-56933		KITS		10-78695	77820	212A	118
10-56933	77820	212A	146	10-78698		KITS	
10-56933	77820	212A	149	10-78698	77820	212A	114
10-56941	77820	212A	222	10-7877	75511	124	
10-56954	77820	212A	198	10-79344	77820	212A	105
10-56958		KITS		10-79380		KITS	
10-56958	77820	212A	202	10-79380	77820	212A	92
10-59244	77820	212A	199	10-80614	77820	212A	140
10-59251	77820	212A		10-80616	77820	212A	
10-59253	77820	212A	208	10-80617	77820	212A	
10-59263		KITS		10-80620	77820	212A	187
10-59263	77820	212A	55	10-80622		KITS	
10-59264		KITS		10-80622	77820	212A	193
10-59264	77820	212A	191	10-80625		KITS	
10-59278	77820	212A	3	10-80625	77820	212A	133
10-59282		KITS		10-80628		KITS	
10-59282	77820	212A	170	10-80628	77820	212A	131
10-59284	77820	212A	166	10-80629		KITS	
10-59293		KITS		10-80629	77820	212A	125
10-59293	77820	212A	129	10-80630		KITS	
10-59294	77820	212A	200	10-80630	77820	212A	122
10-59296	77820	212A	79	10-80632Y	77820	212A	56
10-59297-1		KITS		10-80636		KITS	
10-59297-1	77820	212A	37	10-80636	77820	212A	186
10-59297-1	77820	212A	51	10-80640-1	77820	213	4
10-59297-2		KITS		10-80709	77820	212A	104
10-59297-2	77820	212A		10-81177-1	77820	212A	67
10-59297-2	77820	212A	52	10-81177-2	77820	212A	
10-59297-3		KITS		10-81177-3	77820	212A	
10-59297-3	77820	212A		10-81177-4	77820	212A	
10-59297-3	77820	212A	53	10-81177-5	77820	212A	
10-59299		KITS		10-81177-6	77820	212A	
10-59299	77820	212A	16	10-81177-7	77820	212A	
10-59894	77820	213A	9	10-81177-8	77820	212A	
10-70500-22	77820	213A		10-81177-9	77820	212A	
10-70701-23		KITS		10-81816		KITS	
10-70702-23		KITS		10-81816	77820	212A	150
10-7501		KITS		10-81826		KITS	
10-75515		KITS		10-81826	77820	212A	145
10-75700-1	77820	213		10-81896		KITS	
10-75710	77820	213	8	10-81896	77820	212A	220
10-75710	77820	213B		10-82454	77820	212A	14
10-75715	77820	213A	11	10-82456	77820	212A	15
10-75718	83930	213A		10-82459	77820	212A	19
10-75791		KITS		10-82462		KITS	
10-75791	77820	212A	73	10-82462	77820	212A	159
10-75793		KITS		10-82463	77820	212A	154
10-75793	77820	212A	70	10-82464	77820	212A	64
10-75794		KITS		10-82465	77820	212A	
10-75809	77820	212A	217	10-82466	77820	212A	152
10-75817	77820	212A	221	10-82486		KITS	
10-76591	77820	175		10-82486	77820	212A	117
10-76724		KITS		10-82490-1	77820	213	
10-76759	77820	212A	203	10-82491	77820	213	
10-77386		KITS		10-85900	77820	212A	
10-77386	77820	212A	18	10-85905		KITS	
10-78506-7	77820	213		10-85905	77820	212A	153

REFERENCE NUMBER	MFG CODE	FIG NUMBER	ITEM NUMBER	REFERENCE NUMBER	MFG CODE	FIG NUMBER	ITEM NUMBER
10-85950	77820	212A	151	100314	88818	114R	28
10-85951		KITS		1005429	06840	85	26B
10-85951Y	77820	212A	126	100550	64560	124	
10-85952-1		KITS		100650A	64560	124	
10-85952-1	77820	212A	138	1007097	06840	85	26C
10-85952-2	77820	212A		100710A	64560	124	
10-85952-3	77820	212A		100711A	64560	BULK	
10-85952-4	77820	212A		100951X094-100-112	70898	BULK	
10-85953		KITS		101-4	19315	113E	230
10-85953	77820	212A	128	101-4	19315	113E	238
10-85954	77820	212A		101-4	19315	113E	243
10-85955	77820	212A		1013-38	98708	125A	31
10-88517-5	77820	KITS		1013-39	98708	125A	34
10-88517-5	77820	212A		1013-40	98708	125A	37
10-88518-49	77820	KITS		101330	19315	11D	68
10-88518-49	77820	212A		101330		KITS	
10-88518-52	77820	KITS		1016	98708	132	
10-88518-52	77820	213B		1016-1	98708	132	61A
10-89385-1	77820	213	1	101627-1	88818	114R	11
10-89385-1	77820	213A		101641	81100	113A	67
10-89398	77820	213A	12	101641	88818	114R	8
10-90242-1	77820	213		101658	88818	113A	68
10-90408-3	77820	212A		101658	88818	114R	9
10-90500-5	77820	212A	6	101828	88818	113A	69
10-90500-5	77820	212A	80	101828	88818	114R	52
10-90700-4		KITS		101867	81100	113A	45
10-90700-7		KITS		101867	88818	114R	31
10-90700-9		KITS		102D138-1	73842	162	36
10-90701-5		KITS		102427-00	97803	BULK	
10-90751-19		KITS		102737	81100	113A	85
10-90751-9		KITS		102737	88818	114R	66
10-91464-4		KITS		1028B	80254	28	16
10-91464-4	77820	212A	12	102976		KITS	
10-91464-4	77820	212A	174	102976	06840	BULK	
10-91464-5		KITS		103309	62983	35A	28
10-91464-5	77820	212A	10	10335		KITS	
10-91464-5	77820	212A	164	10335	11599	175H	1
10-91464-5	77820	212A	45	104C9	97485	113B	37
10-91464-5	77820	212A	71	104KSFF	38443	125A	48
10-91464-8		KITS		1041	03678	90	
10-91471-10		KITS		1041-1	98708	125A	
10-91471-10	77820	212A	108	1041-27	98708	125A	35
10-91471-10	77820	212A	82	1041-28	98708	125A	33
10-91471-8		KITS		1041-31		KITS	
10-91471-8	77820	212A	115	1042-17A	06840	138	
10-91471-8	77820	212A	141	1042-17A	06840	139	
10-91471-8	77820	212A	177	104626-58	70138	79B	8
10-91471-8	77820	212A	180	104626-58		KITS	
10-91644-44		KITS		105170-1	88818	113A	63
10-91644-44	77820	212A	24	105170-1	88818	114R	49
10-91675-64		KITS		105170-2	88818	113A	
10-91675-64	77820	212A		105170-2	88818	114R	
10-91675-64	77820	212A	209	105170-3	88818	113A	
10-94500-2	77820	183A	21	105170-3	88818	114R	
10-94500-2	77820	212A		105170-4	88818	113A	
10-948Z		KITS		105170-4	88818	114R	
10-948Z	77820	212A	205	10540	19315	11D	57
10-9943		KITS		10540		KITS	
10-9943	77820	212A	130	105470	88818	114R	61
10C36	89513	123		105470	81100	113A	72
10JX52	56289	137	2	105470	81100	113A	80
10JX52	56289	137	22	105470	81100	114R	55
10JX52	56289	137	32	106083		KITS	
100V4B	29666	45	56	1062495		KITS	
100V4C	29666	BULK		1063998		KITS	
100V4E	29666	45	58	106497		KITS	
100V5H	29666	160	19	1066034		KITS	
100094B	64560	124		107011	81100	113A	9
1002L	45225	A23	6	107117	81100	113A	81
100314	81100	113A	42	107117	81100	114R	64
100314	88818	114R	26	107167	81100	113A	84

REFERENCE NUMBER	MFG CODE	FIG NUMBER	ITEM NUMBER	REFERENCE NUMBER	MFG CODE	FIG NUMBER	ITEM NUMBER
107167	88818	114R	67	11M700	76301	BULK	
107583	81100	113A	93	11X2270	73680	165	53
107583	81100	114R	78	110 1-4	86579	76	
1076423		KITS		110 1-4	86579	76	
107844		KITS		110 1-4	86579	76	
107880-1	81100	113A	78	110 1-4	86579	76	
107880-1	88818	114R	63	110 1-4	86579	81	
107880-2	81100	113A	79	110-8		KITS	
107880-2	88818	114R	62	110-8	86579	17	14
108KS	38443	125A	93	110-8	86579	17	8
108107-1	37695	132		1100905-1		KITS	
108704	81100	113A	77	1101-96-1	83296	113	
108704	88818	114R	60	1101-96-1	83296	114	
108731	88818	113A	56	1101-98-7	97485	113	
108731	88818	114R	42	1101-98-7	97485	114	
109743	81100	113A	92	1101-98-8	72982	113	
109743	88818	114R	76	1101-98-8	72982	114	
109745	81100	113A	91	1101-98-9	72982	113	
109745	88818	114R	75	1101-98-9	72982	114	
109849	81100	113A	86	1102-92-501	83296	113B	53
109849	88818	114R	69	110356	66640	190	56
11	94614	130	6	110356Y1	66640	190	
11		KITS		1104	72914	BULK	
11-1248	77820	E30	2	110400-2SS	81100	113A	51
11-1523	77820	E30	3	110400-2SS	88818	114R	37
11-2601	77820	E30	4	1104007	83298	KITS	
11-3421	77820	E30	5	1104008	83298	KITS	
11-344-75	45681	80		110401-2SS	81100	113A	50
11-3462	77820	E30	6	110401-2SS	88818	114R	36
11-3464	77820	E36	6	110401-6SS	88818	113A	61
11-3695	77820	E31	1	110401-6SS	88818	114R	47
11-3791	77820	E31	2	1104017	83298	11	
11-3880	77820	E31	3	1104017-1	83298	KITS	
11-3905	77820	E94	2	1104017-1	83298	11	
11-4011	77820	E36	7	1104060	83298	138	
11-4149	77820	E36	8	1104060	83298	139	
11-7205	79318	114H		1104060	83298	KITS	
11-7205	79318	114J		110424	66640	205	3
11-7206	79318	114J	13	110428	66640	208	55
11-7206	79318	114G	14	110429	66640	208	53
11-7206	79318	114H	16	110433	66640	208	56
11-7213-1	79318	114G	17	1105650	19315	11D	14
11-7213-1	79318	114H	19	1105650		KITS	
11-7213-1	79318	114J	16	110567	66640	208	23
11-7213-2	79318	114G		1106-21	83296	113B	26
11-7217-1	79318	114G		1106-22	83296	113B	76
11-7217-2	79318	114G		11060	99643	104	
11-7231	79318	114G	82	110722		KITS	
11-7231	79318	114H	82	110722	19315	11D	61
11-7231	79318	114J	68	110758	81100	113A	31
11-7302	79318	114G	50	111		KITS	
11-7302	79318	114H	51	1111-517703	92003	79	
11-7302	79318	114J	39	1111-517703	92003	80	64
11-7304	79318	114G	51	1111-517703	92003	81	48
11-7304	79318	114H	52	1111-517706	92003	77	40
11-7304	79318	114J	40	1111-517706	92003	77	45
11-7305	79318	114G	79	111203	66640	188	15
11-7307	79318	114G	78	111203Y1	66640	188	
11-7324	79318	114G	104	111203Y2	66640	188	
11-7324	79318	114H	99	111203Y3	66640	188	
11-7324	79318	114J	84	1112266		KITS	
11-7331	79318	114G	88	1117-4-2	83296	113B	92
11-7331	79318	114G	98	11190	99643	85	
11-7334-1	79318	114G	89	111998	88818	113A	57
11-7334-1	79318	114H	89	111998	88818	114R	43
11-7334-1	79318	114J	74	112043	66640	201	4
11-7338	79318	114G	86	1122	79570	208	46
11-7338	79318	114G	96	11223-50	75287	32	207
11-7353	79318	114G	70	11223-50	75287	144	122
11C30	58588	123	75	11223-50	75287	145	185
11C30	58588	123A		112288	88818	113A	54

REFERENCE NUMBER	MFG CODE	FIG NUMBER	ITEM NUMBER	REFERENCE NUMBER	MFG CODE	FIG NUMBER	ITEM NUMBER
112288	88818	114R	40	115458Y23	66640	201	
112341	88818	113A	55	115458Y24	66640	201	
112341	88818	114R	41	115458Y25	66640	201	
112403	66640	200	52	115458Y26	66640	201	
112883	66640	191	26	115458Y3	66640	201	
112883	66640	191	7	115458Y4	66640	201	
112953	81100	113A	87	115458Y5	66640	201	
112953	81100	114R	70	115458Y6	66640	201	
112989	66640	208	54	115458Y7	66640	201	
113X27R		KITS		115458Y8	66640	201	
113X27R	76260	19	26	115458Y9	66640	201	
113148	66640	199	1	115459	66640	201	10
113191	66640	203	4	11558		KITS	
113191Y2	66640	203		11558	19315	175A	23
113255	66640	187	6	115798	81100	113A	20
113255Y1	66640	187		115803	81100	113A	21
113255Y2	66640	187		115804	81100	113A	19
113340	66640	205	21	115805	81100	113A	11
113394	66640	191	27	115896	66640	208	52
113394	66640	191	8	115946	66640	208	42
113394	66640	195	16	116077	81100	113A	22
113394	66640	196	9	116078	81100	113A	46
113394	66640	197	9	116078	88818	114R	32
113442	66640	203	2	116172	66640	201	15
113442	66640	204	13	116268	66640	187	34
113442	66640	205	5	1162967	79500	114	
11371	71643	41		116334	66640	187	43
113960	66640	205	2	116338	66640	187	33
1142	84685	KITS		116343	66640	187	42
1142	84685	104A		116417	66640	187	37
1143	84685	KITS		116420	66640	187	11
1143	84685	104A		116420Y1	66640	187	
114644	66640	208		116420Y2	66640	187	
114858	66640	207		116508	81100	113A	47
114859	19315	11D	10	116508	88818	114R	33
114859		KITS		116509	81100	113A	29
115-00619-8445	96906	133		116510	81100	113A	30
11500206	19315	113E	68	116774	66640	198	20
11500206	19315	113E	75	116798	66640	200	
11510	77220	E31	4	116964	66640	211	23
115171	66640	188	4	117S2		KITS	
115234	88818	113A	58	117204	77932	42	6
115234	88818	114R	44	117205	77932	42	4
115309	66640	190		11751-1	71468	140	
115309Y1	66640	190		11751-1	71468	141	6
115309Y2	66640	190	20	11751-1	71468	BULK	
115309Y3	66640	190		117547	66640	188	38
115309Y4	66640	190		117547Y1	66640	188	
115309Y5	66640	190		117547Y10	66640	188	
115351	81100	113A	44	117547Y100	66640	188	
115365	81100	113A	23	117547Y12	66640	188	
115368	81100	113A	15	117547Y2	66640	188	
115368	88818	114R	13	117547Y20	66640	188	
115369	81100	113A	16	117547Y22	66640	188	
115458	66640	201	8	117547Y24	66640	188	
115458	66640	BULK		117547Y3	66640	188	
115458Y1	66640	201		117547Y30	66640	188	
115458Y10	66640	201		117547Y32	66640	188	
115458Y11	66640	201		117547Y4	66640	188	
115458Y12	66640	201		117547Y40	66640	188	
115458Y13	66640	201		117547Y44	66640	188	
115458Y14	66640	201		117547Y45	66640	188	
115458Y15	66640	201		117547Y5	66640	188	
115458Y16	66640	201		117547Y6	66640	188	
115458Y17	66640	201		117547Y60	66640	188	
115458Y18	66640	201		117547Y64	66640	188	
115458Y19	66640	201		117547Y90	66640	188	
115458Y2	66640	201		117810	88818	113A	74
115458Y20	66640	201		117810	88818	114R	57
115458Y21	66640	201		117812	66640	211	22
115458Y22	66640	201		118D7	66640	184	

REFERENCE NUMBER	MFG CODE	FIG NUMBER	ITEM NUMBER	REFERENCE NUMBER	MFG CODE	FIG NUMBER	ITEM NUMBER
118J21	66640	200		1238953-2	19315	113E	102
118J7	66640	184		124D107	66640	187	36
118S21	66640	200		124D118	66640	208	76
11826		KITS		124D223	66640	187	21
118421	66640	200		124D83	66640	208	7
1185-4X3/4	78286	21		124D95	80044	BULK	
1185-5C	66640	190	32	1240355-1	19315	113E	162
118529	88818	114R	15	1240579-1	19315	113E	80
118536	88818	114R	24	1240580-1	19315	113E	
118537	88818	114R	14	1240581-1	19315	113E	159
118545	88818	114R		1240582-1	19315	113E	157
118862	66640	198	25	1240583-1	19315	113E	163
118954	88818	114R	10	1240590-6	19315	113E	
12-7216	79318	114G	19	1240946-3	19315	113E	100
12-7217	79318	114H		1240947-2	19315	113E	40
12-7220	79318	114H	11	1240983-1	19315	113E	
12-7222	79318	114H		1240988-1	19315	113E	107
12C60		KITS		1242118-3	19315	113E	229
12C60	89513	123A	3	1242118-4	19315	113E	237
120315N2	66640	187	4	1242119-1	19315	113E	206
120350	66640	200	13	1242119-1	19315	113E	232
120368	66640	201	3	1242419-1	19315	113E	
120578-2	88818	113A	65	1243001-1	19315	113E	161
120578-2	88818	114R	50	1243004-1	19315	113E	
1206-17-1	83296	113B	55	1243009-1	19315	113E	72
120796	81100	113A		1243071-1	19315	113E	
120824		KITS		1245746-1	19315	113E	90
1209290-2	19315	113E	272	125-0625LBS	02108	123	16
120930	66640	200		1250000-1	19315	113E	208
121064	00736	170	43	125115		KITS	
1214901-1	19315	113E	273	125116		KITS	
1216-10-1	83296	113B	1	1251381-1	19315	113E	204
1216297-1	19315	113E		1251381-1	19315	113E	234
1217-8-1	83296	113B	58	1251385-1	19315	113E	49
1217283-1	19315	113E	28	1251386-1	19315	113E	125
1217284-1	19315	113E	27	1251393-1	19315	113E	63
1219270-12	19315	113E	7	1251397-1	19315	113E	51
1222705-1	19315	113E	130	125145		KITS	
1222707-1	19315	113E	25	1251767-1	19315	113E	174
1222708-2	19315	113E	126	1251768-1	19315	113E	259
1224709-1	19315	113E	124	1251769-1	19315	113E	254
1224710-1	19315	113E	123	1251770-1	19315	113E	101
1225368-1	19315	113E	66	125439	65092	113	
1225369-1	19315	113E		125439	65092	114	
1225370-1	19315	113E		1260302-1	19315	113E	
1227-1-116	82423	113E	168	1260303-1	19315	113E	
1227-1-116	82423	113E	60	126090		KITS	
122726	19315	175A	95	126102N13	66640	190	
1228-041040	89944	77		126102N23	66640	190	17
1228997-1	19315	113E	176	126102N48	66640	190	
123194		KITS		126165		KITS	
123194	19315	175A	99	126280	66640	208	24
1235962-1	19315	113E		126285	66640	208	21
1235962-2	19315	113E		126288	66640	190A	39
1235962-3	19315	113E		1265123-1	19315	113E	
1235962-4	19315	113E		126644	66640	208	1
1235962-5	19315	113E		126705	66640	203	10
1235962-6	19315	113E		126739		KITS	
1235962-7	19315	113E		126743		KITS	
1235962-8	19315	113E		126744		KITS	
1235962-9	19315	113E		126833		KITS	
123684		KITS		126833	19315	175A	82
123684	19315	175A	111	126838	19315	175A	13
123685		KITS		126839	19315	175A	11
123685	19315	175A	110	126845	19315	175A	58
1238944-1	19315	113E	108	126848		KITS	
1238945-1	19315	113E	96	126848	19315	175A	56
1238946-1	19315	113E	105	126851		KITS	
1238948-1	19315	113E	103	126851	19315	175A	49
1238950-1	19315	113E	99	126856		KITS	
1238951-1	19315	113E	42	126856	19315	175A	5

REFERENCE NUMBER	MFG CODE	FIG NUMBER	ITEM NUMBER	REFERENCE NUMBER	MFG CODE	FIG NUMBER	TEM NUMBER
127527	66640	201	17	13J35	66640	206	
127533	66640	187	26	13J35	66640	207	
127536Y3	66640	190		13J35	66640	208	
127536Y4	66640	190		13J55	66640	202A	
127536Y5	66640	190		13J6	66640	205	
127552	66640	187	27	13S35	66640	184	
127552Y1	66640	187		13S35	66640	199	
127552Y14	66640	187		13S35	66640	206	
127552Y2	66640	187		13S35	66640	207	
127552Y6	66640	187		13S35	66640	208	
127552Y8	66640	187		13S55	66640	202A	
127746	66640	208	80	13S6	66640	205	
127747N1	66640	208	63	130D100	66640	209	5
127794		KITS		13022-1	71468	115	55
127795		KITS		130246	66640	190	13
127988	66640	198	32	130299		KITS	
128061	66640	201	11	130299	19315	175A	88
128258	66640	188	17	130343	66640	190A	29
128259	66640	188		130344	66640	190A	28
128259Y1	66640	188		130387	66640	208	73
128261	66640	188		130388	66640	208	70
128262	66640	188	8	130389	66640	208	71
128308	65092	113		130413	66640	190	
128308	65092	114		130415		KITS	
129157	66640	188	13	130415	19315	11D	9
129157	66640	188	20	130568	66640	208	64
129158	66640	188	12	130571	66640	190	3
129158	66640	188	19	130587	19315	175A	115
129159	66640	188	14	130597	19315	175A	120
129159	66640	188	21	131049	66640	190A	37
129181	66640	187	10	1311-532454	45681	78	40
129181Y1	66640	187		1311-532454	45681	78A	
129181Y2	66640	187		131219		KITS	
129386	66640	203	13	131219	19315	175A	15
129387	66640	203	14	131221		KITS	
129457	66640	207	23	131221	19315	175A	14
1296-5-0193	89944	113		131222		KITS	
1297794P1	24446	114P	61	131222	19315	175A	16
1297794P1	24446	114P	63	131223		KITS	
1297794P1	24446	114P	65	131223	19315	175A	17
1297794P1	24446	114Q	43	131224		KITS	
1297794P1	24446	114Q	45	131224	19315	175A	119
129802		KITS		131229	99551	175A	117
129802	19315	175A	105	131265	19315	175A	107
129992Y2	66640	190		131266		KITS	
129992Y3	66640	190	19	131266	19315	175A	108
129992Y4	66640	190		131274	19315	175A	36
129992Y5	66640	190		131286	99551	175A	28
129992Y6	66640	190		131422	66640	190A	40
13C73	58588	123A	32	131717	66640	190A	30
13C74	58588	123A	19	131718	66640	190A	31
13C83	89513	123A	36	1318	09292	16	2
13C86	58588	123A	38	131867	66640	189	
13C87	58588	123A	37	1319	87187	MSUP	
13C88	89513	123A		132303	66640	190	29
13C92	58588	123A	33	132365N72	66640	194	4
13C95	58588	123A	18	132365N73	66640	192	
13C99	58588	123A	25	132365N76	66640	191	
13D14	66640	184	32	132365N77	66640	192	
13D38	66640	190	24	132365N82	66640	192	15
13D55	66640	202A	18	132365N82	66640	193	14
13D6	66640	205		1325047	19315	11D	
13H35	66640	184		132702	65092	113	
13H35	66640	199		132702	65092	114	
13H35	66640	206		132875	65092	113	
13H35	66640	207		132875	65092	114	
13H35	66640	208		1330217	19315	11D	
13H55	66640	202A		133068	66640	185	13
13H6	66640	205	25	133573	66640	191	12
13J35	66640	184		133573	66640	191	31
13J35	66640	199		133573	66640	195	13

REFERENCE NUMBER	MFG CODE	FIG NUMBER	ITEM NUMBER	REFERENCE NUMBER	MFG CODE	FIG NUMBER	ITEM NUMBER
1338-89A		KITS		137340	66640	187	22
1338-90C	07166	139		137460	66640	202A	5
1338-91C	07166	139		137626	66640	187	12
1338-91C	07166	KITS		137660	65092	113	
133973	66640	206	29	137660	65092	114	
134AV10528-7	26512	43		137766	66640	204	8
134007	66640	206	30	137768	66640	203	5
1343		KITS		137793	66640	200	
1343	87915	175B	23	138003	66640	209	
134339	66640	207	50	138043	66640	190A	26
134340	66640	207	49	138075	66640	198	30
134341	66640	207	48	138233	66640	191	19
134342	66640	207	47	138233	66640	191	35
134556	66640	200		138383	66640	210	2
134559	66640	200		138463	66640	190	28
134733	66640	207	32	138543	66640	207	
134827	66640	188	28	138697	66640	190	15
134899	66640	187	17	138732N2	66640	201	1
134909	66640	187		138733	66640	190	
134955	66640	199		138750	66640	203	15
134956N1	66640	199	15	138753	66640	205	8
135014	66640	187	25	138800	66640	187	18
135189	66640	190A	42	138804	66640	204	15
135189Y2	66640	190A		138804	66640	205	7
135251		KITS		138804Y1	66640	205	
135657	66640	190A	25	138804Y2	66640	204	
136D20	66640	187	2	138804Y2	66640	205	
136085N1	66640	208	6	138825	66640	205	24
13620	79318	114J	15	138845	66640	206	28
13620	79318	114G	16	138859	66640	198	18
13620	79318	114H	18	138861	66640	190	61
13623	79318	114J	14	138862	66640	206	22
13623	79318	114G	15	138862Y1	66640	206	
13623	79318	114H	17	138862Y2	66640	206	
13623-1	79318	114G		138870	66640	206	23
136248	66640	188		138870Y2	66640	206	
136263	66640	207	40	138870Y3	66640	206	
1363MODEL16STYLEC	06840	175		138873	66640	208	74
136308	66640	209	4	138874	66640	190A	
136313	66640	190A	11	138875	66640	190A	
136358	66640	210	24	138879	66640	208	78
136358	66640	210	3	13889-13830	60038	165	31B
136361	66640	210	14	13889CP	60038	165	31A
136363	66640	210	15	138893	66640	207	35
136364	66640	210	17	138894	66640	207	36
1364-109C8		KITS		138895	66640	207	37
136459	66640	190A	36	138896	66640	190	58
136460	66640	190A	34	138896	66640	207	11
136570N1	66640	208	68	138896Y1	66640	190	
136571	66640	208	50	138896Y1	66640	207	
136572	66640	208	47	138898	66640	207	30
136573	66640	208	48	138912	66640	187	30
136574	66640	208	45	138912Y1	66640	187	
136576N1	66640	208	36	138912Y2	66640	187	
136578	66640	208	49	138912Y3	66640	187	
136579N1	66640	208	65	138916N1	66640	207	31
136580	66640	208	69	138919	66640	207	26
136585N1	66640	208	44	138931	66640	207	
136659	66640	208	35	138941	66640	210	1
136659	66640	208	41	138942	66640	190	57
136659Y1	66640	208		138942	66640	198	36
136659Y3	66640	208		138964	66640	186	14
136659Y4	66640	208		138983	66640	204	4
136739	66640	210		138985	66640	199	9
136740	66640	210		139049	66640	190	
136770	66640	198	26	139070	66640	191	
13683	79318	114G	8	139079	66640	200	4
13683	79318	114H	9	139079Y1	66640	200	
13683	79318	114J	7	139090	66640	194	
137046	66640	206	45	139091	66640	194	
137339	66640	187	19	139092	66640	194	10

REFERENCE NUMBER	MFG CODE	FIG NUMBER	ITEM NUMBER	REFERENCE NUMBER	MFG CODE	FIG NUMBER	ITEM NUMBER
139142	66640	191	33	14022	84685	A24	2
139143	66640	191	17	1416-122J	06840	175	
139150	66640	206	50	1416-122J	19315	175A	
139152	66640	190A	14	1416-16B	19315	175	
139153	66640	190A	15	1416-42F	06840	175	
139155Y4	66640	190		1416-42F	19315	175A	
139155Y5	66640	190		1416-42G	19315	175	
139165	66640	210	26	1416-42G	19315	175A	
139165	66640	210	5	1416-42J	19315	175	
139166	66640	210	19	1416-42J	19315	175A	
139199	66640	200	30	1416-62F	06840	175	
139213N1	66640	190		1416-82G	19315	175A	
139226	66640	190		14204	11599	175H	12
139226Y1	66640	190		145185	66640	200	
139226Y2	66640	190	25	1452-048	72962	56	65
139226Y3	66640	190		145206	66640	199	11
139226Y4	66640	190		145206Y10	66640	199	
139226Y5	66640	190		145206Y14	66640	199	
139300	66640	187	24	145206Y16	66640	199	
139301	66640	187	29	145206Y17	66640	199	
139353	66640	188	26	145206Y18	66640	199	
139437	66640	194	6	145206Y19	66640	199	
139449	66640	192	18	145206Y20	66640	199	
139449	66640	193	17	145206Y21	66640	199	
139452	66640	192		145206Y22	66640	199	
139452	66640	193		145206Y23	66640	199	
139464	66640	196	7	145206Y24	66640	199	
139464	66640	197	7	145206Y25	66640	199	
139465	66640	191	15	145206Y26	66640	199	
139467	66640	191	9	145206Y26	66640	BULK	
139479	66640	191	28	145206Y28	66640	199	
139539	66640	199	10	145206Y3	66640	199	
139539	66640	199	4	145206Y32	66640	199	
139539Y1	66640	199		145206Y5	66640	199	
139539Y10	66640	199		145206Y6	66640	199	
139539Y11	66640	199		145206Y7	66640	199	
139539Y12	66640	199		145206Y8	66640	199	
139539Y2	66640	199		145206Y9	66640	199	
139539Y20	66640	199		145224	66640	200	10
139539Y21	66640	199		145225	66640	200	11
139539Y22	66640	199		145360	66640	210	
139582	66640	210		145581	66640	200	39
139619	66640	190		145587	66640	185	4
139619Y3	66640	190		145588	66640	185	6
139619Y6	66640	190		145629	66640	192	4
139619Y7	66640	190		145629	66640	193	6
139844	66640	200	38	145630	66640	192	23
139869	66640	200		145630	66640	193	22
14C00	58588	123A		145631	66640	192	22
14C01	58588	123A	29	145631	66640	193	21
14C03	58588	123A	43	145632	66640	192	26
14C07	58588	123A	30	145632	66640	193	25
14C08	58588	123A	21	145633N1	66640	192	13
14C09	58588	123A		145633N1	66640	193	12
14C14	58588	123A		145633N2	66640	192	14
14C17	58588	123A	2	145633N2	66640	193	13
14C18	58588	123A	5	145633N3	66640	191	14
14C19	58588	123A	11	145633N4	66640	195	15
14C20	58588	123A	14	145769	66640	210	
14C23		KITS		145770	66640	210	
14P1	82146	MSUP		145772	66640	210	
140-58228	43999	49	63	145773	66640	210	
140-58228	43999	49	66	145902	66640	190A	22
140-58228	43999	49	79	145985	66640	190	14
140-58228	43999	49	82	14602-1JA1	06840	113	
140-58228	43999	50	29	14602-1JA1	06840	114	
140-58228	43999	50	33	14602-1JA1	19315	113E	
140-58228	43999	50	36	14602-1JA1M	19315	113	
140-58228	43999	50	39	14602-1JA1M	19315	114	
140-58228	78286	79	140	14602-1JB1	19315	113	
14015		KITS		14602-1JB1	19315	114	

REFERENCE NUMBER	MFG CODE	FIG NUMBER	ITEM NUMBER	REFERENCE NUMBER	MFG CODE	FIG NUMBER	ITEM NUMBER
14602-1JB1	19315	113E		147641Y25	66640	188	
14602-1JB1M	06840	113		147641Y8	66640	188	
14602-1JB1M	06840	114		147690	66640	206	24
14602-1JC1	19315	113		147690Y1	66640	206	
14602-1JC1	19315	114		147690Y2	66640	206	
14602-1JC1	19315	113E		147781	66640	188	11
14602-1JD1	19315	113		147781	66640	201	18
14602-1JD1	19315	114		147817	66640	190	46
14602-1JD1	19315	113E		147839	66640	195	
14602-1JE1	19315	113		147846	66640	188	48
14602-1JE1	19315	114		147846Y1	66640	188	
14602-1JE1	19315	113E		147846Y10	66640	188	
14602-1JF1	19315	113		147846Y11	66640	188	
14602-1JF1	19315	114		147846Y12	66640	188	
14602-1JF1	19315	113E		147846Y13	66640	188	
14602-1JK1	06840	113		147846Y2	66640	188	
14602-1JK1	06840	114		147846Y20	66640	188	
146021JKI	19315	113		147846Y3	66640	188	
146021JK1	19315	114		147846Y4	66640	188	
14607-1SA1	19315	113		147846Y5	66640	188	
14607-1SA1	19315	114		147846Y6	66640	188	
14613-1AKA4	06840	113		147848	66640	188	43
14613-1AKA4	06840	114		147862	66640	190A	18
14613-1AK4	19315	113E		147864	66640	190A	19
146209	66640	190	44	147977	66640	208	
146439		KITS		147978	66640	208	
146473	66640	188		147998	66640	194	9
146473Y1	66640	188		147999	66640	194	7
146484	66640	190A	35	148018	66640	207	16
146553	66640	210		148019	66640	207	17
146565	66640	202A	8	148021	66640	207	15
146568	66640	199	16	148027	66640	199	
146571	66640	202A		148028	66640	199	6
146573	66640	199	14	148121	66640	191	37
146763	66640	187	31	148157	66640	206	
146806	66640	190		148234	66640	190	
146806Y1	66640	190		148235	66640	190	
147B13A	35918	113		148298	66640	189	
147B13A	35918	114		148300	66640	189	
147B30	35918	113		148300Y1	66640	189	
147B30	35918	114		148300Y2	66640	189	
147B30A	35918	113		148302	66640	188	
147B30A	35918	114		148303	66640	188	
147B7	35913	113		148308	66640	188	
147B7	35918	114		148309	66640	188	
147B7A	35918	113		148363	66640	199	8
147B7A	35918	114		148431Y3	66640	190	23
147090	66640	198	13	148431Y4	66640	190	
147106N13	66640	202A	7	148431Y5	66640	190	
147109	66640	190A		148431Y6	66640	190	
147183	66640	190	47	148636N1	66640	198	
147250	66640	204	10	148636N2	66640	198	
147401		KITS		148858	66640	214	4
147445	66640	205	17	148913	66640	202A	9
147470	66640	190		148914	66640	202A	10
147583	66640	200	45	148950	66640	188	2
147637	66640	190	42	148966	66640	208	
147637Y1	66640	190		149-120	33918	BULK	
147637Y2	66640	190		149035	66640	211	
147637Y3	66640	190		149035	66640	183A	
147637Y4	66640	190		149108	66640	211	
147637Y5	66640	190		149119	66640	188	
147637Y6	66640	190		149119Y1	66640	188	18
147637Y7	66640	190		149119Y1	66640	190	39
147637Y8	66640	190		149119Y2	66640	188	
147637Y9	66640	190		149119Y3	66640	188	
147641	66640	188	39	149119Y4	66640	188	
147641Y1	66640	188		149119Y5	66640	188	
147641Y11	66640	188		149149C	66640	188	33
147641Y16	66640	188		149173	66640	214	
147641Y2	66640	188		149195	66640	190A	

REFERENCE NUMBER	MFG CODE	FIG NUMBER	ITEM NUMBER	REFERENCE NUMBER	MFG CODE	FIG NUMBER	ITEM NUMBER
149210	66640	189	7	155S5-12D	00624	84	
149210Y1	66640	189		155S5-8D	00624	144	2
149210Y2	66640	189		155S5-8D	00624	145	8
149217	66640	211		155S5-8D	00624	181	22
149217	66640	183A		15505	23108	39	20
149292	66640	188		15519-10D	00624	32	168
1493		KITS		1556D	00624	181	25
1493	87915	175B	8	1558-041044	89944	113	
149347	66640	188		1560EG006	81996	41	
149348	66640	188		1560EG006	81996	K2A	
149349	66640	188		1560EG006	81996	KITS	
149350	66640	188		1560H34-091-3	81996	82	62
149351	66640	188		157-10D	00624	32	
149352	66640	188		157-6D	00624	32	129
149353	66640	188		157-8D	00624	32	155
149354	66640	188		157-8D	00624	32	26
149358	66640	188	27	157-8D	00624	32	33
149416	66640	190A	41	157-8D	00624	32	51
149453	66640	190	45	15700	81100	113	
149458	66640	190A	21	15700	81100	114	
14946	81708	85		15700	81100	113A	
1495	24446	113		1584-6	90166	181A	
1495	24446	114		1589-1B	06840	138	
14981	66640	206		1589-1B	06840	139	
15-69	83296	113B	9	1589-1C	06840	138	
150-666104-10-0170	00624	129	28	1589-1C	06840	139	
150-666104-10-0170	00624	181		1589-1C	19315	138	
150S1-10D	00624	83		1589-1C	19315	139	
150S1-12	00624	83		1589-1D	06840	138	
150S1-4	00624	110	13	1589-1D	06840	139	
150S1-4D	00624	BULK		1592C3	51240	109	
1511	09292	200	13	1604-178	65301	113E	6
15153		KITS		1604-188	19315	113A	1
151617	70210	74		1604-188	79555	114R	1
151626		KITS		1604-73		KITS	
151627-1		KITS		1604-73	73842	84A	
151627-2		KITS		1604-81		KITS	
151634		KITS		1604-81	93460	157	48
153782	70210	74		1618		KITS	
15465-5D	70843	141	30	16187-417	71286	130	77
155-10	00624	83	4	16187-417	71286	130	79
155-10	00624	84	5	16187-417	71286	130	83
155-10	00624	181	11	162-0251-873	99485	113	23A
155-12D	00624	83	8	162-0251-873	97485	114	28A
155-12D	00624	84	10	162-0251-873	83296	113B	
155-4D	00624	BULK		162-1021	97485	113B	116
155-8D	00624	181	18	162-1023	83296	113B	117
155D156	66640	188		162-1082	97485	113B	115
155D157	38443	188		162-1083	83296	113B	118
155D250	66640	188	5	162-114-873	83296	113B	12
155D251	66640	188		162-1455	97485	113B	104
155D251	66640	188	1	162-173	83296	113B	11
155S11-12D	70128	BULK		162-1869	83296	113B	126
155S4-10D	00624	83		162-1899	83296	113B	50
155S4-10D	00624	84		162-1901	83296	113B	45
155S4-10D	00624	181	13	162-1903	83296	113B	60
155S4-12D	00624	83		162-1904	83296	113B	49
155S4-12D	00624	84		162-1905	83296	113B	48
155S4-4D	00624	54	25	162-1909	83296	113B	65
155S4-4D	00624	54	50	162-1910	97485	113B	61
155S4-4S	00624	54		162-1912	83296	113B	62
155S4-4S	00624	167	18	162-1913	97485	113B	54
155S4-6	00624	BULK		162-1918	97485	113B	19
155S4-6D	00624	181	27	162-1923-873	83296	113B	15
155S4-8D	00624	181		162-1924	83296	113B	34
155S5-10D	00624	83		162-1928	83296	113B	108
155S5-10D	00624	84		162-1929	83296	113B	124
155S5-10D	00624	144	8	162-1930	83296	113B	123
155S5-10D	00624	145	5	162-1931	83296	113B	122
155S5-10D	00624	181	15	162-1932	83296	113B	110
155S5-12D	00624	83		162-1933	83296	113B	121

REFERENCE NUMBER	MFG CODE	FIG NUMBER	ITEM NUMBER	REFERENCE NUMBER	MFG CODE	FIG NUMBER	ITEM NUMBER
162-1935	83296	113B	113	1636-6GB1	06840	114	
162-1937	83296	113B	106	1636-6GB1	19315	114S	
162-1938	83296	113B	30	1636-6HB1	19315	113	
162-2091	83296	113B	75	1636-6HB1	19315	114	
162-2092	83296	113B	125	1636-6HB1	19315	114S	
162-2093	83296	113B	100	1636-6KB1	19315	113	
162-2095	83296	113B	95	1636-6KB1	19315	114	
162-2096	83296	113B	97	1636-6KB1	19315	114S	
162-2097	83296	113B	27	1636-6MB2	19315	113	
162-2098	83296	113B	21	1636-6MB2	19315	114	
162-2099	97485	113B	10	1636-6MB2	19315	114S	
162-2101	97485	113B	29	164-158	83296	113B	36
162-2102	83296	113B	20	164-79	83296	132	
162-2103	83296	113B	91	1645-6MA1	19315	113	
162-2104	83296	113B	74	1645-6MA1	19315	114	
162-2105	83296	113B	70	1648-6UA6-1	19315	113	
162-2106	83296	113B	18	1648-6UA6-1	19315	114	
162-2116-873	83296	113B	7	165-0460-1592A	83296	80	70
162-2118-344	83296	113B	8	165-0460-1592B	97485	80	
162-2125	83296	113B	101	165-0460-1593A	83296	81	53
162-2126	83296	113B	94	165-0461-1443	83296	81	
162-2171	83296	113B	78	165-0461-1478A	83296	79	
162-321	83296	113B	119	165-0461-1478B	97485	79	
162-330	97485	113B	120	165-2460-1593B	97485	81	
162-338	83296	113B	14	1655-65148-3	78286	130	
162-363	83296	113B	46	1670-10526-17	78286	F2	
162-574	83296	113B	64	1680CH34-024-3	81996	115	
162-90	83296	113B	13	1686		KITS	
162B3A	06840	113		1686	90166	181A	
162B3A	06840	114		169-08A19	83296	113	18A
162540	56232	113F	103	169-08A19	83296	114	25A
163-0511-1	97485	137		169-32-113	83296	113	
163-0511-1	97485	137	12	169-32-113	83296	114	
163-0511-1	97485	137	19	169-49	83296	113	
163-0511-1	97485	137	25	169-49	83296	114	
163-0511-1	97485	137	29	169-55	83296	113	
163-0511-1	97485	137	36	169-55	83296	114	
163-0512-3	97485	137		169-56	83296	113	
163-0512-3	97485	137	16	169-56	83296	114	
163-0513-3	97485	137		170026	66640	204	5
163-0514-3	97485	137		170037	66640	186	8
163-0531	97485	79	31	170041	66640	184	36
163-0531	98745	79	43	170043	66640	186	7
163-0531	97485	80	37	170048	66640	201	9
163-0531	97485	81	26	170051	66640	184	2
163-0532	97485	79	32	170077	66640	188	44
163-0532	98745	79	44	170077Y1	66640	188	
163-0532	97485	80	38	170077Y2	66640	188	
163-0532	97485	81	27	170077Y3	66640	188	
163-0533	97485	79	33	170077Y4	66640	188	
163-0533	97485	80	39	170077Y5	66640	188	
163-0533	97485	81	28	170090	66640	188	42
163-0534	77272	79	34	170116	66640	188	30
163-0534	97485	80	40	170216	66640	207	27
163-0534	77272	81	29	170227	66640	190A	12
163-0551	97485	137	13	170244	66640	207	24
163-0551	97485	137	20	170250	66640	201	19
163-0551	97485	137	30	170250	66640	206	27
163-0552	97485	137	8	170250Y1	66640	206	
163-418	97485	113B	57	170250Y10	66640	206	
163-427	83296	113B	56	170250Y11	66640	206	
163D62	66640	215		170250Y12	66640	206	
163D86	66640	198	27	170250Y14	66640	206	
1630U4-03	89944	109		170250Y15	66640	206	
1630U4-04	89944	109		170250Y2	66640	206	
1630X4-03	89944	109		170250Y3	66640	206	
1636-6AA1	19315	113		170251	66640	206	
1636-6AA1	19315	114		170263	66640	190	27
1636-6AB1	19315	113		170268	66640	190A	17
1636-6AB1	19315	114S		170426	66640	192	17
1636-6GB1	06840	113		170426	66640	193	16

REFERENCE NUMBER	MFG CODE	FIG NUMBER	ITEM NUMBER	REFERENCE NUMBER	MFG CODE	FIG NUMBER	ITEM NUMBER
170457	66640	205	11	171738	66640	210	
170467	66640	187	14	171744	66640	210	
170470	66640	205	16	171749	66640	196	6
170473N1	66640	190		171756	66640	184	8
170473N2	66640	190		171758	66640	185	8
170473N3	66640	190		171760	66640	197	4
170474N1	66640	190		171761	66640	197	6
170474N11	66640	190		171762	66640	196	4
170474N2	66640	190		171764	66640	210	33
170474N3	66640	190		171766	66640	210	12
170474N7	66640	190		171771	66640	204	
170474N8	66640	190		171772	66640	204	9
170493	66640	209		171773	66640	204	16
170537	66640	208	28	171774	66640	200	7
170588	66640	207		171774Y2	66640	200	
170623	66640	209		171781	66640	202A	17
1709A1-3	75361	75		171787	66640	206	80
170947	66640	187	5	171788	66640	206	77
170948	66640	189	8	171789	66640	206	74
170949	66640	198	4	171791	66640	206	73
171024	66640	192	21	171795	66640	215	2
171024	66640	193	20	171796	66640	207	18
171030	66640	190	16	171797	66640	187	45
171093	66640	200		171798	66640	210	
171163	66640	190A	16	171799	66640	187	46
171302	66640	202A	3	171800	66640	206	70
171407	66640	192	10	171801	66640	210	8
171413	66640	188	41	171804	66640	190	62
171445	66640	188	16	171805	66640	195	4
171445	66640	188	23	171806	66640	195	9
171446	66640	188		171811	66640	195	5
171475	66640	190		171812	66640	195	10
171475	66640	190	22	171818	66640	206	44
171476Y11	66640	190		171906	66640	190	18
171476Y2	66640	190		171907	66640	190	30
171476Y3	66640	190	21	171907Y1	66640	190	
171476Y4	66640	190		171907Y2	66640	190	
171476Y5	66640	190		171918	66640	188	22
171476Y6	66640	190		171918Y1	66640	188	
171476Y8	66640	190		171918Y2	66640	188	
171514	66640	187		171918Y3	66640	188	
171514Y1	66640	187		171918Y4	66640	188	
171514Y2	66640	187		171918Y5	66640	188	
171515	66640	187		171918Y6	66640	188	
171704	66640	190	26	171918Y7	66640	188	
171704Y1	66640	190		171918Y8	66640	188	
171704Y2	66640	190		171919	66640	188	24
171704Y3	66640	190		171919Y1	66640	188	
171704Y4	66640	190		171919Y2	66640	188	
171705	66640	185	10	171919Y3	66640	188	
171706	66640	185	9	171923	66640	188	
171707	66640	184		171924	66640	188	
171707Y1	66640	184	34	171925	66640	188	
171707Y2	66640	184		171983	66640	190A	20
171707Y3	66640	184		172-32B		KITS	
171708	66640	210	32	172084	66640	204	1
171709	66640	198	37	17210-1	79318	114G	21
171711	66640	184	44	17210-1	79318	114H	23
171712	66640	210		17210-1	79318	114J	17
171714	66640	210	16	17210-3	79318	114G	
171717	66640	207	5	17210-3	79318	114H	
171719	66640	207		17210-3	79318	114J	
171728	66640	186	13	17221	79318	114G	13
171729	66640	186	5	17221	79318	114H	15
171730	66640	186	10	17221	79318	114J	12
171731	66640	198	3B	17239	02282	114G	47
171732	66640	184	21	17239	02282	114H	48
171733	66640	189		17239	02282	114J	35
171734	66640	185	2A	17240	79318	114G	119
171735	66640	185		17240	79318	114G	48
171736	66640	185		17240	79318	114H	49

REFERENCE NUMBER	MFG CODE	FIG NUMBER	ITEM NUMBER	REFERENCE NUMBER	MFG CODE	FIG NUMBER	ITEM NUMBER
17240	79318	114J	36	1845X4-03D	89944	114	
17244	79318	114G	71	1845X4-03D	89944	114A	
17244	79318	114H	71	1846-3	89944	114L	54
17244	02282	114J	57	184875	56232	113F	116
17245	79318	114G	72	184875	56232	113F	36
17245	79318	114H	72	184875	56232	113F	9
17245	79318	114J	58	18520	88818	114	
17252	79318	114G	34	18520	88818	114R	
17252	79318	114H	35	187406		KITS	
17252	79318	114J	27	189084	62983	125B	17
17253	02282	114G	36	190-15	89944	114B	88
17253	02282	114H	36	190-15	89944	114D	103
17253	02282	114J	28	1906	78189	79A	
17259	79318	114H	114	1906	78189	79A	53
17259	79318	114J	99	1906		KITS	
17322	79318	114H	67	19128		KITS	
17334	79318	114H	70	19128	19315	11D	21
173382	97424	114Q		19128	19315	11D	3
17358	79318	114G	57	19128	19315	11D	30
17358	79318	114H	57	19128	19315	11D	50
17358	79318	114J	44	19128	19315	11D	54
174S4		KITS		19128	19315	125A	80
174S4		KITS		19128	19315	125A	90
174S4	06848	214A	363	1931		KITS	
1756371	80064	MSUP		19340	70210	74	
176-71	89944	114A	85	1937		KITS	
176-71	89944	114C	62	1939	08804	154	
176-71	89944	114L	81	194-22		KITS	
1777	87915	175B	5	194-23A		KITS	
1779		KITS		194-24		KITS	
1779	87915	175B	15	1940172	80064	MSUP	
178-323-10B	19315	113E	129	1942	94581	50	
178-479-19B	19315	113E	109	19528-6	70210	74	
178-479-22B	19315	113E	23	19554		KITS	
1783		KITS		19555		KITS	
1783	87915	175B		1980U4-02	89944	109	
179-326-9B	19315	113E	94	2-00008-488	03848	MSUP	
179-625-15B	19315	113E	291	2-1247-7	45681	78A	21
179-625-30B	19315	113E		2-1247-8	45681	78A	22
179-625-30B	19315	113E	217	2-171Z		KITS	
179-792-30B	19315	113E		2-171Z	77820	212A	9
179-793-13B	19315	113E	292	2-171Z	77820	212A	95
18	88708	154	12	2-194		KITS	
18D56	66640	188		2-220		KITS	
18D93	66640	188		2-220	77820	212A	29
1818-15	90166	181A	28	2-244-21	45681	78A	16
1820-27		KITS		2-339		KITS	
1820-27	81168	125A	4	2-782Z	77820	212A	5
1820-6		KITS		2A4633-16		KITS	
1821-2A	19315	109		2CM70D6A	24446	11	
1823-4	90166	181A		2CM75C1	24446	11	
1823-6	90166	181A		2CM75C10B	24446	11	
1824	90166	181A		2CM75C10BT	24446	11	
1828-2A	19315	109		2CM75D2	24446	11	
18357		KITS		2CM75D2BT	24446	11	
18357	19315	175A	34	2CM75D2M	24446	11	
18357	19315	175A	61	2CM75D6	81893	11	
183719	62983	125B	19	2CM75D6D	24446	11	
183762	83369	125B	23	2CM75D6T	24446	11	
1839-150	89944	114L	59	2CM75F1	24446	11	
18420-0-150	73168	123	91	2CM75G10	24446	11	
18422-0-285	73168	123	93	2ET123M0D10	77045	113B	105
18423-0-120	73168	123	95	2F1-4-18295-1	73842	76	36
18423-0-350	73168	123	97	2F1-4-18295-2	73842	76	75
1845-15	89944	114A		2F1-4-18302	78286	80	143
1845-24	89944	114A		2F1-4-18303	73842	80	144
1845-25	89944	114L	43	2F1-4-18304	01297	81	124
1845-904	89944	114A		2F1-4-18305	78286	81	125
1845-905	89944	114A		2F1-4-18306	01297	81	126
1845X4-03	89944	114		2F1-4-20990	73842	80	
1845X4-03	89944	114A		2F1-4-20991	73842	80	

REFERENCE NUMBER	MFG CODE	FIG NUMBER	ITEM NUMBER	REFERENCE NUMBER	MFG CODE	FIG NUMBER	ITEM NUMBER
2F1-4-20992	73842	80		2028J8	66640	206	
2F1-4-20993	01297	81		2028S8	66640	206	
2F1-4-20994	73842	81		2029D17	66640	208	59
2F1-4-20995	01297	81		2029H17	66640	208	
2F1-5-20072	01297	79	193	2029H51	66640	184	41
2F1-5-20073	01297	79	194	2029H71	66640	208	60
2F1-5-20074	73842	79	192	2029J17	66640	208	
2F1-5-20075	73842	79	196	2029J51	66640	184	
2F1-5-20076	73842	79	195	2029J71	66640	208	
2F1-5-22918	73842	79		2029S17	66640	208	
2F1-5-22919	01297	79		2029S51	66640	184	
2F1-5-22920	73842	79		2029S71	66640	208	
2F1-5-22921	73842	79		203KDDFS118	21335	123B	48
2F1-5-22922	73842	79		203054	56232	113F	248
2PR600CWXA1	77200	175F		2031H20	66640	198	14
2PR600CWXA2	77200	175		2031H22	66640	198	15
2PR600CWX2	77200	175		2031J20	66640	198	
20-0067	70138	79B	17	2031J22	66640	198	
20-0067		KITS		2031S20	66640	198	
20-0069-1	70138	79B	11	2031S22	66640	198	
20-0070	70138	79B	16	2037D186	66640	189	6
20-0076		KITS		2039-17-1	89944	114L	22
20-0097	70138	79B		2039-17-2	89944	114L	
20-0099	70138	79B	14	2039-17-3	89944	114L	
20-0100	70138	79B	12	2039-17-4	89944	114L	
20-0101	70138	79B		2043H76	66640	206	38
20-0103-1	70138	79B	18	2043J76	66640	206	
20-0106		KITS		2043S76	66640	206	
20-0106	70138	79B	6	2045D19	66640	189	3
20-0107-1	70138	79B	21	2045D77	66640	190	
20-0238-1	70138	79B	19	2045D81	66640	184	23
20-0281-1	70138	79B	1	2049H60	66640	206	39
20-0446-3	70138	79B		2049J60	66640	206	
20-0446-3	70138	KITS		2049S60	66640	206	
20-1227-002	70138	79		205SZZ	38443	83	
20-1227-005	70138	79	80	205SZZ01-06A006A75	38443	83A	5
20-1227-005	70138	79B		20500-18		KITS	
20-7608	75511	124		20500-49		KITS	
20-7609	75511	BULK		20500-51		KITS	
20BC10JPPOL		KITS		205001-47		KITS	
20BC19X0B		KITS		20501		KITS	
20C29	58588	124		20501-47		KITS	
20C30	58588	124	59	20501-53		KITS	
20H12	66640	186		20501-56		KITS	
20H9	66640	188		20502-47		KITS	
20J12	66640	186		20503		KITS	
20J12	66640	187		20503-24		KITS	
20J9	66640	188		20503-24	19315	175A	
20S12	66640	186		20504		KITS	
20S12	66640	187		20504-45		KITS	
20S9	66640	188		20504-50		KITS	
2000	87915	KITS		2050445	19315	175A	35
2000	87915	175B		2050450	19315	175A	
201-141131-00-0103	30323	49	100	20506-104		KITS	
201-141131-00-0103	30323	49	103	20506-142		KITS	
201-141131-00-0103	30323	49	106	20506-58		KITS	
201-141131-00-0103	30323	49	109	20506-62		KITS	
201-141131-00-0103	30323	49	112	20506-7		KITS	
201-141131-00-0103	30323	49	115	20506-7	19315	175A	19
201-141131-00-0103	30323	49	118	20506-8		KITS	
201-141131-00-0103	30323	49	121	20506-82		KITS	
201-141131-00-0103	30323	49	94	20507-87		KITS	
201-141131-00-0103	30323	49	97	205098	33525	136	11
2017D10	66640	201	12	205098	33525	136	14
2019D116	66640	198	8	205098	33525	136	18
2019D19	66640	188	10	205098	33525	136	30
2019D56	66640	203	12	205098	33525	136	33
2019D8	66640	200	41	205098	33525	136	46
202SZZ77	38443	83A	9	205098	33525	136	51
202SZZ77	38443	84		2052D58	66640	208	
2028H8	66640	206		2052D66	66640	198	7

REFERENCE NUMBER	MFG CODE	FIG NUMBER	ITEM NUMBER	REFERENCE NUMBER	MFG CODE	FIG NUMBER	ITEM NUMBER
20521-2		KITS		2093D43	66640	214	3
20521-2	19315	175A	92	2094D319	66640	202A	4
205702	33525	136	19	2094D338	66640	200	
205702	33525	136	36	2094D92	66640	198	9
205702	33525	136	5	2094D94	66640	188	
205702	33525	136	56	2094H156	66640	208	43
205703	33525	136	25	2094H92	66640	198	
205703	33525	136	3	2094J94	66640	188	
205703	33525	136	34	2094S94	66640	188	
205703	33525	136	54	209804	81100	113A	83
205703	33525	136	7	209804	88818	114R	68
20632	89944	114A	75	21D294	66640	186	
20632	89944	114B	52	21D333	66640	186	9
20632	89944	114B	72	210032	56232	113F	11
20632	89944	114D	59	21014		KITS	
20632	89944	114D	80	21014	19315	175A	116
2067D12	66640	188		210588-3	81100	113A	82
2067D158	66640	188	31	210588-3	88818	114R	65
2067D21	66640	199	2	2106		KITS	
2067D536	66640	200	9	21089-2708	73680	18	22
2067D727	66640	188	3	211-16		KITS	
2067D9	66640	188	36	211-23		KITS	
2070D1	66640	206	8	211-301ABA	19315	113E	11
2070D11	66640	206	7	21105	83075	87	
2070D84	66640	190	31	21105	83075	87	14
207154	88818	113A	52	2112D1	66640	192	2
207154	88818	114R	38	2112D1	66640	192	6
2072D33	66640	210	35	2112D1	66640	193	4
2075D15	66640	188	35	2112D1	66640	194	15
2075D32	66640	188		2115351	88818	114R	30
207507	66640	187		2119D1	66640	190A	13
207597-6	81100	113A	90	2119D12	66640	188	47
207597-6	88818	114R	73	2119D17	66640	188	46
207598-2	81100	113A	89	2119D17	66640	188	50
207598-2	88818	114R	72	2119H17	66640	188	
2076		KITS		2119J17	66640	188	
2076	87915	175B	3	2119S12	66640	188	
2077		KITS		2119S17	66640	188	
2077	87915	175B	30	212		KITS	
2080		KITS		212	65415	125A	47
2080	87915	175B	10	212-12	71286	50	250
2083D1	66640	189		212-12	71286	50	296
2083D100	66640	190		212-12	71286	50	299
2083D198	66640	200		212-12	71286	50	48
2083D233	66640	200	19	212-12	71286	87	
2083D234	66640	210	11	212-12	71286	87	95
2083D240	66640	206	49	212-12	71286	113	32
2083D240	66640	208	18	212-12	71286	114	52
2083D240	66640	211	6	212-12	71286	130	87
2083D249	66640	190A	5	212-12	71286	130	90
2083D250	66640	207	41	212-12BR	71286	129	34
2083D251	66640	189	11	21215	83075	87	
2083D251	66640	206	53	21215	83075	87	13
2083D251	66640	208	57	21216	83075	87	
2083D253	66640	207	51	21216	83075	87	10
2083D253	66640	202A	19	21225-7	83075	87	31
2083D254	66640	206	71	21225-7	83075	87	9
2083D256	66640	207	39	21230	83075	87	
2083D259	66640	190	40	21230	83075	87	12
2083D261	66640	189	12	21278-2366	73680	BULK	
2083D280	66640	206	47	2132D11	66640	207	7
2083D4	66640	184	18	2132D12	66640	207	8
2083D77	66640	198	6	2132D14	66640	207	9
2089		KITS		2132D15	66640	207	10
2089	87915	175B	14	2132D2	66640	207	
209-62-375SS	19315	113E	31	2132D5	66640	190	59
2091D4	80044	BULK		21325	83075	87	
2093D16	66640	198	3	2134H100	66640	200	24
2093D18	66640	190A	4	2134H130	66640	206	40
2093D39	66640	190	5	2134H155	66640	207	14
2093D43	66640	207	2	2134H170	66640	184	39

REFERENCE NUMBER	MFG CODE	FIG NUMBER	ITEM NUMBER	REFERENCE NUMBER	MFG CODE	FIG NUMBER	ITEM NUMBER
2134H250	66640	200	26	216526-2	81100	113A	17
2134J100	66640	200		2168C	08724	178	
2134J130	66640	206		21681-0979		KITS	
2134J155	66640	207		21681-1258		KITS	
2134J170	66640	184		21681-1471		KITS	
2134J250	66640	200		21681-2366		KITS	
2134S100	66640	200		21686	08724	178	43
2134S130	66640	206		21704-0357	73680	25	
2134S155	66640	207		21708-0321		KITS	
2134S170	66640	184		21708-0321	73680	158	37
2134S250	66640	200		21708-0979	73680	157	12
2137D80	66640	200		21708-0979	73680	157	42
2137H65	66640	206		21708-1471	73680	25	38
2137H80	66640	200	27	21708-1471	73680	158	74
2137J65	66640	206		21708-2366	73680	27	8
2137J80	66640	200		21711-0067		KITS	
2137S65	66640	206		21711-0143		KITS	
2137S80	66640	200		21711-0255		KITS	
2138H145	66640	200		21711-0255	73680	25	42
2138J150	66640	184		21711-0357		KITS	
2138J155	66640	184		218450S3-4	81100	113A	43
2138S110	80044	BULK		218450S3-4	81100	114R	12
2138S145	66640	200		218450S3-4	81100	114R	29
2138S155	66640	184		218450S3-4	81100	114R	7
213800S4-4	88818	114R	19	218450S3-6	81100	113A	14
213801S0-5	88818	113A	53	218451S3-3 1-2	88818	113A	64
213801S0-5	88818	114R	39	218451S3-3 1-2	88818	114R	51
213801S2-4	88818	113A	49	2185D37	66640	188	
213801S2-4	88818	114R	35	218526	88818	114R	22
213801S3-4	81100	113A	24	218530	88818	114R	4
213801S3-4	81100	113A	7	218533	88818	114R	25
213801S3-4	88818	114R	16	218538	88818	114R	27
213801S3-4	88818	114R	5	218543	88818	114R	21
213801S4-4	81100	113A	12	22A17A02	72962	57	10
213801S4-4	81100	113A	4	22A27-22-62	72962	131	22
213801S4-4	88818	114R	2	22K1-048	72962	58	
213801S6-7	88818	113A	60	22M50	72962	96	19
213801S6-7	88818	114R	46	22M50	72962	96	25
214-459	00301	20	3	22M50	72962	106	44
2143H135	66640	208	39	22M50	72962	106	51
2143H165	66640	208	40	22NG1-048J8	72962	BULK	
2143H80	66640	208	33	22NTM82		KITS	
2143H80	66640	208	66	2206-12	89944	114L	5
2143J135	66640	208		2206-904-2	89944	114L	15
2143J165	66640	208		2206-905-2	89944	114L	16
2143J80	66640	208		2206B2	89944	114L	52
2143S135	66640	208		2222-015-29	97485	132	140
2143S165	66640	208		2222-017-30	97485	132	90
2143S80	66640	208		2222-017-30	97485	138	45
2145D100	66640	200		2222-33-1	83296	132	
2145H100	66640	200	25	2222-33-1	83296	138	
2145H125	66640	200	29	2222-33-2	83296	132	
2145H125	66640	BULK		2222-33-2	83296	138	
2145J100	66640	200		2222-49	97485	132	
2145J125	66640	200		22322SET12	79300	113	
2145S100	66640	200		22322SET12	79300	114	
2145S125	66640	200		2245-5	91577	122	2
2147H150	66640	198	17	225-201-1-2SS	19315	113E	286
2147J150	66640	198		225-201-1-2SS	19315	113E	289
2147S150	66640	198		225-202-1-2SS	19315	113E	228
21484-3275		KITS		225-202-1-2SS	19315	113E	236
215360	81100	113A	33	225-202-1-2SS	19315	113E	262
215363	81100	113A	3	225-202SS	19315	113E	170
215370	81100	113A	6	225-202SS	19315	113E	281
215374	81100	113A	26	225-203SS	19315	113E	223
215698	81100	113A	35	225-205-1-2SS	19315	113E	59
215809	88818	113A	73	225-205SS	19315	113E	167
215809	88818	114R	56	225-302-1-2SS	19315	113E	135
216079	88818	113A	48	225-303SS	19315	113E	175
216079	88818	114R	34	225-303SS	19315	113E	198
216526-1	81100	113A		225-402-1-2SS	19315	113E	89

REFERENCE NUMBER	MFG CODE	FIG NUMBER	ITEM NUMBER	REFERENCE NUMBER	MFG CODE	FIG NUMBER	ITEM NUMBER
225-603SS	19315	113E	134	248D77	66640	188	
225-604SS	19315	113E	140	248639	36378	BULK	
225-606SS	19315	113E	54	24902	75361	78	25
225243-2	81100	113A	2	25C01	89513	A24	
2259-16	89944	114L	24	250-205SS	19315	113E	150
2259-17	89944	114L	21	25100A37A1B1	19315	113	
2259-6	89944	114L	42	25100A37B1B1	06840	113	
2259-7	89944	114L	40	25101A37B1B1	19315	113	
2259-8	89944	114L	41	25101A37B1C1	06840	113	
2259-903	89944	114L	27	25101A37B1C1	96906	114	25
2259-906	89944	114L	26	25103		KITS	
2259-909	89944	114L	36	25122A37B1A1	02987	113	18
228001-4-8	81100	113A	10	25151-13-4		KITS	
22996-1		KITS		2541		KITS	
22996-1	19315	11D		2541	87915	175B	16
22996-15		KITS		254473	56232	113F	205
23C47	58588	123		254935	56232	113F	41
23D51	66640	200	35	2588	90166	181A	
23D52	66640	210	38	2588	90166	181A	41
23D55	66640	200	33	25888	66640	199	19
23D55	66640	207	45	25937	66640	206	21
23D63	66640	207	43	25937Y10	66640	206	
230-304SS	19315	113E	67	25937Y20	66640	206	
230-305SS	19315	113E	74	26C61	89513	123	
230-404SS	19315	113E	91	26C63	58588	123	
230-405-1-2SS	19315	113E		26C64	89513	123	
230-405SS	88917	113E		2600-1W	71286	132	100
230-405SS	19315	113E	213	2600-12	71286	138	36
23001-368		KITS		2600-15	71286	49	
23001-380		KITS		2600-2	71286	87	
23065	66640	190A	9	2600-2S	71286	129	33
23066	66640	190A	10	2600-2S	71286	139	25
232-405-1-2SS	19315	113E	13	2600-3	71286	112	3
232-405-1-2SS	19315	113E	14	2600-3	71286	130	84
232-405SS	19315	113E	3	2600-3	71286	139	24
232-405SS	19315	113E	4	2600-3W	71286	112	2
23296	79300	113		2600-8W	71286	41	92
23296	79300	114		2600LW	71286	132	101
23702-6599	73680	178		2600LW	71286	139	
23894		KITS		26004-7056	73680	38	64
240	10646	MSUP		26004-7056	73680	38	67
240-001-1-2SS	19315	113E	147	26004-7085	73680	38	58
240-202-1-2SS	19315	113E	81	26070	73680	185	5
240-202-1-2SS	19315	113E	97	26072	66640	208	
240-203	19315	113E	268	2618		KITS	
240-204	19315	113E	220	2618	11599	175H	35
240-204SS	19315	113E	246	2620		KITS	
240-204SS	19315	113E	275	2620	11599	175H	37
240-303	19315	113E	261	2626479	06848	214A	299
240-305-1-2SS8E	19315	113E		2626497	06848	214A	235
240-305SS8E	19315	113E	34	2630376	06848	214A	225
240-305SS8E	19315	113E	41	265625	56232	113F	199
240-306SS8E	19315	113E		265629	56232	113F	196
244-16S	71286	50	249	265635	56232	113F	200
244-16S	71286	172	7	265636	56232	113F	201
244D161	66640	204	3	265637	56232	113F	204
244D27	66640	184	7	265638	56232	113F	202
244D98	66640	203	9	265640	56232	113F	207
244848	56232	113F	79	265643	56232	113F	228
244848	56232	113F	84	2662		KITS	
244907	56232	113F	69	2662	11599	175H	2
2452-02	72962	57		2677		KITS	
2452-048	72962	73		2677	11599	175H	22
2452-048	72962	91		27D111	66640	213	3
2452-126	72962	36	29	27D156	66640	186	6
245372	56232	113F	239	27D24	66640	215	5
245467	56232	113F		27D30	66640	186	3
245559	56232	113F	236	27D309	66640	210	
245560	56232	113F		27D330	66640	210	18
245562	56232	113F	237	27D331	66640	210	25
2468A	75361	78		27D331	66640	210	4

REFERENCE NUMBER	MFG CODE	FIG NUMBER	ITEM NUMBER	REFERENCE NUMBER	MFG CODE	FIG NUMBER	ITEM NUMBER
27D98	66640	196	3	3083	75183	106	31
27D98	66640	197	3	308621	56232	113F	134
2700LW	71286	41		308656	56232	113F	148
2716	53655	109		308658	56232	113F	144
27471	81349	109		308739	56232	113F	168
27609-7380	73680	20	2	308740	56232	113F	172
276668	56232	113F	2	308741	56232	113F	156
276963	56232	113F	197	308793	56232	113F	33
2775	93037	12	50	309215	56232	113F	67
27920	00736	28		309217	56232	113F	138
279531	56232	113F	226	309218	56232	113F	136
28C45	89513	123		309221	56232	113F	125
280174	56232	113F	194	309222	56232	113F	124
280614	56232	113F	238	309223	56232	113F	140
282809	56232	113F	231	309224	56232	113F	256
283828	56232	113F	247	309225-1	56232	113F	119
28778	66640	187	3	309225-2	56232	113F	
28842	66640	186	4	309225-3	56232	113F	
28922	66640	208		309374	56232	113F	106
28922N3	66640	208	11	309395	56232	113F	75
29D11	66640	190A		309419	56232	113F	34
29D45	66640	188		309542	56232	113F	57
29H10	66640	206		309581	56232	113F	15
29J10	66640	206		309582	56232	113F	37
29P10	66640	206		309598	56232	113F	153
29S10	66640	206		309630	56232	113F	101
29T10	66640	206		309631	56232	113F	105
2911C1728S	99171	K5		309632	56232	113F	190
2911C1728S	99171	MSUP		309647	56232	113F	30
29250	66640	199	3	309654	56232	113F	52
292575	56232	113F	111	309709	56232	113F	128
292575	56232	113F	92	309722	56232	113F	
29274		KITS		309724	56232	113F	183
29274	19315	11D	43	309737	81100	113A	76
29274	19315	11D	47	309737	81100	114R	59
295310	76530	42	50	309738	56232	113F	93
29539	66640	201	6	309742	81100	113A	95
295447	76530	154		309742	88818	114R	74
295508	56232	113F	78	309744	56232	113F	
295508	56232	113F	83	309780	56232	113F	86
296-909B	89944	114B	30	309965	56232	113F	62
296-909B	89944	114D	32	309997	56232	113F	
298708	56232	113F	198	31-0414-3	70138	79B	
3X1601	62983	35A	18	31-0737-1		KITS	
3X1601		KITS		31-0737-1	70138	79B	20
3X46998	62983	125B	9	310026	56232	113F	76
3X46999	62983	125B	8	310373	56232	113F	
3X83312	62983	35A	20	310458-1	56232	113F	56
3X83312		KITS		31096	00799	79A	56
3X84185	62983	35A	27	31096		KITS	
3X84185	62983	35A	7	311267	56232	113F	185
3X84185		KITS		311268	56232	113F	184
3X93143	62983	35A	17	311781	56232	113F	254
3X93145	62983	35A	21	311799	56232	113F	169
3X93145		KITS		311800	56232	113F	164
3X95637	62983	35A	22	311871	56232	113F	216
3X95637		KITS		311981	56232	113F	193
30E07-3A	24446	11		312D3	66640	184	29
30E07-3A	19315	11D		312356	56232	113F	210
30E07-3D	19315	11		3125		KITS	
30E07-3D	19315	11D		3125	87915	175B	26
30E07-3E	19315	11		312786	56232	113F	209
30E07-3E	19315	11D		312816	56232	113F	224
30E07-3F	19315	11		313119	56232	113F	141
30E07-3F	19315	11D		3132	13804	152	14
3008A	64560	124	79	313204	56232	113F	80
3028-6	73842	BULK		313207	56232	113F	63
3040		KITS		313211	56232	113F	12
3040	87915	175B	32	314013	56232	113F	118
305-02-2	97485	77	86	314014	56232	113F	
305390	56232	113F	70	314015	56232	113F	

REFERENCE NUMBER	MFG CODE	FIG NUMBER	ITEM NUMBER	REFERENCE NUMBER	MFG CODE	FIG NUMBER	ITEM NUMBER
314016	56232	113F	19	333S642		KITS	
314017	56232	113F	20	333S642	06848	214A	439
314017	56232	113F	29	33338		KITS	
314098	56232	113F	235	334	24446	130	19
314098	56232	113F	243	334	24446	130	52
314099	56232	113F	234	339A1	98425	A24	
314099	56232	113F	244	34A164	66640	188	
314485	56232	113F	135	34D131	66640	189	5
314486	56232	113F	145	34D164	66640	188	9
315S3		KITS		34D241	66640	193	3
315S3	06848	214A	223	34D241	66640	213	6
315S8		KITS		34D283	66640	184	24
315S8		KITS		34D284	66640	184	
315S8	06848	214A	315	34D285	66640	184	
315S8	06848	214A	358	34D4	66640	183A	
315352	81100	113A	34	34D72	66640	187	40
315613	88818	113A	71	34D72	66640	187	9
315613	88818	114R	54	34H164	66640	188	
316075	81100	113A	32	34J164	66640	188	
316338	56232	113F	55	34K164	66640	188	
316854	56232	113F	166	34L164	66640	188	
316992	56232	113F	23	34R164	66640	188	
316993	56232	113F	24	34S164	66640	188	
318197	56232	113F	219	34149C		KITS	
318278	56232	113F	143	3418		KITS	
318320-1	56232	113F	213	3438		KITS	
318320-2	56232	113F	214	3438	11599	175H	6
318333	56232	113F	252	34465R	30778	41	161
318524	88818	114R	18	34465R	30778	41	202
318525	88818	114R	23	34465R	30778	48	12
318539	88818	114R	45	3479		KITS	
318657	56232	113F	64	35016C	78286	28	
318684-1	56232	113F		35016C		KITS	
318684-2	56232	113F	114	35037100010	89944	114L	85
318764	56232	113F	186	350406A		KITS	
31879		KITS		350406A	06848	214A	
31879	00779	79A	64	350407A	06848	214A	
31896	19315	11D	59	350496B	06848	KITS	
319016	56232	113F	3	350496B	06848	214A	
319017	56232	113F	6	350497A	06848	KITS	
3193		KITS		350497A	06848	214A	
3193	11599	175H	25	350507A	06848	KITS	
3194	11599	175H	23	350507A	06848	214A	
32-0022	77200	175		350509A	06848	KITS	
32-0022	77200	KITS		350509A	06848	214A	
32-0023	77200	175		35067100010	89944	114L	82
32-0023	77200	KITS		35071630010	89944	114B	11
32C640	72882	115		352	86577	113B	73
320-625-2-063S	98625	123	61	352	83296	113B	99
321-625-20615	76700	11	17	35350	80099	113	
322063	56232	113F	174	35350	80099	114	
323799	56232	113F	16	36A4467	81352	F1	3
3242	11599	175H	28	36A4469	80049	F1	5
3244	11599	175H	38	36B4466	81352	F1	6
324761	56232	113F	158	36D2	66640	200	14
3252		KITS		36D7	66640	184	
3252	11599	175H	8	36E00-2A	06840	175	
32832	75183	45	30	36KDDLT	21335	81A	58
328617		KITS		36KDDLT		KITS	
328617	06848	214A		360186		KITS	
33		KITS		360186	06848	214A	95
33D2721-1	80094	F1	2	360242S7SAC	23040	208	
33S44375-940	94135	208	15	360339	06848	214A	509
330-101 1-2ST	19315	113E	73	360350		KITS	
33071630020	89944	114B	85	360371	06848	214A	339
33197R	30778	41	160	36037100010	89944	114L	71
33197R	30778	41	201	36037100020	89944	114L	89
33197R	30778	48	13	36037100030	89944	114L	35
33197R	24617	BULK		360372	06848	214A	
33204	80099	113		360383	06848	214A	303
33204	80099	114		360384	06848	214A	305

REFERENCE NUMBER	MFG CODE	FIG NUMBER	ITEM NUMBER	REFERENCE NUMBER	MFG CODE	FIG NUMBER	ITEM NUMBER
360388	06848	214A	103	364132	06848	214A	
360389	06848	214A	110	364211	06848	214A	160
360390	06848	214A	107	364212	06848	214A	170
360397	06848	214A	31	364340	06848	214A	459
360401	06848	214A	8	364341	06848	214A	
360420		KITS		364342	06848	214A	
360420	06848	214A	92	364370	06848	214A	408
360421		KITS		364371	06848	214A	
360421	06848	214A	93	364372	06848	214A	
360530		KITS		364381	06848	214A	409
360530	06848	214A	75	364382	06848	214A	
360538	06848	214A	5	364394		KITS	
360570	06848	214A	366	364394	06848	214A	466
360570	06848	214A	389	364395		KITS	
360571	06848	214A	369	364395	06848	214A	436
360571	06848	214A	392	364400		KITS	
360576	06848	214A	370	364400	06848	214A	429
360576	06848	214A	393	364400	06848	214A	437
360694		KITS		364401		KITS	
360694	06848	214A	43	364401	06848	214A	465
360699	06848	214A	74	364401	06848	214A	467
360879	06848	214A	151	364454		KITS	
360880	06848	214A		364454	06848	214A	111
360881	06848	214A	149	364454	06848	214A	284
360882	06848	214A	140	364491		KITS	
360883	06848	214A	148	364491	06848	214A	443
360884		KITS		364708		KITS	
360884	06848	214A	139	364708	06848	214A	364
360909-54	06848	214A	503	364746		KITS	
361143	06848	214A	1	364746	06848	214A	14
361401	06848	214A	410	364785		KITS	
361402	06848	214A		364785	06848	214A	406
361453	06848	214A	189	364786		KITS	
361465		KITS		364786	06848	214A	19
361465	06848	214A	474	364790	06848	214A	
361569	06848	214A	493	364794-56		KITS	
361570	06848	214A	486	364794-56	06848	214A	234
361609		KITS		364807	06848	214A	220
361618		KITS		364831	06848	214A	341
361619		KITS		364832	06848	214A	
362133	06848	214A	218	364846		KITS	
362406		KITS		364846	06848	214A	
362406	06848	214A	256	364963		KITS	
362406	06848	214A	411	364963	06848	214A	258
362406	06848	214A	412	364977	06848	214A	432
362406	06848	214A	413	364996	06848	214A	257
362406	06848	214A	414	365067		KITS	
362410	06848	214A	415	365067	06848	214A	441
362410	06848	214A	416	365178		KITS	
362792	06848	214A	244	365178	06848	214A	494
363725	06848	214A	430	365179		KITS	
363807	06848	214A	68	365179	06848	214A	172
363860	06848	214A	272	365180		KITS	
363931		KITS		365180	06848	214A	196
363931	06848	214A	239	365180	06848	214A	350
363939		KITS		365180	06848	214A	83
363939	06848	214A	249	365223		KITS	
363941	06848	214A		365223	06848	214A	452
363942		KITS		365223	06848	214A	478
363942	06848	214A	248	365261		KITS	
363943	06848	214A	243	365261	06848	214A	360
363960	06848	214A	401	365263	06848	214A	
364023		KITS		365264		KITS	
364023	06848	214A	462	365264	06848	214A	245
364026		KITS		365264	06848	214A	254
364026	06848	214A	461	365270	06848	214A	252
364099		KITS		365272	06848	214A	255
364124	06848	214A	166	365281	06848	214A	337
364131		KITS		365282	06848	214A	
364131	06848	214A		365320		KITS	
364132		KITS		365320		KITS	

REFERENCE NUMBER	MFG CODE	FIG NUMBER	ITEM NUMBER	REFERENCE NUMBER	MFG CODE	FIG NUMBER	ITEM NUMBER
365320	06848	214A	359	366238	06848	214A	404
365321		KITS		366456	06848	214A	264
365321		KITS		366460	06848	214A	268
365321	06848	214A	365	366470	06848	214A	291
365393	06848	214A	67	366471	06848	214A	
365396		KITS		366472	06848	214A	
365396	06848	214A	317	366625	06848	214A	263
365397	06848	214A	314	366701	06848	214A	
365420	06848	214A		366856	06848	214A	447
365424	06848	214A	310	367019		KITS	
365434	06848	214A	428	367019	06848	214A	
365457	06848	214A	407	367020		KITS	
365458	06848	214A	330	367020	06848	214A	
365470	06848	214A	246	367480		KITS	
365480		KITS		367480	06848	214A	250
365480		KITS		367530	06848	214A	251
365480	06848	214A	361	367750	06848	214A	557
365510	06848	214A	458	368343		KITS	
365512	06848	214A	349	368343	06848	214A	123
365513		KITS		368343	06848	214A	345
365513	06848	214A	224	37D129	66640	190A	27
365611		KITS		37026	66640	200	47
365611	06848	214A	438	371-10	89944	BULK	
365637		KITS		371-10	89944	114A	40
365637	06848	214A	320	371-10	89944	114C	95
365638	06848	214A	321	371-10	89944	114L	51
365694	06848	214A	82	371-11	89944	114A	39
365738		KITS		371-11	89944	114C	96
365738	06848	214A	536	371-11	89944	114L	50
365738	06848	214A	543	371-12	89944	114A	11
365739-3 1-2	06848	214A	530	371-12	89944	114C	29
365739-3 1-2	06848	214A	537	371-127B	89944	114A	25
365787	06848	214A	217	371-127B	89944	114C	15
365794		KITS		371-128	89944	114C	34
365794	06848	214A	435	371-128C	89944	114A	8
365794	06848	214A	468	371-129B	89944	114C	52
365834	06848	214A	551	371-13B	89944	114A	2
365883	06848	214A	544	371-13B	89944	114C	38
365893	06848	214A	80	371-13B	89944	114L	4
365936	06848	214A	400	371-14	89944	114A	1
365942	06848	214A	7	371-14	89944	114C	39
365944	06848	214A	195	371-15	89944	114A	46
365947	06848	214A	579	371-15	89944	114C	89
365948	06848	214A	288	371-16	89944	114A	44
365949	06848	214A	13	371-16	89944	114C	91
365951	06848	214A	580	371-18	89944	114C	37
365952	06848	214A		371-18C	89944	114A	3
365962	06848	214A		371-20B	89944	114A	28
366B105	89944	114B	40	371-21	89944	114C	28
366B105	89944	114D	42	371-21B	89944	114A	12
366B13	89944	114B	93	371-21B	89944	114C	30
366B13	89944	114D	101	371-22B	89944	114A	10
366B13	89944	114D	79	371-24	89944	114C	14
366B14	89944	114B	39	371-27	89944	114L	38
366B14	89944	114B	71	371-30	89944	114C	
366B14	89944	114D	100	371-30B	89944	114A	24
366B14	89944	114D	41	371-30B	89944	114C	
366B14	89944	114D	78	371-41	89944	114A	52
366B19	89944	114B	41	371-41	89944	114C	85
366B19	89944	114D	43	371-41	89944	114L	32
366B19	89944	114D	76	371-44	89944	114C	36
366B25B	89944	114B	83	371-45	89944	114C	
366B25B	89944	114D	96	371-45B	89944	114A	42
366B56	89944	114D	82	371-45B	89944	114C	93
366B58	89944	114D	106	371-46	89944	114A	37
366S12	89944	114D	97	371-46	89944	114C	3
366193		KITS		371-46	89944	114L	48
366193	06848	214A	193	371-49-1	89944	114C	69
366199		KITS		371-49-1	89944	114D	
366199	06848	214A	190	371-49-1	89944	114L	75
366238		KITS		371-52	89944	114A	54

REFERENCE NUMBER	MFG CODE	FIG NUMBER	ITEM NUMBER	REFERENCE NUMBER	MFG CODE	FIG NUMBER	ITEM NUMBER
371-52	89944	114C	82	371-910	89944	114L	37
371-53	89944	114A	35	371-911	89944	114A	49
371-53	89944	114C	5	371-911	89944	114C	87
371-53	89944	114L	45	371-913	89944	114A	31
371-58	89944	114A	23	371-913	89944	114C	9
371-58	89944	114C	18	371-914	89944	114A	30
371-58	89944	114L	23	371-914	89944	114C	10
371-60	89944	114C		371-916	89944	114C	72
371-60B	89944	114A	51	371-921B	89944	114C	66
371-60B	89944	114C	86	371-922	89944	114C	57
371-60B	89944	114L	31	371-923	89944	114A	60
371-61B	89944	114A	15	371-923	89944	114A	87
371-61B	89944	114C	25	371-923	89944	114C	65
371-62	89944	114C	27	371-923	89944	114L	84
371-64	89944	114C	51	371-930	89944	114C	67
371-72	89944	114A	64	371-95	89944	114A	95
371-72	89944	114A	90	371-95	89944	114B	28
371-72	89944	114C		371-95	89944	114C	42
371-72	89944	114C	74	371-95	89944	114D	30
371-72	89944	114L	61	371-95	89944	114L	91
371-72	89944	114L	64	371-96	89944	114A	70
371-73B	89944	114A	61	371-96	89944	114A	78
371-73B	89944	114C	56	371-96	89944	114A	96
371-75	89944	114A	84	371-96	89944	114B	74
371-75	89944	114L	83	371-96	89944	114B	90
371-75	89944	114C	60	371-96	89944	114C	
371-76	89944	114C	63	371-96	89944	114C	43
371-77	89944	114A	81	371-96	89944	114D	104
371-77	89944	114C	64	371-96	89944	114L	72
371-77	89944	114L	79	371-96	89944	114L	77
371-78	89944	114A	66	371-96	89944	114L	90
371-78	89944	114B	59	371-98	89944	114L	39
371-78	89944	114C	45	371K118B1234	89944	114C	20
371-78	89944	114D	110	371K118B15	89944	114A	20
371-79	89944	114A	69	371K118B15	89944	114C	
371-79	89944	114C	50	371K118B17T020	89944	114C	
371-79	89944	114D	109	371K121	89944	114A	45
371-8	89944	114A	43	371K121	89944	114C	90
371-8	89944	114C	92	371K24B3	89944	114A	26
371-80	89944	114A	62	371K25B4	89944	114A	
371-80	89944	114A	89	371K3B	89944	114C	31
371-80	89944	114B	44	371K903C	89944	114C	1
371-80	89944	114C		371K903D	89944	114C	
371-80	89944	114C	75	371K904C2	89944	114A	27
371-80	89944	114D	50	371K904C2	89944	114C	13
371-80	89944	114L	58	371P933B	89944	114A	92
371-80	89944	114L	62	371P933B	89944	114L	65
371-85	89944	114C	73	371S25	89944	114A	38
371-88	89944	114C	49	371S25	89944	114C	2
371-9	89944	114C	94	371S25	89944	114L	49
371-9B	89944	114A	41	371S54	89944	114A	32
371-90B	89944	114A	77	371S54	89944	114C	8
371-90B	89944	114C	68	371S54	89944	114L	28
371-90B	89944	114L	76	371S7	89944	114A	33
371-903	89944	114A	29	371S7	89944	114C	7
371-903	89944	114C	11	371S904	89944	114A	34
371-905	89944	114C	12	371S904	89944	114A	48
371-905-3	89944	114C		371S904	89944	114C	6
371-905-4	89944	114C		371S905	89944	114A	58
371-906	89944	114A	56	371S905	89944	114C	78
371-906	89944	114C	81	37875	66640	184	
371-907	89944	114A	50	38-13244Z	16954	118	112
371-907	89944	114C	80	38B3323	80049	F1	7
371-908	89944	114A	55	38KDDLT	21335	81A	56
371-908	89944	114C	83	38KDDLT		KITS	
371-908	89944	114L	34	3803	11599	175H	39
371-909	89944	114A	53	382-616	19315	113E	200
371-909	89944	114C	84	382-616SS	19315	113E	202
371-909	89944	114L	33	382-620SS	19315	113E	
371-910	89944	114A	57	3820		KITS	
371-910	89944	114C	79	3820	11599	175H	41

REFERENCE NUMBER	MFG CODE	FIG NUMBER	ITEM NUMBER
3821		KITS	
3831		KITS	
38448	62983	125B	12
3867		KITS	
3867	11599	175H	29
387015-2	77932	A24	6
38751	62983	125B	32
39A33	58588	123	
39A37	89513	123	
39FL1-05A323A60	38443	123B	
3900	87915	175B	31
3900	87915	175B	37
3904	87915	175B	20
3907-20		KITS	
3907-20	87915	175B	2
39071630010	89944	114B	75
3909		KITS	
3909	87915	175B	19
391226B	06848	214A	
391226B	06848	214A	36
3915		KITS	
3915	87915	175B	18
391510-64	06848	214A	
391510-64	06848	214A	39
391513-2	06848	214	
391521	06848	214A	
391521A	06848	214A	
391521A	06848	214A	49A
391522A	06848	214A	
391523A	06848	214A	
391523A	06848	214A	49B
391539-28-1	06848	214A	
391539-28-1	06848	214A	4
3916		KITS	
3916	87915	175B	4
391722-5	06848	214	
391722-5	06848	214A	
391832	06848	214A	
391832	06848	214A	53
391869-1	06848	214	1
3923		KITS	
3923	11599	175H	20
3924	87915	175B	36
39250	08162	158	
39250	08162	162B	
392502-51		KITS	
392502-51	06848	214A	499
392502BLK		KITS	
392502BLK	06848	214A	204
392525	06848	214A	533
392525	06848	214A	540
392525-1	06848	214A	
392525-2	06848	214A	
392545		KITS	
392545	06848	214A	37
392549		KITS	
392680		KITS	
392680	06848	214A	517
392684		KITS	
392705		KITS	
392705	06848	214A	215
392714	06848	214A	510
392725		KITS	
392725	06848	214A	511
392726		KITS	
392726	06848	214A	506
392737		KITS	
392737	06848	214A	71
392762		KITS	
392762	06848	214A	187
392765		KITS	

REFERENCE NUMBER	MFG CODE	FIG NUMBER	ITEM NUMBER
392765	06848	214A	186
392766		KITS	
392766	06848	214A	184
392767		KITS	
392767	06848	214A	182
392782		KITS	
392782	06848	214A	42
392830	06848	214A	335
392830	06848	214A	338
392831	06848	214A	
392832	06848	214A	
392964		KITS	
392964	06848	214A	185
392985	06848	214A	191
392992		KITS	
392992	06848	214A	192
393034	06848	214A	269
393035	06848	214A	270
393036	06848	214A	283
393037		KITS	
393037	06848	214A	273
393044-34	06848	214A	211
3931		KITS	
3931	87915	175B	1
393104	06848	214A	188
393105	06848	214A	179
393194		KITS	
393194	06848	214A	181
393194	06848	214A	34
393297		KITS	
393297	06848	214A	352
393348		KITS	
393348	06848	214A	318
393349		KITS	
393349	06848	214A	319
393360		KITS	
393360	06848	214A	178
393399		KITS	
393399	06848	214A	203
393399	06848	214A	454
393399	06848	214A	484
393399	06848	214A	504
393450	06848	214A	560
3935	80510	113	
3935	80510	114	17
393506		KITS	
393506	06848	214A	333
393625		KITS	
393625	06848	214A	209
393626	06848	214A	371
393629		KITS	
393629	06848	214A	373
393629	06848	214A	396
393630		KITS	
393630	06848	214A	375
393630	06848	214A	398
393631		KITS	
393631	06848	214A	374
393631	06848	214A	397
393644		KITS	
393644	06840	214A	200
393646		KITS	
393646	06848	214A	94
393648	06848	214A	394
393675		KITS	
393675	06848	214A	126
393688	06848	214A	106
393703	06848	214A	120
393704	06848	214A	125
393728		KITS	
393728	06848	214A	132

REFERENCE NUMBER	MFG CODE	FIG NUMBER	ITEM NUMBER	REFERENCE NUMBER	MFG CODE	FIG NUMBER	ITEM NUMBER
393788		KITS		396698	06848	214A	472
393788	06848	214A	419	396699	06848	214A	471
393851	06848	214A	346	396700	06848	214A	475
393852	06848	214A		396702		KITS	
393940	06848	214A	124	396702	06848	214A	442
393941	06848	214A		396705	06848	214A	433
393942	06848	214A		396706	06848	214A	476
393946		KITS		396707		KITS	
393946	06848	214A	100	396707	06848	214A	470
394064		KITS		396716		KITS	
394064	06848	214A	307	396716	06848	214A	431
394065		KITS		396719		KITS	
394065	06848	214A	308	396719	06848	214A	479
39412	08162	158		396746		KITS	
39412	08162	162B		396746	06848	214A	312
394226		KITS		39677A	80201	205	22
394226	06848	214A	113	397-1	94640	75	
394226	06848	214A	286	397-1	94640	131	60
394227		KITS		397-1	94640	131	63
394227	06848	214A	112	397-1	94640	132	157
394227	06848	214A	285	397-1	94640	132	31
394228	06848	214A	344	397-1	94640	132	32
394229		KITS		397-1	94640	132	82
394229	06848	214A	114	397-1	94640	BULK	
394229	06848	214A	287	397-12	94640	132	37
394255	06848	214A	460				
394256		KITS		397-2	94640	131	64
394256	06848	214A	38	397-2	94640	131	92
394274		KITS					
394274	06848	214A	131	397-3	94640	131	87
394276	06848	214A	97	397-3	94640	132	108
394291		KITS		397-3	94640	132	155
394291	06840	214A	118	397-3	94640	137	40
394354		KITS					
394354	06848	214A	450				
394373		KITS					
394373	06848	214A	577				
394373	06848	214A	578	397-5	94640	129	1
394414	06848	214A	512	397-5	94640	131	61
394446	06848	214A	20	397-5	94640	132	107
394454	06848	214A	518				
394460	06848	214A	586				
394489	78610	214A	129				
394589		KITS					
394589	06848	214A	145				
394627		KITS					
394627	06848	214A	156	3971		KITS	
394627	06848	214A	158	3971	87915	175B	
394627	06848	214A	532	397311	06848	214A	
394627	06848	214A	539	397312	06848	214A	
394629	06848	214A	183	397330	06848	214A	326
394944		KITS		397461	06848	214A	
394944	06848	214A	290	397462	06848	214A	
396H1	66640	198	16	397469		KITS	
396H1	66640	200	28	397469	06848	214A	165
396J1	66640	184	40	397469	06848	214A	343
396J1	66640	198		397469	06848	214A	585
396K1	66640	198		397471	06848	214A	
396S1	66640	198		397472	06848	214A	
396S1	66640	200		397560		KITS	
396134		KITS		397645		KITS	
396134	06848	214A	171	397645	06848	214A	259
396339	06848	214A	115	397648	06848	214A	127
396369		KITS		3977		KITS	
396369	06848	214A	122	3977	87915	175B	22
396574	06848	214A	135	3979	90166	181A	12
396575	06848	214A	133	397967		KITS	
396689		KITS		397967	06848	214A	163
396689	06848	214A	473	398019	06848	214A	519
396690	06848	214A	451	398353		KITS	
396698		KITS		398353	06848	214A	167

REFERENCE NUMBER	MFG CODE	FIG NUMBER	ITEM NUMBER	REFERENCE NUMBER	MFG CODE	FIG NUMBER	ITEM NUMBER
398375	06848	214A	513	40031	98505	80	33
398535		KITS		40031	98505	81	22
398535	06848	214A	253	401	05734	41	69
398629		KITS		4014	77147	114H	40
398629	06848	214A	194	4014	77147	114J	32
398642	06848	214A	154	4015H1	66640	184	35
398653		KITS		4015J1	66640	184	
398653	06848	214A	161	4015S1	66640	184	
398653	06848	214A	417	401806H	71664	206	37
398879		KITS		40289320010	89944	114A	93
398879	06848	214A		40289320010	89944	114L	74
398921	06848	214A	418	4030	77247	MSUP	
398929		KITS		4036D14	66640	207	
398929	06848	214A	6	4036D4	66640	200	
398945		KITS		4036D7	66640	207	
398945	06848	214A	587	4061D1	66640	203	8
398976		KITS		4061D1	66640	204	2
398976	06848	214A	328	408AA	11599	175H	21
399177		KITS		41-7326	79318	114H	100
399177	06848	214A	230	41-7326	79318	114J	85
399178	06848	214A		41-7326-1	79318	114G	105
399223		KITS		41A9177	98750	115	32
399223	06848	214A	77	4103-23	87915	175	
399224		KITS		4103-42	87915	175B	
399224	06848	214A	76	410725	66640	200	36
399226		KITS		411716	66640	200	31
399226	06848	214A	69	41242A	80201	203	
399232		KITS		413001	75915	138	
399232	06848	214A	79	413003	75915	130	66
399256		KITS		413003	75915	130	67
399256	06848	214A	142	413003	75915	130	70
399257		KITS		4131102-2A1A		KITS	
399257	06848	214A	143	4131102-2A1A	81039	90A	27
399851	06848	214A	162	4131102-2A1A	81039	90A	43
399861	06848	214A	134	4131104-0A1A	81039	90A	40
399862	06848	214A		4131104-0A1A		KITS	
399901	06848	214A	581	4131104-2A1A		KITS	
399902	06848	214A		413331	66640	208	
399983		KITS		4136042P58	24446	114P	
399983	06848	214A	368	4136043P117	97424	114P	53
399983	06848	214A	391	413817	66640	214	
399996	06848	214A	395	4141451P1	24446	114P	10
399998		KITS		4141451P2	24446	114P	
399998	06848	214A	372	4141451P3	97424	114P	
399999	06848	214A	96	4141772P3	24446	114P	11
4-2547-8	45681	78A	12	4141886P2	24446	114P	90
4-547-2	45681	78A	19	4141886P2	24446	114Q	29
4-547-4-1	45681	78A	14	4141886P2	24446	114Q	71
4-547-7-1	45681	78A	13	4141886P3	24446	114P	42
4-6957	15814	119	4	4141928G3	24446	114P	
4BIC00X0B	08484	125A	140	4145566P31	97424	114P	78
48IC12WPPOL		KITS		4145566P31	97424	114Q	53
4BIC12WPPOL	70413	125A		4145593G1	24446	114P	49
481C00X0B		KITS		4145633P1	24446	114P	
40D8445-2	80049	138	38	4145811P1	24446	114P	
400164	79300	113		4145811P10	97424	114P	24
400164	79300	114		4145839G1	24446	114P	43
4002-3W	71286	132		4145839G2	24446	114P	91
4002-4	71286	44	5	4145839G4	24446	114P	
4002-4W	71286	132	102	4145840P1	24446	114P	
4002-5	71286	44	9	4149147P1	97424	114P	12
4002-5W	71286	170		4149166P1	24446	114P	73
4002-6	71286	44	13	4149166P1	24446	114P	83
4002-6	71286	44	7	4149166P1	24446	114Q	59
4002-7	71286	44	11	4149166P1	24446	114Q	62
4002N	71286	44	10	4149180G1	24446	114P	95
4002N	71286	44	12	4149180G1	24446	114Q	76
4002N	71286	44	14	4149340P1	24446	114P	66
4002N	71286	44	6	4149349P1	24446	114P	51
4002N	71286	44	8	4149349P1	24446	114Q	36
4002N2-040	71286	132	104	4149355P1	24446	114P	52

REFERENCE NUMBER	MFG CODE	FIG NUMBER	ITEM NUMBER	REFERENCE NUMBER	MFG CODE	FIG NUMBER	ITEM NUMBER
4149380P1	24446	114P	59	4152118G1	24446	114P	75
4149380P1	24446	114Q	41	4152124P1	24446	114P	5
4149392P2	24446	114P		4152127G1	24446	114P	47
4149392P3	24446	114P	16	4152127G1	24446	114Q	30
4149392P3	24446	114Q	10	4152128G1	24446	114P	54
4149399G1	24446	114P	50	4152128G9	24454	114Q	37
4149399G1	24446	114Q	35	4152129G1	97424	114Q	34
4149406P1	24446	114P	94	4152182G1	24446	114P	
4149406P2	24446	114P	44	4152232G2	24446	114P	
4149406P2	24446	114Q	31	4152232G8	97424	114P	46
4149406P6	97424	114Q	74	4152232G8	97424	114Q	27
4149418P1	24446	114P	69	4152244P3	97424	114P	55
4149504G33	24446	114P	7	4152244P3	97424	114Q	21
4149506G61	24446	114P	30	4156505P1	24446	114P	68
4149534G1	24446	114P	89	4156505P1	24446	114Q	51
4149534G2	24446	114P		4156540P1	24446	114P	23
4149534G4	24454	114Q	65	4156571P1	24446	114P	96
4149560P1	24446	114P	13	4156571P1	24446	114Q	77
4149562P3	24446	114P	9	416-1S58	99321	79	
4149627P3	24446	114P	97	416-1S58	99321	80	1
4149651G2	24446	114P	40	416-1S58	99321	81	1
4149651G4	24454	114Q	22	416453	66640	190A	23
4149652G1	24446	114P	67	417972	66640	187	38
4149652G2	24446	114P	62	418FCHH	40920	96	26
4149652G3	97424	114Q	46	41814	62983	125B	18
4149652G4	97424	114Q	42	4198		KITS	
4149653G3	24454	114Q	38	4198	11599	175H	40
4149653G4	24446	114P	57	42A6504	80049	115	
4149654G2	24446	114P		42D6594-2	80049	F2	6
4149654G4	24446	114P	36	425	76381	MSUP	
4149654G5	97424	114Q	14	425888	66640	200	37
4149670P1	24446	114P	101	4265-492-5	98625	123	2
4149672P1	97424	114P	71	426736	66640	208	
4149672P2	24454	114Q	47	426951	66640	190A	24
4149674P1	24446	114P	85	426994	66640	208	
4149674P3	97424	114Q	58	426995	66640	208	
4149710G1	24446	114P	60	426996	66640	208	
4149710G2	97424	114Q	39	426997	66640	208	
4149770P1	24454	114P	14	426998	66640	208	
4149770P1	24454	114Q	7	426999	66640	208	
4149770P10	97424	114Q		427000	66640	208	
4149770P2	24446	114P	15	427004	66640	208	
4149770P3	24446	114P		427432N1	66640	190	
4149770P3	24446	114Q		427432N11	66640	190	
4149770P4	24446	114P		427432N8	66640	190	
4149770P5	24454	114Q	8	427585	66640	187	
4150-3B3	19315	11		428214	66640	205	
4150-3B3	19315	77		428217	66640	203	3
4152030P1	97424	114P	64	428219	66640	205	6
4152030P2	24446	114Q	44	428234	66640	205	23
4152079P1	24446	114P	99	428251	66640	190	48
4152079P2	97424	114P	56	428252	66640	190	51
4152079P3	24454	114Q	69	428282	66640	207	
4152079P4	24454	114Q	23	428300	66640	190	52
4152080P1	97424	114P	100	428301	66640	190	49
4152080P1	97424	114Q	20	428332N1	66640	204	
4152093P1	97424	114P	48	428332N2	66640	204	
4152093P1	97424	114Q	33	428373	66640	203	
4152097P1	24446	114P	98	428402	66640	190A	
4152097P1	24446	114Q	75	428403	66640	190A	7
4152097P2	24446	114P	45	428413	66640	190A	
4152097P2	24446	114Q	32	428414	66640	190A	6
4152101P2	97424	114P	2	428492	66640	206	63
4152112G1	24446	114P	93	428589N1	66640	191	
4152112G1	24446	114Q	73	428589N4	66640	191	
4152114G1	24446	114P	92	428589N6	66640	191	1
4152114G1	24446	114Q	72	428589N7	66640	191	2
4152116P1	24446	114P	74	428590N1	66640	183A	
4152116P1	24446	114P	84	428590N2	66640	183A	
4152116P1	24446	114Q	64	428590N3	66640	192	1
4152116P2	24446	114Q	61	428590N3	66640	183A	

REFERENCE NUMBER	MFG CODE	FIG NUMBER	ITEM NUMBER	REFERENCE NUMBER	MFG CODE	FIG NUMBER	ITEM NUMBER
428590N4	66640	193	1	430997	66640	210	21
428590N4	66640	183A		430998	66640	210	23
428613	66640	205	1	43101-37		KITS	
428630	66640	194	12	431011	66640	193	8
42864	62893	125B	31	431344	66640	202A	11
428940	66640	188		431347	66640	202A	
429039	66640	207		431349	66640	199	12
429055	66640	207		431779	66640	183A	
429100	66640	206	54	431788		KITS	
429101	66640	206	59	43193	86263	A24	4
42915	62983	125B		432097	66640	190	
429191	66640	205	15	432152	66640	200	
429197	66640	200		432195	66640	190	67
429199N1	66640	190	9	432291	66640	208	
429199N11	66640	190	12	432299	66640	215	8
429199N2	66640	190	8	432699	66640	195	1
429199N3	66640	190	7	432765	66640	202A	
429199N7	66640	190	11	432766	66640	202A	1
429199N8	66640	190	10	432767	66640	202A	6
429208	66640	209	1	432810	66640	199	5
429208	66640	183A	20	432818	66640	199	
429286	66640	207	42	432824	66640	198	1
429287	66640	200	34	432908	66640	206	1
429654	66640	200	48	432908	66640	183A	17
429838	66640	183A		432932	66640	190	
429852	66640	191	21	433468	66640	214	
429860N	66640	188		433472Y10	66640	190	
429860N3	66640	188	49	433472Y11	66640	190	
43D22262	80049	F1	8	433472Y3	66640	190	
430025	66640	198		433472Y4	66640	190	
430027	66640	207		433472Y5	66640	190	
430029	66640	190		433472Y6	66640	190	
430033	66640	190	53	433472Y7	66640	190	
430034	66640	207		433472Y8	66640	190	
430035	66640	207	28	433472Y9	66640	190	6
430037	66640	207		433474	66640	183A	
430040	66640	190	50	433493	66640	190	
430041	66640	186		433498	66640	190	
430041N2	66640	186	11	433551N2	66640	188	
430043	66640	198	24	433578	66640	190	
430048	66640	197	1	433607	66640	190	
430048	66640	183A		433621	66640	194	1
430049	66640	196	1	433621	66640	183A	
430049	66640	183A		433647	66640	187	7
430051	66640	198		433651	66640	190	
430054	66640	210	13	433664	66640	190	
430055	66640	198		433664Y1	66640	190	
430056	66640	198		433664Y2	66640	190	
430058	66640	215		433705	66640	184	20
430058	66640	183A		433714	66640	188	
430059	66640	210	27	433785N2	66640	188	
430060	66640	204	14	433849	66640	183A	
430062	66640	202A	13	433903	66640	214	5
430064	66640	183A		433921	66640	200	1
430066	66640	198		433921	66640	183A	11
430067	66640	198		433965	66640	189	1
430068	66640	198		433965	66640	183A	6
430069	66640	198		433985	66640	188	
430071	66640	195		434003	66640	208	
430073	66640	210	37	434004	66640	208	
430079N2	66640	188					
430079N3	66640	188	45	434025	66640	188	
430082	66640	188		434027	66640	188	
430481	66640	200		434044	66640	188	
43052-2-81S	98625	76	37	434056	66640	188	
430523	66640	192	8	434060N2	66640	188	7
430541	66640	208		434062	66640	188	
430863	66640	190		43413-5		KITS	
430872	66640	184		434141	66640	190	
430929	66640	200		43585	62983	125B	20
430996	66640	210	22	43586	62983	125B	

REFERENCE NUMBER	MFG CODE	FIG NUMBER	ITEM NUMBER	REFERENCE NUMBER	MFG CODE	FIG NUMBER	ITEM NUMBER
43593	62983	125B		4720EG003-4C0140	81996	110	66B
43594	62983	125B		4720EG003-4C0140	81996	215	1
43595	62983	125B			81996		
43596	62983	125B			81996	1	
43597	62983	125B		4720EG003-4C0170	81996	181	
43598	62983	125B					
43599	62983	125B	21				
43600	62983	125B	28	4720EG003-4C0200	81996	110	66A
43601	62983	125B	22	4720EG003-4C0210	81996	167	
43603	62983	125B	33	4720EG003-4C0220	81996	173	26
43626	79500	125B	34	4720EG003-4C0220	81996	173	30
44F2-3	86009	125B	13	4720EG003-4C0230	81996	173	19
44G5478	80049	F1	9	4720EG003-4C0260	81996	173	10
442001	75915	130		4720EG003-4C0270	81996	173	
442001	75915	138		4720EG003-4C0390	81996	77	
446101	81579	133	10	4720EG003-4C0450	81996	111	13
446101	76220	BULK		4720EG003-5C0170	81996	173	5
44689	62983	125B	11	4720EG003-5C0180	81996	173	
44689	62983	125B	15	4720EG003-6C0150	81996	181	23
45A28	58588	123		4720EG003-6C0160	81996	181	
450694	77294	114		4720EG003-6C0170	81996	32	180
4508-18		KITS		4720EG003-6C0230	81996	32	181
4508-18	08484	125A		4720EG003-6C0250	81996	32	182
4508-61	08484	125A	55	4720EG003-6C0370	81996	144	10
45197-6		KITS		4720EG003-6C0490	81996	144	
45259400110	89944	114L	55	4720EG003-6C0530	81996	77	8
45517		KITS		4720EG003-6C0540	81996	77	1
45517-6		KITS		4720EG003-8C0130	81966	32	156
46071630040	89944	114D		4720EG003-8C0140	81996	32	24
46220640010	89944	114L	47	4720EG003-8C0140	81996	32	29
4624		KITS		4720EG003-8C0160	81996	181	
4624	11599	175H	26	4720EG003-8C180	81996	32	
46264	62893	125B	26	4720EG004-4C0170	81996	124	71
46701	62983	125B	5	4720EG006-8C0170-150	81996	181	16
46702	62983	125B	30	4720EG007-10-0460	81996	144	7
46707	62983	125B	16	4720EG007-12-0240	81996	77	25
46750	62983	125B	27	4720EG007-12-0280	81996	84	
468D25	66640	190	69	4720EG007-16-0410	81996	173	21
468D6	66640	184	3	4720EG007-16Z024	81996	77	
47-711-018-2	97499	113		4720EG007-16Z0250	81996	74	1
47-711-018-2	97499	114		4720EG007-6C0440	81996	145	4
47B38P	35918	113		4720EG007-8C0510	81996	144	1
47B38P	35913	114		4720EG007-8C0510	81996	145	
47B38P2	35918	113		473	76381	MSUP	
47B38P2	35918	114		4750	72914	114	26
47B51	35918	113		47640	70270	178	
47B51	35918	114		477KN43	89944	114A	13
471-1INCH	76381	MSUP		4790	72914	113	10
472EG003-4C0060	81996	145	17	4790	72914	114	13
472K950B	89944	114A		4790	72914	114	39
4720EG002-4C0050	81996	145	153	48021	11599	KITS	
4720EG002-4C0130	81996	144		48021	11599	175H	
4720EG002-4C0130	81996	145	172	48022	11599	KITS	
4720EG003-10-0110	81996	83	2	48022	11599	175H	
4720EG003-10-0350	81996	83	1	48022	11599	KITS	
4720EG003-10-0350	81996	84	1	48079	62983	125B	
4720EG003-12-0140	81996	84		481	49944	132	105
4720EG003-12-0170	81996	84	8	481	49944	137	14
4720EG003-12-0270	81996	84	7	481	49944	137	21
4720EG003-12-0310	81996	83	5	481	49944	137	31
4720EG003-12-0330	81996	182		481	49944	137	37
4720EG003-12-0370	81996	182	6	483548-711	79089	191	25
4720EG003-16Z0130	81996	77	29	483548-711	79089	191	6
4720EG003-16Z0210	81996	173	24	483548-711	79089	194	2
4720EG003-3C0110	81996	174	14	486009-6	56232	113F	162
4720EG003-4C0100	81996	32	186	48637	62983	125B	35
4720EG003-4C0100	81996	144	58	4885	72914	113	
4720EG003-4C0100	81996	145	132	4885	72914	114	
4720EG003-4C0100	81996	111	21	49C7573A	35510	138	
4720EG003-4C0110	81996	165	5	493D2	66640	190	4
4720EG003-4C0130	81996	145		49431	62983	125B	29

REFERENCE NUMBER	MFG CODE	FIG NUMBER	ITEM NUMBER	REFERENCE NUMBER	MFG CODE	FIG NUMBER	ITEM NUMBER
49681		KITS		5043H2	66640	207	12
5-1638-10	45681	78A	8	5043H3	66640	200	22
5-2049-1	45681	78A	17	5043J2	66640	190	
5-3145-2	45681	78A	2	5043J2	66640	207	
5L2820	82833	55	3	5043J3	66640	200	
5L2820-3	82833	55		5043S2	66640	190	
5L2820-5	82833	56		5043S2	66640	207	
5PA2	54835	104	18	5043S3	66640	200	
5PA2	54835	104	50	5044D3	66640	190	
5PA2	54835	104	78	5044H3	66640	190	
5PA2	54835	104	94	5044J3	66640	190	
50-320116-4	70898	109		5044S3	66640	190	
50D3770	80049	115	36	505		KITS	
500-1073-003	13499	113F	160	505	11599	175H	5
5000-5	79136	207		505269	02106	A9	3
5000-50SMF	79136	81A	30	505275	02106	117	31
5000-56	79136	207	46	505322	02106	76	44
5000-75	00736	28	14	505436	02106	A7	6
5000-87SN	19315	113E	158	505450	02106	43	9
50071630021	89944	114B	21	5065D24	66640	206	
5009	78710	109		5068D1	66640	187	23
501D7601-030	12955	200	47	5068D1	66640	187	28
50104-3	80477	56	3	5072D82	66640	188	34
502254	80510	114E	50	508		KITS	
502254	80510	114F	88	508	11599	175H	4
502254	80510	114S	102	51A05	58588	123	
50289300020	89944	114L	11	51A66	58588	123	
50289320010	89944	114L	57	51A93	58588	124	81
503	11599	175H	36	51J3817	80049	115	63
5036		KITS		510	11599	175H	9
5036	87915	175B	25	5100-50		KITS	
5040-1	95712	135		51022		KITS	
5042H2	66640	190	35	510614	73842	165	
5042H2	66640	190	60	510779-23	73842	162B	
5042H2	66640	198	10	5108-87	79136	178	33
5042H2	66640	206	35	511810		KITS	
5042H2	66640	207		511810	73842	162A	14
5042H3	66640	184	33	511811		KITS	
5042H3	66640	190	37	511811	73842	162A	13
5042H3	66640	198	11	511812A		KITS	
5042H3	66640	206	36	511812A	73842	162A	12
5042H3	66640	207	13	511820-7		KITS	
5042H3	66640	208	5	511820-7	73842	84A	8
5042H4	66640	200	21	511820-7	73842	84B	11
5042H7	66640	198	12	511820-7	73842	162A	8
5042J2	66640	190		511846-4		KITS	
5042J2	66640	198		511921	73842	162A	10
5042J2	66640	206		512054	73842	84A	18
5042J2	66640	207		512054	73842	84B	20
5042J3	66640	184		512054	73842	162A	20
5042J3	66640	190		51249	61864	169	24
5042J3	66640	198		5133-9	79136	113E	127
5042J3	66640	206		5133-9	79136	113F	48
5042J3	66640	207		51338	61864	130	64
5042J3	66640	208		5140-534016		KITS	
5042J4	66640	200		515S	45225	A25	1
5042J7	66640	198		51610-23184-2	78286	16	101
5042K4	66640	200		51965		KITS	
5042S2	66640	190		52-012-062-0312		KITS	
5042S2	66640	198		52-018-078-0625		KITS	
5042S2	66640	206		52-018-078-0625	72962	125A	42
5042S2	66640	207		52-028-125-1125		KITS	
5042S3	66640	184		52-032-156-0437		KITS	
5042S3	66640	190		52-077-375-1750		KITS	
5042S3	66640	198		52-200000	31435	175	
5042S3	66640	206		52-200007	31435	175	
5042S3	66640	207		52-200007	31435	KITS	
5042S3	66640	208		52-200007	31435	175D	
5042S4	66640	200		52-510008	31435	KITS	
5042S7	66640	198		52-510009	31435	KITS	
5043H2	66640	190	38	52A02	58588	123	

REFERENCE NUMBER	MFG CODE	FIG NUMBER	ITEM NUMBER	REFERENCE NUMBER	MFG CODE	FIG NUMBER	ITEM NUMBER
52N1610-054	72962	91					
5200		KITS					
52071630010	89944	114B	68				
52071630030	89944	114B	76				
52220600010	89944	114L	10	550A	61864	44	3
52220640020	89944	114L	44	550645-4	06840	85	
52480SA	40266	E95		550645-4-1	06840	85	26
5252	75361	74	77	550743	06840	85	26F
5252	75361	75	93	550744-4	06840	85	26H
5260		KITS		5513599	72560	76B	5
5260	87915	175B	33	555-00379-0004	96906	90	16
52615	81321	103	3	555-3912	71688	11	10
528D1	66640	202A	2	559	61864	42	
528D3	66640	200		559	61864	45	31
53X2708	73680	18		559	61864	46	21
53X3275	73680	23		559	61864	49	42
530-2SS	19315	113E	152	559	61864	115	85
530-2SS	19315	113E	269	56A14	58588	123	
530-4SS	19315	113E	15	56D71	66640	198	5
530-4SS	19315	113E	5	56E589	99238	117	1
530-4SS	19315	113E	92	56E589	99238	118	1
530884G	73842	162	38	56026	05259	A25	
530884G	73842	162B		56071630010	89944	114B	81
530886SG	73842	162	42	56071630020	89944	114B	86
530886SG	73842	162A		56075-1	02259	A25	
5310H34-003	81996	183A		5610-24	72914	114	11
5343464		KITS		5610-24	72914	114	36
5343536		KITS		56220640010	89944	114L	29
5343971		KITS		5632FCHH	40920	96	21
5344309		KITS		5632FCHH	40920	106	45
5360	87915	175B	34	5690-3	87915	175B	39
5360739		KITS		57A3A011	80064	130	
5364856		KITS		57A3A011	80064	131	
5364857		KITS		57A3A011	80064	132	
5364858		KITS		57071630010	89944	114B	95
5364859		KITS		57071630020	89944	114B	84
5364945		KITS		57289310010	89944	114L	18
5364946		KITS		58B001-1	02259	A25	4
5365		KITS		58B002-1	05259	BULK	
5365	87915	175B		58B002-2	05259	BULK	
5365250		KITS		58B002-3	05259	BULK	
536869		KITS		58B002-5	05259	BULK	
5374	75345	BULK		58B002-6	05259	BULK	
5378727		KITS		58B015-1	05259	BULK	
5387073		KITS		58L18	77122	162A	24
5389944		KITS		58071630010	89944	114B	15
54H19651	80049	115	34	58259400170	89944	114L	56
541-00429-0504	96906	55		586BK0153	89944	113	
545-38	89944	114D	74	586BK1-0153	89944	113	
545-40	89944	114B	67	586BK4-0153	89944	113	
545-40	89944	114D	73	59-018-078-0500	72962	54	54
545-62	89944	114D	35	59-028-125-0875		KITS	
545-66	89944	114D		590BK48	89944	114B	5
545-916	89944	114D	108	590BK48	89944	114D	5
545-918	89944	114B	57	590BK48	89944	114L	12
545-918	89944	114D	64	590BK48-2	89944	114D	
545-919B6	89944	114B	22	590BK48-2	89944	114L	
545-919B6	89944	114D	24	590BK48-3	89944	114D	
545-919B7	89944	114D		590BK48-3	89944	114L	
5463010P1	24446	114Q	9	591-40-1	70236	54	
5463109P1	97424	114Q		591-40-1	70236	54	61
5468434G2	24446	114Q	50	59388		KITS	
5468652G1	97424	114P	76	594000-1	70210	74	
5468652G2	97424	114Q	52	594000-1	70210	75	
5473	03488	BULK		594000-1	79210	KITS	
5473	75511	BULK		594001-1	70210	74	
5482		KITS		594001-1	70210	75	
5482	11599	175H	30	594001-1	70210	KITS	
5495	87915	175B	27	594002-1	70210	74	
5497	87915	175B	6	594002-1	70210	75	
5498		KITS		594002-1	70210	KITS	

REFERENCE NUMBER	MFG CODE	FIG NUMBER	ITEM NUMBER	REFERENCE NUMBER	MFG CODE	FIG NUMBER	ITEM NUMBER
6BIC00X0B		KITS		636-172	71688	130	7A
600-001-10		KITS		63669	66640	200	42
6000	87915	KITS		63669	66640	206	52
6000	87915	175B		63684	66640	203	11
6000-3-1		KITS		639-13	89944	114B	77
603654	56232	114		639-13	89944	114D	84
6085D5	66640	190	68	639-17	89944	114B	91
6087		KITS		639-19	89944	114B	69
6087	19315	175A	104	639-19	89944	114D	98
60975A	40266	E95		639-20	89944	114B	70
61-297	13027	150	61	639-20	89944	114D	99
61-31	13027	151	28	639-21-2	89944	114B	27
61-334	13027	21	41	639-21-2	89944	114D	29
61-40106-0316	89944	BULK		639-27B	89944	114D	89
61-40110-0012	89944	BULK		639-38	89944	114B	66
61018050208	89944	114L	2	639-38	89944	114D	72
6111	81349	113B	2	639-39	89944	114D	90
6112	81349	113B	3	639-6	89944	114D	83
611425	83616	BULK		639-912	89944	114D	
6122D2	66640	206	5	639-912B	89944	114B	79
61235	66640	199	13	639-912B	89944	114D	86
614K28	89944	114D	93	639-913	89944	114D	88
614K61	89944	114B	38	639-923	89944	114D	
614K61	89944	114D	40	639K03	89944	113	
614K89	89944	114D	75	639K03	89944	114	
614K90	89944	114D	92	63997	66640	184	1
614K91	89944	114D	94	64-28	89944	114D	105
614K92	89944	114D	91	640-1-13		KITS	
614002		KITS		640-1-16	70236	33	
61401050218	89944	114D		640-1-16	70236	KITS	
61401050430	89944	114D		640-1-17	70236	33	
61401060316	89944	114L	6	640-1-17	70236	KITS	
61401060318	89944	114L	7	640-1-6		KITS	
61401060320	89944	114A	6	640-2-10		KITS	
61401060331	89944	114D		640-2-11		KITS	
61401060333	89944	114D		640-2-12		KITS	
61401060344	89944	114L	8	642K950B	89944	114A	19
61401060426	89944	114D		642K950B	89944	114C	21
61401100618	89944	114D		64280	66640	208	58
61401120418	89944	114D		644006	99551	KITS	
61401130014	89944	114L	86	644006	99551	175A	
61401130214	89944	114L	88	644007	99551	KITS	
61401130620	89944	114L	87	644007	99551	175A	
61430050006	89944	114D	61	644015	99551	KITS	
61430050006	89944	114D	63	644015	99551	175A	
61430050006	89944	114L	67	645-10	19315	114S	9
61430060006	89944	114D		645K15D	89944	BULK	
61691	62983	125B	7	645K6-2	89944	BULK	
61701020003	89944	114D		645K6-2	89944	114B	7
61701020003	89944	114L	9	645K6-2	89944	114D	7
61715100003	89944	114D		645K6-2	89944	114L	14
617908	56232	109	28	64602N1	66640	184	13
61951	66640	205		64603	66640	184	17
61990	66640	208	79	6465J		KITS	
6284407	07878	115		6465J	97577	19	27
62008	79150	16	44	6466J		KITS	
62008	79150	16	90	6466J	76260	19	25
62338	66640	201	5	6467J		KITS	
626655-45	06848	214A	485	6467J	97577	19	24
63C65	58588	KITS		64730	66640	190A	
63C65	58588	123A		648112-4		KITS	
63X1258	73680	158	63	64962	66640	190A	38
63X233	73680	BULK		65A58		KITS	
63X6599R2	73680	178		65A58	90166	181A	38
63X67	73680	25		65X143	73680	25	39
630-12	45225	A1	3	65X1471	73680	25	
630-3	45225	A25	2	65X321	73680	158	
6335	03488	BULK		65X67	73680	25	41
634D2	66640	200		650-4034	71688	138	44
634H2	66640	200	23	651-10-2	07915	85B	20
634S2	66640	200		651-40-1	70236	85	

REFERENCE NUMBER	MFG CODE	FIG NUMBER	ITEM NUMBER	REFERENCE NUMBER	MFG CODE	FIG NUMBER	ITEM NUMBER
653278	56232	109		667258-21	56232	114	
65678	66640	190A	3	66779	66640	208	4
65679	66640	190A	2	67A10		KITS	
65852	66640	208	19	67A10	90166	181A	44
65855	66640	208	22	67A1004-4	90166	181A	
65857	66640	208	25	67A1005-4	90166	181A	
65858	66640	208	20	67A1057	90166	181A	34
659597	56232	109		67A1058	90166	181A	33
6603-2ZJ1HT2	52676	123B		67A1059	90166	181A	32
661KN39	89944	114B	63	67A1060	90166	181A	30
661KN39	89944	114D	69	67A1068	90166	181A	23
661KN62	89944	114B	55	67A1116	90166	181A	31
661KN62	89944	114D	62	67A1123		KITS	
66185	66640	208	61	67A1123	90166	181A	68
66327	66640	201	14	67A1183-4		KITS	
66374	66640	199	18	67A1183-4	90166	181A	
66374Y10	66640	199		67A1387		KITS	
66374Y20	66640	199		67A1387	90166	181A	50
66374Y30	66640	199		67A358		KITS	
66376	66640	201	13	67A358	90166	181A	46
66376	66640	BULK		67A370		KITS	
66376Y1	66640	201		67A370	90166	181A	11
66376Y10	66640	201		67A371	43491	181A	19
66376Y11	66640	201		67A372	90166	181A	15
66376Y12	66640	201		67A377	90166	181A	60
66376Y13	66640	201		67A378	90166	181A	63
66376Y14	66640	201		67A386		KITS	
66376Y15	66640	201		67A386	90166	181A	26
66376Y16	66640	201		67A388	90166	181A	25
66376Y17	66640	201		67A389		KITS	
66376Y18	66640	201		67A39	90166	181A	39
66376Y19	66640	201		67A393		KITS	
66376Y2	66640	201		67A393	90166	181A	67
66376Y20	66640	201		67A395	43491	181A	20
66376Y21	66640	201		67A396	90166	181A	62
66376Y22	66640	201		67A397	90166	181A	47
66376Y23	66640	201		67A398		KITS	
66376Y24	66640	201		67A398	90166	181A	56
66376Y25	66640	201		67A399	90166	181A	45
66376Y26	66640	201		67A40	90166	181A	40
66376Y27	66640	201		67A409	90166	181A	18
66376Y28	66640	201		67A419	90166	181A	55
66376Y29	66640	201		67A420	90166	181A	43
66376Y3	66640	201		67A422	90166	181A	35
66376Y30	66640	201		67A425	90166	181A	13
66376Y31	66640	201		67A526	90166	181A	71
66376Y32	66640	201		67A638		KITS	
66376Y33	66640	201		67A638	90166	181A	54
66376Y34	66640	201		67A639		KITS	
66376Y35	66640	201		67A639	90166	181A	52
66376Y36	66640	201		67A640		KITS	
66376Y37	66640	201		67A640	90166	181A	51
66376Y38	66640	201		67A641		KITS	
66376Y39	66640	201		67A641	43491	181A	49
66376Y4	66640	201		67A7	90166	181A	42
66376Y40	66640	201		67B1003-7		KITS	
66376Y41	66640	201		67B1003-7	90166	181A	
66376Y42	66640	201		67B1006-8	90166	181A	
66376Y43	66640	201		67B401	90166	181A	36
66376Y44	66640	201		67B416	90166	181A	48
66376Y5	66640	201		67C411	90166	181A	58
66376Y6	66640	201		67WB200	43491	32	
66376Y7	66640	201		67WB200	90166	181A	
66376Y8	66640	201		67WB200-1	43491	32	
66376Y9	66640	201		67WB200-1	90166	181A	
664234	56232	113		67WB200-3	43491	32	174
664234	56232	114		67WB200-3	90166	181	30
66449	66640	208	62	67WB200-3	90166	181A	
66450	66640	208	29	670545	56232	113F	227
66451	66640	208	26	671	61864	115	89
66634	62983	125B	24	671	61864	115	91

REFERENCE NUMBER	MFG CODE	FIG NUMBER	ITEM NUMBER	REFERENCE NUMBER	MFG CODE	FIG NUMBER	ITEM NUMBER
671-71	89944	114C	76	671CPU19-015D	89944	114A	
671-73D	89944	114A	68	671CPU3	89944	114A	
671-73D2	89944	114C	54	671CPU8-030	89944	114	
671-73D2	89944	114L	68	671CPU8-030D	89944	114	
671-74B	89944	114A	86	671CPX037-1	89944	114A	
671-74B	89944	114C	61	671CPX10-051	89944	114	
671-87B	89944	114A	72	671CPX4-037	89944	114	
671-87B	89944	114C	53	671CPX4-037	89944	114A	
671-87B	89944	114L	69	671CPX4-037D	89944	114	
671-88	89944	114L	92	671CPX4-037D	89944	114A	
671-90B	89944	114C	77	671CPX4-038	89944	114	
671-90B	89944	114L	66	671CPX4-038	89944	114A	
671-901	89944	114C	4	671CPX4-038D	89944	114	
671-915	89944	114C	48	671CPX4-038D	89944	114A	
671-916	89944	114C		671CP19-017D	89944	114	
671-917	89944	114C	70	671CP19017	34237	114	
671-920	89944	114C	40	671CP8-016	89944	114	
671-921	89944	114C	41	671CP8-016	89944	114A	
671-924	89944	114A	83	671CP8-016D	89944	114	
671-924	89944	114C	59	671CP8-016D	89944	114A	
671-929	89944	114C	71	671CP917	89944	114C	
671BK01	89944	114		671C133	89944	114B	20
671BK01D	89944	114		671C133	89944	114D	
671BK010	89944	114		671C134	89944	114B	19
671BK010	89944	114C		671C134	89944	114D	
671BK010D	89944	114		671EPX4-037D	89944	114	
671BK010D	89944	114C		671K01D	89944	114	
671BK010DL	89944	114		671K03	89944	114	
671BK010M	89944	114		671K03	89944	114C	
671BK011	89944	114		671K03D	89944	114	
671BK011	89944	114C		671K03D	89944	114C	
671BK011D	89944	114		671U1B	89944	114A	
671BK011D	89944	114C		67167	66640	200	
671BK03	89944	114		67169	66640	200	40
671BK03D	89944	114		67171	66640	200	43
671BK07	89944	114		67173	66640	200	
671BK07C	89944	114		671887	56232	113F	155
671BK07CD	89944	114		672516	56232	113F	147
671BK07D	89944	114		672517	56232	113F	87
671BK07D	89944	114C		672615	56232	113F	38
671BK1D	89944	114A	47	672681	56232	113F	42
671BK900C	89944	114		673391	56232	113	
671BK900CD	89944	114		673391	56232	114	
671BK903B	89944	114C		673391	56232	113F	1
671BU010	89944	114		673447	56232	109	
671BU010	89944	114C		67369	66640	201	2
671BU010D	89944	114		673787	56232	113F	257
671BU010D	89944	114C		67410	66640	206	58
671BX010D	34237	114		67410	66640	206	68
671B71	89944	114C		675313B	56232	114	
671B85	89944	114C		67575	66640	205	
671B90B	89944	114A	65	676697	56232	113F	192
671B901	89944	114C		679517	56232	113F	22
671B920	89944	114C		67983	62983	125B	
671B921	89944	114C		67984	92683	125B	25
671B929	89944	114C		68	77445	190A	8
671CKL010	89944	114		68A75	58588	123A	41
671CK010	34237	114		6800-064	80539	179	13
671CK010D	89944	114		680788	56232	113F	
671CK010D	89944	114C		68332	66640	189	10
671CK3C	89944	114A		68335	66640	198	33
671CK4B	89944	114A	4	68336	66640	198	31
671CK902B	89944	114A	5	68415	66640	189	
671CLU4-035	89944	114		684471-6	56232	113	
671CLU4-035D	89944	114		684471-6	56232	114	
671CLU4-035D	89944	114A		68498	66640	190	43
671CLU4-038	34237	114		68498Y1	66640	190	
671CLU4-038D	89944	114		68498Y2	66640	190	
671CPU19-015	89944	114		68498Y3	66640	190	
671CPU19-015	89944	114A		68505	62983	125B	
671CPU19-015D	89944	114		68531	66640	188	37

REFERENCE NUMBER	MFG CODE	FIG NUMBER	ITEM NUMBER	REFERENCE NUMBER	MFG CODE	FIG NUMBER	ITEM NUMBER
671-71	89944	114C	76	671CPU19-015D	89944	114A	
671-73D	89944	114A	68	671CPU3	89944	114A	
671-73D2	89944	114C	54	671CPU8-030	89944	114	
671-73D2	89944	114L	68	671CPU8-030D	89944	114	
671-74B	89944	114A	86	671CPX037-1	89944	114A	
671-74B	89944	114C	61	671CPX10-051	89944	114	
671-87B	89944	114A	72	671CPX4-037	89944	114	
671-87B	89944	114C	53	671CPX4-037	89944	114A	
671-87B	89944	114L	69	671CPX4-037D	89944	114	
671-88	89944	114L	92	671CPX4-037D	89944	114A	
671-90B	89944	114C	77	671CPX4-038	89944	114	
671-90B	89944	114L	66	671CPX4-038	89944	114A	
671-901	89944	114C	4	671CPX4-038D	89944	114	
671-915	89944	114C	48	671CPX4-038D	89944	114A	
671-916	89944	114C		671CP19-017D	89944	114	
671-917	89944	114C	70	671CP19017	34237	114	
671-920	89944	114C	40	671CP8-016	89944	114	
671-921	89944	114C	41	671CP8-016	89944	114A	
671-924	89944	114A	83	671CP8-016D	89944	114	
671-924	89944	114C	59	671CP8-016D	89944	114A	
671-929	89944	114C	71	671CP917	89944	114C	
671BK01	89944	114		671C133	89944	114B	20
671BK01D	89944	114		671C133	89944	114D	
671BK010	89944	114		671C134	89944	114B	19
671BK010	89944	114C		671C134	89944	114D	
671BK010D	89944	114		671EPX4-037D	89944	114	
671BK010D	89944	114C		671K01D	89944	114	
671BK010DL	89944	114		671K03	89944	114	
671BK010M	89944	114		671K03	89944	114C	
671BK011	89944	114		671K03D	89944	114	
671BK011	89944	114C		671K03D	89944	114C	
671BK011D	89944	114		671U1B	89944	114A	
671BK011D	89944	114C		67167	66640	200	
671BK03	89944	114		67169	66640	200	40
671BK03D	89944	114		67171	66640	200	43
671BK07	89944	114		67173	66640	200	
671BK07C	89944	114		671887	56232	113F	155
671BK07CD	89944	114		672516	56232	113F	147
671BK07D	89944	114		672517	56232	113F	87
671BK07D	89944	114C		672615	56232	113F	38
671BK1D	89944	114A	47	672681	56232	113F	42
671BK900C	89944	114		673391	56232	113	
671BK900CD	89944	114		673391	56232	114	
671BK903B	89944	114C		673391	56232	113F	1
671BU010	89944	114		673447	56232	109	
671BU010	89944	114C		67369	66640	201	2
671BU010D	89944	114		673787	56232	113F	257
671BU010D	89944	114C		67410	66640	206	58
671BX010D	34237	114		67410	66640	206	68
671B71	89944	114C		6753138	56232	114	
671B85	89944	114C		67575	66640	205	
671B90B	89944	114A	65	676697	56232	113F	192
671B901	89944	114C		679517	56232	113F	22
671B920	89944	114C		67983	62983	125B	
671B921	89944	114C		67984	92683	125B	25
671B929	89944	114C		68	77445	190A	8
671CKL010	89944	114		68A75	58588	123A	41
671CK010	34237	114		6800-064	80539	179	13
671CK010D	89944	114		680788	56232	113F	
671CK010D	89944	114C		68332	66640	189	10
671CK3C	89944	114A		68335	66640	198	33
671CK4B	89944	114A	4	68336	66640	198	31
671CK902B	89944	114A	5	68415	66640	189	
671CLU4-035	89944	114		684471-6	56232	113	
671CLU4-035D	89944	114		684471-6	56232	114	
671CLU4-035D	89944	114A		68498	66640	190	43
671CLU4-038	34237	114		68498Y1	66640	190	
671CLU4-038D	89944	114		68498Y2	66640	190	
671CPU19-015	89944	114		68498Y3	66640	190	
671CPU19-015	89944	114A		68505	62983	125B	
671CPU19-015D	89944	114		68531	66640	188	37

REFERENCE NUMBER	MFG CODE	FIG NUMBER	ITEM NUMBER	REFERENCE NUMBER	MFG CODE	FIG NUMBER	ITEM NUMBER
68533	66640	186	1	713490	56232	113F	157
68561	66640	198	29	713605	56232	113F	161
68586	66640	200	12	714-41	89944	114D	49
686086	56232	113F		7142-114		KITS	
686088	56232	113F	255	714823	56232	113F	251
68610	66640	205		714906	56232	113F	245
68610	66640	205	26	714907	56232	113F	232
686530	56232	113F		714924	56232	113F	107
686531	56232	113		714932	56232	113F	108
686531	56232	114		716-10B	89944	114B	16
686531	56232	113F		716-10B	89944	114D	19
686532	56232	113F		716-11	89944	114D	17
68668N3	66640	205		716-12	89944	114D	
687	79300	113		716-13	89944	114D	
687	79300	114		716-14	89944	114B	43
68796	66640	214	6	716-14	89944	114D	46
688	92026	118		716-18B	89944	114B	10
68816	66640	190A		716-18B	89944	114D	10
6885-20M	38056	85	19	716-19	89944	114D	13
6905	72914	128A	41	716-20	89944	114D	
69222	66640	184	19	716-30	89944	114D	12
7-1043-3	45681	78A	4	716-31	89944	114B	36
7-1746-27	45681	78A	10	716-31	89944	114D	38
7-1746-28	45681	78A	9	716-35	89944	114B	48
7-5WHFDL	03496	123	24	716-35	89944	114D	55
7-5WHFDR	03496	123		716-39	89944	114B	50
7-743-7	45681	78A	5	716-39	89944	114D	57
7-743-8	45681	78A	11	716-4	89944	114D	36
7-837-905	80234	120	1	716-40B	89944	114B	46
70S14	66640	184		716-40B	89944	114D	53
70510		KITS		716-42	89944	114D	52
70510	93575	175A	3	716-44	89944	114D	45
709-5B	89944	114L	93	716-47	89944	114D	14
709-6	89944	114A	91	716-49	89944	114D	48
709-6	89944	114L	63	716-50	89944	114B	87
709-909C	89944	114A	88	716-50	89944	114B	89
709-909C	89944	114L		716-50	89944	114D	102
709-911B	89944	114A	94	716-55	89944	114B	53
709K01	89944	114		716-55	89944	114D	60
709K01D	89944	114		716-6B	89944	114D	16
709K01D	89944	114C		716-7	89944	114B	13
71-63	89944	114B	73	716-7	89944	114D	15
71-63	89944	114D	81	716-8	89944	114D	
71A7056		KITS		716-9	89944	114D	
71A7056	73680	38		716-901B	89944	114D	8
71A7085		KITS		716-903	89944	114D	18
71X7095	73680	BULK		716-904	89944	114D	
711470-1	19315	113E	178	716-905	89944	114D	
711470-3	19315	113E		716-906C	89944	114D	
711472-2	88917	113E		716-906C	89944	114D	
711473-1	19315	113E	61	716-908	89944	114D	95
711684-1	19315	113E	76	716-910	89944	114D	
711684-1	19315	113E	78	716-910B	89944	114B	
711691-1	19315	113E		716-910B	89944	114D	
711696-1	19315	113E	62	716-911	89944	114D	87
711707-1	19315	113E	71	716-912	89944	114B	51
711709-1	19315	113E	20	716-912	89944	114D	58
711709-1	19315	113E	9	716-914	89944	114B	
711850	56232	113F	225	716-914	89944	114D	
712700	19315	113E	2	716-915	89944	114B	42
713113-1	19315	113E	17	716-915	89944	114D	44
713213	56232	113F	146	716-918	89944	114B	31
713414-1	19315	113E	166	716-918	89944	114D	33
713414-1	19315	113E	58	716-920	89944	114B	47
713415-1	19315	113E	285	716-920	89944	114D	54
713423-1	19315	113E	64	716-921	89944	114D	
713426-1	19315	113E		716-945	89944	114B	
713426-2	19315	113E		716-945	89944	114D	
713487	56232	113F	53	716BK036-1	89944	114D	25
713488	56232	113F	28	716BK046-1-1	89944	114D	
713489	56232	113F	27	716BK046-1-2	89944	114D	

REFERENCE NUMBER	MFG CODE	FIG NUMBER	ITEM NUMBER	REFERENCE NUMBER	MFG CODE	FIG NUMBER	ITEM NUMBER
716BK052-1-1	89944	114D		722274-2	19315	113E	191
716BK052-1-2	89944	114D		723465-1	19315	113E	227
716BK17B	89944	114D	11	723465-1	19315	113E	235
716BK5-046	89944	113		724529	56232	113F	
716BK5-046	89944	114		724888-1	19315	113E	288
716BK5-046	89944	114D		726873-4	19315	113E	116
716BK8-036	89944	113		728208-1	19315	BULK	
716BK8-036	89944	114		728208-1	19315	113E	113
716BK8-036	89944	114D		728209-1	19315	113E	118
716BK902	89944	114D		728210-1	19315	113E	120
716BU036-1-1	89944	114D		728211-1	19315	113E	119
716BU036-1-2	89944	114D	27	728211-2	19315	113E	121
716BU1	89944	114D	23	728242-1	19315	113E	
716BU3	89944	114B	1	729004-1	19315	113E	
716BU3	89944	114D	1	729004-1	19315	113E	19
716BU4-052	89944	113		729023-1	19315	113E	
716BU4-052	89944	114		729024-1	19315	113E	53
716BU4-052	89944	114D		729025-1	19315	113E	56
716BU8-036	89944	113		729685-1	19315	113E	1
716BU8-036	89944	114		729702-1	19315	113E	
716BU8-036	89944	114D		730456-1	19315	113E	26
716BU8-050	89944	113		730456-2	19315	113E	
716BU8-050	89944	114		730995-1	19315	113E	
716BU8-050	89944	114D		731	81339	MSUP	
716B16	89944	114B	29	731-10	89944	114B	65
716B16	89944	114D	31	731-10	89944	114D	71
716B4	89944	114D		731-9	89944	114B	64
716B907	89944	114B		731-9	89944	114D	70
716B907	89944	114D		732024-1	19315	113E	192
716B919B1	89944	114D	34	732158-1	19315	113E	212
716B919B2	89944	114D		732253-5	19315	113E	260
716B919B3	89944	114D		732254-2	19315	113E	274
716CU051-1	89944	114B		732263-1	19315	113E	52
716CU051-1	89944	114D		732270-1	19315	113E	
716CU051-1-1	89944	114B	23	732271-1	19315	113E	79
716CU051-1-1	89944	114D		732275-1	19315	113E	87
716CU051-1-2	89944	114B	25	732276-1	19315	113E	85
716CU051-1-2	89944	114D		732277-1	19315	113E	
716CU051-2	89944	114D		732877-1	19315	113E	156
716CU1	89944	114D		733399-1	19315	113E	77
716CU4-052	89944	114D		735145-1	19315	113E	240
716CU4-053	89944	113		735145-2	19315	113E	
716CU4-053	89944	114		735145-3	19315	113E	
716CU4-053	89944	114D		735145-4	19315	113E	
716C4	89944	114B	34	737RM48	81352	76	18
716C4	89944	114D		738-16-10		KITS	
716C5	89944	114D		738-16-10	77820	213B	1
716C7	89944	114B	37	738969-1	19315	113E	
716C7	89944	114D		738969-1	19315	113E	216
716C901	89944	114D		74-13802-3008	89944	114B	80
716C903	89944	114D		740944	19315	113E	131
716C904	89944	114D		740984-1	19315	113E	
716C905	89944	114D		740984-1	19315	113E	211
716K1D	89944	114D		74687		KITS	
716K46B	89944	114D		74687	62983	35A	29
716U03	89944	113		75-5-008	80205	36	14
716U03	89944	114D		75-5-008	80205	36	8
716U03-1	89944	114D		75M193	07835	114E	15
716V03	89944	114		7500-15A5	19315	77	
716071	56232	113F	133	7500-15A5-3A	06840	77	
716161	56232	113F	54	7500-15A5A	19315	77	
717153-1	19315	113E	190	7501-1	80049	74	79
717153-1	19315	113E	195	7501-1	80049	75	95
717253-1	19315	113E	111	75019	98505	123	86
717253-1	19315	113E	39	7521558	00000	BULK	
717449-1	19315	113E		752719-1	19315	113E	141
717450-1	19315	113E	169	752719-2	19315	113E	
717679-1	19315	113E	137	752719-3	19315	113E	
717683-1	19315	113E	133	752719-4	19315	113E	
718027	56232	113F	249	754116-1	19315	113E	145
720754	56232	113F	221	754360-1	19315	113E	57

REFERENCE NUMBER	MFG CODE	FIG NUMBER	ITEM NUMBER	REFERENCE NUMBER	MFG CODE	FIG NUMBER	ITEM NUMBER
754361-1	19315	113E	136	77R4X1E		KITS	
754362-1	19315	113E	143	7700-15A5-1A	06840	77	
754363-1	19315	113E	139	7700-15A5-2	19315	77	
755-16-2-10AF	00502	79	84	770309-1	19315	113E	69
757706-1	19315	113E	277	7706-16-16-1	19315	77	
7609-37A5-1	19315	32		7709-15A5-1	06840	77	
7609-37B5-2	19315	32		7709-15B5-1	02987	77	19
7609-37C5-1	02987	32		77106	75477	123B	20
7609-37D5-2	19315	32		7740-24	72914	154	
7609-37M5-2	02987	32	188	77473		KITS	
7609-37M5-2	02987	144	124	779854-1	19315	113E	37
7609-37M5-2	02987	145	174	779854-1	19315	113E	93
761024-1	19315	113E	271	779854-2	19315	113E	
76129	62983	125B		779854-3	19315	113E	
761465-1	19315	113E		779854-4	19315	113E	
76158	62983	125B	14	779854-5	19315	113E	
764194-4	19315	113E		779905-2	19315	113E	146
764196-1	19315	113E	231	779917-1	19315	113E	160
764196-1	19315	113E	239	779919-1	19315	113E	149
764196-10	19315	113E		782200-1	19315	113E	179
764196-11	19315	113E		782203-1	19315	113E	186
764196-12	19315	113E		782206-1	19315	113E	44
764196-13	19315	113E		782211-1	19315	113E	290
764196-14	19315	113E		782213-1	19315	113E	138
764196-15	19315	113E		782216-1	19315	113E	219
764196-16	19315	113E		782216-2	19315	113E	
764196-17	19315	113E		782216-3	19315	113E	
764196-18	19315	113E		782219-1	19315	113E	
764196-19	19315	113E		782229-1	19315	113E	172
764196-2	19315	113E		782229-10	19315	113E	
764196-3	19315	113E		782229-11	19315	113E	
764196-4	19315	113E		782229-12	19315	113E	
764196-5	19315	113E		782229-13	19315	113E	
764196-6	19315	113E		782229-14	19315	113E	
764196-7	19315	113E		782229-15	19315	113E	
764196-8	19315	113E		782229-16	19315	113E	
764196-9	19315	113E		782229-2	19315	113E	
766661-1	19315	113E		782229-3	19315	113E	
766663-1	19315	113E	293	782229-4	19315	113E	
766664-1	19315	113E	218	782229-5	19315	113E	
766665-1	19315	113E	35	782229-6	19315	113E	
766667-1	19315	113E	276	782229-7	19315	113E	
766668-1	19315	113E	280	782229-8	19315	113E	
766673-1	19315	113E	188	782229-9	19315	113E	
766673-1	19315	113E	193	782231-1	19315	113E	115
766674-1	19315	113E	182	782234-1	19315	113E	171
766674-1	19315	113E	196	782264-2	19315	113E	222
766674-2	19315	113E		782276-1	19315	113E	282
766674-3	19315	113E		785200-1	19315	113E	144
766674-4	19315	113E		785838-1	19315	113E	154
766674-5	19315	113E		78698-2	75477	123B	21
766675-1	19315	113E	184	79-012-062-0500		KITS	
766676-1	19315	113E		79-012-062-0500	72962	85B	34
766676-1	19315	113E	224	79-012-062-0500	72962	85B	6
766678-1	19315	113E		79-012-062-1000	72962	85B	3
766678-1	19315	113E	287	79-012-062-1000		KITS	
766682-1	19315	113E	21	79-018-062-0500	72962	96	66
766684-1	19315	113E	30	79-022-094-0625		KITS	
766686-2	19315	113E	164	79-028-125-0625		KITS	
766689-1	19315	113E	32	79-028-125-0750	07915	85B	12
766690-1	19315	113E	55	79-028-125-0750		KITS	
766695-7	19315	113E	10	79-028-125-1500	72962	85B	8
766697-1	19315	113E	8	79-028-125-1500		KITS	
766698-1	19315	113E	122	790628-1	19315	113E	
766699-1	19315	113E	48	790734-1	19315	113E	46
767657-1	19315	113E	242	790735-1	19315	113E	215
767886-1	19315	113E	114	790749-1	19315	113E	47
77R2XR1228W	06275	114E	32	790749-2	19315	113E	
77R2X1E		KITS		790749-3	19315	113E	
77R4LR1224E	43334	114E	61	790753-1	19315	113E	
77R4L1228VP17	43334	114J		790754-1	19315	113E	183

REFERENCE NUMBER	MFG CODE	FIG NUMBER	ITEM NUMBER	REFERENCE NUMBER	MFG CODE	FIG NUMBER	ITEM NUMBER
790763-1	19315	113E	209	800684	66640	E33	1
790766-1	19315	113E	210	801097	66640	E1	4
790767-1	19315	113E	177	801179	66640	E19	
790767-10	19315	113E		801205	66640	E34	8
790767-2	19315	113E		801206	66640	E33	3
790767-3	19315	113E		801243	66640	E34	1
790767-4	19315	113E		801501	66640	E38	
790767-5	19315	113E		801530	66640	E34	2
790767-6	19315	113E		801555	66640	E60	4
790767-7	19315	113E		801556	66640	E60	
790767-8	19315	113E		801614	66640	E49	
790767-9	19315	113E		801719	66640	E34	4
790772-1	19315	113E	197	801763	66640	E34	5
790773-1	19315	113E	142	801783	66640	E27	
790775-1	19315	113E	88	801789	66640	E34	6
790775-3	19315	113E		801793	66640	E34	7
790775-4	19315	113E		801864	66640	E35	1
790775-5	19315	113E		801890	66640	E35	2
7919	72914	113	17	801892	66640	E35	3
7919	72914	114	20	801926	66640	E63	4
793260-2	19315	113E	112	801928	66640	E35	4
79738		KITS		801930	66640	E28A	
8	81349	138	60	801930D1	66640	E42	2
8	81349	139	51	801930D2	66640	E42	3
				801950	33525	136	22
8DJ19ACV	24446	113		801950	33525	136	52
8DJ19ACV	24446	114		801951	33525	136	1
8DJ19ACV3	24446	113		801951	33525	136	23
8DJ19ACV3	24446	114		80198	66640	E35	5
8DJ19ACV3	24446	114P		801983	66640	E34	9
8DJ19ACV5	76119	113		801999	66640	E35	6
8DJ19ACV5	76119	114		802097	66640	E4	6
8DJ19ACV6	24446	113		802100	66640	E35	7
8DJ19ACV6	24446	114		802112	66640	E36	1
8DJ19GAC	24446	113		802158	66640	E36	2
8DJ19GAC	24446	114		802177	66640	E36	3
8DJ19GAE	24446	113		802206	66640	E87	
8DJ19GAE	24446	114		802403	66640	E36	5
8DJ19GAE5	24446	113		802565	66640	E29	
8DJ19GAE5	24446	114		802622	66640	E4	7
8DJ19GAF	24446	113		802690	66640	E5	2
8DJ19GAF	24446	114		802802	66640	E36	
8DJ19GAF6	24446	113		802820	66640	E37	2
8DJ19GAF6	24446	114		802821	66640	E37	
8DJ19GAF6	24446	114P		802822	66640	E37	
8DJ67FAB1	97424	113		802836	66640	E5	6
8DJ67FAB1	97424	114		802837	66640	E6	2
8DJ67FAB1	97424	114Q		802839	66640	E37	3
8DJ67FAC1	24446	113		802841	66640	E65	2
8DJ67FAC1	24446	114		802842	66640	E9	7
8DJ67FAC1	97424	114Q		802857	66640	E87	
800	83296	113B	51	802859	66640	E87	
800-515-8		KITS		802860	66640	E37	4
80000	13943	114		802861	66640	E87	
80000D	13943	114		802862	66640	E87	
800053	66640	E32	2	802863	66640	E87	
800065	66640	E32	3	802864	66640	E87	
800067	66640	E32		802867	66640	E37	5
800068	66640	E64	1	802901	66640	E37	6
800069	80044	E48	8	80292	66640	E37	
800070	66640	E32	4	802929	66640	E95	
800071	88402	E32	5	802980	66640	E12	2
800081	66640	E38	6	802981	66640	E38	1
800082	66640	E32	6	802993	66640	E38	2
800091	66640	E32	7	803047	66640	E38	3
800111	66640	E19	7	803078	66640	E87	
800130	66640	E32	8	803084	66640	E9	8
800154	66640	E38	7	803094	66640	E38	4
800207	66640	E34		803124	66640	E38	5
800523	66640	E38	8	803208	66640	E14	5
800641	66640	E1	3	803208D1	66640	E14	

REFERENCE NUMBER	MFG CODE	FIG NUMBER	ITEM NUMBER	REFERENCE NUMBER	MFG CODE	FIG NUMBER	ITEM NUMBER
803242	66640	E60	5	804749	66640	E6	3
803273	66640	E38	9	804791	66640	E6	4
803277	66640	E10	2	804854	66640	E6	5
803282	66640	E14	8	804885	66640	E6	6
80330		KITS		804964	66640	E3	
80330	19315	175A	21	804965	66640	E7	1
803310	66640	E11		804966	66640	E87	
803328	66640	E1	1	804967	66640	E87	
803358	66640	E13	7	805003	66640	E7	
803372	66640	E1	2	805092	66640	E7	4
803424	66640	E14	9	805093	66640	E7	
803429	66640	E62		805094	66640	E89	3
8034658-17	18876	BULK		805095	80254	E89	7
8034658-23	18876	140		805096	80254	E89	6
8034658-25	18876	BULK		805124	66640	E7	5
803523	66640	E13		805144	66640	E64	6
803524	66640	E13		805145	66640	E65	6
803526-1	66640	E1		805156	66640	E40	1
803526-2	66640	E1		805190	66640	E48	
803526-3	66640	E1		805284	66640	E49	2
803543	66640	E1	5	805304	66640	E7	
803544	66640	E1		805466	66640	E92	4
803544D2	66640	E1		805491	66640	E48	
803572	66640	E1	6	805504	66640	E48	7
803613	66640	E21	8	805506	66640	E70	1
80364	19975	131	94	805508	66640	E70	8
80364	19975	132	85	805528	66640	E56	3
803675	66640	E2	1	805530	66640	E64	
803676	66640	E2	2	805583	66640	E7	6
803679	66640	E2	3	805596	66640	E7	7
803720	66640	E2	4	805685	66640	E87	
803750	66640	E87		805687	66640	E7	8
803759	66640	E2	6	805691	66640	E7	
803790	66640	E3	1	805692	66640	E8	1
803793	66640	E3	2	805693	66640	E8	2
803830	66640	E3		805695	66640	E8	
803867	66640	E11		805707	66640	E60	1
803925	66640	E3		805708	66640	E63	7
803979	66640	E3	3	805709	66640	E8	3
803980	66640	E20	8	805710	66640	E70	
803981	15555	E3	4	805710-1	66640	E70	
803982	66640	E4	1	805711	66640	E8	4
803985	66640	E23	4	805714	66640	E63	5
804048	33525	136	53	805715	66640	E70	5
804051	66640	E4	3	805718	66640	E63	6
804051D2	66640	E4		805719	66640	E45	1
804081	66640	E23		805720	66640	E45	2
804087	66640	E4	4	805722	66640	E45	
804088	66640	E4	5	805723	66640	E45	6
804091	66640	E65		805724	66640	E8	5
80411	66640	E4	2	805726	66640	E8	6
804120	33525	136	6	805729	66640	E70	
804144	33525	136	27	805735-00	87991	30	18
804178	66640	E34		805735-00	87991	79	
804228	66640	E40	3	805735-00	87991	79	102
804328	66640	E4		805735-00	87991	79	109
804329	66640	E4		805735-00	87991	79	120
80433	66640	E5	1	805735-00	87991	79	127
804351	66640	E5		805735-00	87991	79	184
804357	66640	E5	3	805735-00	87991	79	186
804365	66640	E50	2	805735-00	87991	79	188
804366	66640	E50	1	805735-00	87991	79	190
804398	66640	E86	4	805735-00	87991	80	129
804439	66640	E5		805735-00	87991	81	114
804439-1	66640	E5	4	805773	66640	E66	2
804439-2	66640	E5	5	805774	66640	E9	1
804599	66640	E96	1	805781	66640	E12	
804640	66640	E6	1	805786	66640	E9	2
804640-9	66640	E6		805787	66640	E9	3
804640D1	66640	E6		805799	66640	E9	4
804671	66640	E94	3	805821	66640	E70	7

REFERENCE NUMBER	MFG CODE	FIG NUMBER	ITEM NUMBER	REFERENCE NUMBER	MFG CODE	FIG NUMBER	ITEM NUMBER
805831	66640	E42	5	806943	66640	E65	9
805866	66640	E9	5	806946	66640	E14	1
805878	66640	E66	3	806954	66640	E14	
805905	66640	E71	1	807007	66640	E14	2
805906	66640	E45	3	807034	66640	E72	
805913	66640	E9	6	807049	66640	E14	3
805947	66640	E65	8	807064	66640	E72	4
805965	66640	E48	5A	807103	66640	E14	4
				807112	66640	E64	7
806149	66640	E10	1	807113	66640	E63	3
806259	15555	E44	5	807115	66640	E50	3
806263	66640	E10	3	807119	66640	E72	5
806264	66640	E10	4	807130	66640	E14	
806346	66640	E10	5	807131	66640	E14	7
806347	66640	E10	6	807132	66640	E72	6
806348	66640	E71	2	807133	66640	E73	1
806349	66640	E37		807155	66640	E15	1
806350	66640	E87		807158	66640	E67	3
806356	66640	E71	3	807188	66640	E60	6
806376	66640	E11	1	8073	87915	175B	7
806392	66640	E56	4	807370	66640	E15	3
806395	66640	E56	5	807374	66640	E15	4
806419	66640	E46	1	807378	66640	E15	5
806420	66640	E46	2	807379	66640	E15	
806455	66640	E11	3	807380	66640	E15	
806456	66640	E11		807381	66640	E15	
806458	66640	E11		807382	66640	E15	
806459	66640	E11		807383	66640	E15	
806460	66640	E11		807384	66640	E15	
806462	66640	E11		807385	66640	E15	
806464	66640	E11		807389	66640	E15	6
806466	66640	E11		807390	66640	E60	
806467	66640	E11		807476	66640	E96	
806470	66640	E11		807482	66640	A5	
806533	66640	E11	4	807483	66640	E15	
806598	66640	E11	5	807487	66640	E73	2
806598D21	66640	E11		807488	66640	E73	3
806598D9	66640	E11		807521	66640	E23	2
806623	66640	E11	6	807524	66640	E96	
806624	66640	E11	7	807537	66640	E61	1
806625	66640	E71	4	807538	66640	E26	7
806639	66640	E12	1	807551	66640	E73	4
806643	66640	E71	5	807566	66640	E16	2
806643	91547	E66	6	807586	15555	E16	3
806645	66640	E72	1	807587	66640	E73	5
806682	66640	E32		807600	66640	E89	8
806699	66640	E12		807601	66640	E89	9
806733	66640	E66	8	807602	66640	E16	4
806747	66640	E12	3	807606	66640	E87	
806764	66640	E12	4	807607	66640	E87	
806765	66640	E12	5	807608	66640	E87	
806766	66640	E12		807610	66640	E16	5
806767	66640	E12		807611	66640	E74	1
806769	66640	E12	6	807612	66640	E29A	
806770	66640	E12	7	807614	66640	E29A	
806773	66640	E44	2	807615	66640	E63	
806794	66640	E66		807616	66640	E63	
806806	66640	E49	5	807617	66640	E63	9
806861	66640	E12	8	807618	66640	E63	11
806862	66640	E67	1	807619	66640	E63	12
806863	66640	E13	1	807620	66640	E63	10
806864	66640	E13	2	807622	66640	E16	
806866	66640	BULK		807624	66640	E16	
806867	66640	E13	3	807627	66640	E16	
806868	66640	E13		807628	66640	E16	
806870	15555	E13	4	807629	66640	E61	2
806891	66640	E43	4	807630	66640	E16	
806902	66640	E2		807635	66640	E15	
806904	66640	E13	5	807642	66640	E55	6
806915	66640	E13	6	807653	66640	E57	
806924	66640	E95	3	807659	66640	E29A	

REFERENCE NUMBER	MFG CODE	FIG NUMBER	ITEM NUMBER	REFERENCE NUMBER	MFG CODE	FIG NUMBER	ITEM NUMBER
807660	66640	E74	3	808008	66640	E68	3
807661	66640	E74		808048	66640	E17	4
807662	66640	E74	5	808060	66640	E96	5
807663	66640	E75		808062	66640	E76	5
807664	66640	E16	8	808063	66640	E76	
807665	66640	E16		808064	66640	E39	1
807666	66640	E16		808065	66640	E39	3
807700	66640	E17		808081	66640	E17	5
807706	66640	E49	6	808082	66640	E17	
807708	66640	E96		808124	66640	E18	1
807722	66640	E65	5	808124D2	66640	E18	
807743	66640	E17		808140	66640	E18	2
807755	66640	E95	5	808171	66640	E18	3
807777	66640	E29	7	8082		KITS	
807778	66640	E94	5	8082	87915	175B	24
807779	66640	E17	2	808255	66640	E18	4
807787	66640	E17	3	808257	66640	E67	6
807788	66640	E17		808274	66640	E16	
807789	66640	E17		808275	66640	E63	8
807826	66640	E67	4	808323	66640	E18	5
807827	66640	E64	8	808378	66640	E18	6
807828	66640	E65	1	808382	66640	E63	
807829	66640	E88	6	808385	66640	E77	
807830	66640	E46	6	808400D6	66640	E18	7
807831	66640	E19	8	808402	66640	E77	
807832	66640	E47	1	808403	66640	E77	
807833	66640	E47	2	808404	66640	E77	
807835	66640	E8		808405	66640	E77	
807836	66640	E47	3	808406	66640	E77	1
807905	66640	E75	3	808407	66640	E65	3
807911	66640	E53	4	808408	66640	E29A	
807912	66640	E53	5	808409	66640	E78	1
807913	66640	E67		808410	66640	E19	1
807914	66640	E52	1	808428	66640	E19	2
807915	66640	E53	6	808429	88402	E78	2
807917	66640	E52	6	808455	66640	E51	5
807918	66640	E53	2	808474	66640	E19	3
807919	66640	E54	1	808475	66640	E19	4
807920	66640	E68	1	808477	66640	E19	5
807921	66640	E75	4	808478	66640	E67	
807923	66640	E54	2	808481	66640	E19	6
807924	66640	E52	7	808552	66640	E78	3
807925	66640	E52	2	808568	66640	E20	1
807926	66640	E52	3	808575	66640	E47	4
807930	66640	E75	5	808580	66640	E29	
807931	66640	E48	9	808581	66640	E46	5
807932	66640	E75		808581D2	66640	E30A	
807933	66640	E68	2	808599	66640	E78	
807934	66640	E52	4	80861	66640	E78	
807935	66640	E52	5	808617	66640	E20	2
807936	66640	E54	3	808633	66640	E44	3
807937	66640	E54	4	808635	66640	E44	4
807938	66640	E76	1	808636	66640	E78	6
807939	66640	E4		808670	66640	E20	3
807940	66640	E53	1	808671	66640	E20	4
807941	66640	E29A		808691	66640	E30A	
807942	66640	E55	5	808703	66640	E50	5
807943	66640	E68		808703D1	66640	E50	
807944	66640	E54	5	808703D2	66640	E50	
807948	66640	E54	6	808703D3	66640	E50	
807949	66640	E55	1	808733	66640	E20	5
807950	66640	E53	3	808750	66640	E20	6
807951	66640	E76	2	808761	66640	E79	1
807952	66640	E55	2	808763	66640	E20	7
807953	66640	E55	3	808764	66640	E39	
807954	66640	E76	3	808767	66640	E57	7
807955	66640	E55	4	808768	66640	E57	9
807956	66640	E76	4	808769	66640	E57	
807958	66640	E17		808783	66640	E79	2
807958D19	66640	E17		808785	66640	E94	1
807969	66640	E15		808792	66640	E92	2

REFERENCE NUMBER	MFG CODE	FIG NUMBER	ITEM NUMBER	REFERENCE NUMBER	MFG CODE	FIG NUMBER	ITEM NUMBER
8088A		KITS		809543	66640	E22	6
8088A	87915	175B	11	809544	66640	E22	
808801	66640	E57	1	809545	66640	E22	
808802	66640	E39	4	809546	66640	E22	
808823	66640	E79	3	809547	66640	E22	
808877	66640	E21	1	809549	66640	E22	
808883	66640	E30	7	809550	66640	E22	
808884	66640	E21	2	809551	66640	E22	
				809552	66640	E22	
808885	66640	E87		809553	66640	E22	
808886	66640	E68	5	809555	66640	E22	
808887	66640	E60	2	809556	66640	E22	
808888	66640	E67	5	809557	66640	E22	
808889	66640	E87		809558	66640	E22	
808890	66640	E60	3	809559	66640	E22	
808891	66640	E21	3	809562	66640	E81	
808892	66640	E87					
808893	66640	E79	5	809575	66640	E93	5
808899	66640	E79		809593	66640	E93	
8089	87915	175B	12	809594	66640	E26	6
808904	66640	E21	4	809613	66640	E57	3
808905	66640	E21	5	809633	66640	E81	5
808906	66640	E21	6	809724	66640	E4	8
808907	66640	E31	5	809731	66640	E64	
808921	66640	E21	7	809732	66640	E64	
808929	66640	E41	5	809734	66640	E23	5
808930	66640	E41		809735	66640	E37	
808931	66640	E42	1	809737	66640	E23	
808932	66640	E41	3	809741	66640	E11	
808934	66640	E33	5	809742	66640	E81	
808935	66640	E80	1	809746	66640	E39	
808950	66640	E68	6	809749	66640	E64	
808999	66640	E80		809751	66640	E64	
809024	66640	E43	6	809754	66640	E82	1
809024D15	66640	E43		809757	66640	E50	4
809024D40	66640	E43		809758	66640	E50	6
809034	66640	E80	3	809762	66640	E51	2
809109	66640	E22	2	809777	66640	E51	1
809195	66640	E48	3	809778	66640	E51	3
809198	66640	E80	4	809780	66640	E24	1
809296	66640	E48	5	809781	66640	E24	2
809311	66640	E43	5	809782	66640	E51	4
809316	66640	E22	3	809783	66640	E82	2
809364	66640	E80	5	809833	66640	E61	3
809372	66640	E80	6	809834	66640	E24	3
809379	66640	E30A		809835	66640	E61	4
809379D19	66640	E46	4	809836	66640	E61	5
809403	66640	E15		809839	66640	E61	6
809425	66640	E81	1	809840	66640	E62	1
809452	66640	E57	2	809841	66640	E62	2
809454	66640	E57		809842	66640	E62	3
809480	66640	E93	3	809886	66640	E43	3
809481	66640	E93	1	809887	66640	E43	2
809482	66640	E19		809888	66640	E24	4
809483	66640	E19		809931	66640	E82	3
809484	66640	E19		809932	66640	E46	3
809485	66640	E39	5	809937	66640	E82	4
809486	66640	E39		809968	66640	E24	5
809487	66640	E81	2	809994	66640	E82	
809488	66640	E57	8	809996	66640	E82	
809527	66640	E22		810005	66640	E83	1
809528	66640	E22		810005D4	66640	E83	
809530	66640	E22		810017	66640	E83	
809532	66640	E22	5	810028D1	66640	E24	2
809533	66640	E22		810028D2	66640	E83	2
809535	66640	E22		810029	66640	E24	7
809536	66640	E81	3	810029D1	66640	E24	
809538	66640	E22		810029D2	66640	E24	
809539	66640	E22		810035	66640	E24	
809540	66640	E22		810037	66640	E24	8
809541	66640	E22		810041	66640	E25	1

REFERENCE NUMBER	MFG CODE	FIG NUMBER	ITEM NUMBER	REFERENCE NUMBER	MFG CODE	FIG NUMBER	ITEM NUMBER
810051	66640	E25	2	810428	66640	E58	
810052	66640	E25	3	810429	66640	E58	6
810054	66640	E25	4	810430	66640	E59	1
810056	66640	E25	5	810431	66640	E59	
810060	66640	E25	6	810432	66640	E59	
810061	66640	E25		810433	66640	E59	
81008	70210	74		810434	66640	E59	
810080	66640	E26	1	810435	66640	E59	
810081	66640	E26		810436	66640	E59	2
810082	66640	E26		810437	66640	E59	3
810083	66640	E26	2	810438	66640	E59	4
810084	66640	E26		810439	66640	E59	5
810085	66640	E26		810441	66640	E59	
810086	66640	E45	4	810450	66640	E59	6
810130	66640	E26	3	810455	66640	E41	
810138	66640	E26		810457	66640	E41	
810155	66640	E48	2	810522	66640	E33	4
810157	66640	E83		81071630030	89944	114B	17
810159	66640	E48	1	81132-4	89446	113	
810160	66640	E47	5	8115CON001	81996	A25	
810162	66640	E47	6	8115CON008	81996	A25	
810166	66640	E45	5	8115CON009-1	81996	E28	9
810167	66640	E45					
810168	66640	E45		81323	66640	E69	3
810174	66640	E26	4	814B	89944	109	
810180	66640	E26	5	81403	66640	E87	1
810185	66640	E27	1	81425		KITS	
810209	66640	E27	2	81426		KITS	
810215	66640	E27	3	81479	66640	E87	
810216	66640	E27	4	817845		KITS	
810230	66640	E31	6	819128-188		KITS	
810232	66640	E27	5	819356-1		KITS	
810258	66640	E40		8195-1	99643	32	209
810266	66640	E57	4	8195-1	99643	144	121
810280	66640	E66		8195-1	99643	145	184
810297	66640	E22	4	820-14	98625	123	59
810298	66640	E44	1	820-20	98625	78	
810301	66640	E65		82043	66640	E62	5
810304	66640	E27	6	82200	66640	E87	2
810305	66640	E95	1	822170	99551	175A	84
810308	66640	E27	7	82246	66640	E87	3
810310	66640	E27		82247	66640	E87	
810326	66640	E51	6	82267	66640	E84	4
810338	66640	E69		822710		KITS	
810350	66640	E69		823335		KITS	
810365	66640	E41	1	82361	66640	E68	7
810365D5	66640	E41		82371	66640	E63	1
810367	66640	E84		823869		KITS	
810370	66640	E84	2	823869	19315	175A	55
810371	66640	E84	3	824087		KITS	
810372	66640	E57	5	824087	19315	175A	50
810378	66640	E57	6	824168		KITS	
810379	66640	E57		824168	19315	175A	6
810380	66640	E86		8242	11599	175H	7
810380D3	66640	E86		82495-1	03496	123	37
810383	66640	E86	3	825865	19315	175A	79
810384	66640	E58	1	826298		KITS	
810389	66640	E58	2	82641	66640	E87	4
810392	66640	E86	5	82664	66640	E87	5
810393	66640	E86	6	82703	66640	E48	6
810402	66640	E86	7	82765	66640	E87	6
810403	66640	E86	8	83001-2	75361	79	162
810404	66640	E86		83001-2	75361	80	97
810408	66640	E58	3	83001-2	75361	81	80
810408D2	66640	E58		83039	62983	125B	10
810408D3	66640	E58		83052	66640	E87	
810408D36	66640	E58		831-4-5	82271	144	26
810409	66640	E58	4	831-4-5	82271	145	21
810410	66640	E40	6	83130	66640	E87	7
810423	66640	E86		83162	66640	E87	
810427	66640	E58	5	831933	19315	175A	101

REFERENCE NUMBER	MFG CODE	FIG NUMBER	ITEM NUMBER	REFERENCE NUMBER	MFG CODE	FIG NUMBER	ITEM NUMBER
831934	19315	175A	112	838190D3	66640	E88	
831935	19315	175A	32	838190D5	66640	E85	1
83220645002	89944	114L	25	839063	56232	113F	187
832657-3		KITS		839168	56232	113F	165
83269	66640	E62	6	839221	56232	113F	117
832732-2		KITS		839234		KITS	
83289300202	89944	114L	19	839234	19315	175A	
83345	66640	E42	6	839241		KITS	
833450D3	66640	E42		839241	19315	175A	91
833624		KITS		840472	33525	165	
83373	66640	E43	1	840505	33525	138	41
83409	66640	E87	8	840505	33525	139	33
83413	66640	E87	9	840542	33525	138	40
834140	19315	175A	85	840542	33525	139	32
83415	66640	E88	7	840648	33525	136	24
83417	66640	E88	1	840649	33525	136	2
83420	66640	E88	2	840810-1	19315	175A	113
83421	66640	E84	5	840810-2		KITS	
834223		KITS		840810-3		KITS	
834223	19315	175A	53	840810-4		KITS	
834223	19315	175A	87	841322	56232	113F	25
834224		KITS		841323	56232	113F	85
834224	19315	175A	54	841383		KITS	
834224	19315	175A	86	841383	99551	175A	71
834716		KITS		841385		KITS	
834756	19315	175A	93	841385	19315	175A	73
834758	19315	175A	52	841447		KITS	
834759	99551	175A	48	841447	19315	175A	72
834761	99551	175A	8	841448	19315	175A	74
835124	06840	175A	7	84173	32537	83A	8
835488	99551	175A	62	84246	66640	E88	5
83560	66640	E88	3	842657-2	19315	175A	12
835642		KITS		842659-2	99551	175A	69
835642	19315	175A	75	842711	19315	175A	
835643	19315	175A	76	842726		KITS	
835644	19315	175A	1	842726	19315	175A	42
835645	19315	175A	77	842735	19315	175A	41
835690	56232	113F	170	842826	06840	83	
835761	56232	113F	26	842826		KITS	
835829	56232	113F	104	842826	19315	175A	90
835831	56232	113F	89	84289320101	89944	114L	17
835862	19315	175A	81	842911	56232	113F	241
835865	19315	175A	67	84294	66640	E89	1
835898	19315	175A	68	842951-1	56232	113F	17
83599	19315	175A	83	843445		KITS	
836205	56232	113F	122	843445	19315	175A	64
836315	56232	113F	68	843446	19315	175A	66
836441	56232	113F	96	843449	19315	175A	63
836685	56232	113F	126	84356	66640	E69	4
836701	56232	113F	167	843721		KITS	
836735	56232	113F	120	844053	56232	113F	240
836927	56232	113F	191	844054	56232	113F	
836931	56232	113F	94	844146	19315	175A	78
836933	56232	113F	95	844187		KITS	
836938	56232	113F	173	844187	19315	175A	27
836948	19315	BULK		844222	19315	175A	80
837321		KITS		844453		KITS	
837321	19315	175A	9	844460	19315	175A	24
837346	19315	175A	59	84453	19315	11D	13
837438		KITS		84536	66640	E96	3
837764	19315	175A		845615		KITS	
837769		KITS		845615	19315	11D	36
837769	19315	175A	22	845615	19315	11D	64
837770	99551	175A		8465607P1	24446	BULK	
837771		KITS		8465867P1	24446	BULK	
837771	19315	175A	37	84757	66640	E44	6
837922		KITS		847699-1	56232	113F	253
837922	19315	175A	43	847799	19315	11D	23
83795	66640	E84	6	847799		KITS	
83802	66640	E30A		847800	19315	11D	24
83819	66640	E88	4	847800		KITS	

REFERENCE NUMBER	MFG CODE	FIG NUMBER	ITEM NUMBER	REFERENCE NUMBER	MFG CODE	FIG NUMBER	ITEM NUMBER
848044	19315	11D	32	859724-1	56232	113F	178
848049		KITS		859724-2	56232	113F	
84869	66640	E85	2	859724-3	56232	113F	
848977	19315	11D	22	859863	66640	211	21
848979	19315	11D	25	859864	66640	211	9
848979		KITS		859865	66640	211	8
849661		KITS		859866	66640	211	20
849879	56232	113F	5	861075		KITS	
84989	66640	E49	3	861904	19315	11D	6
850233	19315	175A	94	861925		KITS	
8504273	27462	84		861925	83298	11D	
85071630010	89944	114B		86223-24	75477	123B	11
85071630020	89944	114B	82	86223-24	75477	123B	17
85071630031	89944	114B		86224-6	75477	123B	4
85071630040	89944	114B		86246	62983	35A	11
85071630050	89944	114B		863720	56232	113F	206
85071630060	89944	114B		864610	19315	175A	
85071630070	89944	114B	96	864611	19315	175A	
85071630080	89944	114B	14	865D19	89944	114B	12
850987		KITS		865F133	89944	114D	22
850988	56232	113F	49	867445	19315	11D	18
850989	56232	113F	50	867447	19315	11D	62
851016	99551	175A	25	867488	19315	11D	1
8515665	24617	84		867605	19315	11D	65A
8517883	27462	84		87D13	66640	208	51
8518329	24617	84	21A	870011	66640	211	4
8521001	27462	83	14	870016	66640	211	
85220640030	89944	114L	30	870100	66640	211	11
852255		KITS		870101	66640	211	
8523534	24617	84	21	870102	66640	211	15
8523535	27462	84		870219	66640	211	3
85289320030	89944	114L		87029		KITS	
853026		KITS		870579	66640	211	14
853302		KITS		87071630010	89944	114B	
853774	19315	11D	7	87071630010	89944	114B	8
853774		KITS		870729	33525	138	
854305		KITS		870729-05	33525	138	39
854305	19315	175A	18	870729-05	33525	139	31
854829	19315	11D	67	87158		KITS	
854829		KITS		87159		KITS	
854832	19315	11D	70	87163		KITS	
854832	19315	11D	71	87164		KITS	
854832		KITS		87239-1-159		KITS	
854834	19315	11D	51	87465	70210	74	
854838	19315	11D	44	874911	19315	175A	4
854838		KITS		87628	70210	74	
854841	19315	11D	15	87643		KITS	
854841		KITS		87644		KITS	
854842	19315	11D	39	87645	70210	74	
854842		KITS		87658	70210	74	
854842	19315	11		87661	70210	74	
854849	19315	11D	26	8783476	19203	MSUP	
854852	19315	11D	31	8790670-1	19203	MSUP	
854852		KITS		8790672	19203	MSUP	
854853	19315	11D	11	87911		KITS	
855490	56232	113F	121	87911-1		KITS	
855960	19315	11D	4	879792		KITS	
855960		KITS		879792	19315	175A	45
857206	19315	11D	40	879805		KITS	
857206		KITS		879805	19315	175A	46
857467	66640	211	17	879951		KITS	
858902	19315	11D	55	881419	19315	175A	47
858902		KITS		883190	19315	175A	44
859313	66640	211	5	88339	70210	74	
859315	66640	211	18	88340	70210	74	63
859318	66640	211	19	88340	70210	75	76
859328	66640	211		88355	75477	123B	18
859331	66640	211	12	88355-160-1	70210	74	
859332	66640	211	16	883986		KITS	
85955	75477	83A	10	883986	19315	175A	106
859640	66640	211	13	884898	19315	175A	

REFERENCE NUMBER	MFG CODE	FIG NUMBER	ITEM NUMBER	REFERENCE NUMBER	MFG CODE	FIG NUMBER	ITEM NUMBER
886199	19315	175A		9011-1-15	70236	85B	19
886862	19315	11D		9011-1-18B	07915	85B	28
88921	75477	83A	6	9011-1-18B		KITS	
889267		KITS		9011-1-19	70236	85B	
89A06	58588	123A	28	9011-1-19	07915	KITS	
890105-4		KITS		9011-1-2	07915	85B	30
890112-18		KITS		9011-1-2		KITS	
890112-18	19315	11D	35	9011-1-20	70236	85B	
890112-18	19315	11D	65	9011-1-20	07915	KITS	
890121-3		KITS		9011-1-3	07915	85B	25
890121-3	19315	175A	65	9011-1-5	70236	85B	9
89021006136	24446	114P		9011-1-6	07915	85B	10
890376-1	19315	11D	60	9011-1-6		KITS	
890376-1		KITS		9011-1-7	07915	85B	13
890392-9		KITS		9011-1-7		KITS	
8905884G45	97424	114Q	5	9011-1-8	07915	85B	35
891279	66640	190A		9011-1-8	07915	85B	7
891809	66640	190		9011-1-8		KITS	
891810	66640	190		9011-1-9	07915	85B	4
891881	66640	190		9011-1-9		KITS	
891882	66640	190		9011-2-2	07915	85B	31
892333	66640	190		9011-3-1	07915	85B	1
892838	66640	190		9011-4-1	07915	85B	42
892839	66640	190		90145K12		KITS	
893258	66640	190		903J789-1	83843	11	
893259	66640	190		90310	03496	123	
893269	66640	190		90315A	66640	210	20
893270	66640	190		90438	62983	125B	3
893289	66640	190		90446	62983	125B	1
893290	66640	190		905-10	80049	31	35
893446	66640	190		9060184	18876	MSUP	
				90702	51596	113	
				90702	51596	114	
				907236K1		KITS	
8942884G35	24454	114Q	11	907237K1		KITS	
8948193P15	97424	114Q	6	907239K1		KITS	
8948701G2	97424	113		907666K1		KITS	
8948701G2	97424	114		907666K1	06848	214A	247
8948701G2	97424	114Q		909C213-1	83843	123B	50
8948903P1	97424	114P	17	910C232-1	79500	KITS	
89823		KITS		910C232-2	79500	KITS	
89823	19315	175A	100	9100	79500	120	27
9		KITS		9100	79500	120	72
9-196-650	81923	115	45	91158-8	66640	210	
9-2743-12	45681	78A	7	912333	62983	35A	
9-855-5	86768	32	58	912333	62983	KITS	
9-855-5	86768	32	99	912641	62983	35A	
9T39Y5	24446	132	106B	912641	62983	KITS	
9T39Y5	24446	138	49	913A1D		KITS	
90D31	66640	185	14	913A1D	87915	175B	17
900266	66640	E56	2	9147	11599	175	
9004	70133	117		9147	11599	175H	
9004	70133	118		916	45225	A1A	
9006	70236	54		91918	66640	210	
9007316	18876	MSUP		91954	66640	210	
900846K1		KITS		92168	89446	A1	5
900847K1		KITS		92239		KITS	
900848K1		KITS		92239	19315	175A	118
900849K1		KITS		923050	66640	E85	3
901	36378	BULK		923053	66640	E89	4
901004K12		KITS		923054	15555	E40	5
9011	70236	85	6	923057	66640	E85	4
9011	70236	85B		923058	66640	E89	5
9011-1-1	70236	85B	32	923058-10	66640	E89	
9011-1-10	70236	85B	15	923058-2	66640	E89	
9011-1-11	07915	85B	17	923067	66640	E90	1
9011-1-11		KITS		923067-1	66640	E90	2
9011-1-12	70236	85B	18	923067-2	66640	E90	3
9011-1-13	70236	85B	40	923070D5	66640	E90	
9011-1-14	07915	85B	37	923071	66640	E90	4
9011-1-14		KITS		923071D7	66640	E90	

REFERENCE NUMBER	MFG CODE	FIG NUMBER	ITEM NUMBER	REFERENCE NUMBER	MFG CODE	FIG NUMBER	ITEM NUMBER
923073	66640	E90	5	9420415	73842	84A	9
923073D3	66640	E90		9420416	73842	84A	26
923073D4	66640	E90		9430115	73842	84A	27
923073D6	66640	E90		9430115	73842	84B	3
923073D7	66640	E90		9430115	73842	84B	4
923087	66640	E90	6	9430117	81039	82	
923125	66640	E90	7	9430118	73842	82	
923129	66640	E90	8	9430118	73842	84B	
923130	66640	E90		9430246	01297	82	31
923131	66640	E90		9430246	73842	84A	28
923136	66640	E90	9	9430246	73842	84B	1
923152	66640	E91	1	9430267	73842	82	32
923163	66640	E48	6A	9430267	73842	83	34
923208	66640	E91	2	9430267	73842	84	14
923214	66640	E91	3	9430267	73842	84A	
923223	66640	E91		94480-2	78570	210	39
923225	66640	E85	5	944893	72071	E41	
923225-1	66640	E85		95		K4	
923231	66640	E91	4	95	75165	56	8
923238	66640	E85	6	95	75165	BULK	
923239	66640	E68	4	95-33856	73842	162B	12
923243	66640	E91	5	95S	50941	A25	3
923244	66640	E91		9500266	73842	KITS	
923245	66640	E91		9500266	73842	162A	
923275	66640	E56	1	9510378	73842	84A	12
923276	66640	E92	1	9510378	73842	84B	14
923277	66640	E69	5	9510853	73842	84A	10
923278	66640	E69		9510853	73842	84B	12
923410	66640	E85	7	9510894	73842	84A	6
923484	66640	E92	3	9510894	73842	84B	9
923536	66640	E49		9510894	73842	162A	3
923541	66640	E69		9510895		KITS	
923557	66640	E42		9510895	73842	84A	7
923604	66640	E92	5	9510895	73842	84B	10
925101	62983	125B		9510895	73842	162A	7
92517-73		KITS		9510923	73842	84A	13
92587-137		KITS		9510923	73842	84B	15
92650-19		KITS		9511002	73842	84A	11
92650-9		KITS		9511002	73842	84B	13
92650-9	19315	11D		9511157	73842	84A	23
93D18	66640	208	16	9511157	73842	84B	25
93001-3		KITS		9511157	73842	162A	18
93144	62983	35A	23	9520136	73842	162B	
93147	62983	35A	14	9520202	73842	165	
93148	62983	35A	1	9520218	73842	162B	9
933585	33525	122	32	9520647G	73842	162B	6
933585	33525	122	35	9520648G	73842	162B	1
94-27328CTYPEC13B	80049	109		9521374	73842	84A	14
940-129	89944	114A	73	9521374	73842	84B	16
940-129	89944	114L	70	9521603	73842	162A	4
940-71	89944	114A	63	9521604		KITS	
940-71	89944	114L	60	9521604	73842	162A	2
940-80	89944	114A	82	9521608	73842	162B	2
940-80	89944	114L	80	9521739		84B	17
940-901	89944	114A	36	9521745	73842	84B	2
940-901	89944	114A	59	9522145	73842	162A	
940-915	89944	114A	67	9522159		KITS	
940-931	89944	114A	76	9522159	73842	162A	25
940-931	89944	114L		9522164	73842	162A	
940-932	89944	114A	80	9522728		KITS	
940U03	89944	114		95235	62983	35	
940U03D	89944	114		95235	62983	35A	5
94000-1		KITS		95236	62983	35A	33
9400003	73842	84A		95237	62983	35A	15
9400003	73842	KITS		95245		KITS	
94003		KITS		9526147	73842	BULK	
94003-4		KITS		9526147	73842	162B	11
94003-5		KITS		9530992	73842	162B	4
9420389	73842	84A	15	9530993	73842	162A	1
9420392		KITS		9540666	73842	162A	23
9420392	73842	84A	5	9555A	74144	140	2

REFERENCE NUMBER	MFG CODE	FIG NUMBER	ITEM NUMBER	REFERENCE NUMBER	MFG CODE	FIG NUMBER	ITEM NUMBER
9555A	74144	140	7				
9555A	74144	141	4				
95808		KITS					
95908		KITS					
96-290380-137	58854	BULK					
96450	65092	109					
96594		KITS					
96609		KITS					
96621		KITS					
96623		KITS					
97-180-18	02660	122					
97-5107-14S7S	02660	126	17				
97D5	66640	189					
97D9	66640	189	13				
97503B	60038	27					
987-10-031	89944	114					
987-23-031	89944	114					
9883360G5	24446	114P	80				
9886421P1	97424	114Q	4				
9893360G4	24446	114Q	55				
9893530G1	97424	114Q	70				
9893530G2	97424	114Q	28				
9893723P3	24454	114Q	78				
9893884P1	97424	114P	79				
9893884P1	97424	114Q	54				
9893886G1	97424	114P	81				
9893886G1	97424	114Q	57				
99-1327		KITS					
99-2569	77200	84	42				
99-2570	77200	84	40				
995-61004-0000	96906	68	10				